Presented at the Fifth Symposium
on Engineering Problems of Fusion
Research, Princeton, New Jersey,
November 6-9, 1973

LBL-2425
c.2

NEUTRAL-BEAM RESEARCH AND DEVELOPMENT AT LBL, BERKELEY

W. R. Baker, K. H. Berkner, W. S. Cooper, K. W. Ehlers,
W. B. Kunkel, R. V. Pyle and J. W. Stearns

November 1973

Prepared for the U. S. Atomic Energy Commission
under Contract W-7405-ENG-48

TWO-WEEK LOAN COPY

This is a Library Circulating Copy which may be borrowed for two weeks. For a personal retention copy, call Tech. Info. Division, Ext. 5545

LAWRENCE BERKELEY LABORATORY
UNIVERSITY OF CALIFORNIA
BERKELEY

LBL-2425
c.2

DISCLAIMER

This document was prepared as an account of work sponsored by the United States Government. While this document is believed to contain correct information, neither the United States Government nor any agency thereof, nor the Regents of the University of California, nor any of their employees, makes any warranty, express or implied, or assumes any legal responsibility for the accuracy, completeness, or usefulness of any information, apparatus, product, or process disclosed, or represents that its use would not infringe privately owned rights. Reference herein to any specific commercial product, process, or service by its trade name, trademark, manufacturer, or otherwise, does not necessarily constitute or imply its endorsement, recommendation, or favoring by the United States Government or any agency thereof, or the Regents of the University of California. The views and opinions of authors expressed herein do not necessarily state or reflect those of the United States Government or any agency thereof or the Regents of the University of California.

NEUTRAL-BEAM RESEARCH AND DEVELOPMENT AT LBL, BERKELEY

W. R. Baker, K. H. Berkner, W. S. Cooper, K. W. Ehlers, W. B. Kunkel, R. V. Pyle, and J. W. Stearns

Lawrence Berkeley Laboratory
University of California
Berkeley, California 94720

November 1973

The neutral-beam research and development effort at LLL has been concerned mainly with design, construction, and testing of ion sources needed in present and planned experiments, chiefly at LLL. Development of techniques for producing reactor-type neutral beam systems with higher voltage, current, and duty cycle proceeds as resources permit. An important part of this program is the attempt to increase the physics understanding and technology needed for the design of beams with precisely controlled trajectories, e.g., converging beams.

Construction Projects

Summary

Examples of some neutral beam systems for the LLL mirror program are given in Table I. We have built a number of sources satisfying the first requirements, 10 A into $\pm 0.9^{\circ} \times \pm 1.8^{\circ}$ at 20 keV. The next two sources are built, but not completely tested. The 50 A neutral source, our main project at the moment, is the only one that we describe in any detail here.

50 Ampere Neutral Source

About 600 A (equivalent) of neutral deuterium atoms and molecules, with a maximum energy of 20 keV and a pulse length up to 10 msec are required for the 2XIIB experiment. The angular dimensions of the plasma target are about $\pm 0.9^{\circ} \times \pm 1.8^{\circ}$, with the sources about 3.3 m from the plasma. We have chosen a modular approach, with each module capable of delivering 50 A to the target. Different modules may operate at different energies and may inject at somewhat different angles with respect to the 2XII axis, as a means of investigating possible plasma instabilities. (A higher-current source under development at LLL is discussed in the following paper.[1]) The basic design is similar to that of 10 A sources described previously.[2] The system can be divided into four parts: the plasma ion source, the acceleration assembly, the neutralizer, and the electronics.

Plasma Source. A plasma from which 0.5 A/cm^2 of deuterium ions can be extracted over a 7 x 35 cm area is generated by a high-current arc discharge drawn from 86 hot tungsten filaments 0.5 mm in diameter and 10.8 cm long. Each of these carries up to 25 A at 12 V. A hot-cathode discharge operating without applied magnetic fields was chosen because it is capable of repeatable, noise-free operation. A schematic cross section of the source is shown in Fig. 1. The arc current flows between the filaments and an anode "ring" close to the extraction electrodes; this configuration gives plasma uniformity of ±10% over the extraction region. A photograph of the plasma chamber is shown in Fig. 2. Arc currents of 4000 A are supplied by a pulse line. Arc voltages vary from about 25 to 70 V, depending on the levels of arc current, gas flow, and filament heat. Variations in these parameters allow us to have some control over the ion species composition, but we have little information about this now. Measurements made with a smaller plasma source ("10 A") under typical operating conditions at 20 keV showed ion compositions of 75% D^+, 18% D_2^+, and 7% D_3^+ in the extracted beam.

In the proposed 2XII operation it is desirable to minimize the slow neutral gas from the source before and during the beam pulse. The gas is introduced through a pulsed valve 1.5 sec after the filaments are turned on, followed 2 msec later by the arc pulse, with extraction 2 msec after the arc turns on. The gas efficiency, i.e., the fraction of the gas nuclei that are ionized and extracted, is 25% to 40%, depending on the arc conditions chosen by the operator.

Extractor Assembly. The extractor was designed with the aid of a digital computer program that determines the trajectories of particles from an emitting surface through a set of electrodes, taking into account the space charge of the beam. The iterative design procedure was carried out until the current density over the emitting surface was constant to better than ±5% and the ion trajectories at the exit of the extractor were almost parallel, typically within $\pm 1^{\circ}$. In the calculations, only the beam's space charge is considered; the downstream plasma surface has been assumed to be flat, and the ions are assumed to start from rest.

The extractor is a multiple-aperture accel-decel design employing slots; the configuration is shown approximately in Fig. 3. (The final computer-optimized design is slightly different and includes bevelled corners on the center electrode.) Each slot in the beam-forming electrode is 2 mm wide and 7 cm long. Slots, rather than circular holes, were chosen for several reasons: higher transparency, better beam quality in the direction parallel to the slots, and the possibility of expansion in one dimension under a heat load without buckling or destroying the symmetry, ease of cooling in future electrodes (the present electrodes are not cooled).

The assembled extractor is shown in Fig. 4. Each electrode consists of five adjacent copper grids, each containing 21 slots forming a square 7 x 7 cm array. The grids are pinned to stainless steel plates; the position of each grid and each slot in a grid must be accurate to within 0.025 mm to provide the desired control of the beam trajectories. We find that a translation of the beam-forming electrode (next to the plasma) by 0.1 mm in a direction perpendicular to the long axis of the slot, will change the angle at which the beam emerges, by 3.5°. We have used this effect to converge the beams emerging from the five grids of the extractor: the outer two grids are displaced 0.065 mm toward the center of the array, and the intermediate grids are displaced 0.03 mm toward the center. Although advantageous for steering, this effect means that vary careful construction and alignment of the electrodes are mandatory, since mechanical imperfections and misalignments in the extractor assembly result in broadening of the beams.

The insulators are made of NEMA G-10 epoxy-glass laminate.

Electronics. Power supplies and control circuits are designed so that each "50 A" unit can be operated and protected separately against damaging electrical breakdowns. We find that small, but non-negligible

amounts of damage are caused by sparks that deposit tens of joules in a localized spot; consequently, we require that power be removed in about 10 μsec if a fault is detected.

The pulse lengths are short enough and the repetition rate low enough (about once a minute) that electrolytic capacitor energy storage is the most economical. A schematic block diagram of the power supply system is shown in Fig. 5.

The filament supply is a 12-phase rectifier supplying up to 2000 A at 0-15 V. Voltage control is by means of an 82% buck-boost IVR.

The arc supply is a 0-150 V, 4000 A, 0.035 Ω Z_0, electrolytic pulse line. An ignitron switch and crowbar system adjusts the pulse length actually delivered to the source to 0-12 msec and can stop the arc current in case of a fault condition.

The 90 μF, 35 kV accel energy storage module is made of 1000 μF, 450 V electrolytic capacitors and has an internal impedance of 6 Ω. The accelerating voltage regulator and interrupt circuit uses an Eimac 4CX35000 screen grid tube, and provides 0-20 kV, 80 A for 0-10 msec.

Decel power from a 125 μF, 6.4 kV capacitor bank is controlled by a 0-5 kV, 20 A circuit using an Eimac 4CX15000 tube. This supply is slaved to the accel supply. In the event that an electrical fault is sensed from a current signal, the current can be interrupted for an adjustable time, usually about 200 μsec, after which power can be applied to the extractor again. At a higher overload current, current ignitrons crowbar the energy storage modules; this is a backup system to protect both the grids and the 4CX35000.

Neutralizer. In the energy range covered by this source 80-90% of the accelerated beam power is converted to neutral beam power in a D_2 gas neutralizer about 5 x 10^{15} molecules/cm^2 thick. The actual thickness and efficiency in a given CTR experiment will be a compromise determined by geometry, pumping capability, etc. In our tests, the neutralizer is an 80 cm long region of reduced cross sectional area following the extractor, in which neutral gas coming out of the extractor maintains an average pressure of a few mTorr.

Initial Operation. Testing and debugging of this neutral beam source have just started. In very preliminary operation, 70 A have been extracted at 19.5 keV (1.4 MW) in 4 msec pulses. About 50% of the power was in the 2XII solid angle, and about 70% of the power (53 A equivalent) was delivered to a 20 x 40 cm calorimeter 2.9 m from the source. The neutral fraction of the beam has not been measured yet; from past experience we expect about 85% of the extracted beam power to be in the neutral component.

Operating parameters for the initial 19.5 keV, 70 A, unoptimized extraction were:

Filament power	2150 A at 12 V	= 0.026 MW
Arc power	3000 A at 50 V	= 0.15 MW
Accel power supply	70 A at 19.5 kV	= 1.36 MW

Gas efficiency: 38% (25 mTorr-liters/msec) gas flow during the beam pulse, with the assumption that the composition of the beam is similar to that found for the 10 A sources, where the ion beam at the extractor is about 75% D^+, 18% D_2^+, and 7% D_3^+; the neutral components emerging from the 10 A neutralizer are roughly 50% full-energy, 25% half-energy, and 25% one-third energy D^0 atoms.

10 Ampere Neutral Sources

The mechanical design and the operation of these 20 keV, 10 A (equivalent), 30 msec pulse length D^0 sources are described in some detail in Ref. 2. We have built five of these sources for use at LLL and PPL, and for testing new extractor electrode designs at LBL. The electrical equipment used with these sources (on our Test Stand No. 1) consists of:

Accel and Decel Supplies. The accel power supply is a 1% regulated, 0-20 kV, 20 A, 30 msec system powered by a pulse line. Its voltage can be programmed with a 20 μsec response time. The decel supply is similar to that described in the 50 A section; however, it is capable of 9 kV and 4 A.

Arc Supply. The arc supply is a 12-phase, low ripple, 0.1 Ω Z rectifier system controlled by an electronic contactor. It is capable of supplying 2000 A at 0-100 V for 0.1 sec, and can be crowbarred with a SCR to protect components.

Filament Supply. The filament supply can provide 1000 A at 1.5-15 V from a 12-phase rectifier system. As in the arc supply, voltage control is by means of an 82% buck-boost I.V.R.

Low-Voltage, 10 sec BBII Source

The specifications set by the user are 10 sec pulses of neutral hydrogen atoms and molecules into BBII, with equivalent currents of 0.5 A at 2 keV, 1 A at 3 keV, and 2 A at 5 keV. Based on operating experience with a small dc source, and guided by computer calculations, this source is designed for extraction at 11 kV and deceleration to the desired final energy. The physical size is similar to that of the 10 A sources; however, the essentially dc operation requires very different design of the plasma source and the extractor. We are not able to predict how close this source will come to meeting the specifications and may have to enlarge the extraction area somewhat after obtaining operating experience.

Plasma Source. If the interelectrode spacing of the 10 A and 50 A sources is retained, then 0.25 A of hydrogen ions per cm^2 of plasma will be extracted at 11 kV. To provide the necessary plasma density for 10 sec and keep the density modulation below ±10% (required to avoid degradation of the beam optics), the filament operation is changed as follows: The filaments are operated with ac; this is required because the filament temperature in the 10 A and 50 A sources is not in steady state--the positive end of the filament cools and the negative end becomes progressively hotter. AC operation at 60 Hz with hairpin filaments resulted in ±30% modulation of the plasma. However, if the filaments are of the same length, but wound into spirals, the density modulation is less than ±10%. It is also necessary to reduce the arc current drawn from each filament for dc operation. About 10 A of arc current are drawn from each filament in this source.

Extractor. The electrode configuration for efficient high-decel operation must be somewhat different from that of the 10 A and 50 A sources, where decel voltages of 5-10% of the accel voltage are used. We have compared calculated and experimental high-decel performance, and find qualitative but not quantitative agreement. In particular, the beam width perpendicu-

lar to the slots is considerably worse than we had expected. This may be due to known inadequacies in the computational program used in these calculations; better calculations are expected shortly, using a new program (see below).

The heat load on the "dc source" electrodes also must be dealt with in a different way. One possibility is to prevent the temperature from rising; water-cooled slotted grids are currently being tested. It may be satisfactory and simpler to let the temperature of the electrode structure rise during the pulse, perhaps to radiation equilibrium. Some experimenting has been done with tungsten ribbons and rods, but this is only a beginning. We have shown that properly designed carbon electrodes can maintain mechanical tolerances during a 10 sec plasma pulse; however, no extraction experiments have been possible yet. If a hot carbon extractor provides suitable beam quality, we will protect the surface with a heavy metal, e.g., W or Re laid down by chemical vapor deposition; several 10 A grids have been made in this way.

Power Supplies. Power supplies for this source are similar to those on Test Stand No. 1, but because of the longer pulse time they are powered from our 60 Hz, 480 V, 4 MW bus. The accel supply is 0-20 kV, 10 A and the decel supply is 0-10 kV, 3A. The arc supply can provide up to 2000 A at 100 V and the filament supply 1500 A, 1.5-15 V, either ac or dc.

The accel and decel supplies are capable of much more current in a pulsed mode, and the accel supply can be raised to 40 kV by changing the high-voltage rectifier and transformers.

General Development Topics

Computational Ion Extractor Optimization

The program previously used, although very useful, is not adequate for the present tasks. A new program, WOLF, has been written for calculating and optimizing ion extraction with more realistic input data and physics. The program treats symmetric or asymmetric two-dimensional extractors (slots), with no magnetic field. Ion flow with space charge is calculated by solving the equations of motion and Poisson's equation iteratively on a flexible triangular mesh attached to the boundaries. The emitting surface is assumed to be a flexible surface at the position of the plasma sheath. Ions are assumed to arrive at this surface with a distribution in directed velocities to simulate an ion wind; a finite ion temperature and the effects of electrons in the sheath are included. The magnitude of the electric field E_0 on this surface must also be specified. The ion velocity distribution and E_0 must be assumed or derived from measurements of the plasma properties. The ion current density j_+ can be specified or treated as a variable. WOLF then varies the shape of the emitting surface (and j_+, if desired) to obtain $E = E_0$ on this surface, in a least-squares sense; this is equivalent to specifying j_+ = constant on the surface, and determines the shape that the plasma sheath will assume in the vicinity of the extractor electrode. In addition, the program can vary the shape and potential of selected electrodes to minimize the beam divergence. This program is the first step toward a model containing enough physics of the plasma and of the extraction process to accurately predict the performance of a given extractor, and then to optimize the extractor design for a given task. WOLF was written by K. Halbach and S. B. Magyary in the HILAC group.

Some detailed measurements of plasma parameters in an operating ion source have been obtained to provide input data.

Mechanical Tolerances and Stability

The mechanical tolerances that must be held (in a variable temperature environment) have been mentioned; we continue to look for better ways to manufacture and position electrode structures. Alternatively, it may be possible to design new kinds of sources that relax tolerances without sacrificing performance.

Geometric Focusing of Beams

We have already discussed how geometric displacement of the first grid is used to converge beams emanating from different parts of long extractor arrays, as in the 50 A extractor.

We have also achieved focusing in the direction parallel to the slots by curving the rails in the first and second grids (the function of the third grid is to prevent electrons from streaming into the source; it has little effect on beam optics for low-decel operation and need not be curved under these conditions). A set of grids with a 2 meter radius curvature reduced the spread of a 15 keV deuterium beam from $\pm 0.95^\circ$ to $\pm 0.6^\circ$ at 2 meters. This is consistent with the intrinsic beam spread that we have deduced by other means; an understanding of the causes of this intrinsic spread and its elimination should allow us to focus to even narrower lines by this technique.

Staging to Higher Beam Energy

We are attempting to raise the energy of a 10 A source to 40 keV by adding an additional electrode to give two 20-kV gaps plus a decel gap. This extractor has operated satisfactorily with a total voltage of 20 kV, the limit of our power supply. Assuming that operation of 40 kV also is satisfactory, additional acceleration stages will be tried.

Plasma Source Efficiency

25% to 50% of the deuterium nuclei that go into the source as D_2 are accelerated. One way to increase the efficiency is to add an impedance between the arc chamber and the neutralizer cell, thereby allowing the required pressure in the plasma source to be maintained with lower gas flow. We have raised the pumping impedance and reduced the gas flow about a factor of two in a preliminary experiment by placing metal sheets several centimeters long (in the beam direction) between the beams emerging from the individual slots in the third electrode (in fact, the array of metal sheets can be the third electrode). Use of this technique requires the precise control of beam trajectories mentioned earlier. An additional advantage will be the beam collimation at the ion source, i.e., far from the hot plasma region.

Electrical and gas efficiency can be improved by making more efficient use of electrons in the arc, e.g., by reflecting fast electrons at the walls. We have tried to do this by biasing walls more negatively, but abandoned this approach because of the formation of cathode spots. Another possibility is to use magnetic cusps at the walls, following the developments of the UCLA group.[3] We have not yet had any spectacular success with an attempt along these lines.

Impurities

A systematic search to identify and reduce

impurities in the neutral beam is in progress.

Negative Ion Sources

Some work on direct extraction of H^- ions and conversion to H^0 in plasma targets is planned. This will complement the double electron capture approach pursued at LLL by Hamilton and Osher.[4]

Remarks

Much progress in neutral beam development has been made in the last few years.[5,6] Our success can be ascribed primarily to increased attention to the relevant problems of ion-optics and beam formation, coupled with a fresh attack on finding a scalable and relatively easily understandable source discharge. Injectors for the next round of fusion experiments probably can be designed and built by straightforward (but non-trivial) extensions of present techniques. After that we expect increasing emphasis on beam quality, gas and electrical efficiency, control of ion species and impurities, ease of operation and maintenance, and cost. Satisfying the operational and economic requirements of injectors for fusion reactors may be difficult and expensive.

Acknowledgments

We gratefully acknowledge electronic design and operation by M. L. Fitzgerald, J. E. Galvin, E. B. Hewitt, and V. J. Honey, mechanical design by S. M. Hibbs (LLL), and mechanical design and construction by L. A. Biagi, H. A. Hughes, and members of their groups.

References

1. T. J. Duffy, A 200 Ampere Neutral Beam Source, in Proceedings of the Fifth Symposium on Engineering Problems of Fusion Research, Princeton, N. J., Nov. 6-9, 1973.

2. K. W. Ehlers, W. R. Baker, K. H. Berkner, W. S. Cooper, W. B. Kunkel, R. V. Pyle, and J. S. Stearns, in Proceedings of the 12th Symposium on Electron, Ion, and Laser Beam Technology, Cambridge, MA, May 21-23, 1973, J. Vac. Sci. Technol., Nov.-Dec. 1973.

3. K. N. Leung and K. R. MacKenzie, Bull. Am. Phys. Soc. 18, 1295 (1973).

4. J. E. Osher, F. G. Gordon, and G. W. Hamilton, Production of Intense Negative Ion Beams, in Proceedings of the Second International Conference on Ion Sources, Vienna, Austria, Sept. 11-15, 1972, p. 876.

5. Also see J. E. Osher, Intense Ion and Neutral Beams with Low Energy, Vienna, p. 234.

6. Also see L. D. Stewart, J. C. Ezell, W. Halchin, T. C. Jernigan, O. B. Morgan, W. L. Stirling, and R. E. Wright, in Proceedings of the Fifth Symposium on Engineering Problems of Fusion Research, Princeton, N. J., Nov. 6-9, 1973).

Table I. Construction activities.

Fig. 1. Schematic cross section of the 50A source; plasma source on the left, extractor assembly on the right.

Fig. 2. Interior of the plasma-arc chamber, showing some of the filaments. The anode is at the front.

Fig. 3. Example of a computer-optimized extractor-elctrode system.

Fig. 4. Assembled extractor. The set of five grids, each with 21 slots, faces the plasma source.

Fig. 5. Schematic diagram of the "50 A" power supply system.

Table I.

Major LBL Neutral Beam Activities

Expt.	Nominal Max. Voltage	Nominal Pulse Length	Gas	Target Angular Dimensions	Equiv. Neutral Current Into Plasma	Total Extracted Ion Current	Total Neutral Equiv. Current	Status
2×II	20 kV	30ms	D_2	±0.9°×±1.8°	~10A	~16A	~18A	5 Built & Tested
BBII	5 kV	10 S.	H_2	±1.3°×±1.3°	~2A	~5A	~6A	Partly built, plasma tested
2×II	20kV	10ms.	D_2	±0.9°×±1.8°	~50A	~80A	~90A	Built, under test

XBL 7310-4410

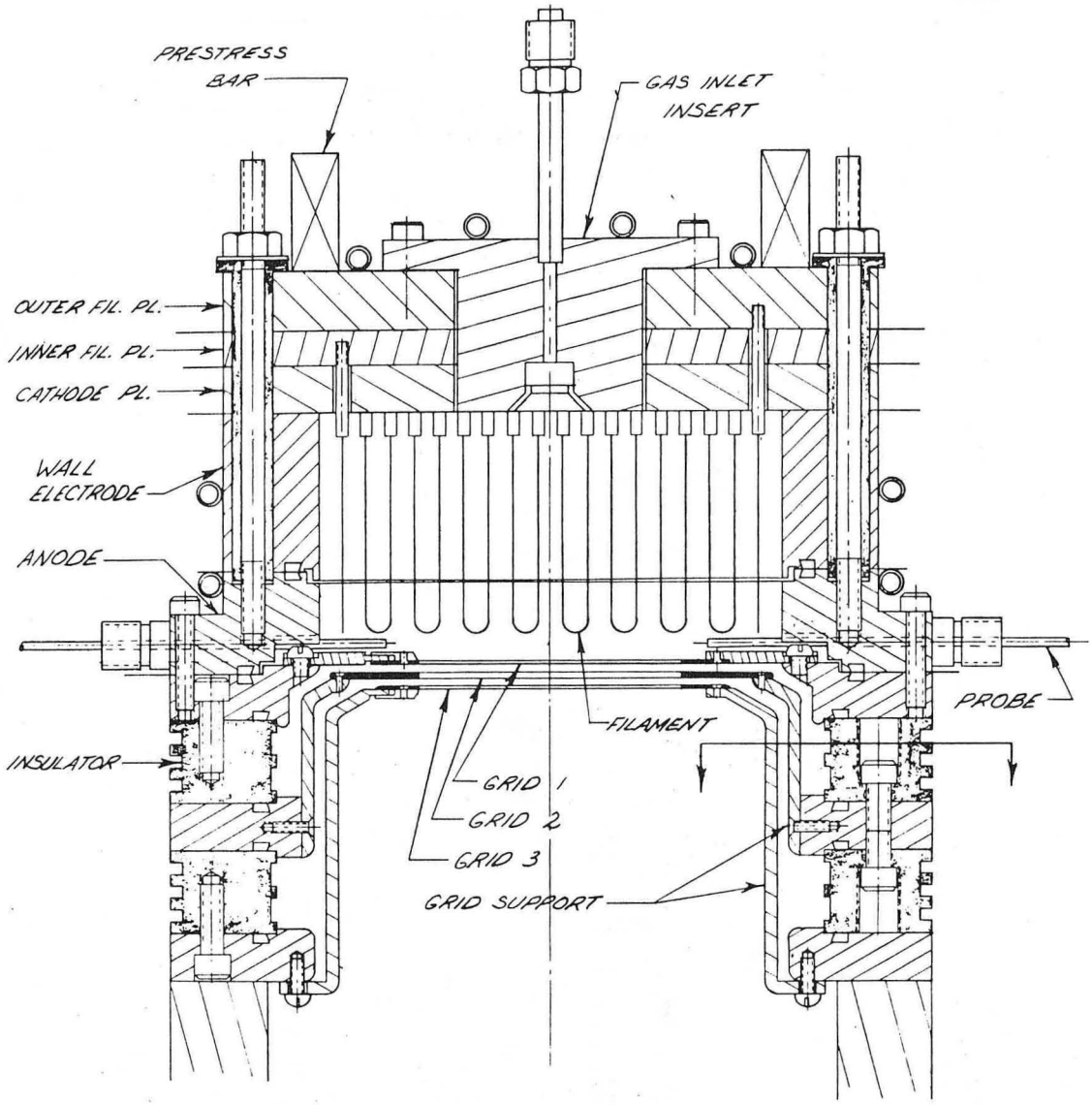

50-AMPERE ION SOURCE

MK II 4/4/73

XBL 7310-1357

Fig. 1.

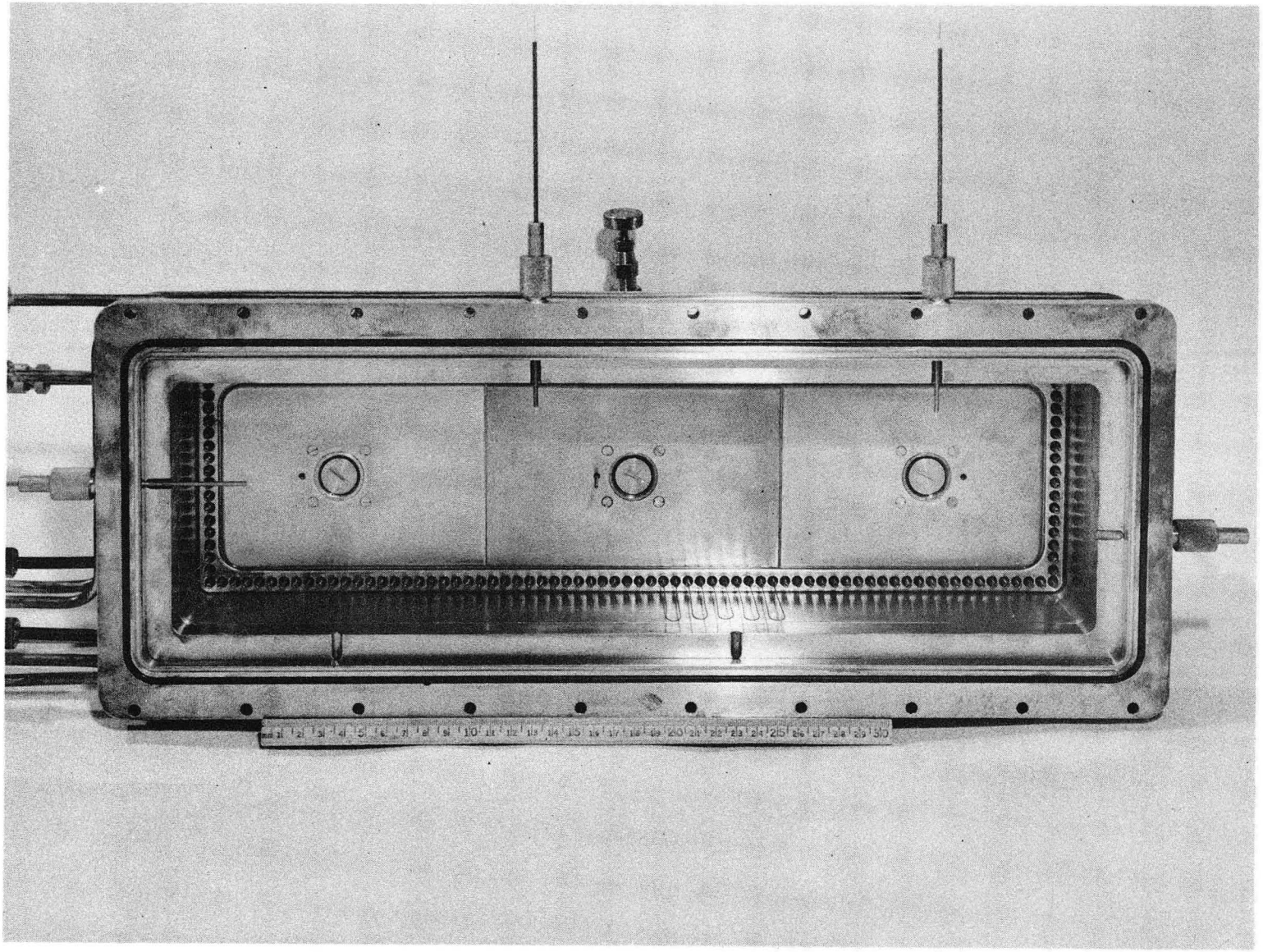

Fig. 2. XBB735-3239

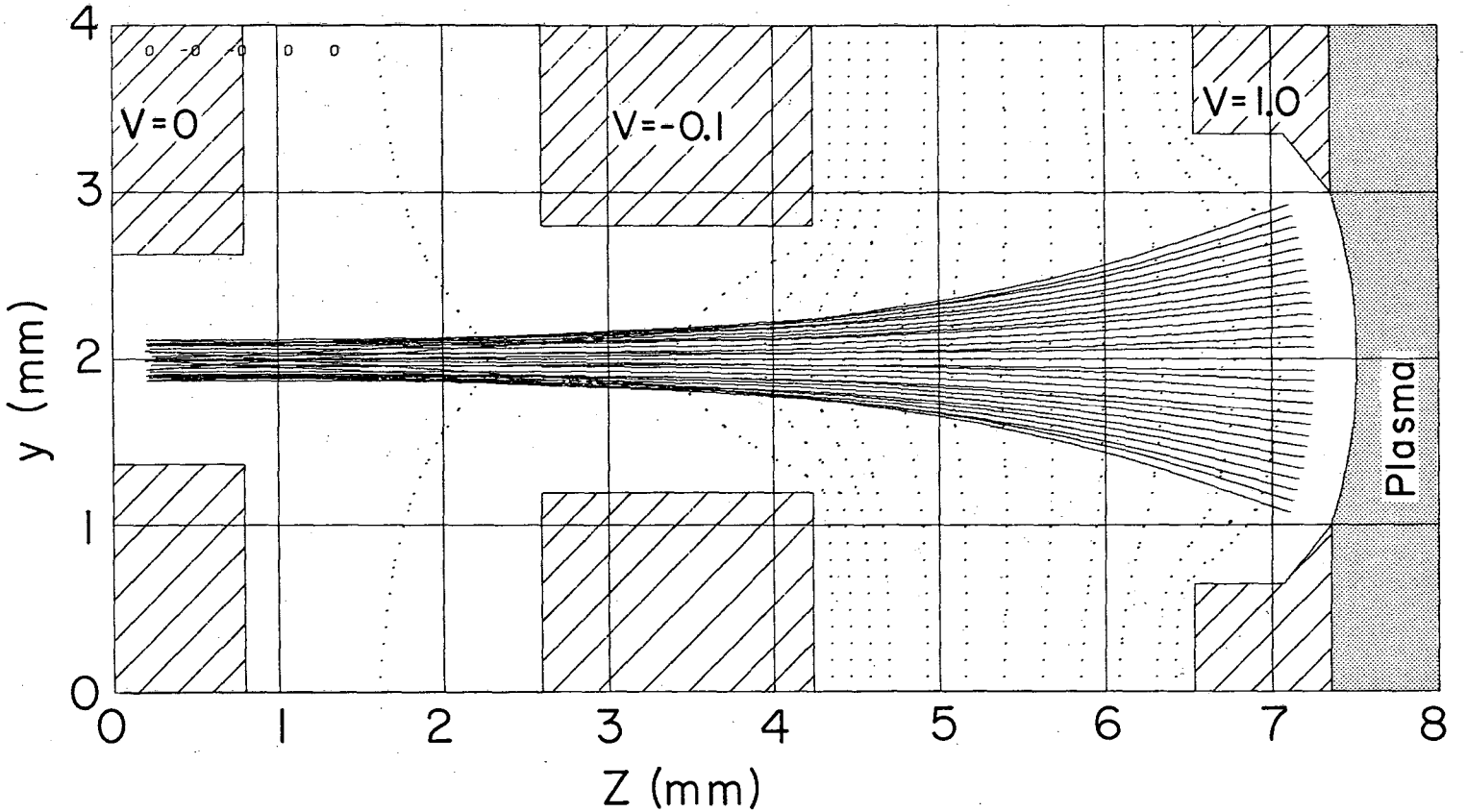

XBL 7111-4685

Fig. 3.

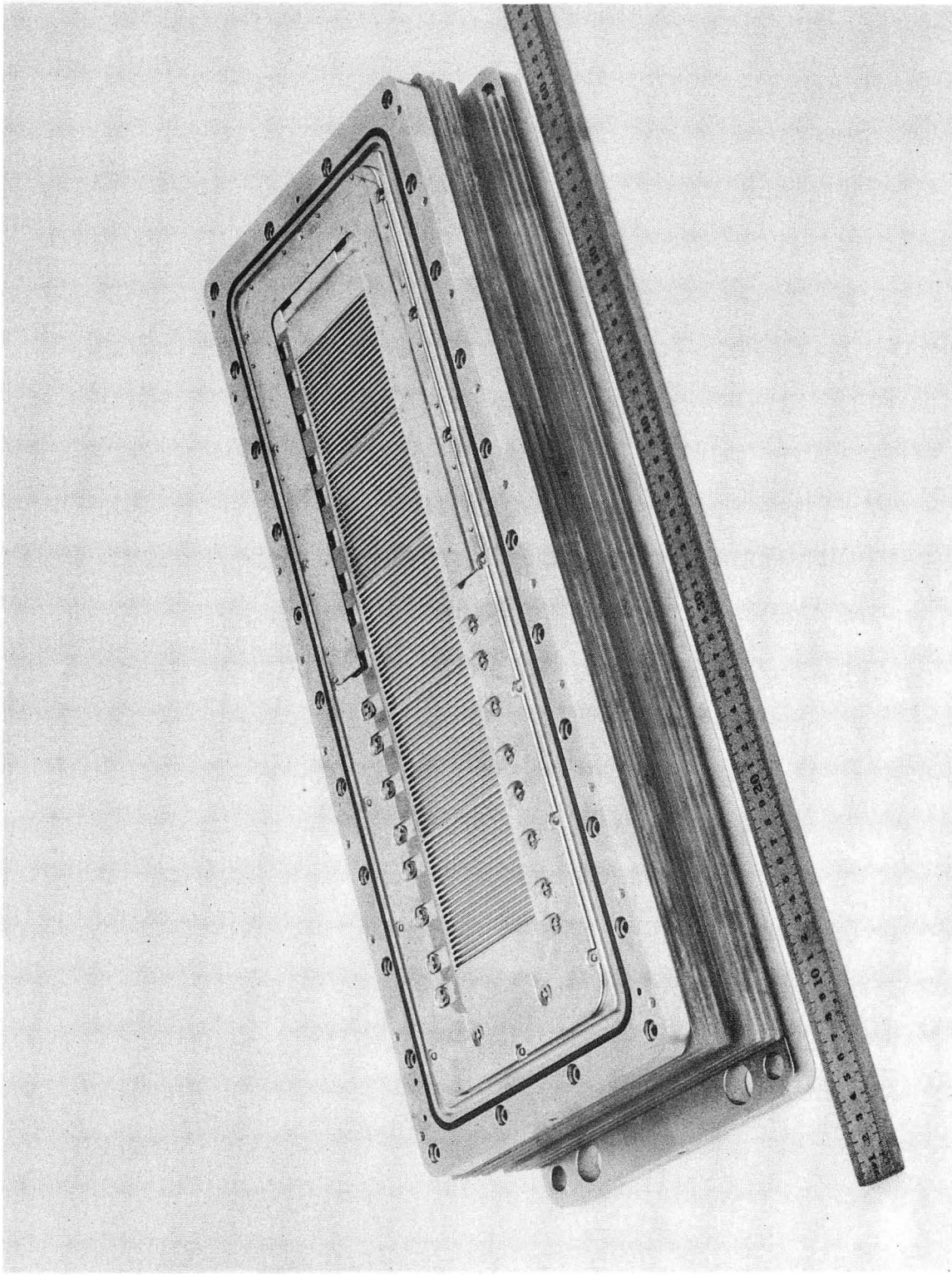

XBB739-5511

Fig. 4.

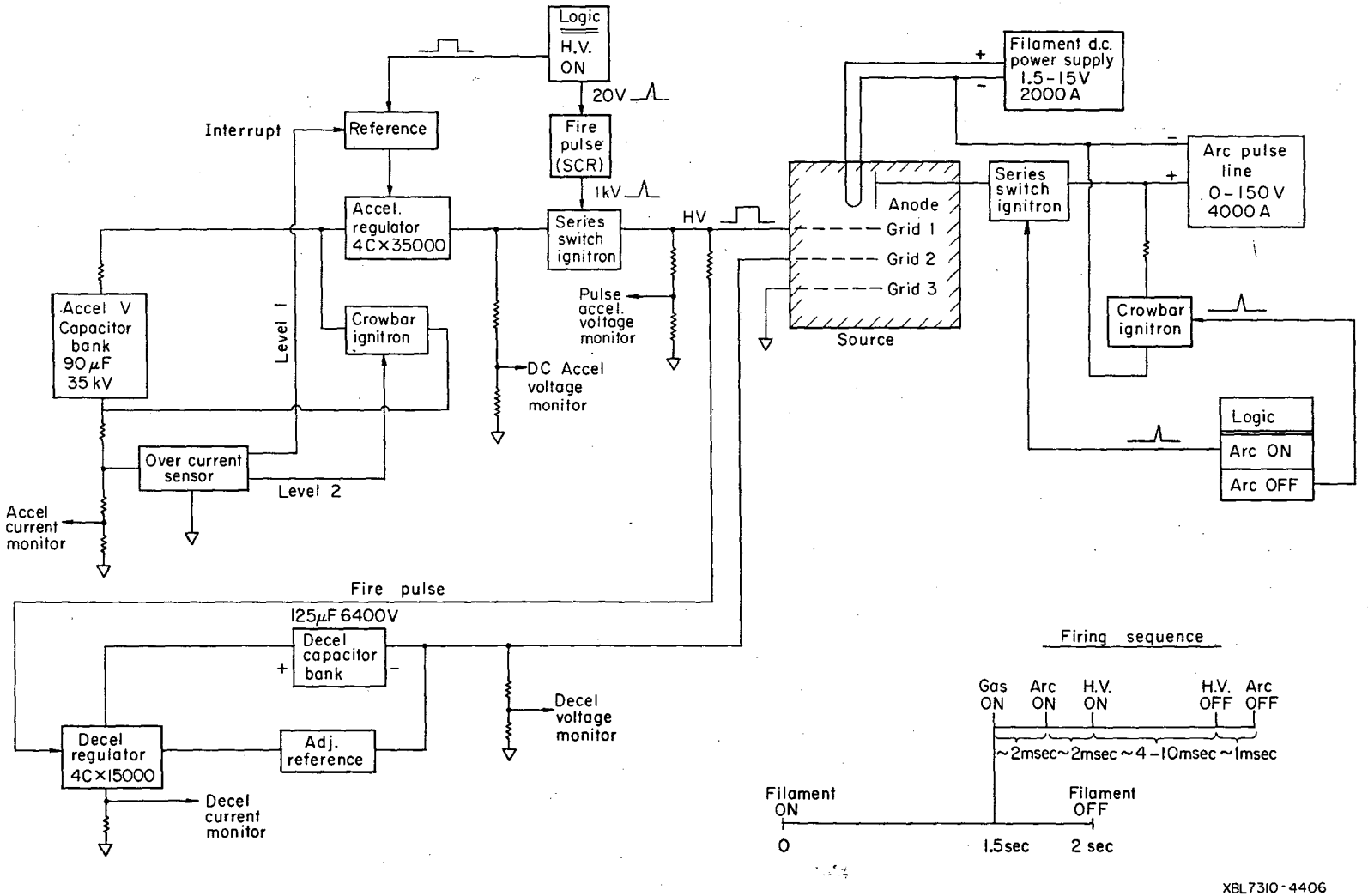
Logic
H.V. ON
20V
Fire pulse (SCR)
1kV
Interrupt
Reference
Accel. regulator 4C×35000
Series switch ignitron
HV
Crowbar ignitron
Level 1
Level 2
Over current sensor
Accel V Capacitor bank 90μF 35 kV
Accel current monitor
Pulse accel. voltage monitor
DC Accel voltage monitor
Fire pulse
125μF 6400V
Decel capacitor bank
Decel regulator 4C×15000
Adj. reference
Decel voltage monitor
Decel current monitor
Filament d.c. power supply 1.5-15V 2000 A
Anode
Grid 1
Grid 2
Grid 3
Source
Series switch ignitron
Arc pulse line 0-150 V 4000 A
Crowbar ignitron
Logic
Arc ON
Arc OFF
Firing sequence
Gas ON
Arc ON
H.V. ON
H.V. OFF
Arc OFF
~2msec~2msec~4-10msec~1msec
Filament ON
Filament OFF
0
1.5sec
2 sec
XBL7310-4406

Fig. 5.

LEGAL NOTICE

This report was prepared as an account of work sponsored by the United States Government. Neither the United States nor the United States Atomic Energy Commission, nor any of their employees, nor any of their contractors, subcontractors, or their employees, makes any warranty, express or implied, or assumes any legal liability or responsibility for the accuracy, completeness or usefulness of any information, apparatus, product or process disclosed, or represents that its use would not infringe privately owned rights.

TECHNICAL INFORMATION DIVISION
LAWRENCE BERKELEY LABORATORY
UNIVERSITY OF CALIFORNIA
BERKELEY, CALIFORNIA 94720