Presented at the Fifth International
Conference of High Energy Physics
and Nuclear Structure, Uppsala,
Sweden, June 18-22, 1973

LBL-2433 c.2

RADIATIVE PION CAPTURE IN LIGHT NUCLEI

Peter Truöl, Helmut W. Baer, James A. Bistirlich,
Kenneth M. Crowe and Nico de Botton

RECEIVED
LAWRENCE
RADIATION LABORATORY

JAN 29 1974

LIBRARY AND
DOCUMENTS SECTION

November 1973

Prepared for the U. S. Atomic Energy Commission
under Contract W-7405-ENG-48

TWO-WEEK LOAN COPY

*This is a Library Circulating Copy
which may be borrowed for two weeks.
For a personal retention copy, call
Tech. Info. Division, Ext. 5545*

LAWRENCE BERKELEY LABORATORY
UNIVERSITY OF CALIFORNIA
BERKELEY

LBL-2433 c.2

34C

DISCLAIMER

This document was prepared as an account of work sponsored by the United States Government. While this document is believed to contain correct information, neither the United States Government nor any agency thereof, nor the Regents of the University of California, nor any of their employees, makes any warranty, express or implied, or assumes any legal responsibility for the accuracy, completeness, or usefulness of any information, apparatus, product, or process disclosed, or represents that its use would not infringe privately owned rights. Reference herein to any specific commercial product, process, or service by its trade name, trademark, manufacturer, or otherwise, does not necessarily constitute or imply its endorsement, recommendation, or favoring by the United States Government or any agency thereof, or the Regents of the University of California. The views and opinions of authors expressed herein do not necessarily state or reflect those of the United States Government or any agency thereof or the Regents of the University of California.

Radiative Pion Capture in Light Nuclei *

Peter Truöl

Physik-Institut der Universität Zürich
Zürich, Switzerland

and

Helmut W. Baer, James A. Bistirlich,
Kenneth M. Crowe, Nico de Botton §

Lawrence Berkeley Laboratory
University of California
Berkeley, California 94720

§ Permanent address: DPLN/HE, C.E.N. Saclay, BP n°2,
91-Gif sur Yvette, France

* Work done under the auspices of the U.S. Atomic
Energy Commission

Abstract

Radiative Pion Capture in Light Nuclei by P. Truöl (Physik-Institut der Universität, Zürich, Switzerland) and H.W.Baer, J.A. Bistirlich, K.M. Crowe, N. de Botton (Lawrence Berkeley Laboratory, University of California, Berkeley, California 94720)

New results from a high-resolution measurement of the photon spectra following radiative pion capture in ^{3}He, ^{6}Li and ^{14}N are presented. The observed branching ratios to bound states are compared with theoretical calculations based on the impulse approximation. For the 1p-shell nuclei excellent agreement is obtained, when shell model wavefunctions and a Hamiltonian deduced from the fundamental process $\pi^- p \rightarrow n\gamma$ are used. For the ^{6}Li$(\pi^-,\gamma)^6$He(0^+) and the ^{3}He$(\pi^-,\gamma)^3$H transitions we also test predictions using PCAC and soft-pion techniques, which are especially relevant in comparison to the experimentally observed Panofsky-ratio in ^{3}He. Transitions to higher excited states in the giant resonances region and into the continuum are also discussed.

Photonuclear reactions have contributed much to our knowledge of nuclear structure. The most recent addition to the electromagnetic probes is the negative pion, where one observed the radiative capture, $\pi^- N(A,Z) \rightarrow N^*(A,Z-1)$ in a large range of nuclei. The basic process, $\pi^- p \rightarrow n\gamma$ is through its inverse, pion photoproduction near threshold sufficiently well known, that one may deduce from it an effective Hamiltonian for the interaction, which can be used to calculate absorption on bound, single protons in nuclei via the impulse-approximation. This Hamiltonian is given in the form [1]

$$H_{eff} = 2\pi i \left(1+\frac{m_\pi}{m_p}\right) \sum_{j,n} e^{-i\underset{\sim}{k}\underset{\sim}{r}_j} \tau_j^{(-)} \phi_e^n(\underset{\sim}{r}) \Big\{ A\underset{\sim}{\sigma}_j\cdot\hat{\varepsilon}_r + B(\underset{\sim}{\sigma}_j\cdot\hat{\varepsilon}_r)(\underset{\sim}{q}\cdot\underset{\sim}{k}) \tag{1}$$

$$+ C(\underset{\sim}{\sigma}_j\cdot\underset{\sim}{k})(\underset{\sim}{q}\cdot\hat{\varepsilon}_r) + iD\underset{\sim}{q}\cdot(\underset{\sim}{k}\times\hat{\varepsilon}_r) + E(\underset{\sim}{\sigma}_j\cdot\underset{\sim}{q})(\underset{\sim}{q}\cdot\hat{\varepsilon}_r)\Big\} \delta(\underset{\sim}{r}-\underset{\sim}{r}_j)$$

where $\underset{\sim}{\sigma}_j$ and $\underset{\sim}{r}_j$ are the nucleon spin and coordinate, $\tau_j^{(-)}$ the isospin operator changing a proton into a neutron, $\underset{\sim}{k}$ and $\hat{\varepsilon}_r$ are the photon momentum and polarisation, and $\underset{\sim}{q}$ and $\phi_l^n(\underset{\sim}{r})$ are the pion momentum and wavefunction in the atomic orbit (n,l). The constants are given from the appropriate combination of threshold multipole amplitudes [2]. The transition rate between the initial $(J_i M_i)$ and final $(J_f M_f)$ nuclear states is given by

$$\lambda(\pi e_j i \rightarrow f) = \frac{k}{\pi} \frac{1}{(2J_i+1)(2l+1)} \sum_{M_i M_f} \int \frac{d\hat{k}}{4\pi} |\langle J_f M_f | H_{eff} | J_i M_i \rangle|^2 \tag{2}$$

The first term in the effective Hamiltonian has been shown theoretically [3] to introduce electric dipole transitions to known collective $T = 1$ $(J^\pi = 1^-, 2^-)$ excitation modes in mass - 12 and -16 systems. These transitions were experimentally observed [4] and qualitative agreement for the observed rates was found, when wavefunctions were used, which were representations of the SU(4) classification of giant resonances. Peaks corresponding to transitions to unresolved bound states in ^{12}B and ^{16}N were also seen in the photon spectrum from radiative pion

capture in ^{12}C and ^{16}O. For ^{12}C the experimental branching ratio is 0.091 ± 0.009% [4], whereas the theoretical calculation with a nuclear wavefunction adapted to fit inelastic electron scattering formfactors, β-decay ft-values and γ-widths of the same levels or their analogs in ^{12}C yields 0.105 ± 0.035% [5]. The good agreement, though limited through inaccurate pionic X-ray widths and capture schedules encouraged us to extend our measurements to nuclei, where the separation of bound states is large enough, that they may be resolved with our instrument. Such cases are ^{3}He, ^{6}Li and ^{14}N. The selection of ^{3}He and ^{6}Li is further favoured by the fact, that 1s-capture, for which calculations are felt to become less model dependent, gives the major contribution to the branching ratios as Z becomes small. For ^{3}He and ^{6}Li we also aim at testing predictions [6] based on PCAC and soft pion theorems, which relate the radiative pion capture matrixelement through the elementary particle treatment of nuclei to axial formfactors, which may then be compared to the same quantities appearing in u-capture and β-decay. This method essentially amounts to replacing the value of the constant A in the effective Hamiltonian by $(\alpha/4\pi)^{1/2} g_A/g_V f_\pi (1+\delta)$ [7], where α is the fine structure constant, g_A/g_V is ratio of the axial-vector to vector coupling constants for the nucleon, f_π the pion decay constant and δ is a correction term discussed in detail in reference [7].

The experiments were performed at the LBL-184" cyclotron. The experimental set-up is shown in Figure 1. The heart of the experiment is 180°-pairspectrometer using magnetostrictive-readout wirechambers as detectors for the electron-positron pair. The resolution of this instrument is 2 MeV FWHM as demonstrated by the width of the $\pi^{-3}He \rightarrow {}^{3}H\gamma$ transition in Figure 2. The acceptance reaches a maximum value of $4.15*10^{-5}$ near 130 MeV with a 3% radiation length gold converter and decreases approximately linearly to zero at 50 MeV photon energy. We used a 96% enriched ^{6}Li-target, a liquid ^{3}He-target cooled to 2°K and a liquid nitrogen target. The photon

spectra for ^{3}He, ^{6}Li and ^{14}N are given in Figures 2,3 and 4. We now turn to a brief discussion of the experimental results for the transitions to bound states.

^{3}He:

The spectrum shows the transitions to the ^{3}Hγ-final state (line at 135.8 MeV), to the ^{2}H+n+γ- and the p+n+n+γ-continuum with endpoint energies of 129.8 and 127.7 MeV, respectively and the ^{3}H+π^0 final state with a uniform distribution of photon energies between 53 and 86 MeV from the decay $\pi^0 \rightarrow 2\gamma$. The branching ratios for the three contributions in the above order are 6.5 $\pm$ 0.8 %, 7.4 $\pm$ 1.7 % and 18.8. $\pm$ 2.3 %, leaving 67.3 $\pm$ 3.0 % for the nonradiative absorption modes π^{-3}He$\rightarrow$p+n+n and ^{2}H+n in agreement with previous measurements yielding 73.7 $\pm$ 5.9 % [8]. For the determination of the Panofsky-ratio, defined by

$$P = \frac{\sigma(\pi^- {}^3He \rightarrow {}^3H\pi^0)}{\sigma(\pi^- {}^3He \rightarrow {}^3H\gamma)} \qquad (3)$$

one need not to know the absolute efficiency of the spectrometer, since we intersperse our ^{3}He-runs with calibration runs with a H_2-target, where the same quantity is measured in this case however known to an accuracy of 1.5 % from previous experiments [9]. the corresponding photon energies being 129.4 and 55 to 83 MeV. We find P(^{3}He) = 2.89 $\pm$ 0.15 in disagreement with an earlier measurement which found P(^{3}He) = 2.28 $\pm$ 0.18 [10] . In order to relate the observed branching ratios to transition rates calculated with help of expressions (1) and (2), we need to divide the theoretical rates by the total nuclear absorption rates, multiply with the fraction of pions absorbed from a given orbit and then sum incoherently over all contributions from the different Bohr orbits. For ^{3}He the relevant quantities are not known, so one must turn to the Panofsky-ratio for the comparison between theory and

experiment. Theoretical calculations to date are incomplete in the sense, that they only consider 1s-capture, assuming that 2p-capture contributes little or at least equally to radiative and mesonic capture, and further consider only the dominant term in the effective Hamiltonian. An impulse approximation calculation for mesonic capture uses an effective Hamiltonian of the form

$$H_{eff} = 2\pi i \left(1+\frac{m_\pi}{m_p}\right)\frac{\sqrt{\Omega}}{3}(a_1-a_3)\sum_{j=1}^{A}\delta(\underset{\sim}{r}-\underset{\sim}{r}_j)\,\phi_\mu^e(\underset{\sim}{r})\,\tau_j^{(-)}\,e^{i\underset{\sim}{q}_0\underset{\sim}{r}} \qquad (4)$$

where (a_1-a_3) is the difference of the singlet-triplet pion-nucleon scattering length and $\underset{\sim}{q}_0$ is the π^0-momentum. The resulting Panofsky-ratio is than conveniently expressed in terms of the equivalent quantity in hydrogen [11].

$$P(^3He) = P(^1H) \;*\; \frac{|F_V(q^2=0.054\,m_\pi^2)/g_V|^2}{|F_A(q^2=0.054\,m_\pi^2)/g_A|^2} * W(k_1,q_{01},k_3,q_{03}) \qquad (5)$$

W is a kinematical factor and F_V and F_A are the vector and axial-vector formfactors taken at the momentum-transfers appropriate for radiative and mesonic capture (W=1.108). With $F_V \cong 1$ one can determine $F_A(q^2)$ either from calculations using wavefunctions for the ^3He-^3H mirror states [11,12] or with $F_A(q^2)$ from its value at $q^2 \cong 0$ as measured in ^3H β-decay [13]. In the latter case one takes usually the same variation with q^2 as the vector formfactor [14]. Both methods yield values $0.52 \leq |F_A(q^2)g_V/g_A|^2 \leq 0.55$ and $3.0 \leq P \leq 3.3$ in good agreement with our experimental value. PCAC and soft pion techniques have been applied to both processes with the result P=2.20 [15], or to radiative capture only with charge exchange calculated in the impulse approximation obtaining P = 2.10 [6a,16]. Considering the uncertainties in the formfactors and the impulse-approximation calculation of the mesonic capture a measurement of the total nuclear absorption rates or the $\pi^{-3}He$ scattering lengths is needed as well as a calculation including the full Hamiltonian for the radiative capture before a decisive test on the two contributions to the Panofsky-ratio can be carried out

separately.

^{6}Li:

The solid line in Figure 3a represents a fit to the spectrum containing the following contributions: a) Two lines at 134 and 132.2 MeV corresponding to the ^{6}He-ground state ($J^\pi=0^+$) and the first excited state at 1.8 MeV ($J^\pi=2^+$), b) a continuum component associated with quasifree capture into ^{4}He+n+n and ^{5}He+n final states, c) excitations at 119, 112 and 105 MeV described by Breit-Wigner forms. Evidence for these resonances is still statistically weak. The upper end of the spectrum separating the contributions to the bound states is shown in Figure 3b. In Table I we compare our experimental results for the branching ratios to the theoretical calculations using the impulse-approximation [5, 17] (IA) and the elementary particle treatment [6]. We find that the IA combined with shell model wavefunctions adjusted to fit reactions involving the same transitions and the nuclear radius gives excellent agreement with the experimental rate (an average of all IA calculations, excluding the one by Vergados and Baer, where the p-shell harmonic oscillator shell parameter was adjusted to fit energy calculations), gives R(theor.) = 0.319 $\pm$ 0.044 compared to R(exp.) = 0.306 $\pm$ 0.035 %, with the error in the theoretical number reflecting only the uncertainties in the pionic X-ray data. Since in these calculations all terms in the Hamiltonian were considered and 2p-capture, which is shown to contribute about 30% to the total rate, is properly accounted for, we feel that this transition is a convincing test case to establish radiative pion capture as a new tool for nuclear structure information [18,19]. The soft pion calculations, though valid only for 1s-capture yield values about 20% higher than the IA. The calculations differ only in secondary aspects, such as the treatment of the distortion of the pionic wavefunctions due to strong

interaction and nuclear size, values of the formfactors, which are either taken from u-capture or from β-decay. The highest value in Table I was obtained with a 35% additional correction to the soft-pion amplitude from ρ - contributions, nuclear intermediate states etc.. Our measurements in ^{6}Li as well as in ^{3}He indicate, that the corrections to the soft-pion amplitude are certainly smaller than estimated so far [7]. The good agreement with IA calculations further indicates that exchange contribution maybe neglected.

^{14}N:

The high neutron separation energy for the ^{13}C+n+γ-final state (8.2MeV) and the high excitation energy of the first excited state in ^{14}C (6.1 MeV), permits one to completely resolve the transition to the ^{14}C ground state (E_γ = 138 MeV). The corresponding β-decay matrixelement, given by the dominant part of the effective Hamiltonian for our reaction taken at q^2=0, exhibits the well known anomaly; log ft = 9 instead of 3 for an allowed Gamow-Teller transition, ascribed to a fortuitous cancellation. For radiative pion capture we have $q^2=0.98m_\pi^2$ and also the additional terms in the Hamiltonian, so we would expect the fortuitous cancellation to be removed to some extent. Indeed Vergados [20] using shell-model wavefunctions predicts a branching ratio of 0.0077%, indicating that the reduction in the matrixelement is only a factor of 6 to 8 instead of 1000 if we compare to the ^{6}Li$\rightarrow^6$He-transition. Though the spectrum shows this transition to be present the evaluation of the branching ratio is complicated by the uncertain contributions from in-flight capture background. Assuming no in-flight background at all we get an upper limit of 0.008%, assuming a constant background normalised to events above E_γ=140 MeV we find 0.004 $\pm$ 0.003% for the branching ratio in reasonable agreement with the theoretical calculation. Just above the break-up threshold the photon spectrum is dominated by a peak corresponding to an excitation energy of 7.2 MeV.

Again shell-model wavefunction and IA with the Hamiltonian of equation (1) predict a dominant transition of strength 0.12% to the $J^{\pi} = 2^{+}$-state at 7.01 MeV [20] to be compared with the experimental value of 0.094 ± 0.024 %.

We now turn to a brief discussion of transitions into the giant resonance region and into the continuum. Though a reasonably good, average description of the continuum can be obtained with a simple pole model [21], which assumes quasifree capture on a proton, with average excitations of the recoil nucleus varying from 0 to 5 MeV (see curves in Figures 2,3 and 4), it cannot be considered a satisfactory prescription to subtract the nonresonant background under the transitions to higher excited states. Until a meaningful unified model treating resonances and quasifree capture is formulated only qualitative statements can be made. We find however again clear manifestation of collective excitation in ^{14}C around 20.5 MeV (22.8 MeV in ^{14}N).

In ^{6}Li only the peak around 112 MeV (about 23 MeV in ^{6}He) could be identified as an analog of states seen in ^{6}Li and ^{6}Be [18]. For ^{3}He we find no statistical conclusive evidence for excitations in the A = 3 system. However the deviations from the simple pole model (Figure 2b) suggest a broad peak around 10 - 15 MeV excitation energy. Where a similar anomaly was found in the $^{2}H(p,\gamma)^{3}He$ capture reaction [22], but without detailed considerations of the final state interactions between the outgoing neutron and the recoil nucleus, which is seen to modify the spectrum considerably in the ^{4}He and ^{2}H case, a definite conclusion cannot be reached.

References:

1) J. Delorme, T.E.O. Ericson Phys. Letters 21, 98 (1966)
D.S. Anderson, J.M. Eisenberg Phys. Letters 22, 164 (1966)

2) Typical values are: $A = -33.2\ m_\pi^2$, $B = 4.8$, $C = -32.9$, $D = 11.7$, $E = 30.4$ (in units $10^{-3} m_\pi^{-4}$); W. Maguire, C. Werntz, ref. 5.

3) F.J. Kelly, H. Ueberall, Nucl. Phys. A118, 302 (1968)
J.D. Murphy et al. Phys. Rev. Letters 19,714 (1967)

4) J.A. Bistirlich, K.M. Crowe, A.S.L. Parsons, P. Skarek, P. Truöl Phys. Rev. C5,1867 (1972)

5) W. Maguire, C. Werntz Nucl. Phys. A205, 211 (1973)

6) ^{3}He: a) M. Ericson, A. Figereau Nucl. Phys. B11,621 (1969); Nucl. Phys. B3,609 (1967)
^{6}Li: b) J. Delorme Nucl. Phys. B19,573 (1970)
^{3}He + ^{6}Li: c) L. P. Fulcher, J.M. Eisenberg Nucl. Phys. B18, 271 (1970)
d) P. Pascual, A. Fujii Nuovo Cimento 65A,411 (1970); Erratum Nuovo Cimento 67A,135 (1970)
e) D. Griffiths, C.W. Kim Phys. Rev. 173,1584 (1968)

7) M. Ericson, M. Rho Phys. Reports 5C,58 (1972)

8) O.A. Zamaidogora et al. Sov. Phys. JETP 24, 111 (1967)

9) V.T. Cocconi, T. Fazzini, M. Legros, W. Merrison, Nuovo Cimento 22, 494 (1961): $P(^1H) = 1.533 \pm 0.021$

10) O.A. Zamaidogora et al. Sov. Phys. JETP 21,848 (1965)

11) A.M.L. Messiah Phys. Rev. 87,639 (1952)
B.V. Struminsky, Proc. Int. Conf. on High Energy Physics, CERN, p.17 (1962)

12) A. Fujii, D.J. Hall, Nucl. Phys. 32, 102 (1962)

13) R.C. Salgo, H.H. Staub Nucl. Phys. A138,417 (1969)

14) J.S. McCarthy, I.Sick, R.R. Whitney, M.R. Yearian, Phys.Rev. Letters 25,884 (1970)

15) P. Pascual, A. Fujii, ref. 6d. Here $P(^1H)$ is replaced by $(q_1/k_1)(m_\pi^2/8\pi\alpha f_\pi^2) = 1.37$, but their formfactor ratio is 1/.64

16) The difference between this result and our result comes mainly from different radiative rates: 4.43×10^{15} sec^{-1} and 3.04×10^{15} sec^{-1}, arising from a 22% correction to the soft pion amplitude and different formfactors: .64 and .55, respectively.

17) J.D. Vergados, H.W. Baer, Phys. Letters B41,560 (1972)
F. Roig, P. Pascual, preprint, G.I.F.T.(Spain), (April 1972)

18) A more detailed account of the ^{6}Li-work will be published elsewhere, H.W. Baer et al., submitted to Phys. Rev.

19) This conclusion is further supported by a recent calculation of Vergados (private communication to H.W. Baer), who used the phenomenological (^{6}Li,^{6}He) wave functions determined by Donnelly and Walecka (Stanford-University preprint ITP-430 (1973) from a fit to all electromagnetic processes involving these two nuclear states excluding radiative pion capture. With the configurations $|^6Li, 1^+0\rangle = (0.810\pm0.001)\ |(p_{3/2})^2; 1^+0\rangle - (0.581\pm0.001)\ |p_{3/2}p_{1/2}; 1^+0\rangle + (0.084\pm0.002)\ |(p_{1/2})^2; 1^+0\rangle$ and $|^6He, 0^+1\rangle = (0.80\pm0.03)\ |(p_{3/2})^2; 0^+1\rangle + (0.60\pm0.04)\ |(p_{1/2})^2; 0^+1\rangle$ he obtains a branching ratio of 0.305 ± 0.057 %, using the Hamiltonian of equation (1).

20) J.D. Vergados, Proc. Int. Conf. on Photonuclear Reactions and Applications. Asilomar (1973)

21) L.G. Dakhno, Yu.D. Prokoshkin, Sov. Jour. Nucl. Phys. 7,351 (1968); for a recent discussion and corrections to this model see H.W.Baer, K.M. Crowe, Proc. Int. Conf. on Photonuclear Reactions and Applications, Asilomar (1973)

22) C.C. Chang, E.M. Diener, E. Ventura, Phys. Rev. Letters 29,307 (1972)

Table I Comparison of experimental and theoretical capture rates for $^{6}Li(\pi^{-},\gamma)^{6}He$ $(0^{+},g.s.)$

$\lambda_\gamma(1s)$ $(*10^{15}sec^{-1})$	$\frac{\lambda_\gamma(1s)}{\lambda_a(1s)}$ (%)	$\lambda_\gamma(2p)$ $(*10^{10}sec^{-1})$	$\frac{\lambda_\gamma(2p)}{\lambda_a(2p)}$ (%)	$R(\pi^{-},\gamma)$ [a] (%)	References		
1.46 ± .22	.50 ± .08	4.12 ± .62	.18 ± .06	.31 ± .07	Roig, Pascual	IA	[17]
1.51 ± .15	.51 ± .06	5.26 ± .06	.23 ± .06	.34 ± .07	McGuire, Werntz	IA	[5]
2.08	.70 ± .05	4.32	.19 ± .05	.39 ± .08	Vergados, Baer	IA	[17]
1.40	.47 ± .03	4.44	.52 ± .14	.30 ± .05	Vergados, Baer	IA	[17]
2.3 ± .5	.78 ± .18			.62 ± .11	Delorme	EP	[6b]
1.86 ± .18	.63 ± .08			(.25 ± .07) [b]	Pascual, Fujii	EP	[6d]
1.9 + .4, -.2	.64 +.14, -.08			(.26 +.08, -.07) [b]	Pulcher, Eisen.	EP	[6c]
1.65	.56 ± .04			(.23 ± .06) [b]	Griffiths, Kim	EP	[6e]
				.306 ± .035	This Experiment		

a) $R(\pi^{-},\gamma) = \frac{\lambda_\gamma(1s)}{\lambda_a(1s)} \times \sum\omega_s + \frac{\lambda_\gamma(2p)}{\lambda_a(2p)} \times \sum\omega_p$ [18]

where $\sum\omega_s = .40 \pm .09$, $\sum\omega_p = .60 \pm .09$

$\lambda_a(1s) = 2.95 \times 10^{17}\ sec^{-1} \pm .20$, $\lambda_a(2p) = 2.28 \times 10^{13}\ sec^{-1} \pm .61$

b) 1s-capture only

Figure captions:

Figure 1: The electron-positron pair spectrometer and range-telescope geometry. The trigger for an event was $\pi 1 \times \pi 2 \times \pi 3 \times \overline{\pi s} \times (AxB)_i \times (AxB)_k$, $i \neq k$, $k \pm 1$

Figure 2: Photon spectrum from radiative pion capture in ^3He. The solid line is a pole model calculation [21]. The instrumental line shape causes the peak in the spectrum to appear 2 MeV lower than the photon energy. We therefore indicate break-up thresholds and the position of the $^3He(\pi^-,\gamma)^3H$ (g.s.) line shifted down by 2 MeV.

a) Complete Spectrum

b) Enlarged view of the upper end of the spectrum

Figure 3: The $^6Li(\pi^-,\gamma)$ photon spectrum in the 50 - 150 MeV region. Solid line: Fit described in the text
Short-dashed line: Pole model with complete kinematics 21
Dash-dot-line: $^5He + n + \gamma$ phase-space, normalised to same number of photons as pole model
Long-dashed line: Pole model of Dakhno and Prokoshkin [21]

Figure 4: The $^{14}N(\pi^-,\gamma)$ photon spectrum between 50 and 150 MeV.
Solid line: Pole model [21]

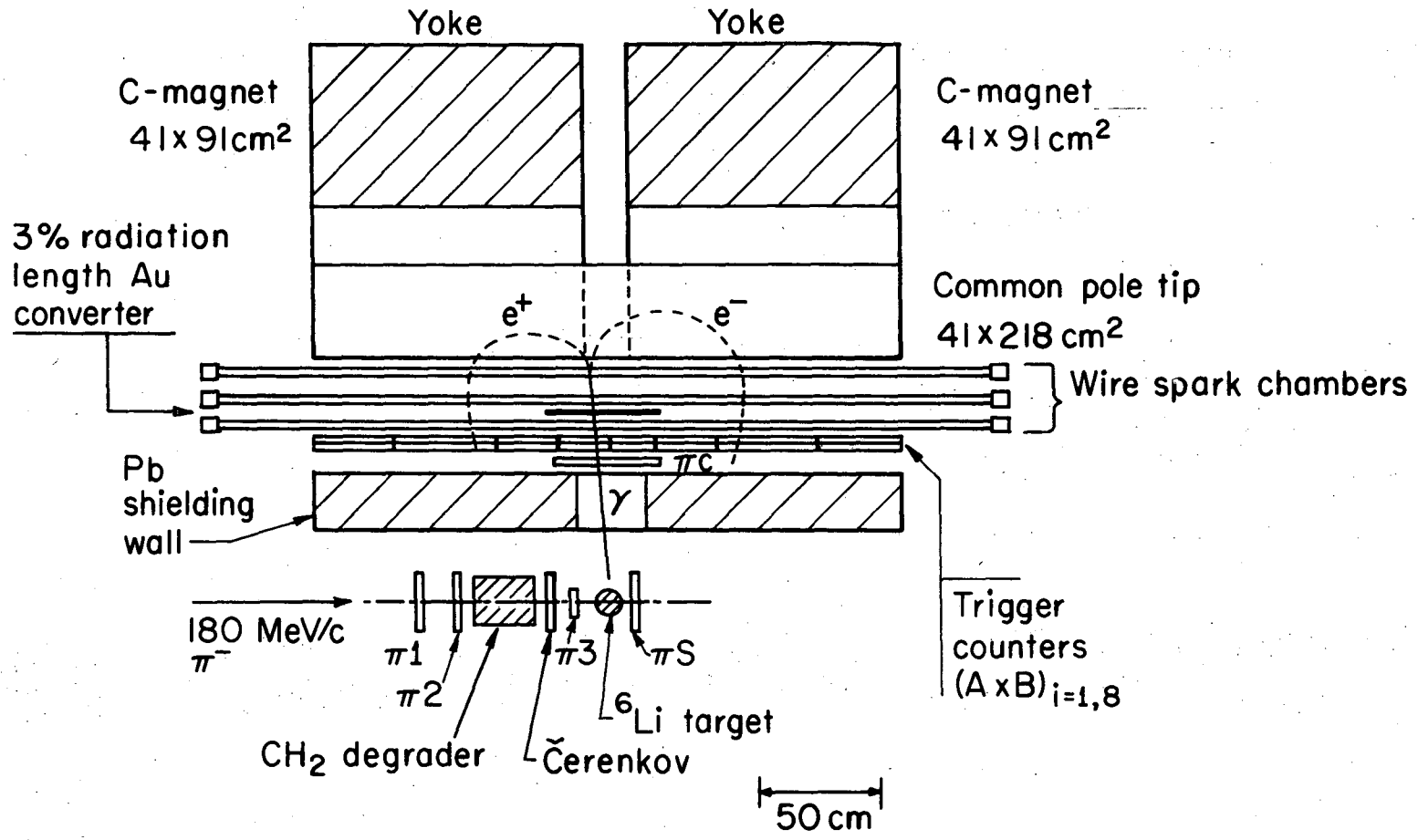

XBL732-2240

Fig. 1.

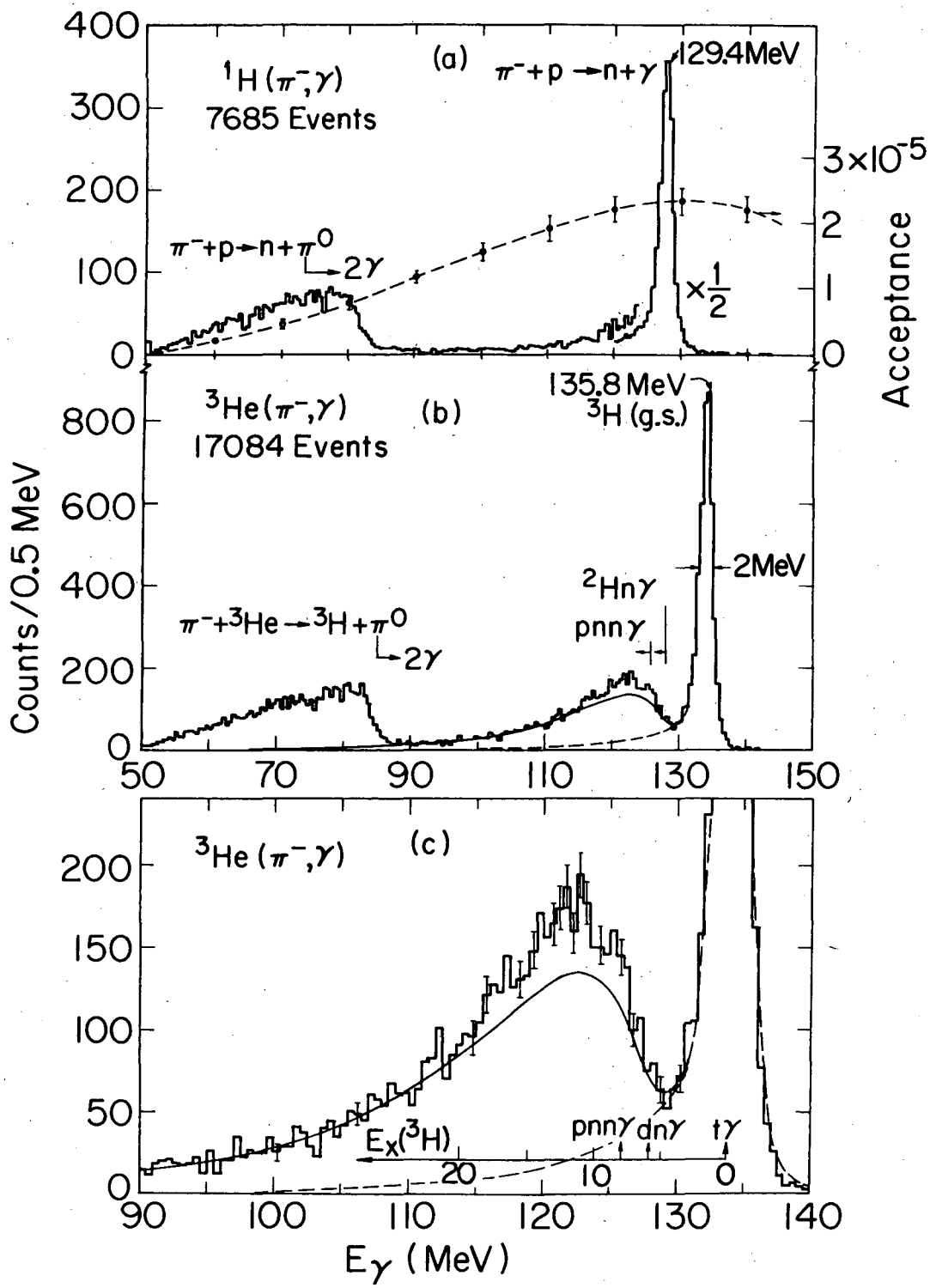
(a)
$^1H(\pi^-,\gamma)$
7685 Events
$\pi^-+p\rightarrow n+\gamma$
129.4MeV
$\pi^-+p\rightarrow n+\pi^0$
$\rightarrow 2\gamma$
$\times\frac{1}{2}$
3×10^{-5}
Acceptance
(b)
$^3He(\pi^-,\gamma)$
17084 Events
135.8 MeV
^3H (g.s.)
2MeV
$^2Hn\gamma$
pnnγ
$\pi^-+{}^3He\rightarrow{}^3H+\pi^0$
$\rightarrow 2\gamma$
Counts/0.5 MeV
(c)
$^3He(\pi^-,\gamma)$
$E_x(^3H)$
pnnγ dnγ tγ
E_γ (MeV)
XBL 7310-4306

Fig. 2.

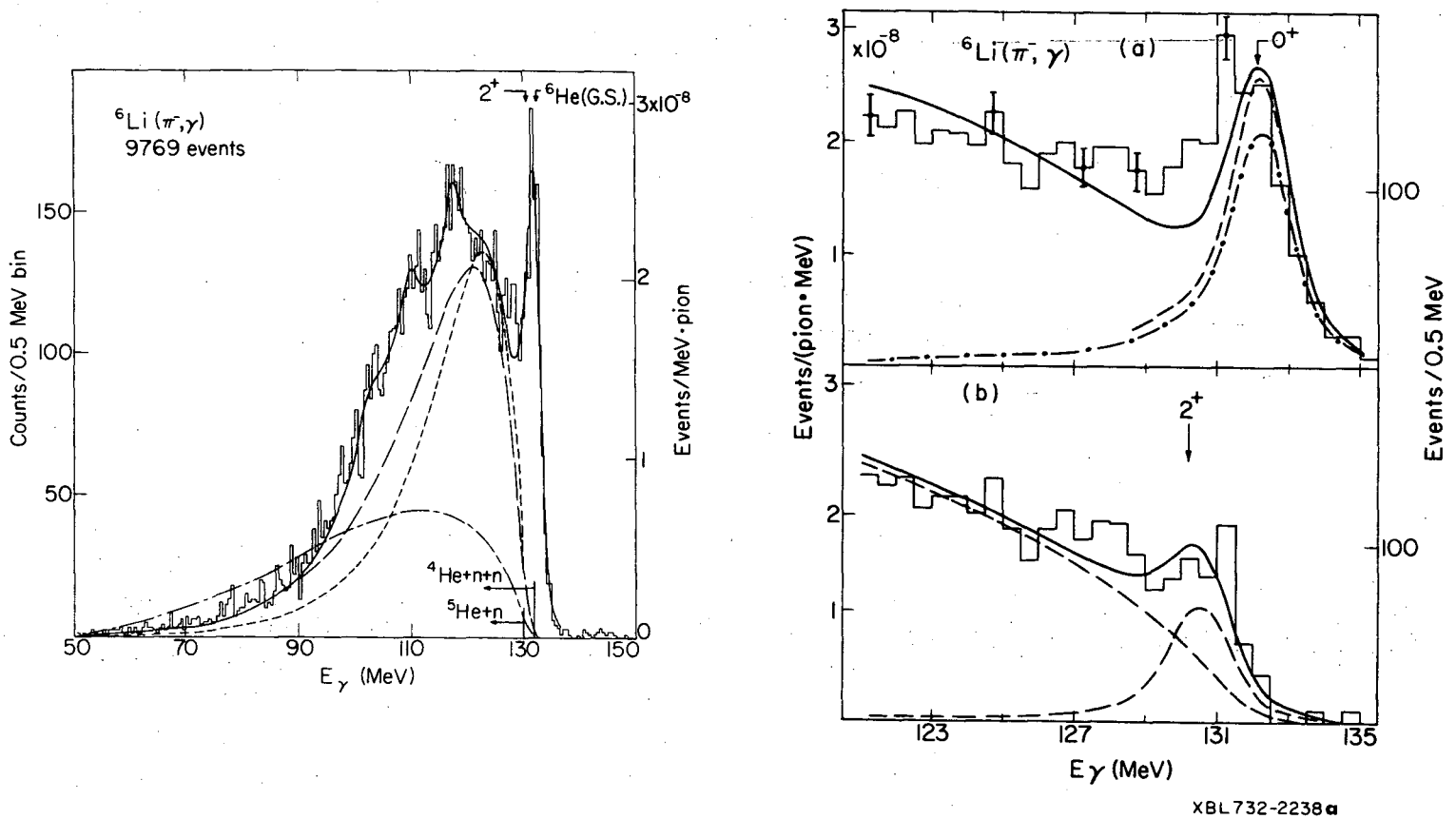
^{6}Li (π^-,γ)
9769 events
2^+ → ^{6}He(G.S.)
3x10^{-8}
Counts/0.5 MeV bin
Events/MeV·pion
^{4}He+n+n
^{5}He+n
E$_\gamma$ (MeV)
x10^{-8}
^{6}Li(π^-, γ)
(a)
0^+
(b)
2^+
Events/(pion·MeV)
Events/0.5 MeV
Eγ (MeV)
XBL732-2238a

Fig. 3.

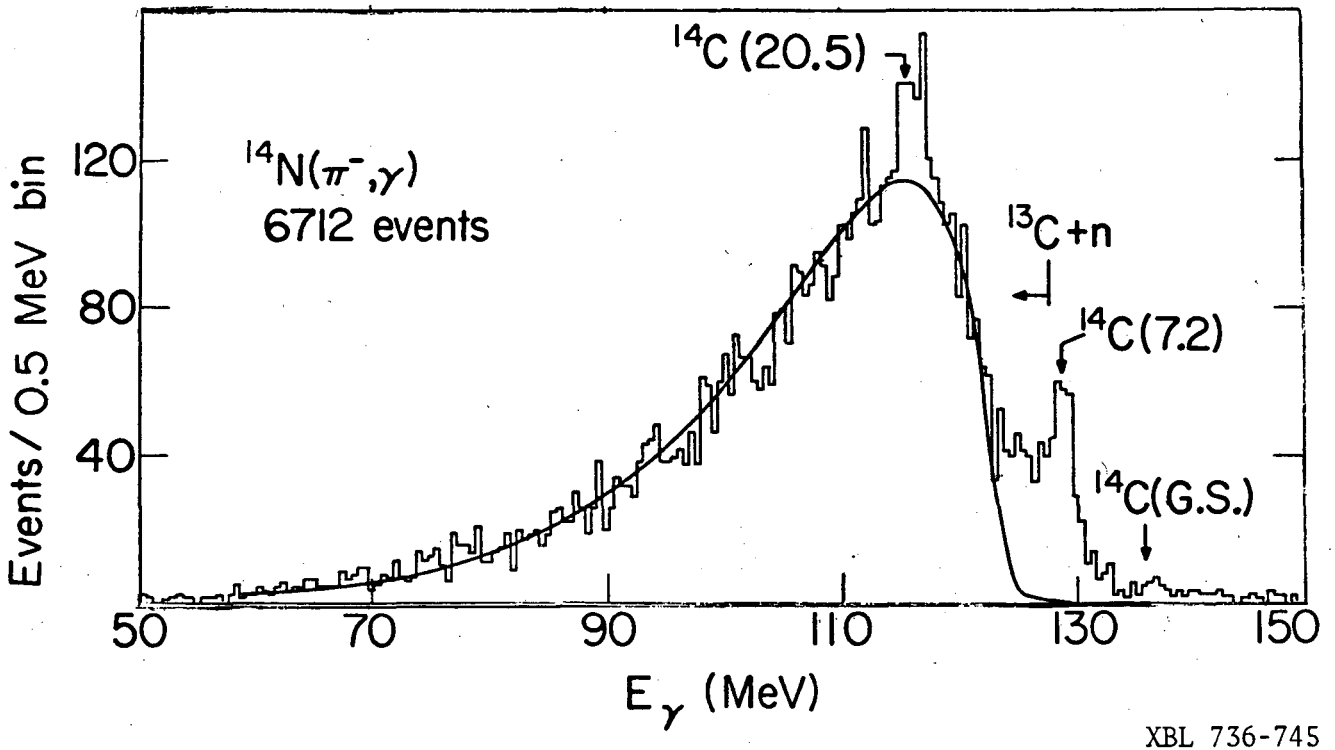

XBL 736-745

Fig. 4.

LEGAL NOTICE

This report was prepared as an account of work sponsored by the United States Government. Neither the United States nor the United States Atomic Energy Commission, nor any of their employees, nor any of their contractors, subcontractors, or their employees, makes any warranty, express or implied, or assumes any legal liability or responsibility for the accuracy, completeness or usefulness of any information, apparatus, product or process disclosed, or represents that its use would not infringe privately owned rights.

TECHNICAL INFORMATION DIVISION
LAWRENCE BERKELEY LABORATORY
UNIVERSITY OF CALIFORNIA
BERKELEY, CALIFORNIA 94720