Presented at the IEEE Nuclear Science
Symposium, San Francisco, California,
November 14-16, 1973.

LBL-2436
c.2

IMPURITIES IN HIGH-PURITY GERMANIUM AS DETERMINED BY FOURIER TRANSFORM SPECTROSCOPY

Eugene E. Haller and William L. Hansen

November 1973

Prepared for the U. S. Atomic Energy Commission
under Contract W-7405-ENG-48

RECEIVED
LAWRENCE
RADIATION LABORATORY

JAN 9 1974

LIBRARY AND
DOCUMENTS SECTION

LAWRENCE BERKELEY LABORATORY
UNIVERSITY OF CALIFORNIA

TWO-WEEK LOAN COPY

This is a Library Circulating Copy
which may be borrowed for two weeks.
For a personal retention copy, call
Tech. Info. Division, Ext. 5545

LBL-2436
c.2

25

DISCLAIMER

This document was prepared as an account of work sponsored by the United States Government. While this document is believed to contain correct information, neither the United States Government nor any agency thereof, nor the Regents of the University of California, nor any of their employees, makes any warranty, express or implied, or assumes any legal responsibility for the accuracy, completeness, or usefulness of any information, apparatus, product, or process disclosed, or represents that its use would not infringe privately owned rights. Reference herein to any specific commercial product, process, or service by its trade name, trademark, manufacturer, or otherwise, does not necessarily constitute or imply its endorsement, recommendation, or favoring by the United States Government or any agency thereof, or the Regents of the University of California. The views and opinions of authors expressed herein do not necessarily state or reflect those of the United States Government or any agency thereof or the Regents of the University of California.

IMPURITIES IN HIGH-PURITY GERMANIUM AS DETERMINED BY FOURIER TRANSFORM SPECTROSCOPY*

Eugene E. Haller and William L. Hansen

Lawrence Berkeley Laboratory
University of California
Berkeley, California 94720

SUMMARY

Fourier Transform Spectroscopy in the wave number range between 0 and 125/cm^1 (0 to 15 meV) was used to determine the impurities producing shallow energy levels in high-purity germanium. The sensitivity of the method is sufficient to detect impurities at a concentration of 10^9/cm^3 with excellent signal to noise ratio and the selectivity (energy resolution) allows a clean separation of all shallow levels. So far only net-concentrations can be observed so that it was necessary to measure n- and p-type material separately. The elements boron, gallium and indium appear to follow the expected segregation laws, while aluminum seems to be homogeneously distributed in the whole crystal. It has proven difficult to investigate n-type material due to the inability to produce low-noise electron-injecting contacts at the measuring temperatures (6 to 11°K).

INTRODUCTION

During the last few years a great deal of work has accumulated toward characterizing high-purity germanium in respect to detector fabrication. Many techniques were adapted and modified to complete this rather difficult task. Hall effect, conductivity measurements, and metal-point probing on bulk material as well as capacity-voltage dependences and alpha-particle probing of detectors and detector arrays helped to find the axial and radial distribution of donors and acceptors.[1,2] However, very little work was done on analysis to identify the impurities. The main reason was the lack of a method useful at net-concentrations below 10^{10}/cm^3. Since the remaining impurities are usually accidental (i.e. not added intentionally) it is of crucial interest to find their nature and hence, perhaps, their source.[3]

Photothermal ionization of neutral acceptors/donors as discovered by Russian scientists,[4,5,6] combined with Infrared Fourier Transform Spectroscopy (FTS) takes, in a unique way, advantage of the properties of high-purity germanium. This was shown by S. D. Seccombe and D. M. Korn[7] with n-type material produced by R. N. Hall at General Electric Research Center, Schenectady, New York. We have now applied the same method to p-type material down to net-acceptor concentrations of below 10^9/cm^3.

* This work was done under the auspices of the United States Atomic Energy Commission.

SEMICONDUCTOR SPECTROSCOPY

In order to explain the method one has to focus to a well known field in physics--the infrared spectroscopy of semiconductors.[8,9] It was shown theoretically and experimentally that impurities in semiconductors have more than one bound state for their holes/electrons and produce "hydrogen" like excitation spectra. Figure 1 presents the experimentally determined level schemes for neutral acceptors* in germanium.[10] Similar sets of excited states are produced by group V impurities in n-type germanium[11] as well as in any other electrically active centers. The ground state of shallow acceptors and donors in germanium lie around 10 meV from the valence and the conduction band. In order to be bound the temperature of the lattice has to be sufficiently low, i.e. below ~15°K.

Direct experimental proof for the existence of excited states is seen in the absorption spectra of doped germanium samples recorded by far-infrared spectrographs. Holes/electrons in the ground state preferentially absorb photons with the energies leading to transitions into a higher excited state or into the valence/conduction band. With transition energies in the order of 10 meV, photons in the wavelength region around λ = 125 μm (i.e. wave number** $\nu \simeq 80$/cm^1) are absorbed. One basic difficulty in this region (far infrared) arises from the lack of strong photon sources as might be expected from Planck's radiation law for black bodies.*** Conventional high resolution spectrographs further compound the difficulty since they use narrow slits, thereby utilizing only a tiny fraction of the available light from a source. These difficulties in practice limit the analysis of germanium impurities with conventional absorption spectroscopy to material with a concentration about ~10^{13}/cm^3.

The extremely low binding energies have two important consequences:

a) The hole/electron wave functions extend over many cells of the germanium lattice--typically they are spread over thousands of unity cells. This completely obscures the properties of the individual impurities and results in the excited states for all neutral acceptors being virtually the same. Only the most strongly bound ground states differ among different impurities. The resulting spectra therefore have the same structure but are shifted versus each other, the shifts depending on the differences in ground state energies. A similar situation prevails for neutral donors in germanium.

* An acceptor at low enough temperatures is neutral, i.e. deionized in p-type material, the equivalent is true for donors in n-type material

** (Wave number (ν in cm^{-1}) = 1/wavelength (λ in cm) = frequence (f in Hz)/velocity of light (C in cm/sec).)

*** Lasers would improve the situation, however, they are not easily tuned over the necessary wavelength range.

b) The size of the wave functions also produces severe overlapping between impurity atoms down to concentrations of about $10^{10}/cm^3$. This leads to line broadening even in the most lightly doped material, used until the recent days of high-purity germanium. Methods which can take advantage of the extremely small natural width of the hole/electron states in high-purity germanium will be described in the following sections.

We have so far discussed only the optical excitation of holes and electrons from their ground states into excited states. This process attenuates the incident light transmitted by a sample in conventional absorption spectroscopy. To measure this attenuation in high-purity germanium is almost impossible because the absorption is a trivial perturbation in the transmitted light. A much more elegant way of detection uses the effect called photothermal ionization.[4,5,6] If a hole/electron is brought into an excited state through the absorption of a photon (actually a phonon also is needed to satisfy the requirements of conservation of momentum) it may fall back into the ground state but can also be ejected into the valence/conduction band if a phonon of sufficient energy is absorbed. The second process, which clearly becomes more probable at high temperatures leads to an increase in the numbers of free holes/electrons, which modulates the conductivity of the sample. We have now the possibility of measuring directly an effect created by impurity atoms absorbing photons and not a minor change in a large signal as in absorption spectroscopy. In order to obtain a high concentration of phonons of sufficient energy one would like to keep the germanium sample at high temperatures, while, to keep most of the impurities in their neutral state low temperatures would be prefered. This conflict leads to an experimentally-determined optimum temperature of around 8°K for observation of shallow acceptors in p-type germanium. The study of donors in n-type material is complicated by difficulty in making "low noise" metal contacts for electron injection and extraction. Doped n^+ contacts cannot be used because the additional donors would outnumber the donors in the bulk by orders of magnitude unless a method could be found to shield the contacts against the infrared radiation. A suitable geometry might be similar to that used in Hall-effect sample preparation. Measurement of the losses in a microwave cavity would be a possible way to determine the free carrier concentration without any electrical contacts to the sample. Because over 90% of our crystals are mainly p-type our work was concentrated on p-type material where the application of InGa-eutectic on polish-etched surfaces results in very good ohmic contacts down to the temperature of the liquid helium.

EXPERIMENTAL METHODS

Use of an interferometer instead of a spectrograph makes possible measurements of the required sensitivity in a short time. In Fig. 2 the important parts of a Michelson Interferometer are shown. A parabolic mirror M_p creates a parallel light beam from a high pressure mercury arc lamp S. A mylar beam-splitter BS produces two prependicular beams. One is reflected from a plane fixed mirror M_f and the other one from a plane movable mirror M_m. M_m can be moved by a 5 cm long micrometer screw driven by a stepping motor. Both reflected beams are directed back to the beam-splitter to form an outgoing light beam with interference causing a light spectrum determined by the position X of the movable mirror. Only at the position where the distance of both mirrors M_f and M_m from the beam splitter is equal (called "zero path" or "grand maximum") is the outgoing light "white" (i.e. its spectral distribution is that of the radiation source modified by any absorption and beam-splitter characteristic in the interferometer). In any other position the following two equations determine which wavelengths λ will superimpose constructively or distructively:

i) constructive $\quad n\lambda = 2|x| \quad (n = 0,1,2..)$ (1a)

ii) distructive $\quad (2n+1)\frac{\lambda}{2} = 2|x|$ (1b)

where x = 0 corresponds to equality of the two light path lengths BS-M_f and BS-M_m.

The outgoing beam is focused into a 1/2" light pipe (brass or stainless steel tube) mechanically chopped and then filtered with black polyethylene foil (scattering filter) and Yoshinaga filters (Reststrahlen filters).[12] The sample chamber is shown in the right half of Fig. 2. The germanium sample is mounted inside a brass cavity on a brass plate located at the end of the light pipe. A soft stainless steel spring holds the germanium piece. Mylar foils are used as insulators. Indium sheets on both sides of the germanium piece provide a good electrical and thermal contact. The temperature can be measured with a carbon resistor (68 Ω) mounted inside the holder plate directly underneath the sample and controlled by a 25 Ω, 25 W heater resistor outside the cavity. Cooling is achieved with a copper rod reaching into liquid helium and clamped inside a stainless steel tube (thermal resistor).

With this arrangement interferograms (i.e. plots of change of voltage across the sample versus mirror position X) can be recorded. Interferograms are converted into frequency spectra by Fourier Transformation. Figure 3 shows four examples of interferograms and their spectra. Experimenters familiar with network analysis will find strong similarities with the Fourier Transformation of electrical signals between time and frequency domains.

Two specific advantages are realized by the use of an interferometer instead of a spectrograph. (The serious student should read a good introduction for the whole subject such as can be found in Ref. 13.) The Jaquinot (also called throughput) advantage[13] is based on the fact that an interferometer does not contain any narrow apertures and therefore feeds much more energy from the source to the sample. The Fellgett (also called multiplex) advantage[13] has its physical background in the fact that any frequency interval is contained in the outgoing beam not only once as in a spectrograph, but many times. This advantage is especially important in high resolution spectroscopy. Taken together these advantages can multiply to give a factor of 10^5 improvement in signal to noise ratio (and therefore in measuring time) as compared with spectrographs with equal source and resolution.

The two important equations which relate the interferogram to the spectrum are presented here without proof. The maximum wave number ν_{max} in a spectrum is given by the mirror advance ΔX between sampling points.

$$\nu_{max}(cm^{-1}) = \frac{1}{4\ \Delta X(cm)} \qquad (2a)$$

The resolution of the instrument $\Delta\nu$ depends on the total mirror advance X as follows:

$$\Delta\nu(cm^{-1}) = \frac{1}{2\ X(cm)} \qquad (2b)$$

This is true for single sided interferograms with the assumption that full symmetry in respect to zero path can be achieved.

The signal processing and data handling systems are shown schematically in Fig. 4B. Chopped infrared radiation enters the germanium sample causing photothermal excitation which changes the free carrier concentration. The change in voltage across the symmetrically biased sample is amplified with high common-mode rejection and fed into a conventional phase-lock amplifier (PAR model H-8). This unit filters, amplifies and synchronously rectifies the signal. It also controls the chopper motor. A voltage to frequency converter produces a frequency proportional to the signal.

The frequency is measured by counting cycles for a preselectable time (i.e. performs a digital integration). Data are stored in the memory of a PDP-11 computer which also calculates the Fourier Transform. Many data-handling routines, including apodization of spectra, phase correction of interferograms, coaddition, etc. are available to the experimenter. A typewriter, a X-Y plotter or a card puncher can be used to extract the spectrum from the computer. The lower half of Fig. 4 shows a typical interferogram produced by a cube-shaped ($.57/cm^3$) sample #313-0.2.* The net acceptor concentration was about $10^{10}/cm^3$. Because we do not understand details of the signal formation process in the detector we can only state some experimental observations. In general the signal rises with increasing bias across the sample. We attribute this to multiple refilling and excitation of the acceptor states during the time light enters the sample. However, at a certain bias, breakdown occurs and the signal becomes very noisy. The critical value of the bias depends on the net-carrier concentration, sample surface preparation and on the temperature; a few hundred millivolts is a typical value for 8 mm thick samples. The signal amplitude does not depend on chopping frequency from a few cycles per second up to 200 Hz, the limit for the chopper motor. This means that carrier relaxation times in the sample are shorter than ~1 ms ($\omega\ \tau \leq 1$).

EXPERIMENTAL RESULTS AND DISCUSSION

Shallow Acceptors and Donors

As pointed out, aluminum plays the most important role as an impurity in our high-purity germanium.[3] It was found to be the only important impurity in many crystals with net-acceptor concentrations ranging from $>10^{11}/cm^3$ down to a few times $10^9/cm^3$. A spectrum of the sample #313-0.2 containing mostly aluminum is displayed in Fig. 5. The lines of Al (A-G), B(A-G) and Ga(A-G) correspond to those published by R. L. Jones and P. Fisher (Ref. 10) within their experimental errors (~0.2%). The continuum of Al starting at about 10.8 meV is produced by holes which are excited directly from the ground state into the valence band.

The line-widths at half-maximum are limited by the instrument since the total mirror-advance is 2 cm. Equation (2b) predicts a resolution $0.25/cm^1$ (=0.03 meV). As can be seen in Fig. 4, the amplitude of the interferogram for this same sample does not decay to zero even at x = 2 cm. This means that the natural line-width of some lines is smaller than $0.25/cm^1$. For reasons of convenience, and because this resolution allows us to separate all known shallow acceptors, we did not circumvent the limited memory capacity of the on-line computer by recording the interferogram on cards and using a larger computer.

The lines L_1 and L_2 were first thought to correspond to undiscovered transitions. The lines L_3 and L_4 have negative amplitudes reaching below zero. L_1 and L_3 appear at $\pm 10/cm^1$ away from Al(D) and L_2 and L_4 at $\pm 10/cm^1$ from Al(C), the strongest two lines in the whole spectrum. Since one full turn of the mirror advance screw corresponds to 0.5 mm, which is equal to 1 mm light path difference or 10 wave numbers (cm^{-1}), our explanation for the extra lines concentrates on a screw imperfection. Calculation shows that the Fourier Transformation of an interferogram with a periodic modulation of the mirror advance X_{real} results in the first order approximation, in sum and difference of the involved frequencies.* The result also contains the opposite sign of the amplitudes. A further source of "ghost" lines is the nonlinear response of the high-purity germanium samples to the intensity of the exciting light. Taking a quadratic term into account, one finds that the spectrum can contain lines at the sums and differences of all real transitions. This imperfection produces amplitudes having the same sign. From the negative amplitude of the line L_5 occuring at twice the wave number of Al(G) and from spectra going to higher wave numbers, we concluded that the coefficient of the quadratic term is negative. This suggests a saturation effects in the detector. Higher order terms were not investigated. The described sources leading to false lines were present throughout all of our measurements. They explain the presence of most of those weak lines observed in our spectra which were not reported earlier in the literature.

The spectrum obtained from sample #225-(-.9) is shown in Fig. 6. Boron is the dominant impurity. This is easily understood if one recalls the large segregation coefficient k of boron (k_B = 18) and the position where the sample was cut (at ~2% of the initial melt frozen). Sample -4.0 of the same crystal (15% of the initial melt frozen) produces a spectrum with B, Al and Ga lines in equal strength. In sample 15.9 (87% of the initial melt forzen) Ga is the dominant impurity. Because the excited states of all different impurities are equal, the transition probabilities from the excited states into the valency band are also equal. The ratio of corresponding lines of different impurities therefore approximately represents the ratio of their concentrations although a connection must be applied because of the variation of intensity of the exciting light with the wave number. This dependence is weak in the spectral region of the strong D and C lines.

Using this simple fact together with Hall-effect measurements of the samples we can observe the segregation of all three impurities separately along the length of the crystal. A best fit of the experimental data on crystal #225 is displayed in Fig. 7. The segregation coefficients for boron and gallium are very reasonable for the particular crystal growing parameters. The anomalous behavior of aluminum once again is evident.

---

* The first number in the sample identification code refers to the crystal number (313), while the second part (-0.2) is the distance (in cm) from an arbitrary point near the head of the crystal.

* $X_{real} = X_{linear} + a \cos\left(\frac{X_{linear}}{1.0\ mm} \times 2\pi + y\right)$ similar to a frequency modulation.

The quality of spectra obtained with the full resolving power of the instrument is illustrated in Fig. 8 where four impurities are present (sample #291-14.0). The Al(C), in(D) and the Ga(C) lines are clearly separated. Their relative spacings are below 0.1 meV. In addition to the impurities Al, In and Ga, a new unknown shallow acceptor X appears. The relative spacings between the (D), (C) and (B) lines of X are in agreement with the other shallow acceptor lines. We determined the ground state energy $E_{g.s.}$ as 0.18 meV above the ground state of boron, i.e. (10.47 + 0.18) meV. Using the dependence of $E_{g.s.}$ of the group III impurities on atomic number Z (see Ref. 10) one would guess that the Z of X must be in the range of 7 to 9. Since nitrogen (Z = 7), oxygen (Z = 8) and fluorine (Z = 9) are not known to produce shallow acceptor levels, the simple conclusion for the additional lines is not likely to be valid. All impurities outside the group III produce acceptors which can be multiply charged, and have an $E_{g.s.}$ larger than 10 meV. Pairing of single donors with multiple acceptors as described in Ref. 14 for Li, could lead to an analysis of the acceptor X. From measurements of several samples along crystal #291 we conclude that the segregation coefficient of X is somewhat smaller than that of Gallium and lies probably around 0.05. An n-type core makes a more precise estimate based on this particular crystal impossible.

The spectrum of an n-type sample #296-15.0 is shown in Fig. 9. InGa contacts rubbed onto opposite surfaces of the polish-etched cubic sample were used. All the lines can be explained on the basis of phosphorous as an impurity (Ref. 11). Noise in the spectrum is due to current injection noise. Almost no improvement in current injection resulted from using lightly lithium-doped contacts, but this introduced the Li-lines. Only in Hoboken LMC material which was n-type did we find lines corresponding to antimony and to lithium without exposing the material to any heat treatment.

We were pleasantly surprised to discover that the method works also for polycrystalline material. Line splitting is observed in some samples, most probably due to stress, but it is not severe enough to make the analysis of the impurities questionable. The spectrum of a sample of polycrystalline germanium from Sylvania is shown in Fig. 10. As a general result, we find mostly boron and aluminum in the region where the zone is started (clean side). Near the opposite end the boron concentration is much reduced but aluminum and gallium increase. In Sylvania polycrystalline germanium we detect aluminum only as is also true for p-type LMC material from Hoboken. Samples from Eagle Picher Company were n-type and showed phosphorous while the same material, zone refined by the Ontario Research Foundation*, was p-type with boron and gallium.

Other Impurities

In order to test the method for "deep" acceptors we measured the photothermal response of high-purity, dislocation free germanium up to a wave number of $500/cm^1$ (=61.8 meV). This is the upper limit for the instrument available to us. We were able to detect neutral beryllium (Ref. 15) in dislocation-free material (Fig. 11). (P. Fisher, Purdue University, Lafayette drew our attention to this reference.) The same experiment with several samples of dislocated material gave negative results. We assume that the drastically increased number of vacancies and vacancy agglomerates in dislocation-free material[16] enhances the solubility of Be considerably. We detected no neutral copper or other neutral multivalent acceptors or donors in our samples. This seems to be in agreement with the excellent charge collection of the detectors made of our crystals. As soon as we have access to an instrument with a higher wave number limit we plan to extend this method to even deeper-lying impurities. Further plans include double-injection into samples in order to populate both donors and acceptors in p- and n-type material simultaneously. This should yield information on the degree of compensation existing in the germanium.

CONCLUSIONS

We have shown experimentally that the combination of Fourier Transform Spectroscopy (FTS) together with photothermal ionization of neutral impurities makes possible the analysis of acceptors and donors in high-purity germanium down to net-concentrations of $\sim 10^9/cm^3$ (Fig. 12) with a signal to noise ratio >30. With the instrument available to us we did not reach a resolution comparable to the natural line-wdith of shallow acceptors. We believe, however, that a better resolution will not improve the analytical power of the method. Together with Hall-effect, which is the best tool for the measurement of the net-concentrations, the segregation of each impurity separately along the axis of a crystal can be determined. That the method works especially well for shallow acceptors and donors is partially due to the fact that both the current through the sample and the temperatures involved are low. The only deep acceptor detected was neutral beryllium ($E_{g.s.}$ = 24.3 meV). Whether the method will be applicable to deeper levels remains an unanswered question until instruments with a higher maximum wave number ν_{max} are used.

From measurements of over 50 samples we found that aluminum is the main impurity in p-type material. The presence of boron at the seed-end of some crystals can be predicted from the shape of the concentration profile obtained from conductivity measurements.

With the increase of the sample volume we would be able to analyze any impurities producing shallow levels down to the $10^7/cm^3$ range.

ACKNOWLEDGEMENTS

We are indebted to P. L. Richards, University of California, Berkeley and LBL for the extensive use of his instruments and supplies over many months. Without his advice and support, and the assistance of many of his students (R. Auerbach, J. Mather and D. Woody) we could not have obtained the reported results in such a short time. Special thanks go to P. Fisher and A. K. Ramdas, Purdue University, Lafayette for the valuable discussions on the subject of semiconductor spectroscopy. We would like to thank F. S. Goulding for his steady interest in our work and his assistance in the preparation of the manuscript. R. Pehl and P. Glasow* contributed with suggestions and many discussions.

* This and other samples were kindly supplied by I. L. Fowler, Atomic Energy of Canada, Limited, Chalk River Nuclear Laboratories.

* On leave of absence from Siemens Research Laboratories, Erlangen, W. Germany.

REFERENCES

1. Hall, R. N., Baertsch, R. D., Soltys, T. J. and Petrucco, L. J., "High-Purity Germanium for Gamma Detectors", General Electric Co. Annual Reports Numbers 1 through 5.

2. Haller, E. E., Hansen, W. L. and Goulding, F. S., IEEE Trans. Nucl. Sci., 20, No. 1, 481 (1973).

3. Hansen, W. L. and Haller, E. E., IEEE Trans. Nucl. Sci., 21, No. 1, (1974) to be published.

4. Lifschitz, T. M. and Ya.Nad', F., Sov. Phys. Doklady, 10, No. 6, 532 (1965).

5. Sidorov, V. I. and Lifshitz, T. M., Sov. Phys. Solid State, 8, No. 8, 2000 (1967).

6. Kogan, Sh. M. and Sedunov, Sov. Phys. Solid State, 8, No. 8, 1898 (1967).

7. Seccombe, S. D. and Korn, D. M., Solid State Comm., 11, 1539 (1972).

8. Kohn, W. in Solid State Physics , Vol. 5, Academic Press, New York, 257 (1957).

9. Fisher, P. and Ramdas, A. K. in Physics of the Solid State, Academic Press, London, 149 (1969).

10. Jones, R. L. and Fisher, P., J. Phys. Chem Solids, 26, 1125 (1965).

11. Reuszer, J. H. and Fisher, P., Phys. Rev., 135, A1125 (1964).

12. Yamada, Y. Mitsuishi, A. and Yoshinaga, H., J. Opt. Soc. America, 52, No. 1, 17 (1962).

13. Bell, R. J., in Introductory Fourier Transform Spectroscopy, Academic Press, New York (1972).

14. LoVecchio, P., "Lithium-Multivalent Acceptor Impurity Interaction in Germanium", Thesis, Syracuse University (1972).

15. Shenker, H., Swiggard, E. M. and Moore, W. J., Trans. Metal, Soc. of AIME, 239, 347 (1967).

16. Tweet, A. C., J. Appl. Phys. 30, No. 12, 2002 (1959).

FIGURE CAPTIONS

Fig. 1. The bound states of the group III impurities in germanium. Energies of the states and the labeling of the transitions are the same as in Ref. 10.

Fig. 2A. Basic elements of an Infrared Michelson Interferometer. S light source; M_p parabolic mirror; BS beam splitter; M_f fixed mirror; M_m movable mirror (mirror position X); Ch light chopper. The instrument is evacuated to avoid absorption of the IR-light by water vapor.

Fig. 2B. IR-cavity in helium cryostat.

1. Helium dewar (glass) with liquid nitrogen jacket.
2. Liquid Helium.
3. Copper Rod for cooling.
4. External 25 Ω/25 Watt resistor for temperature control.
5. Brass cavity.
6. High-purity germanium samples.
7. Carbon resistor for temperature measurement.
8. Stainless steel spring that gently holds the sample in position.

Fig. 3. Four schematic interferograms and their spectra:

a) A δ-response at zero-path is transformed into a spectrum containing all wave numbers.

b) A cosine with decaying amplitude corresponds to a "broad" line.

c) A cosine with constant amplitude results in one sharp line.

d) A cosine with a "beating" amplitude produces two sharp lines.

Fig. 4A. Interferogram obtained from sample #313-.2. Sample volume = .57/cm^3; $N_A - N_D = 10^{10}$/cm^3; T = 8.0°K; 1000 sampling points were recorded in approximately 30 minutes. The "beat" character of the interferogram is produced by the strong Al(C) and Al(D) lines.

Fig. 4B. Signal processing and data handling system used in connection with the interferometer. The germanium sample simultaneously acts as absorber and detector of IR-radiation.

Fig. 5. Spectrum of sample #313-.2. The labeling of the lines is the same as in Ref. 10. Sample volume = .57/cm^3; $N_A - N_D = 10^{10}$/cm^3; T = 8.0°K; 1000 sampling points were recorded in approximately 30 minutes. A region below the Al(D) line is magnified by a factor of four with the baseline shifted. The aluminum concentration exceeds all other impurities (B, Ga) by a factor of more than 20. The explanation for the lines L_1 through L_5 is given in the text.

Fig. 6. Spectrum of sample #225-(-.9) containing B, Al and Ga. Sample volume .58/cm^3; $N_A - N_D \approx 10^{11}$/cm^3; T = 8.0°K, 1000 sampling points were recorded in 25 minutes.

Fig. 7. Axial impurity concentration profile of crystal #225. The upper broken curve was obtained from conductivity--small circles--and Hall-effect measurements (⊕). The Hall-mobilities on the whole slices did not indicate any radial variation of $N_A - N_D$. The solid curves represent the segregation of B, Al and Ga; their concentration ratios were derived from FTS spectra.

Fig. 8. Spectrum of sample #291-14.0. Sample volume = .47/cm^3; $N_A - N_D = 10^{11}$/cm^3; T = 8.0°K; 1024 sampling points were recorded in 30 minutes. Four impurities are present: X (unknown), Al, Ga and In. The resolution allows the separation of the Ga(C) and In (D) lines.

Fig. 9. Spectrum of the n-type sample #296-15.0. Sample volume = .42/cm^3; $N_D - N_A = 6 \times 10^{11}$/cm^3; T = 6.5°K; 700 sampling points were recorded in approximately 30 minutes. Phosphorous is the only detectable donor impurity in our n-type material.

Fig. 10. Spectrum of a polycrystalline germanium sample (Sylvania). Sample volume = .43/cm^3; $N_A - N_D$ is unknown, but below 10^{12}/cm^3; T = 8.0°K; 1000 sampling points were recorded in 25 minutes. Line-splitting is only observed in polycrystalline samples (built in stress).

Fig. 11. Spectrum of sample #249-(-.8). Sample volume = .25/cm^3; $N_A - N_D \approx 10^{10}$/cm^3 (shallow levels); T = 14.0°K; 500 sampling points were recorded in 15 minutes. The lines of neutral beryllium are dominant. The Al lines are still visible even though over 99% of the Al-acceptors are ionized at 14.0°K.

Fig. 12. Spectrum of sample #153-(-1.9). Sample volume = .52/cm ; $N_A - N_D$ = 10/cm ; T = 8.0°K; 1000 sampling points were recorded in 25 minutes. The signal-to-noise ratio is larger than 30.

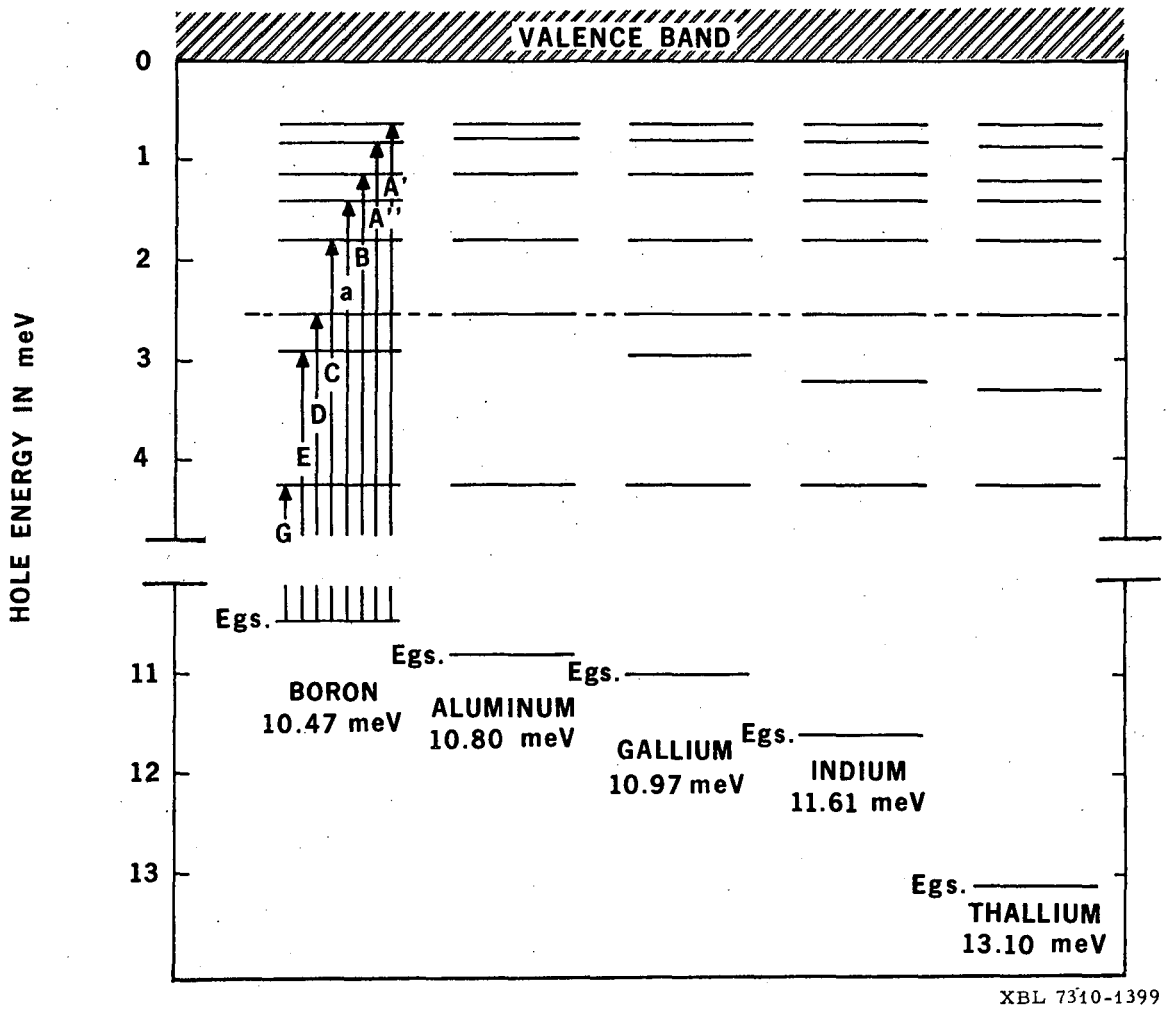
VALENCE BAND
HOLE ENERGY IN meV
0
1
2
3
4
11
12
13
A'
A''
B
a
C
D
E
G
Egs.
BORON
10.47 meV
ALUMINUM
10.80 meV
GALLIUM
10.97 meV
INDIUM
11.61 meV
THALLIUM
13.10 meV
XBL 7310-1399

Fig. 1

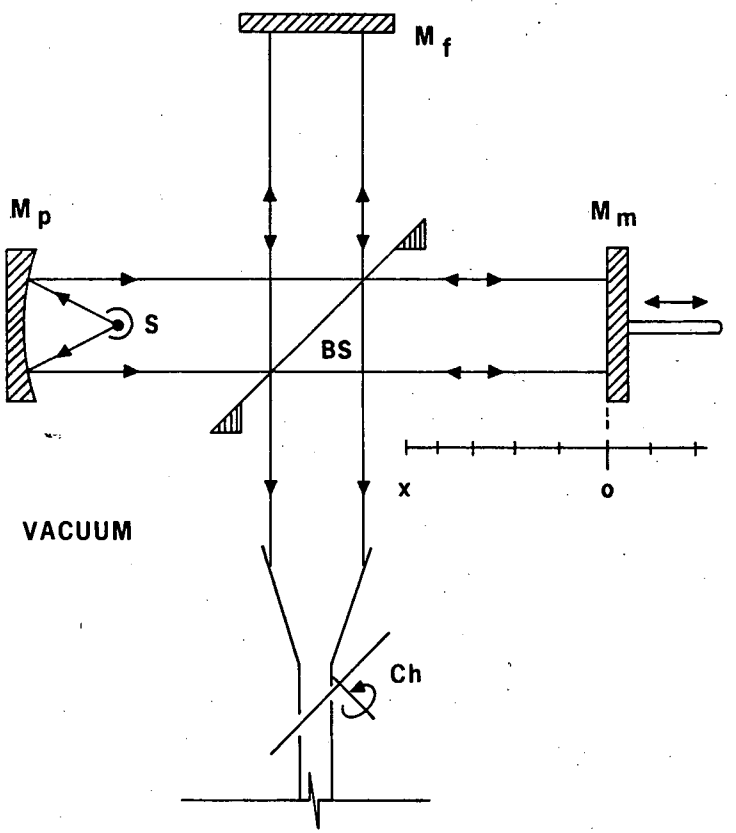

A.

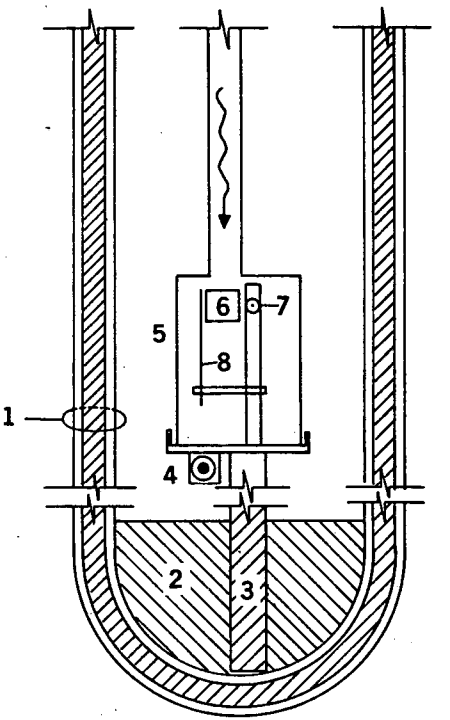

B.

XBL 7311-1400

Fig. 2

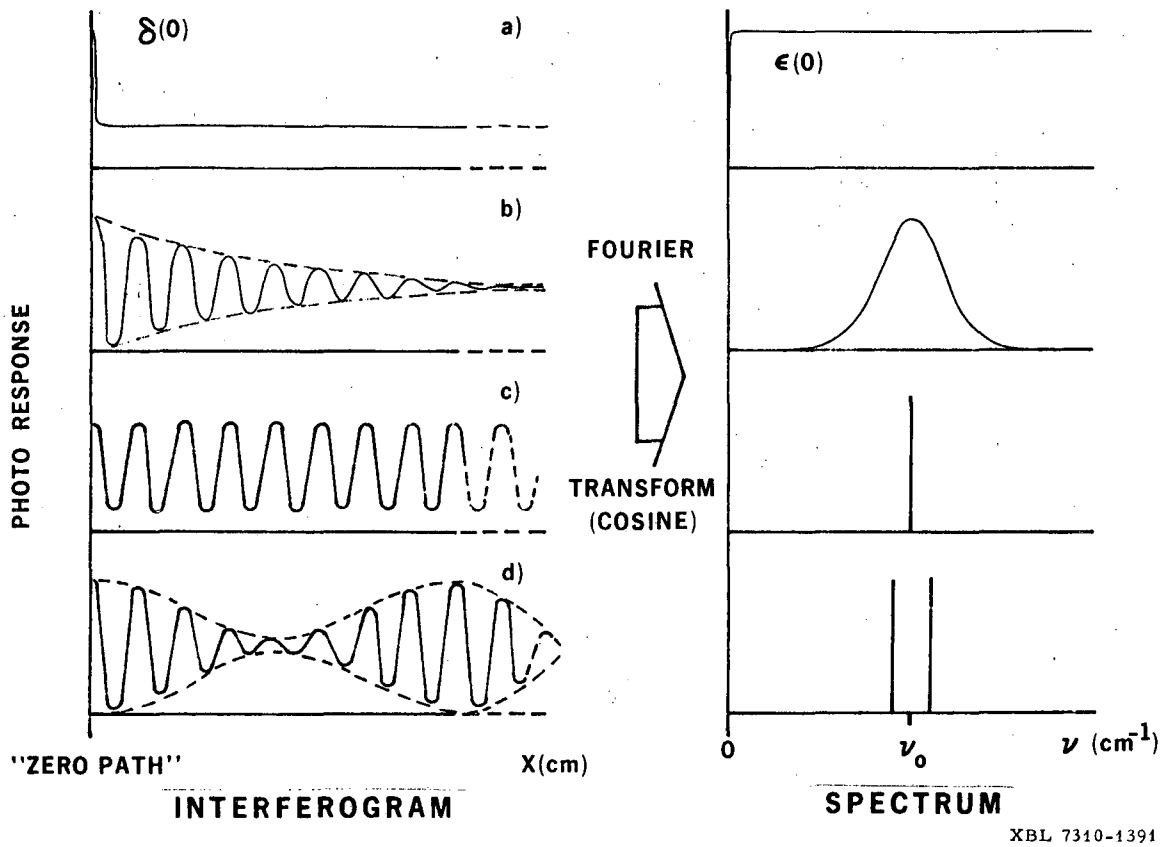
δ(0)
a)
b)
c)
d)
PHOTO RESPONSE
"ZERO PATH"
X(cm)
INTERFEROGRAM
FOURIER
TRANSFORM
(COSINE)
ε(0)
0
ν₀
ν (cm⁻¹)
SPECTRUM
XBL 7310-1391

Fig. 3

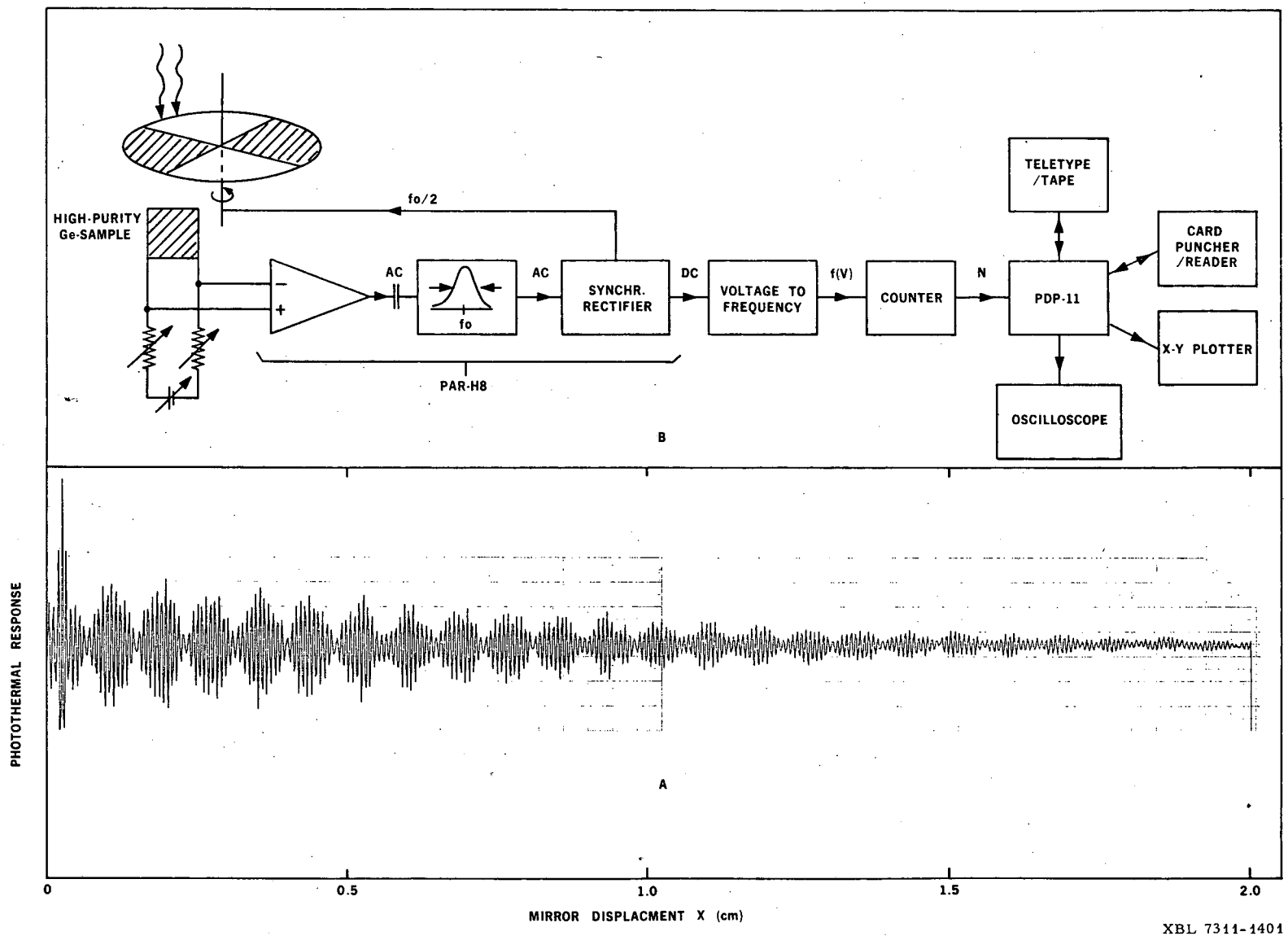

XBL 7311-1401

Fig. 4

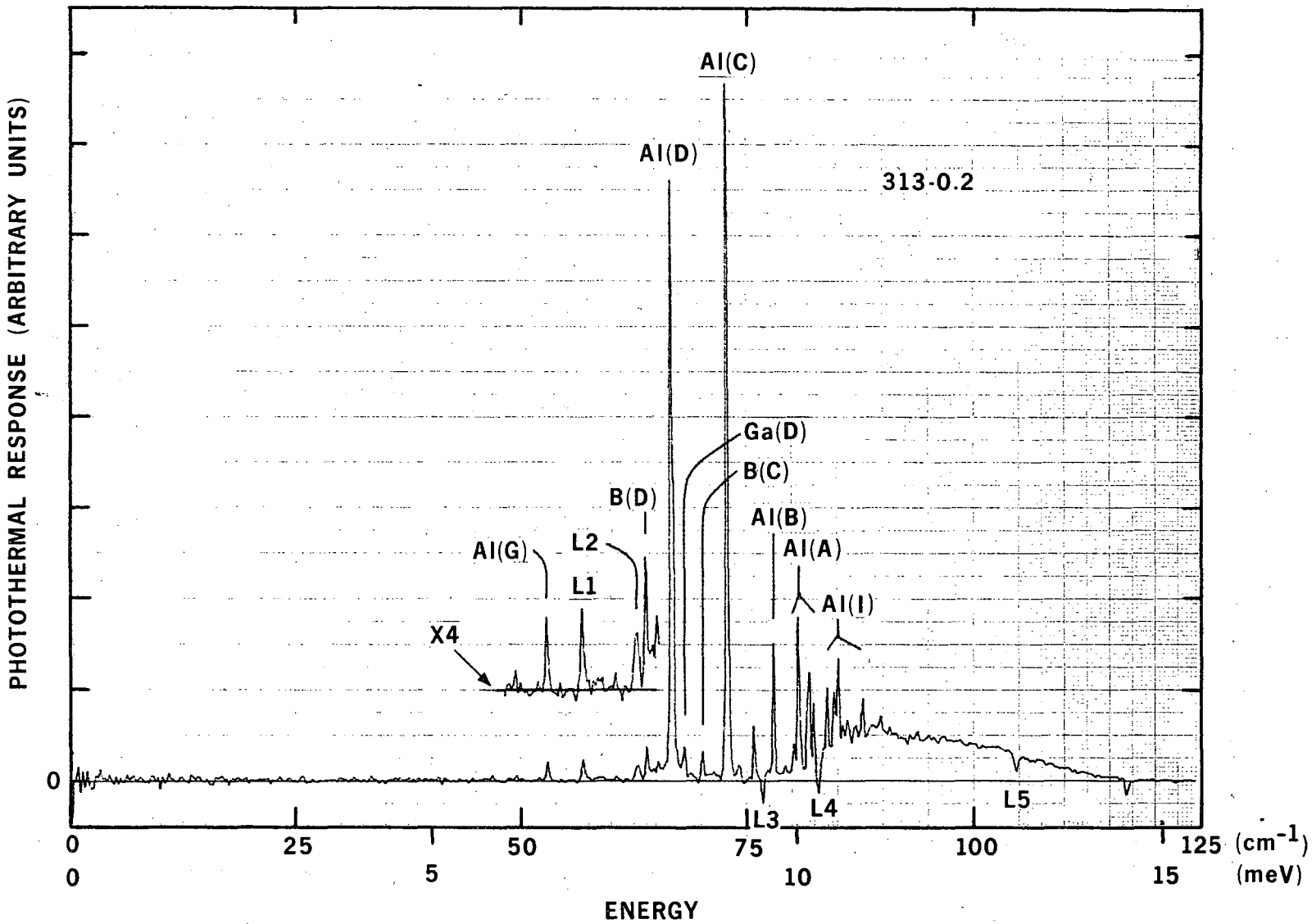

XBL 7310-1392

Fig. 5

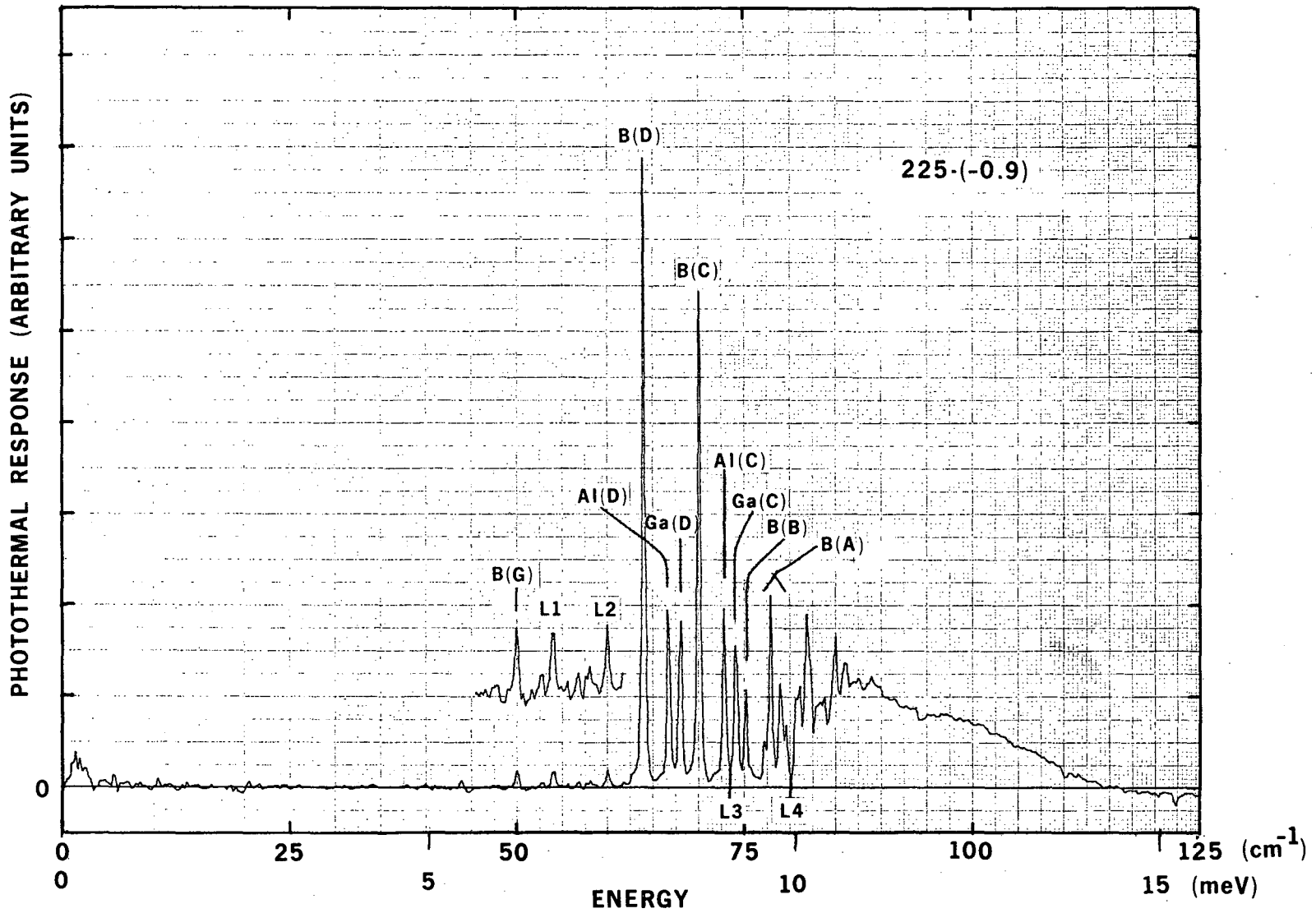

XBL 7310-1397

Fig. 6

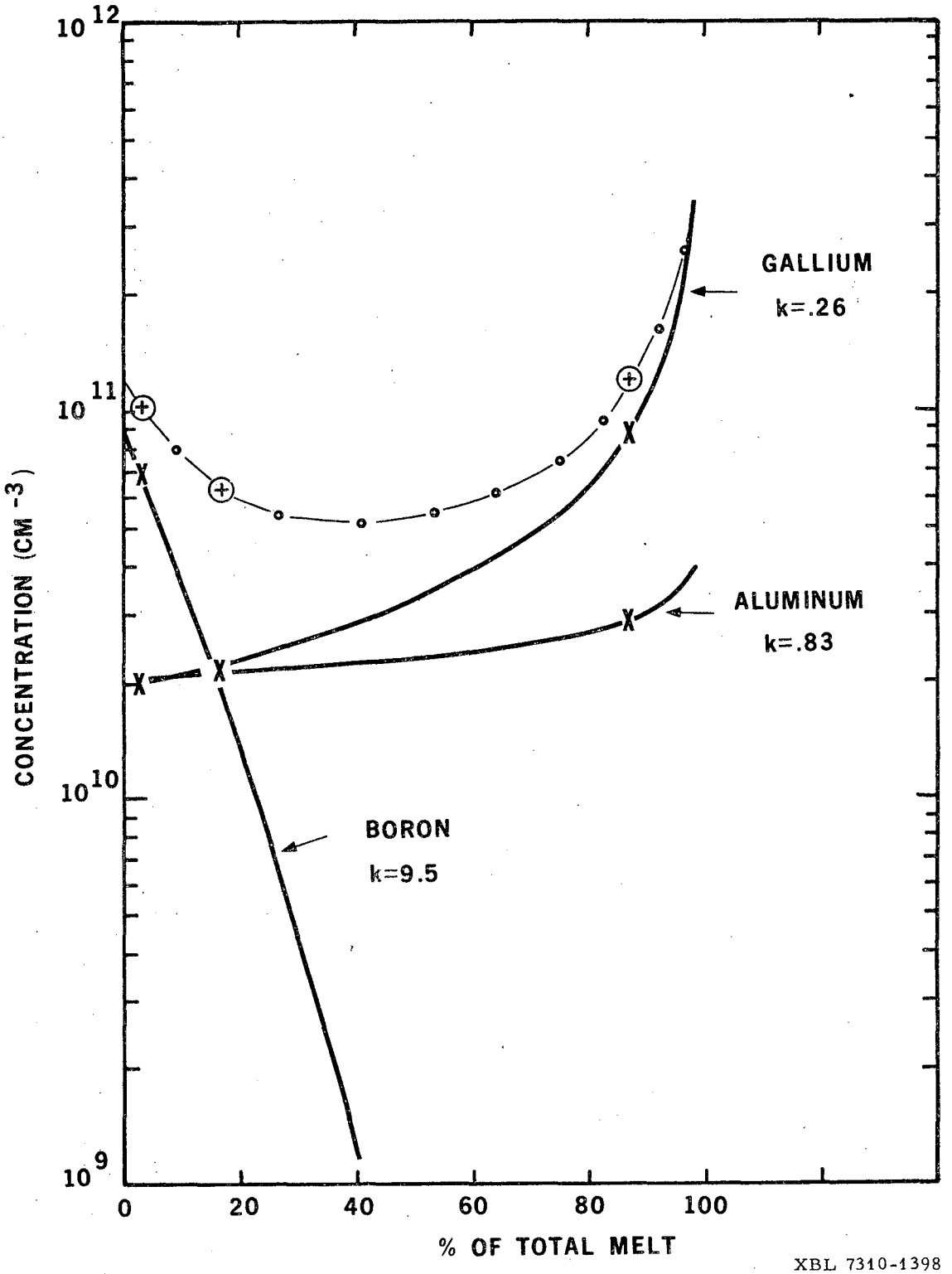
10^{12}
10^{11}
10^{10}
10^{9}
CONCENTRATION (CM $^{-3}$)
0
20
40
60
80
100
% OF TOTAL MELT
GALLIUM
k=.26
ALUMINUM
k=.83
BORON
k=9.5
XBL 7310-1398

Fig. 7

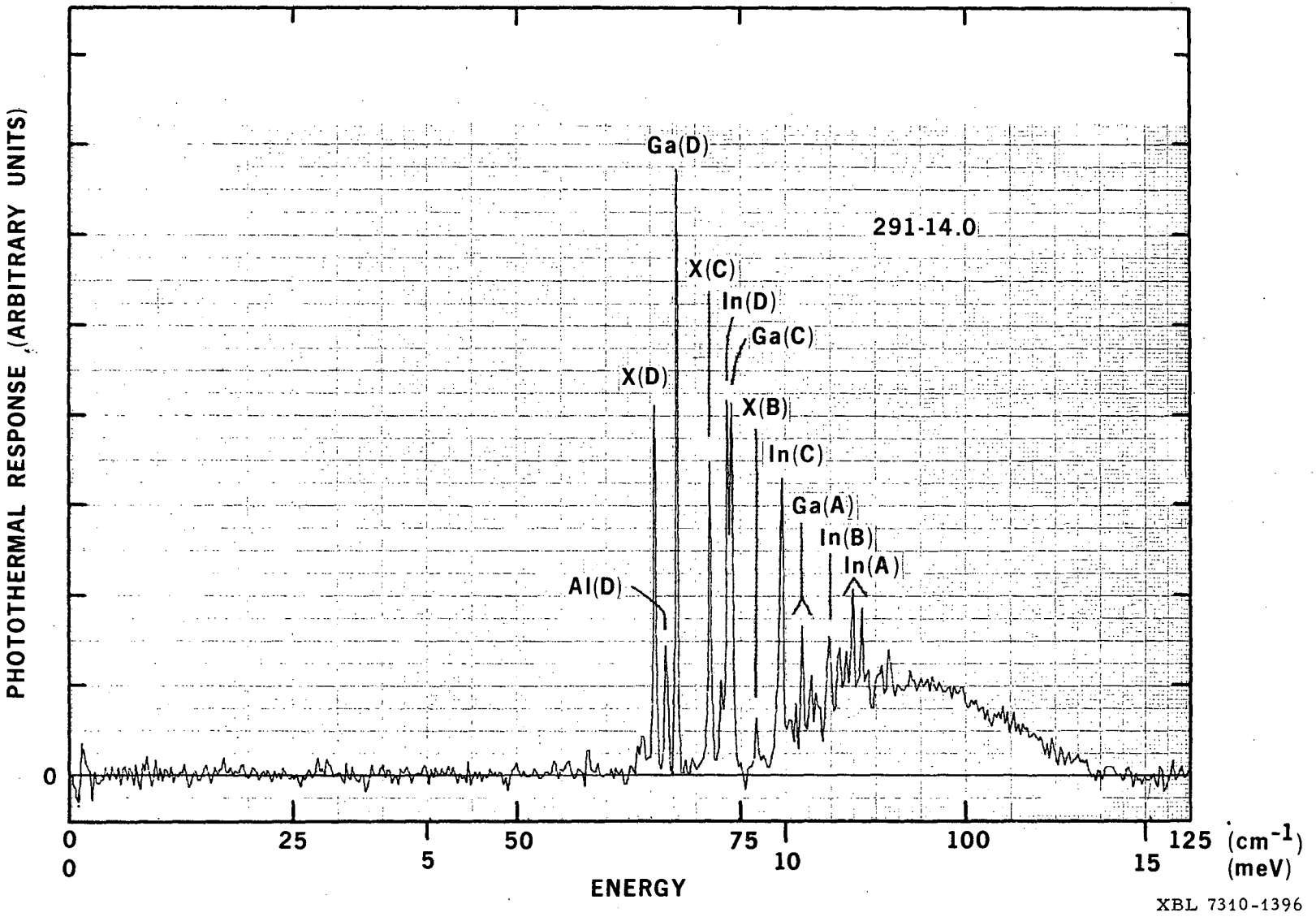
PHOTOTHERMAL RESPONSE (ARBITRARY UNITS)
0
Ga(D)
291-14.0
X(C)
In(D)
Ga(C)
X(D)
X(B)
In(C)
Ga(A)
In(B)
In(A)
Al(D)
0
25
50
75
100
125
(cm^{-1})
0
5
10
15
(meV)
ENERGY
XBL 7310-1396

Fig. 8

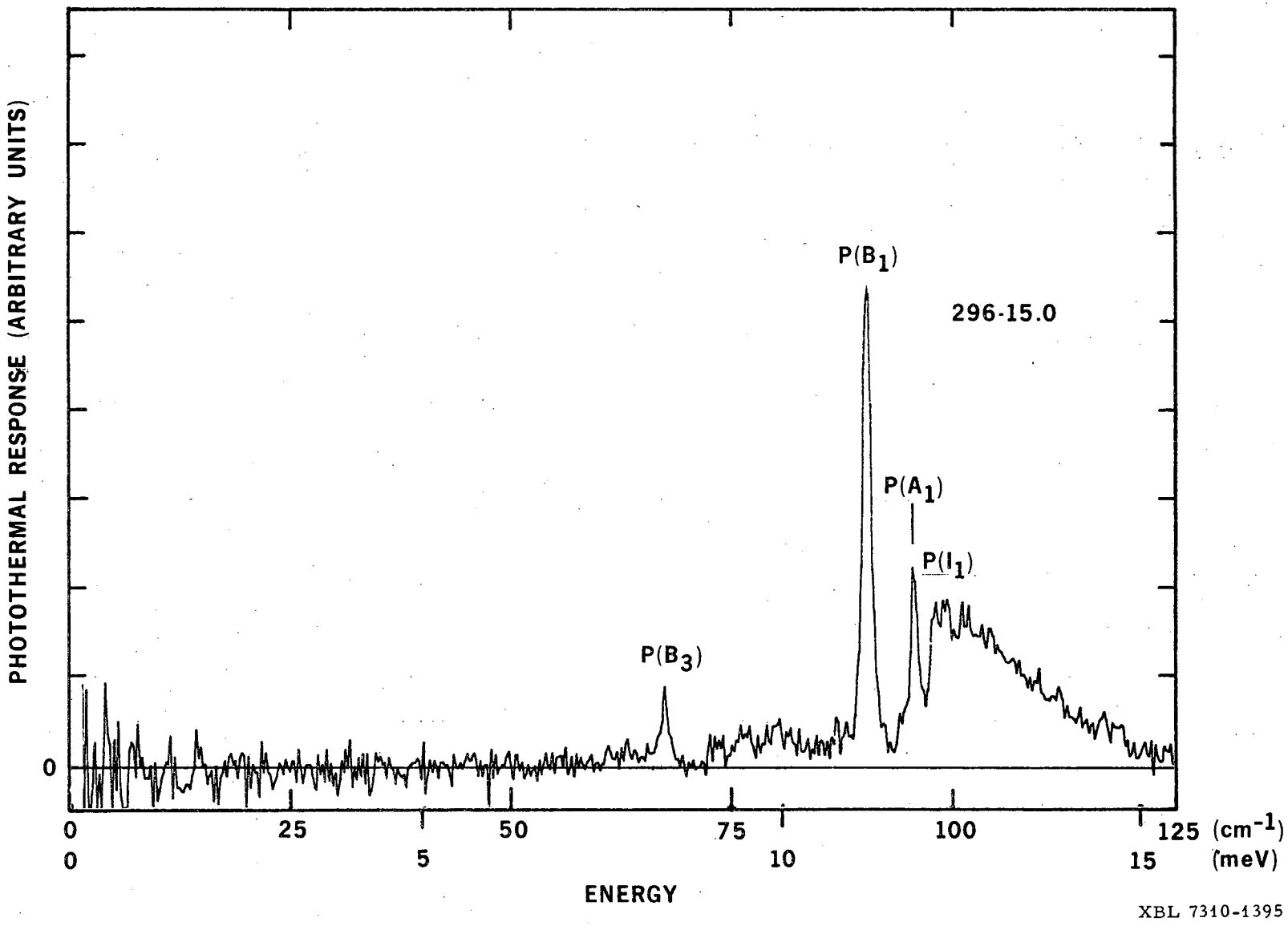
PHOTOTHERMAL RESPONSE (ARBITRARY UNITS)
0
P(B1)
296-15.0
P(A1)
P(I1)
P(B3)
0
25
50
75
100
125 (cm-1)
0
5
10
15 (meV)
ENERGY
XBL 7310-1395

Fig. 9

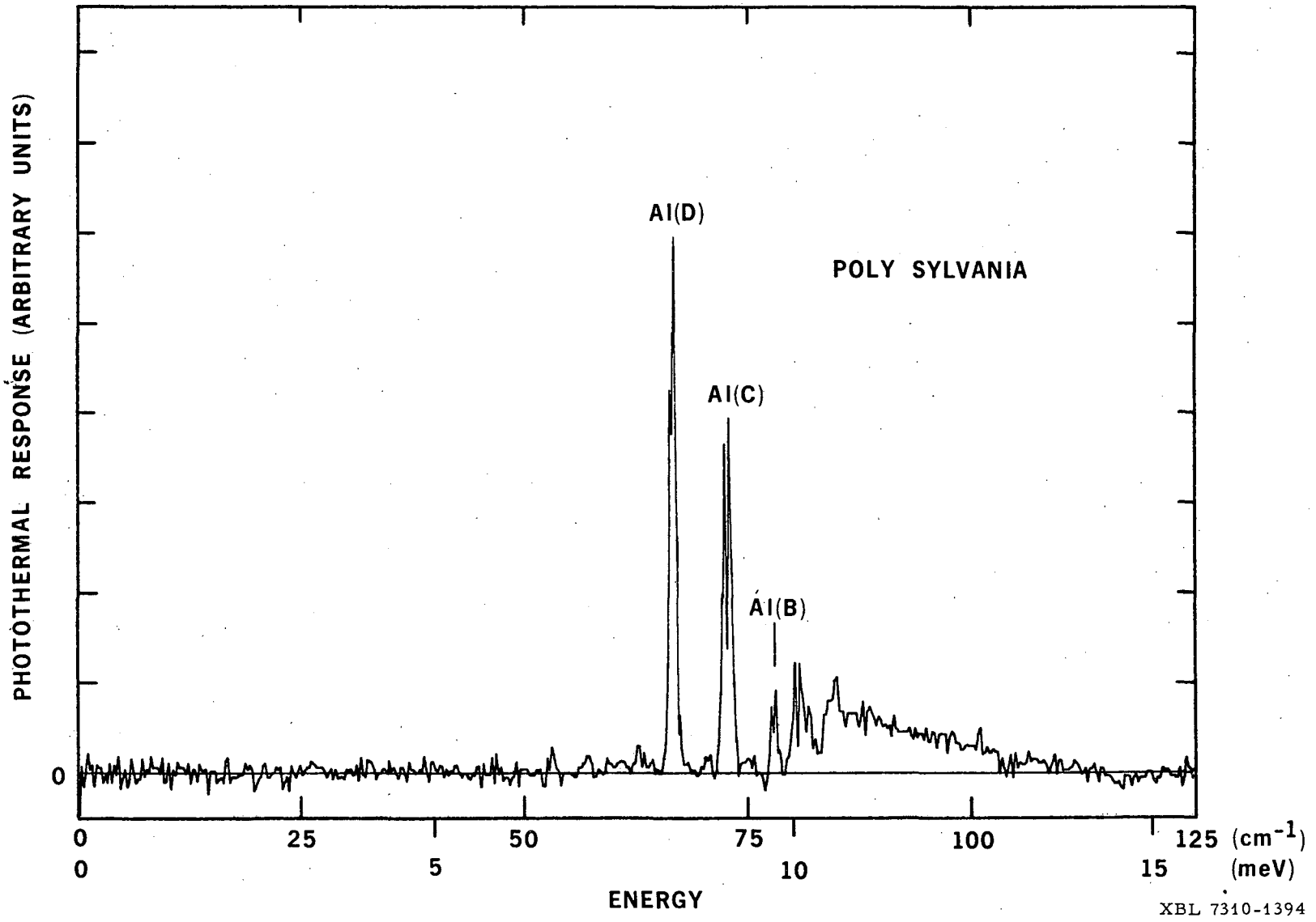
PHOTOTHERMAL RESPONSE (ARBITRARY UNITS)
0
Al(D)
Al(C)
Al(B)
POLY SYLVANIA
0
25
50
75
100
125 (cm-1)
0
5
10
15
(meV)
ENERGY
XBL 7310-1394

Fig. 10

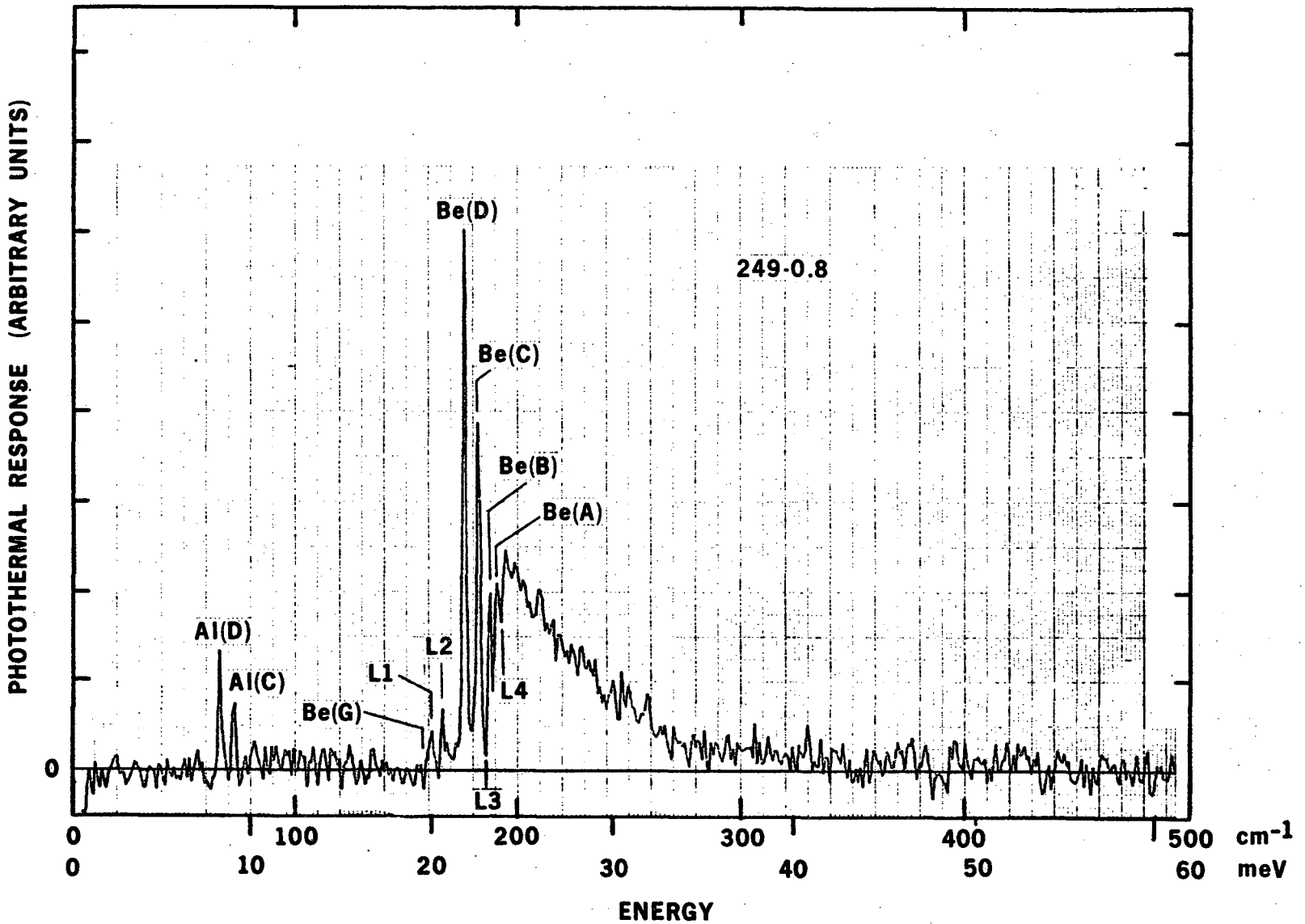

XBL 7311-1430

Fig. 11

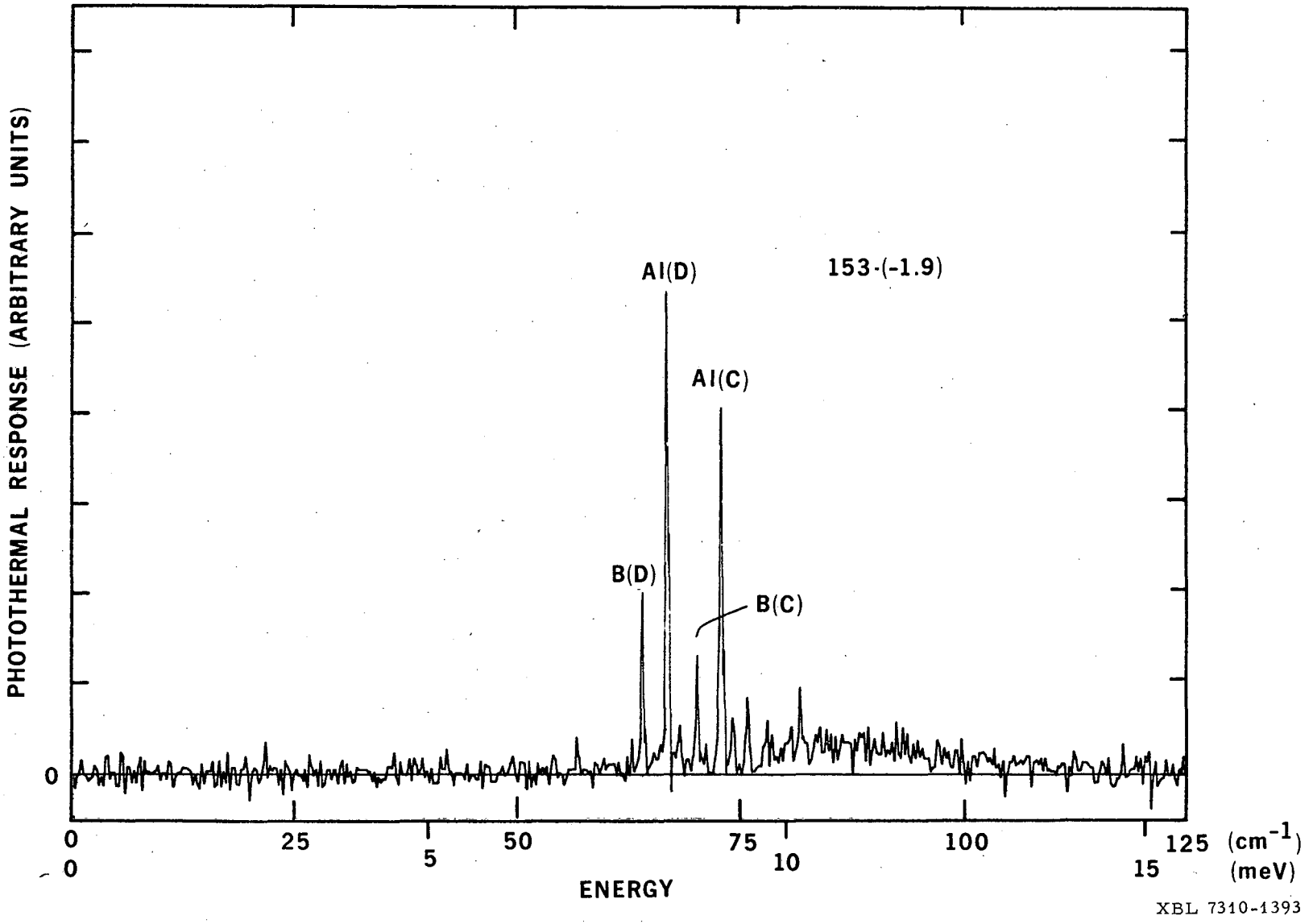
PHOTOTHERMAL RESPONSE (ARBITRARY UNITS)
0
Al(D)
153-(-1.9)
Al(C)
B(D)
B(C)
0
25
50
75
100
125
(cm^{-1})
0
5
10
15
(meV)
ENERGY
XBL 7310-1393

Fig. 12

LEGAL NOTICE

This report was prepared as an account of work sponsored by the United States Government. Neither the United States nor the United States Atomic Energy Commission, nor any of their employees, nor any of their contractors, subcontractors, or their employees, makes any warranty, express or implied, or assumes any legal liability or responsibility for the accuracy, completeness or usefulness of any information, apparatus, product or process disclosed, or represents that its use would not infringe privately owned rights.

TECHNICAL INFORMATION DIVISION
LAWRENCE BERKELEY LABORATORY
UNIVERSITY OF CALIFORNIA
BERKELEY, CALIFORNIA 94720