Submitted to Analytical Chemistry

LBL-2441
Preprint c.2

TWO-CHAMBER FURNACE FOR FLAMELESS ATOMIC ABSORPTION SPECTROSCOPY

D. A. Church, T. Hadeishi, L. Leong,
R. D. McLaughlin and B. D. Zak

RECEIVED
LAWRENCE
RADIATION LABORATORY

JAN 22 1974

LIBRARY AND
DOCUMENTS SECTION

November 1973

Prepared for the U. S. Atomic Energy Commission
under Contract W-7405-ENG-48

TWO-WEEK LOAN COPY

This is a Library Circulating Copy which may be borrowed for two weeks. For a personal retention copy, call Tech. Info. Division, Ext. 5545

LAWRENCE BERKELEY LABORATORY
UNIVERSITY OF CALIFORNIA
BERKELEY

LBL-2441
c.2

DISCLAIMER

This document was prepared as an account of work sponsored by the United States Government. While this document is believed to contain correct information, neither the United States Government nor any agency thereof, nor the Regents of the University of California, nor any of their employees, makes any warranty, express or implied, or assumes any legal responsibility for the accuracy, completeness, or usefulness of any information, apparatus, product, or process disclosed, or represents that its use would not infringe privately owned rights. Reference herein to any specific commercial product, process, or service by its trade name, trademark, manufacturer, or otherwise, does not necessarily constitute or imply its endorsement, recommendation, or favoring by the United States Government or any agency thereof, or the Regents of the University of California. The views and opinions of authors expressed herein do not necessarily state or reflect those of the United States Government or any agency thereof or the Regents of the University of California.

TWO-CHAMBER FURNACE FOR FLAMELESS ATOMIC ABSORPTION SPECTROSCOPY*

D. A. Church, T. Hadeishi, L. Leong, R. D. McLaughlin, and B. D. Zak

Lawrence Berkeley Laboratory, University of California, Berkeley, California 94720

November 1973

ABSTRACT

The construction and operation of a two-chamber furnace for flameless atomic absorption measurements on volatile elements is described. The furnace consists of a combustion chamber and an absorption tube. The solid, liquid, or gaseous sample is introduced by means of a sample holder into the combustion chamber, maintained at an appropriate temperature, where combustion and dissociation occur in a stream of oxygen. The element of interest is carried by the gas stream into the absorption tube, where it is detected. Relatively large volumes or weights of sample containing volatile elements can be measured in this way without drying and ashing steps which might lead to loss of these elements. An application to trace mercury detection using the IZAA spectrometer is discussed.

I. INTRODUCTION

In order to successfully measure trace element concentrations by an atomic absorption (AA) technique, the sample must be reproducibly vaporized and dissociated so that the element of interest can absorb the incident resonance light. Flameless AA measurements are often carried out by placing the sample in a carbon tube, through which the light beam passes. The carbon tube, when heated, serves as a furnace (1) to vaporize and dissociate the sample. With such a furnace, it is generally necessary to carry out drying or ashing steps prior to atomizing the sample, in order to obtain meaningful results. If the sample element to be measured is volatile, or exists in volatile compounds, as do mercury, arsenic, and selenium, these drying and ashing steps may well lead to loss of this element before the actual measurement.

As a means of circumventing these procedures, we describe a furnace consisting of two heated chambers, which does not suffer from the deficiencies mentioned above. The sample is introduced into the first (combustion) chamber in a holder, along with a stream of carrier gas (Figure 1). Rapid conductive and radiative heating of the sample holder vaporizes the sample. An oxidizing carrier gas not only assists with the combustion of the sample, reducing smoke and other interferences, but also carries the dissociated constituents reproducibly into the light beam. Following the short residence time in the windowless absorption tube, the sample vapor is vented to the surrounding atmosphere. We have tested such a furnace as a component of the Isotope-shift Zeeman-effect Atomic Absorption (IZAA) spectrometer(2-4)

applied to the measurement of trace quantities of various organic and inorganic compounds of mercury in solid, liquid, and gaseous samples. Such individual measurements can be performed in less than one minute, without chemical preparation of the sample.

II. APPARATUS

The IZAA spectrometer(2-4) consists of three basic components: a single light source which provides both a signal monitor beam and a reference beam; the two-chambered furnace; and a detector composed of a polarization analyzer, interference filter, and photomultiplier. The light source incorporates an electrodeless discharge lamp containing a mercury isotope vapor in a uniform external magnetic field, and a means of alternately selecting the orthogonally polarized constituents of the light emitted perpendicular to the field direction. The wavelength of one of these constituents is centered on the Lorentz-broadened and -shifted absorption(5) of natural mercury in air; the other constituent consists of two Zeeman-shifted lines which are symmetrically displaced about 1 cm^{-1} from the central monitor line(4). These two shifted lines, on the wings of the absorption curve, serve as a reference beam to correct for broad-band interferences. An electromagnetically actuated phase retardation plate(4, 6) permits the two orthogonally polarized constituents to pass the analyzer to the detector alternately at a frequency of several hundred hertz. An automatic gain control circuit corrects for variations in the total light level reaching the detector, produced by broad-band interferences. The signal arises from a difference of detected intensity of the monitor and reference constituents; this difference is produced by mercury

absorption only. The difference signal is amplified, converted to a dc voltage, and integrated. The integrated signal of an unknown is compared to that of a standard, to determine the mercury concentration.

Our implementation of the basic two-chambered furnace design for the IZAA mercury detector consists of a stainless steel shell in a "T" shape as shown in Figure 1, which is directly heated by an ac current and indirectly heated by heating elements. The combustion chamber volume V_c is connected to the absorption tube volume V_a by a multi-orifice insert; this permits a more uniform distribution of combusted sample over the absorption tube cross section. The sample holder consists of a platinum cup, mounted by four platinum wires to a thin-wall stainless steel tube. The carrier gas is blown both through the tube and around the tube from the inlet near the mouth of the furnace, as indicated in Figure 1. The gas flow prevents back-diffusion of sample to the cool inlet portion of the furnace. The platinum cup also tends to direct products of rapid combustion toward hotter regions of the furnace. With many liquid samples, an argon carrier gas is found to be adequate. However, oxygen is necessary for the combustion of most solids, to reduce the load of interfering smoke which otherwise totally blocks the light beam. To maintain linearity over a relatively large range of sample volumes, it is necessary that the gas flow rate be large compared with the volume of gas generated in vaporizing the sample. Liquid samples in the range of 20-50 μl can be run before significant errors are detected. Of course, the use of such a gas flow system involves dilution of the sample; nevertheless, we observe a basic detection limit of at least 0.1 ng for mercury with our current

apparatus. This is comparable to the detection limit of other AA systems using conventional carbon tube furnace designs.

In the temperature range 850-1000°C, the furnace is sufficiently hot and the heat capacity of the sample holder sufficiently low that the sample is rapidly vaporized. The signal typically appears in time as a smooth peak with a duration of several seconds (Figure 2). The signal peak for higher volatility liquid samples has the same general appearance as that for samples of lower volatility, but it may appear somewhat sooner after the sample holder is inserted. This effect is particularly pronounced at lower temperatures. The same typical signal appearance is also noted for solid and gaseous samples.

Based on simple assumptions, the approximate time dependence of such a signal can be predicted. Suppose the sample to contain a number of mercury atoms N, whether in elemental or molecular form. If the sample is vaporized rapidly compared to the flow rate R of carrier gas through the system, the liberation of mercury atoms into the combustion chamber can be considered instantaneous. The relatively large impedance to gas flow into the absorption tube aids mixing in the combustion chamber, and time averages the gas spike produced by the sample vaporization. If complete mixing occurs, the rate of increase of atoms in the absorption tube N_a is

$$dN_a/dt = (NR/V_c)\, e^{-Rt/V_c}. \qquad (1)$$

Again with the assumption of complete mixing, atoms are removed from the absorption tube at the rate

$$dN_a/dt = -\,(R/V_a)\, N_a(t)\,. \qquad (2)$$

The net density of mercury atoms in the absorption tube, as a function of time t and initial atom number N, is

$$N_a(t)/V_a = \frac{N}{(V_c - V_a)}\left(e^{-Rt/V_c} - e^{-Rt/V_a}\right), \qquad (3)$$

which has a time dependence in adequate agreement with the signal generally observed. Particularly in the case of insufficiently rapid heating, departures from this simple shape are observed when mixtures of compounds with markedly different volatilities are investigated. These effects can be predicted by taking the sample vaporization rate into account. This situation can be eliminated by more rapid sample heating, to drive off all constituents at nearly the same instant.

III. PROCEDURE AND RESULTS

We report here the results of measurements of mercury concentrations in solid and liquid samples. The results of measurements of gaseous samples are reported elsewhere(4), as are measurements using an earlier version of the IZAA spectrometer on fish samples(3). For the case of liquid samples, measurements were made to check for any chemical or matrix effects which might influence the measurements. Also, the physical parameters of the measurements were varied, in order to better understand the limits and capabilities of the furnace. Such detailed measurements for solid samples are still in progress.

The solid samples investigated to date include animal and fish muscle, dried and fresh plant leaves and stems, hair, blood, sediments, powdered ceramic, and NBS standard samples. The procedure with solid samples was either to first weigh the sample in a platinum boat

boat which was then placed in the sample holder, or to weigh the sample directly in the holder. For a given gas flow rate (typically 400 ml/min) a primary limitation on the weight of solid sample to be run is related to the volume of oxygen available for combustion. When the sample weight approaches a limit proportional to gas flow rate, smoke from the sample begins to be observed. Small increases in sample weight then lead to a large increase in smoke, which eventually attenuates the light beam beyond the capability of the IZAA automatic gain control to function correctly. In practice, we limited sample weight so that no more than 10% of the incident light was obscured by smoke. As Equation (2) shows, increasing the gas flow rate decreases the dwell time of the atoms in the absorption tube, and hence the signal. Consequently, increases in sensitivity cannot be achieved by increasing both sample weight and gas flow. However, we have found that relatively large sample weights can usually be handled, since smoke is not always a limitation. Sample weights in the 20-30 mg range or higher are routinely run. This relatively high sample weight permits precise control of sample size, and makes it possible to extend measurements to lower concentrations of mercury. Results of measurements on calibrated solid samples are presented in Table I.

Measurements with standard solutions were first carried out over a range of sample volumes in 5 μl steps at a given mercury concentration. Strict linearity to at least 20 μl was observed. Next, a plot of signal vs. concentration with a given (5 μl) volume sample showed linearity for mercury sample weights of 0.1 ng to more than 50 ng. To test for systematic effects, the following measurement parameters

were varied: (1) CuO was introduced with the liquid standard to provide excess oxygen, (2) the oxygen carrier gas was replaced with argon to produce an oxygen deficiency, (3) the pH of the standard solution was varied over an order of magnitude from 0.03N to 0.3N, (4) the anion of the standard solution was changed from Cl^- to $SO_4^=$, (5) organic mercury solutions and inorganic mercury standards were separately measured, and then separately added to the sample holder and the results checked for additivity, (6) additivity was checked for mixed organic and inorganic mercury solutions, and (7) the oven temperature was varied over the range 850 °C to 1010 °C. The measurement results showed additivity for inorganic and organic samples under all conditions, and no dependence on the chemical parameters varied. Results of selected measurements are presented in Table II.

IV. SUMMARY

The two-chamber furnace offers a useful and accurate means for reproducibly vaporizing, combusting, and dissociating samples in solid, liquid, or gaseous form containing volatile elements. An oxidizing carrier gas serves both as an aid to combustion of the sample and as a means for reproducibly carrying the vaporized sample from the combustion chamber to the absorption tube. Consequently, no prior chemical sample preparation is required for solid samples, and drying and ashing cycles are not necessary. Sample measurement times are reduced to about one minute. Solid sample weights in the tens of mg can be handled. When employed with the IZAA spectrometer, the automatic background correction permits the measurement of samples in the presence of residual interferences and smoke.

Footnote and References

*Research supported by NSF RANN Grant AG396 and in part by the U. S. Atomic Energy Commission.

1. B. V. L'Vov, "Atomic Absorption Spectrochemical Analysis," translated by J. H. Dixon, Adam Hilger Ltd., London, 1970, p. 213.

2. T. Hadeishi and R. D. McLaughlin, Science, 174, 404 (1971).

3. T. Hadeishi, Appl. Phys. Lett., 21, 438 (1972).

4. T. Hadeishi, D. A. Church, R. D. McLaughlin, B. D. Zak, and M. Nakamura, Lawrence Berkeley Laboratory Report LBL-1583 (1973), to be published.

5. A. C. G. Mitchell and M. W. Zemansky, "Resonance Radiation and Excited Atoms," Cambridge University Press, 1961.

6. B. D. Zak, B. Chang, and T. Hadeishi, Bull. Am. Phys. Soc. II, 18 1573 (1973).

Table I. Measurements of Solid Standards Using Two Slightly Different Versions of the Two-Chamber Furnace Operated near 850 °C

Sample	Sample weight range (mg)	NBS Value[a] (ppb)	Number of measurements	Results[b] (ppb)
NBS orchard leaves, SRM 1571	2.9-9.4	155±15	9	154±28
NBS bovine liver SRM 1577	5-10	16±2	9	22.1±6.3
NBS bovine liver SRM 1577	10-12	16±2	6	15.8±5.1
NBS bovine liver SRM 1577	10-20	16±2	8	16.2±3
NBS bovine liver SRM 1577	20-30	16±2	4	13.7±1.4
Seal lion kidney F6	2.2-3.9	1600,[c] 1050[d]	10	1300±100

[a]Uncertainty is two standard deviations.

[b]Uncertainty is one standard deviation.

[c]Single X-ray fluorescence result. (LLL Value)

[d]Single cold-vapor AA result. (LLL Value)

Table II. Additivity of Organic and Inorganic Samples Under a Variety of Conditions

Carrier gas	Sample	Amount	Number of measurements	Result (ng)	Expected result from separate measurements (ng)
O_2	CH_3HgCl in 0.03N HCl	5λ	6	3.35±0.28	—
	$HgCl_2$ in 0.03N HCl (1 ppm)	5λ	6	5.0 ±0.24	5 ng standard
	Mixture of two samples	5λ	6	8.0 ±0.6	8.35±0.37
	Thimerosal[a] in H_2O	5λ	6	4.8 ±0.3	—
	$HgCl_2$ in 0.2N HCl (1 ppm)	5λ	6	5.0 ±0.3	5 ng standard
	Mixture of two samples	5λ	6	9.8 ±0.7	9.8 ±0.43
O_2, CuO in sample holder	CH_3HgCl in 0.3N HCl	5λ	3	4.65±0.25	—
	$HgCl_2$ in 0.3N HCl (1 ppm)	5λ	3	5.0 ±0.38	5 ng standard
	Mixture of two samples (1/2 concentration)	5λ	7	2.9 ±0.5	2.4 ±0.25
O_2	S. F. Bay sediment (20-50 mg) spiked with 5λ of 1 ppm $HgCl_2$ in 0.3N HCl	5λ	5	50±9.3	50±2.2
	S. F. Bay sediment (3-6 mg) spiked with 5λ $HgCl_2$	5λ	9	50±2.8	50±2.2
Argon	$HgCl_2$ in 0.3N HCl (1 ppm)	5λ	5	5.0 ±0.1	5 ng standard
	$HgCl_2$ in 0.3N HCl (1 ppm)	10λ	3	9.6 ±0.14	10.0 ±0.14
	CH_3HgCl in 0.3N HCl	5λ	4	4.65±0.24	—
	CH_3HgCl in 0.3N HCl	10λ	4	8.91±0.27	9.3 ±0.35
	Mixture of two samples (1/2 concentration)	5λ	5	2.46±0.16	2.41±0.14
	CH_3HgCl in 1N H_2SO_4 plus 5λ NaOH	5λ	2	4.70±0.21	4.65±0.24

[a] A trade name for sodium ethylmercurithiosalicylate.

Figure Captions

Figure 1. An example of a two-chamber furnace used in measurements of trace quantities of mercury. The walls of the chamber are made of welded stainless steel. A large ac current is passed through these walls to provide resistive heating in addition to the heating from the heater elements shown. A stop reproducibly positions the sample holder in the furnace. The holder consists of a platinum foil cup supported by four platinum wires welded to a stainless steel tube. The length of the absorption tube is 30 cm, and its diameter is 1.25 cm.

Figure 2. Chart recordings of signals for (a) 5 μl of 1 ppm $HgCl_2$ in 0.3N HCl, (b) 5 μl of about 1 ppm CH_3HgCl in 0.3N HCl, and (c) 5 μl of Thimerosal (sodium ethylmercurithiosalicylate) in water. We find that the integrated signal is a more useful measure than peak signal height. Small differences in signal shape, which do not affect the integrated area, can be seen.

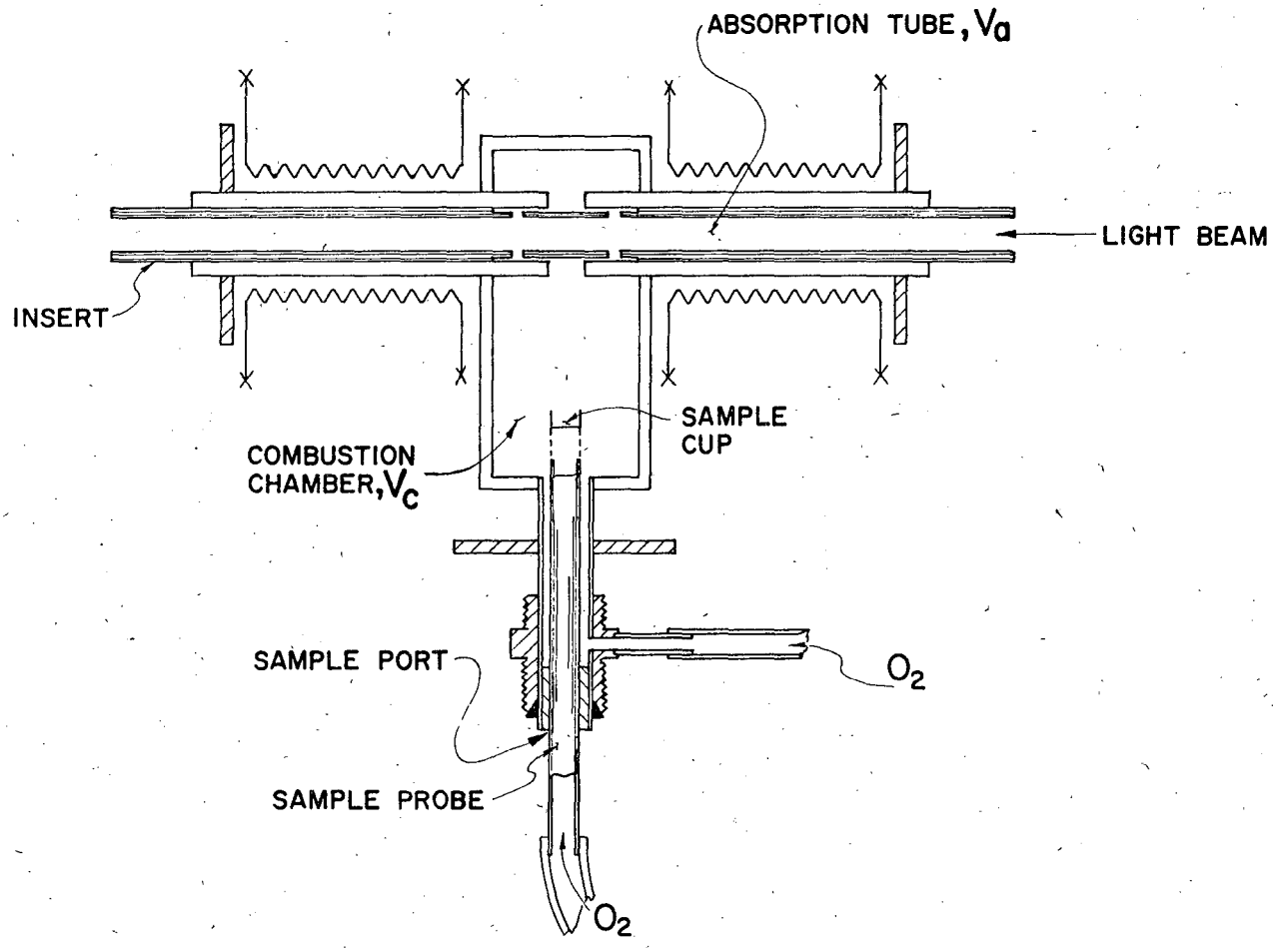

XBL 736-858

Fig. 1

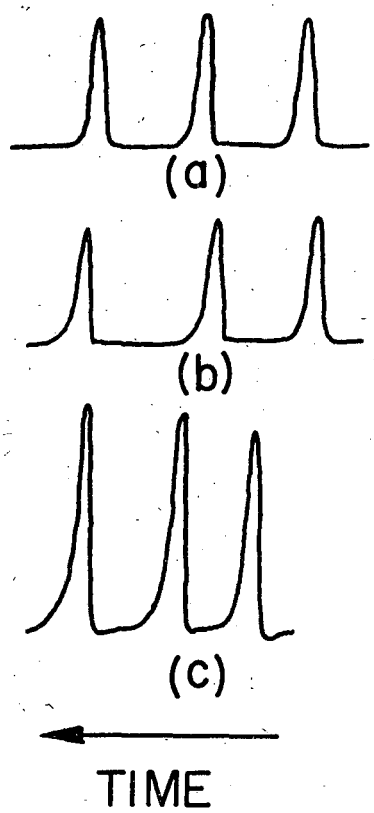

Fig. 2.

LEGAL NOTICE

This report was prepared as an account of work sponsored by the United States Government. Neither the United States nor the United States Atomic Energy Commission, nor any of their employees, nor any of their contractors, subcontractors, or their employees, makes any warranty, express or implied, or assumes any legal liability or responsibility for the accuracy, completeness or usefulness of any information, apparatus, product or process disclosed, or represents that its use would not infringe privately owned rights.

TECHNICAL INFORMATION DIVISION
LAWRENCE BERKELEY LABORATORY
UNIVERSITY OF CALIFORNIA
BERKELEY, CALIFORNIA 94720