Submitted to Analytical Chemistry

LBL-2455
Preprint c.2

INSTRUMENTATION FOR WATER QUALITY MONITORING

Sidney L. Phillips, Dick A. Mack and William D. MacLeod

November 29, 1973

Prepared for the U. S. Atomic Energy Commission
under Contract W-7405-ENG-48

RECEIVED
LAWRENCE
RADIATION LABORATORY

JAN 9 1974

LIBRARY AND
DOCUMENTS SECTION

LAWRENCE BERKELEY LABORATORY
UNIVERSITY OF CALIFORNIA

TWO-WEEK LOAN COPY

This is a Library Circulating Copy which may be borrowed for two weeks. For a personal retention copy, call Tech. Info. Division, Ext. 5545

LBL-2455 c.2

DISCLAIMER

This document was prepared as an account of work sponsored by the United States Government. While this document is believed to contain correct information, neither the United States Government nor any agency thereof, nor the Regents of the University of California, nor any of their employees, makes any warranty, express or implied, or assumes any legal responsibility for the accuracy, completeness, or usefulness of any information, apparatus, product, or process disclosed, or represents that its use would not infringe privately owned rights. Reference herein to any specific commercial product, process, or service by its trade name, trademark, manufacturer, or otherwise, does not necessarily constitute or imply its endorsement, recommendation, or favoring by the United States Government or any agency thereof, or the Regents of the University of California. The views and opinions of authors expressed herein do not necessarily state or reflect those of the United States Government or any agency thereof or the Regents of the University of California.

INSTRUMENTATION FOR WATER QUALITY MONITORING*

Sidney L. Phillips, Dick A. Mack,
William D. MacLeod

Energy & Environment Division
Lawrence Berkeley Laboratory
University of California
Berkeley, CA 94720

ABSTRACT

A survey is made of commercial instruments currently in production which are useful in providing data for water quality monitoring. Instruments are classified as laboratory analyzers, semi-continuous samplers, or continuous samplers; they are applied to measure the quality of fresh, waste and saline waters. The ideal instrument for providing sound water quality data is described.

---

*This work was funded under Grant AG-271 from Research Applied to National Needs, National Science Foundation, and performed in facilities provided by the U.S. Atomic Energy Commission

That water quality control is essential to our health and economic well-being cannot be questioned. Based on monitoring data waste discharge processes are modified, industrial plant designs are altered and legal actions are initiated. A very thin line separates unacceptable pollution from imposition of controls which can stifle the industries upon which so much of our well-being depends. The need to obtain sound water quality data is obvious.

Reliable water quality data are needed to supply information for decision-making in a number of areas: (1) policy planning, which requires broad scale determination of general improvements in ambient water quality to measure the effectiveness of abatement controls on particular pollution sources, and the effectiveness of major abatement activities such as enforcement; (2) program planning which requires information regarding pollution cause and effect relationships in specific basins and regions; (3) general assessment of the availability and utility of water as a national resource for all uses; (4) compliance with existing water quality standards such as those established for drinking water; and (5) enforcement decisions which encompass the information needed under program planning but contain greater detail on the sources of pollution, the organizations responsible for the sources, and the related abatement progress.

Water monitoring in the United States has a long history of careful measurements by a large group of dedicated workers. Most of this work depended upon wet chemical analysis. While wet chemical analysis continues

to be useful in many areas such as research operations and instrument calibration, the combined needs for rapid, frequent and trace analysis demand increasing use of instrumental methods, preferably those which can be automated and are continuous in operation.

The availability of instrumentation for measuring a large number of water quality parameters, as well as the digital computer, has made it possible to examine increasingly complex monitoring problems. The instrumentation is based on components and accessories designed for sensing, measuring, processing and using water monitoring information. Instruments for water quality monitoring can be classified in many ways. It is convenient to separate them as follows: (1) continuous samplers, (2) semi-continuous samplers, (3) laboratory analyzers. Continuous sampler instruments measure a constituent or physical parameter on an uninterrupted basis; these instruments may be used in the field or in the laboratory. Semi-continuous samplers measure a pollutant on an interrupted or discrete sampled basis; the analysis is then performed on this sample. Semi-continuous sampling analyzers are utilized in both field and laboratory applications. Laboratory analyzers ordinarily operate in the laboratory due to the constraints of operator intervention, operational environment, fragility or high maintenance requirements. Table I lists these three classes of instrumental techniques generally used for measuring the constituent or physical parameter indicated in fresh, waste, or saline water.

In this paper it is not possible to cover all monitoring methods; however, instrumental techniques employed for the determination of contam-

Table I: Instrumental Methods for the Examination of Fresh, Waste and Saline Water

Instrumental Method	Parameter Measured
Continuous Samplers	
Gas Sensing Electrode	O_2; NH_3; SO_2
Turbidimetric; Nephelometric	Turbidity
Transmissometric	Turbidity
Wheatstone Bridge	Conductivity; Salinity
pH Meter	H^+ activity
Thermistor; Thermocouple; Resistance Change	Temperature
Reflectance	Oil and Grease
Potentiometric	Oxidation-Reduction Potential; Selective Ions (e.g., F^-)
Semi-Continuous Samplers	
Atomic Absorption	Hg
Molecular Absorption	Metals; Total Alkalinity; Cl^-; F^-; Total Hardness; Nitrogen (NH_3); Nitrogen (total, Kjeldahl); Nitrogen (Nitrate-Nitrite); Nitrogen (Organics +NH_3); Phosphorus (all forms); TOC; Silica (dissolved); $SO_4^=$; $PO_4^=$; Cl_2 (free; combined); $CrO_4^=$; Hydrazine; MnO_4^-; $SO_3^=$; COD; Phenols
Electrochemical (Amperometric)	Cu
Gas Sensing Electrode	TOD (O_2 measured)
Potentiometric	Oxidation-Reduction Potential; Selective Ions (F^-; CN^-; Cl^-)
Laboratory Analytical Systems	
Differential Pulse Voltammetry	Electroactive Constituents
Anodic Stripping	Mercury-Soluble Metals
Atomic Absorption	Metals
Molecular Absorption	Gases; (see Semi-Continuous Samplers)
Emission Spectroscopy	Metals
Neutron Activation	Elemental Analysis
X-Ray Fluorescence	Elemental Analysis
Gas Sensing Electrode	Dissolved Oxygen; Biochemical Oxygen Demand
Ion-Selective Electrode	F^-; CN^-; NO_3^-; Cl^-; others
Gas Chromatography	Oils, Phenols; Pesticides; Sludge Digester Gas
Mass Spectrometer	Metals; Pesticides (in conjunction with a gas chromatograph)

inants included in the EPA list of toxic pollutants (e.g., cadmium, mercury, cyanide, pesticides) and turbidity will be explored in more detail. Discussion of these contaminants will center around those methods which form the basis of present commercial instrumentation along with those ideas which appear to merit further investigation. More complete information on current instrumentation and operating principles for these and other water quality parameters are found in Instrumentation for Environmental Monitoring, WATER (1).

Water Monitoring Systems

Prospective purchasers of water monitoring instruments are faced with a bewildering array of samplers, basic analyzers, detectors, data display options, data processing units and various accessories commercially available from over fifty major manufacturers. Deciding on which instrument and accessories to purchase for specific monitoring objectives presents a real challenge to both the novice and the experienced person.

The purchaser needs to consider that in water monitoring systems the following basic functions must be provided: Sampling, detection or sensing, electronic processing, data display, and calibration. Each function is important, and the entire monitoring system must be considered in order to realize the full operating capabilities of the system. Each of the following descriptions applies principally to the analyzer, where the actual measurement of pollutant concentration or physical parameter is made.

Besides the analyzer, a system will need one or more of the following components: probes to obtain the sample; lines to transport the sample; accessories or apparatus to extract, chemically react, concentrate, buffer, or otherwise pretreat the sample before analysis; selective filters to remove suspended particulates that can affect accuracy or operation; pumps to move the sample, calibration devices, readout means and data-handling peripherals such as strip-chart recorders or analog-to-digital converters. Some or all of these components may be included as a part of the basic analyzer.

Both the discussion which follows and specific examples given will center around the more important water quality parameters which have been selected from the U.S. Public Health Drinking Water Standards, and the EPA list of toxic pollutants. Instrumental techniques covered will be confined to presently employed methods such as those given in Standard Methods, 13th Edition, the EPA Methods manual and the U.S. Geological Survey Collection (2,3,4). Analysis for these pollutants is predominantly carried out in the laboratory.

Laboratory Analyzers

Despite the large advances in instrument automation, the majority of water monitoring information is still obtained using manually operated laboratory analyzers. Manual operation implies human involvement in order to progress from one step in the analysis to another. All water quality

parameters can be monitored using laboratory analyzers. For this purpose, "grab" (discrete) water samples are obtained, with a preservative often added to minimize changes in concentration caused by temperature variations or chemical reactions in the sample. Fig. 1 shows a typical sequence of steps. In the following sections atomic absorption spectrophotometry and gas chromatography are discussed as examples of the state-of-the-art of analytical technology for laboratory analyzers. These are the methods most often used to monitor the toxic pollutants Hg, Cd, and pesticides in water samples.

Atomic Absorption

The metal content of water samples is generally measured using flame atomic absorption spectrophotometry. Basically, monochromatic light from a lamp source with a spectral content characteristic of the metal being analyzed is passed through a flame containing atoms of the metal being sought and then into a measuring system. The attenuation in light intensity due to absorption by the metal atoms, corrected for background effects, is related to metal concentration in the water sample by calibration data. In cases where the metal content is below the instrumental sensitivity, a pre-measurement concentration step is used (e.g., extraction into a solvent of smaller volume than the sample). The solvent layer containing the metal is then aspirated into the flame.

Besides flame methods, atomizing the metal by flameless atomic absorption appears promising for application to water analysis. In the hot

atomization method microliter aliquots of the water sample are pipetted into a carbon, graphite or tantalum ribbon furnace. The sample is sequentially dried, ashed (if necessary) and heated to incandescence to atomize the metal. The increased sensitivity and simplified procedures compared with the flame method makes this attractive for water analysis. However, attenuation of light intensity can be caused by scattering due to smoke or salt particles produced during the heating steps thereby requiring additional means for compensation (e.g., H_2, D_2 lamps). In the cold vapor atomization method elemental mercury is generated chemically in water, and subsequently swept out by an air stream into the optical cell for measurement. This is by far the most widely used method for Hg.

In atomic absorption laboratory instruments the monochromator is placed after the sample absorption chamber, and is usually a grating mounted in either the Czerny-Turner or Ebert configuration; detection is usually with a photomultiplier tube. Notable exceptions are the mercury monitors such as those available from Geomet, Olin and Coleman, where a monochromator is not needed, and the detector is a phototube.

Readout is in either analog or digital form. Analog readout systems may include a peak detecting circuit which holds a meter needle or other recorder at its maximum deflection. Digital data display is available on practically all instruments; a number have optional data printout by means of paper tape for automated data processing and teleprinter. Expected advantages of automated data processing include increased speed of calculation,

greater reliability, as well as freeing the operator from the necessity of repetitive calculations. A teleprinter permits report preparation in almost any desired format, while simultaneously preparing a punched tape. The punched tape is generally prepared in ASCII code (American Standard Code for Information Interchange) suitable for entry into computers.

Other surveys list manufacturers of atomic absorption instrumentation (5). Table II is limited to commercially abailable instruments for flameless atomic absorption in two classes: (a) instrument packages or accessories to atomic absorption instruments which can analyze all metals; and (b) instruments or accessories specifically applied to mercury monitoring.

On a concluding note, water quality laboratories need to evaluate the anodic stripping and differential pulse electrochemical methods. Both techniques are capable of measuring more than one element simultaneously with sensitivities equal to or exceeding atomic absorption methods. And the price is under $3,000 for the basic analyzer.

Gas Chromatography (GC)

In water quality assessments GC is used to monitor oils, pesticides, phenols and sludge digester gas. The great power of this technique is the outstanding ability to separate mixtures into individual components. In principle GC is a method for physically separating a gaseous mixture into

Table II: Typical Commercially Available Flameless Atomic Absorption Accessories and Instruments

A. Accessory to Atomic Absorption Instrument

Manufacturer	Approximate Cost	Comments
Barnes Glomax ETA	$1,895	Tantalum ribbon
Beckman Mercury Analyzer	$700	Hg Gasifier
F & J Scientific	$200	Hg Gasifier
Instrumentation Laboratory Model 355	$2,995	Tantalum ribbon
Instrumentation Laboratory	$172	Hg Gasifier
Jarrell-Ash (Fisher) JA82-732	$1,495	Hg Gasifier (Automated)
Perkin-Elmer	$370	Hg Gasifier
Perkin-Elmer HGA 70 HGA 2000	$3,950	Graphite Furnace
Varian-Techtron Model 63	$2,995	Carbon Rod
Varian-Techtron	$200	Hg Gasifier

B. Mercury Analyzers (no monochromator)

Manufacturer	Approximate Cost	Comments
Coleman MAS 50	$995	Analog readout
Geomet 201, 103	$11,000	Semi-continuous
Olin	$19,250	Semi-continuous
Spectro Products Inc.	$5,050	Semi-continuous

its components by passing the mixture through a column containing a stationary phase with a high-surface-to-volume ratio. The stationary phase is usually a solid support material coated with a thin liquid film. An inert carrier gas passes through the column under carefully controlled conditions transporting with it the components of the sample. The components are delayed in the column according to their relative retentivity in the liquid phase. The compounds emerge from the column at times related to their degree of retention by the liquid phase. For oils, phenols and sludge digester gas there is a choice in the material used to fabricate the column; however, a glass column (e.g., silanized pyrex) is preferred for pesticides. Some tubing materials catalyze sample decomposition within the column; this is especially true in the case of Cu tubing used for chlorinated pesticides. Another difference in pesticide monitoring is the use of two or more columns with different stationary phases for additional confirmatory pesticide identification.

The electron capture detector is generally used for chlorinated pesticides (e.g., Aldrin, dieldrin, endrin, toxaphene, DDD, DDE, DDT) and PCB's. In this detector beta particles from a source ionize the carrier gas molecules and form "slow" electrons. These slow electrons migrate to an anode to produce a steady current. Introduction of an electron-capturing constituent such as chloride into the carrier gas causes a decrease in the current which is related to the logarithm of the concentration of the capturer. Basides chloride, other groups which capture electrons include anhydrides, peroxides, nitrates, ozones, 1,2-diketones, oxygen and organometallic compounds. Thus, electron capture is not specific for chlorinated pesticides; these other groups must be absent to obtain high specificity.

The microcoulometric halogen detector is more specific than electron capture for chlorinated pesticides and polychlorinated biphenyls, but not quite as sensitive. The Coulson conductivity detector also can be made specific for halogens by selective removal of all other volatile ionic combustion products in the GC effluent.

Mass spectrometers (MS) have recently been combined with GC and applied to pesticide detection. In the combined GC/MS instrument, a glass separator generally serves as the interface for the carrier gas between the GC and the MS. The glass separator is maintained under vacuum, and serves to drop the pressure from approximately 1000 torr to about one torr. In the process the pesticide concentration is enhanced because the carrier gas is pumped off faster than the heavier pesticides. Pesticides separated by the GC column then pass into the ionization chamber of the MS where fragmentation occurs into ions typical of the pesticide. The ion fragments are than accelerated into the analyzer section and resolved according to their mass/charge ratio to provide a mass spectrum characteristic of the pesticide. In the Finnigan, Extranuclear and Hewlett-Packard GC/MS instruments, the mass analyzer is an electric quadrupole; the DuPont and Varian instruments have an electrostatic/magnetic analyzer; while CVC employs a time-of-flight analyzer. Table III lists commercially available gas chromatographs useful for pesticide monitoring.

Table III: Typical Commercially Available Gas Chromatographs for Pesticide Analysis

Manufacturer	Model (option)	Approximate Cost
Beckman	GC 65(577653)	$6,760
CVC Products	2655(R)-3(06-008)A	3,550
CVC Products GC/MS	Direct-Coupled	33,000
GC/MS/Data System	SI-150	43,000
Dohrmann	2465-E	3,925
DuPont GC/MS	21-490-B-4	34,400
GC/MS/Data System	21-094	47,000
Extranuclear GC/MS	SpectrEL	27,500 (MS only)
GC/MS/Data System	SI-150	43,000
Finnigan GC/MS	3000 D-003	29,000
GC/MS/Data System	6000	48,795
Fisher	2400-001	4,175
Hewlett-Packard	5713A (055-011-017)	3,975
Hewlett-Packard GC/MS	5700A/5930A	29,600
GC/MS/Data System	5932A	47,000
Nuclide GC/MS	3-60-SECTORR	30,000
Packard	417(8044)	3,825
Perkin Elmer	3990(045-0006)	3,550
Tracor	550(4201-1400-3201)	3,540
Varian	147520-00	3,725
Varian GC/MS	MAT III	25,400
GC/MS/Data System	SS-111MS	

Semi-Continuous Analyzers

In semi-continuous analyzers, a known fraction (sample) of the water is selected, the constituent being sought is chemically reacted one or more times to convert into a form suitable for measurement; the process is repeated on a regular basis. Hopefully the analyzing period is sufficiently short so that no significant chemical changes take place before another sample is measured. Table IV is a listing of manufacturers of semi-continuous analyzers and the water constituent measured. As can be seen, semi-continuous monitors are commercially available for a number of water constituents including the toxic pollutants Hg, mercury, and cyanide.

Analysis of water samples for mercury is generally done using cold vapor atomic absorption in which all forms of dissolved mercury are first oxidized by chemical reaction to Hg(II), then chemically reduced from the divalent state to elemental Hg. The elemental Hg is subsequently swept out of the reaction cell by an air stream into an absorption cell containing a mercury light source for measurement: The light intensity of the 253.7 nm line decreases due to absorption by the Hg vapor which in turn is a function of the Hg content in the water sample. In the Olin analyzer, ammonium persulfate and cuprous chloride are used in the oxidation step, and hydrazine as the reductant; other analyzers use potassium permanganate to oxidize Hg and stannous ion to reduce Hg. In the Geomet analyzer, the gas stream containing mercury is passed into a chamber where the Hg vapor

Table IV: Typical Commercially Available Semi-Continuous Sampling Analyzers

Parameter	Manufacturer
Phenols	DuPont Model 450
TOD, Suspended Solids, NO_3^-, Cu CN^-, $S^=$, Cr, $PO_4^{\equiv}$, NH_3, Fe	Enviro Control, Inc., 2000 Series Multi-parameter
Cu	Fischer & Porter, 17H1040 Series
Hg	Geomet
Hg	Olin
BOD	Hach Chemical Co., Model 2173
$PO_4^{\equiv}$, TOD, TOC	Ionics, Inc., Model 1224, 225
Cr, Fe, Cu, Hardness, Alkalinity $PO_4^{\equiv}$	Raytheon Co., Series 1500
Acidity, Alkalinity, NH_3, Br, Cl, F, Residual Cl_2, Ca Hardness, $CrO_4^=$, Cu, CN^-, dissolved Solids, Fe, Ni, NO_3^-, ORP, $PO_4^{\equiv}$, Si, Ag, Temperature	Delta Scientific Series 8000, Multi-parameter
CN^-, F^-	Orion Research
NH_3, NO_3^-, NO_2^-, $PO_4^{\equiv}$, Total P Si, Fe, $CrO_4^=$, Cu, COD, CN^-, Phenols, F^-	Technicon Instruments Corp. CSM6 Multi-parameter
TOC, BOD	Oceanography International Corp.
TOC	Infrared Industries
Dissolved Ozone	Ozone Research & Equipment Corp.
Phenols	Spectro Products, Inc.
Oils (total)	Teledyne Analytical Instruments
TOC	Envirotech Corp.

collects on gold grids. The mercury is subsequently vaporized by electrically heating the gold. For both analyzers the vapor appears as a burst in the absorption cell giving a large signal even at the very low concentration levels normally found in fresh waters (< 0.5 μg/l).

Development of semi-continuous analyzers to meet monitoring requirements is an active field. For example, a recently introduced method for monitoring cyanide utilizer ion-selective electrodes with the Orion Model 1206 cyanide monitor. Basically, the system contains a chemical reaction section and an electrode sensing chamber. See Figure 2. The sample (or standard) is introduced at G, then mixed with a reagent composed of acidified EDTA (pH 4) at A. The sample and EDTA solution are heated at C to cause ligand exchange to free complexed cyanide and form metal-EDTA complexes. However, iron, cobalt, and platinum cyanide complexes do not react and any cyanide bound to these metals is not measured. After ligand exchange, the sample stream is mixed with a reagent composed of NaOH (pH 11) and $Ag(CN)_2^-$. The silver cyanide complex is dissociated according to the equilibrium: $Ag(CN)_2^- \rightleftarrows Ag^+ + 2CN^-$. Thus, any cyanide from the sample will increase the amount already present in the reagent and shift the equilibrium to the left. The silver-sulfide electrode records a potential with respect to sodium ion reference electrode, and the potential change is related to cyanide concentration in the sample by calibration.

Continuous Monitors

Continuous monitors employ sensors to detect a change in water quality parameters. By sensor we mean probes that respond to states of physical quantities as inputs and deliver information of these states as their outputs without any intervening chemical steps.

Continuous monitors generally sample a water stream in one of three ways: (1) by pumping the water into a flow-through chamber containing the sensor package; (2) by submersing the sensor package into the water; or (3) by monitoring a slip-stream. Multiparameter capability may be provided by combining individual sensors. Besides physical parameters (e.g., temperature, conductivity, oxidation-reduction potential, turbidity) continuous monitors commonly record pH and dissolved oxygen, and more recently fluoride and chloride. Table V lists commercially available continuous monitors with single or multiparameter capability.

Sensors are interfaced to the signal processor by electronic processing circuits. The signal processing circuits will provide one or more of the following functions: (1) amplify the sensor signal, (2) linearize the sensor output, (3) automatically compensate for changes in water temperature, (4) inject test signals for aid in calibration and maintenance. In the more modern systems modular electronics is used extensively.

Table V: Typical Commercially Available Continuous Monitors

Sensors	Manufacturer
pH, Turbidity, DO, ORP, Cl^-, Temperature, Specific Ions, Conductivity	Aquatronics, Inc., Midas
Temperature, Conductivity	Beckman Instruments, Inc., Cedar Grove Operations
DO, pH, Turbidity, Conductivity	Climet Instruments Co.
pH, ORP	Condra-Tech, Inc.
Conductivity, DO, ORP, pH, Turbidity	Delta Scientific Series 8000
Br^-, Ca, Cl^-, F^-, DO, Hardness, Nitrate, ORP, pH, Turbidity, Temperature, Conductivity	Ecologic Instrument Co., Series 400
Turbidity, ORP, DO, pH, Temperature, Cl^-, F^-, Conductivity	Enviro Control, Inc.
pH, F^-	Foxboro
Turbidity	Hach Chemical Co.
pH, ORP, DO, Conductivity	Honeywell Water Analyzer-Transmitter
DO	International Biophysics Corp.
DO, pH, Temperature Conductivity, Turbidity	InterOcean Systems, Inc.
DO, pH, Temperature, Cl^-, ORP, Turbidity Conductivity	Ionics Inc., Series 1600
pH, ORP	Kernco Instruments Co.
pH, ORP, DO, Conductivity, Na	Leeds & Northrup Series 7070
pH, DO, Conductivity, Temperature	Martek Instruments
Turbidity	Monitor Technology, Inc.
DO, Temperature, Turbidity, pH, ORP	Schlumberger EMR
pH (wastewater)	Tri-Aid Sciences, Inc.
pH	Universal Interloc, Inc.
pH, DO, Temperature, Conductivity	Westinghouse Electric Corp.
DO	Weston & Stack

Of the physical parameters only turbidity is included in drinking water standards. It is measured by recording changes in the transmission or scattering of light by the water stream. Light scattering is measured in the forward direction at an angle about 15° from that of the incident light, or at a side angle of about 90°. See Figure 3. An advantage of measurement in the forward direction is a higher scattering intensity than side-scattering; disadvantages include greater susceptibility to stray light and higher cost. Side-scattering instruments have a less critical angle of measurement and may have a higher sensitivity in measuring low turbidity because of the dark background representing zero concentration as compared to full illumination at zero concentration in the forward-scattering method.

Monitor Technology markets forward-scattering instruments suitable for continuous sampling. Light from the source is detected both at 0° and 15°, giving measurements of the unscattered and forward-scattered light intensities. The ratio of the two measurements is recorded, thus providing a correction for any non-scattering attenuation in light intensity due to absorption. Hach Chemical markets a side-scattering continuous monitor in which a light beam is directed at an acute angle to the surface of the water sample which overflows a pipe. Reflected and refracted light is dissipated by baffles, while a portion of the scattered light is measured by a photocell directly above the surface of the overflow from the pipe. Manufacturers of light transmission methods for measuring turbidity include Beckman (Enviro-line), InterOcean, and Hydro Products. Light from a lamp source is projected

through the water being measured onto a detector, and any change in percent transmission is recorded. The attenuation of a light beam is due to absorption or scattering, and is measured over a definite absorption path length (e.g., 10 cm). A disadvantage of this method is that any water coloring will also be recorded as turbidity.

Instrumentation Electronics

Only a quick review of the state-of-the-art of electronics devices used in water monitoring instrumentation is needed to indicate the improvement in component reliability, the uniformity of performance and the reduction in size that has taken place in the past two decades. In the transition from electron tubes to discrete solid-state devices and thence to integrated circuits, the rate of component failure has diminished by two or three orders of magnitude, and the volume of space required to house the circuitry has decreased by an even greater factor. Manufacturers of the best water monitoring equipment are availing themselves of the significant array of solid-state components developed by the computer industry.

Electrical signals from a transducer may be processed either in analog or digital form. By transducer we mean devices that transform one physical phenomenon into another; for example to convert light intensity to related electrical signals. When signals from an input transducer are processed as

a continuous function of the parameter being observed, this is termed analog information. Signals converted to a series of discrete values constitute digital data. Digital data may be expressed in many forms (e.g., decimal numbers use ten discrete levels). However, electronic circuits are more easily constructed and provide a more accurate response if they respond to only two values: off and on, or zero and one. This is binary representation. A whole technology has grown up in the past 30 years wherein any value of a variable may be represented by an array of binary digits, or a modification of this known as binary coded decimal digits.

With analog signals, designers incorporate both bipolar and field effect transistors, the latter being employed in high input impedance, low-noise applications. Operational amplifiers are versatile integrated circuits whose functions and operating characteristics can be dictated to a large degree by a few externally connected components.

The output reading of toxic pollutant analyzers may also be displayed in analog or digital format. Each format has its advantages. If one is only concerned, for example, that the concentration of mercury in the effluent of a chloralkali or pulp plant is normal or abnormally high, a binary indication is sufficient -- a light or bell. If it is necessary to read the concentration to within a few percent, an analog (meter or chart) reading may be used. When accuracies greater than 1% are desired, digital recording

again becomes desirable. Digital information is also more practical to process, transmit, store and record than analog information.

In tracing the evolution of pollutant analyzers one becomes aware that we have only recently begun to take advantage of numerous developments in information processing and data display. The great majority of early instruments employed wet-chemical analysis. In colorimetric determinations, for example, reference was made to a chart or standard solution. As spectrometers and photomultipliers were developed, electrical readout became possible. Figure 4 illustrates a typical water monitor with analog readout. Less than 20% of the presently used analyzers have advanced beyond the most sophisticated chart recorder mentioned above. The majority have not advanced this far.

The tedium of making hundreds of meter readings or interpreting kilometers of chart recordings argues for electronic aids; routine observations should be recorded automatically, thus freeing the trained observer to study the measurements and to act upon the resultant information.

Figure 5 illustrates a number of methods of digital readout. Progressing from the simplest to the most complex data analysis and readout, one may employ (a) light emitting diodes, liquid crystals, or other digital indicators, (b) electric typewriter, (c) punched tape or cards, (d) magnetic tape, or (e) floppy magnetic discs and cassettes. In the last three cases

data can be recorded at the analyzer and the results later processed or transcribed at a central facility at an appropriate time.

Data handling encompasses acquisition, processing, storage and presentation of instrumentally obtained measurements; it may be either manual or automatic. With few exceptions, current data monitoring facilities are simply an agglomeration of interconnected units. For example, an atomic absorption instrument is primarily a signal sampling procedure, signal transducer, amplifier and readout display. Accessories for this basic instrument are available to perform further data handling such as integration, analog to digital conversion, normalization, conversion to concentration units and printout in a computer compatible format. Only a few attempts at a systems approach to water monitoring instrumentation are currently apparent.

By systems approach we mean a plan whereby the signal-sampling procedure, the initial transducer, the data-acquisition facilities, the data processor on through to the ultimate data display is considered as a single total problem. A systems approach would involve standardized instrumentation, thereby permitting orderly advances in the state of the art, instead of the current "bandwagon" approach. Advantages of instrumentation standards include: (a) availability and economy that can result from mass production of hardware of known capability, (b) uniformity of specification of electrical signal levels, signal impedances and supply voltages, (c) individual units for a water monitoring system such as analog-to-digital converters or

digital printout can be completely designed, constructed and tested before the construction of the remainder of the particular operating system is even begun. Significant advances need to be made in this direction.

Looking into the near future, semiconductor memories may be the catalyst for this systems approach to water monitoring instrumentation. The technology first proved its worth in remote terminals, spread to all kinds of computer peripheral equipment and controllers, and made possible the $50 portable calculator. Semiconductor memories are currently used in some instruments; for example, the Autolab System IV computing integrator. See Figure 6.

Conclusion

After reviewing current instrumentation in light of the needs of water monitoring, some general observations are appropriate. Present-day instruments, although adequate in many respects, still have a number of shortcomings. The "ideal" instrumentation system for the next generation of water monitors should include:

1. A detector or transducer which is specific for the parameter of interest. That is, the detector should not be subject to interferences.

2. A monitoring system with multi-parameter capability which can be assembled from individual specific detectors. Conversely, instruments that can measure a number of parameters, e.g., gas chromatograph, are meeting with increasing popularity.

3. Transducers operating on physical principles which are preferred to those requiring wet-chemical methods.

4. Methods by which samples are analyzed or preserved quickly to insure the reliability of the information; *in situ* monitoring is preferred. A number of water reactions are time dependent; for example, pH may change significantly in a matter of minutes, dissolved gases may be lost or gained.

5. Sensitivity capable of detecting ambient levels of a contaminant; this is of particular importance. As the emission levels of pollution decrease, it is necessary that the instrumentation be able to cope with these lower levels. Any steps that eliminate pre-measurement concentration are welcome.

6. The capability of being read out both directly (e.g., for field use) and into remote data-handling facilities for stationary or laboratory application.

7. Sampling and analysis techniques capable of handling suspended and sediment forms of constituents, as well as distinguishing individual forms of a constituent.

8. Methods for accurate calibration either in the laboratory or in the field. Where possible, built-in calibration means utilizing standard solutions are particularly desirable. Erroneous data are worse than no data at all.

9. Instruments should be rugged and thoroughly reliable.

10. And finally, a price that is economically defensible.

Acknowledgment

Thanks are given to Robert J. Budnitz and George Morton, Lawrence Berkeley Laboratory, for their comments.

References

(1) Instrumentation for Environmental Monitoring: WATER, LBL-1, Vol. 2, Technical Information Division, Lawrence Berkeley Laboratory, Berkeley, CA, 94720.

(2) Standard Methods for the Examination of Water and Wastewater, 13th edition, American Public Health Association, 1015 Eighteenth St., NW, Washington, D.C., 20036 (1971).

(3) Methods for Chemical Analysis of Water and Wastes, U.S. Environmental Protection Agency, Analytical Quality Control Laboratory, National Environmental Research Center, Cincinnati, OH, 45268 (1971).

(4) E. Brown, M.W. Skougstad, M.J. Fishman, Methods for Collection and Analysis of Water Samples for Dissolved Minerals and Gases, Book 5, Chapter A1, U.S. Geological Survey (1970). Available from: Superintendent of Documents, U.S. Government Printing Office, Washington, D.C., 20402.

(5) Analytical Chemistry, 1973-74 Lab Guide, August 1973.

Figure 1: Example of a laboratory instrumental system for water quality monitoring.

Figure 2: Schematic of Orion Model 1206 cyanide monitor.

Figure 3: Methods for continuous monitoring of turbidity. (a) % transmission; (b) forward scattering; (c) side scattering.

Figure 4: Water monitoring with analog readout.

Figure 5: Water monitoring with digital data display and digital data handling.

Figure 6: Block diagram of Autolab System IV computing integrator.

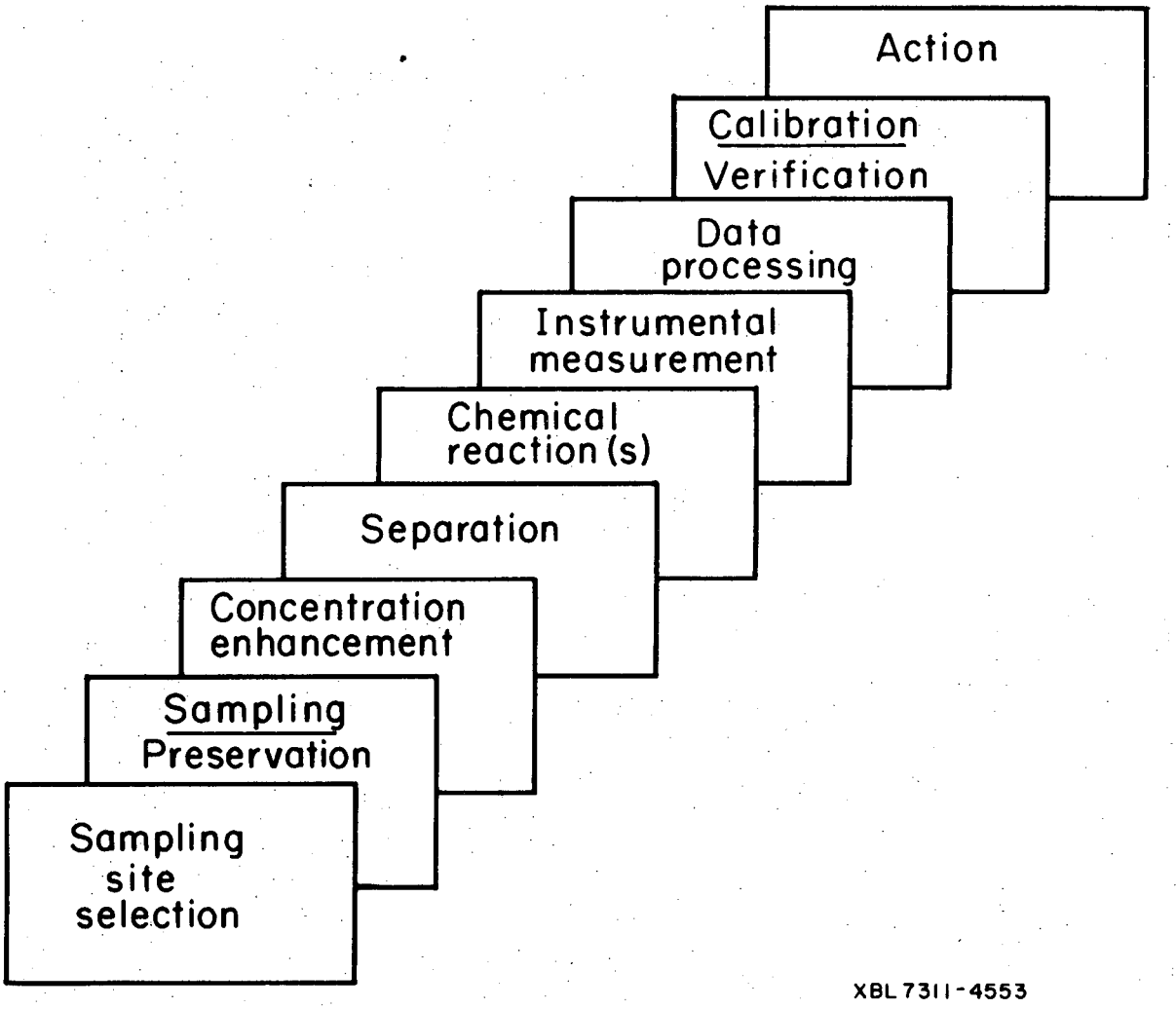
Action
Calibration
Verification
Data processing
Instrumental measurement
Chemical reaction (s)
Separation
Concentration enhancement
Sampling
Preservation
Sampling site selection
XBL 7311-4553

Fig. 1.

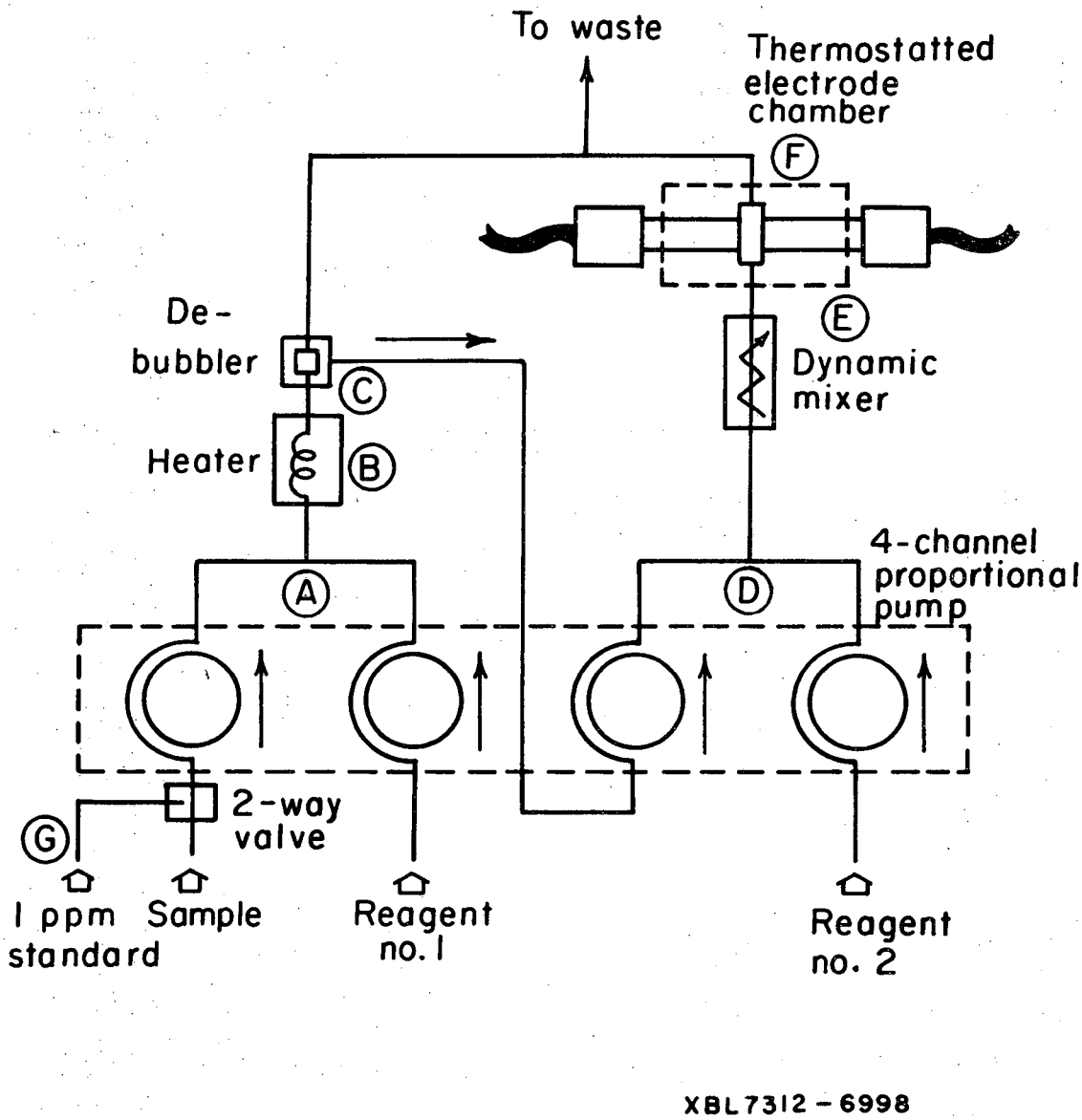
To waste
Thermostatted electrode chamber
F
E
De-bubbler
C
Heater
B
Dynamic mixer
4-channel proportional pump
A
D
2-way valve
G
1 ppm standard
Sample
Reagent no. 1
Reagent no. 2
XBL7312-6998

Fig. 2.

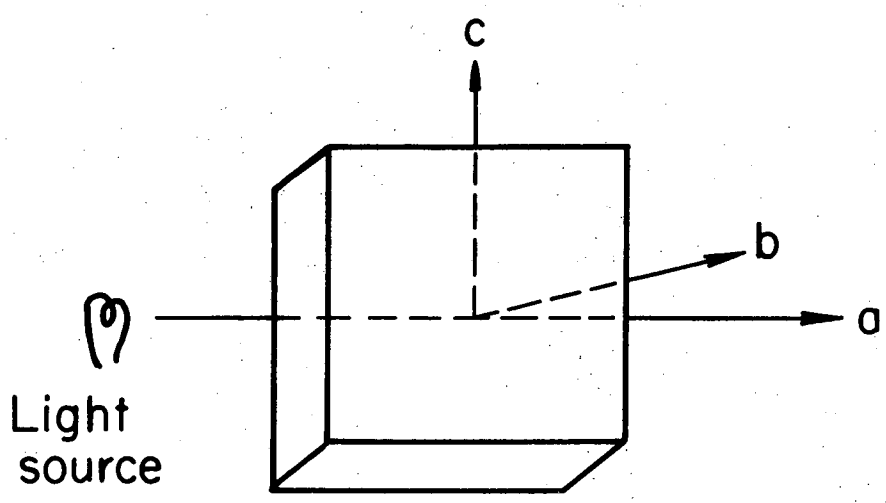

XBL7311-4550

Fig. 3.

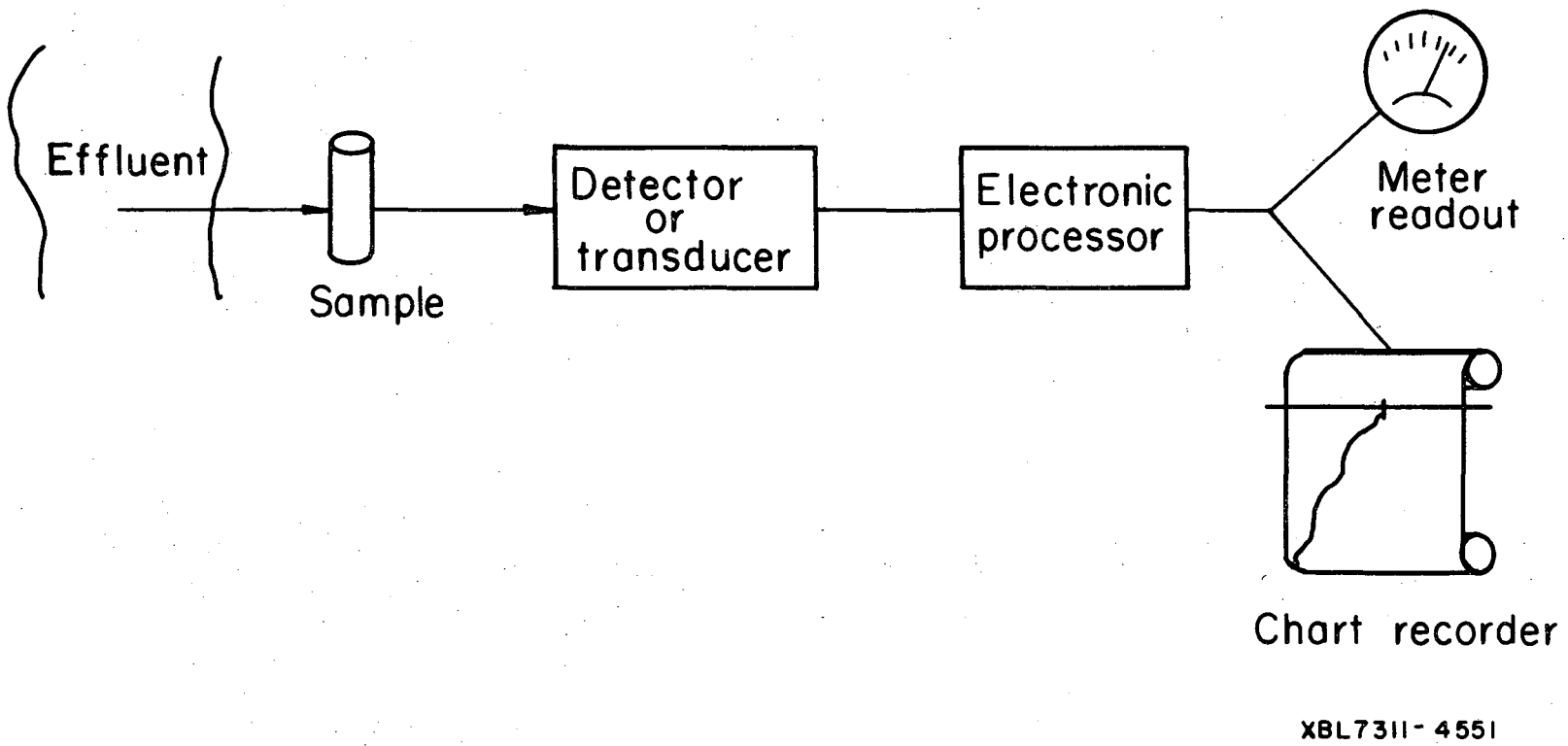
Effluent
Sample
Detector
or
transducer
Electronic
processor
Meter
readout
Chart recorder
XBL7311-4551

Fig. 4.

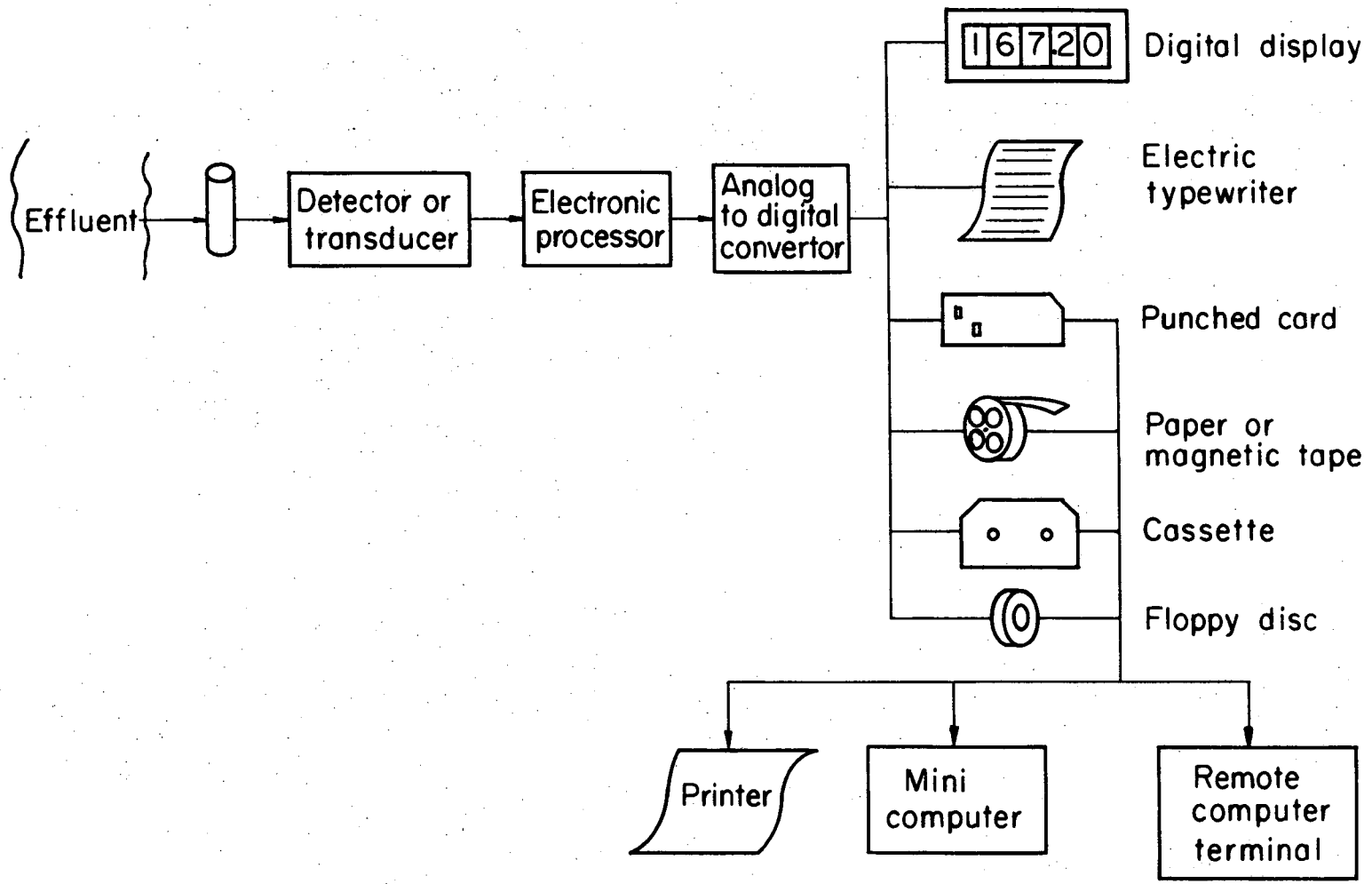

Fig. 5.

XBL7311-4552

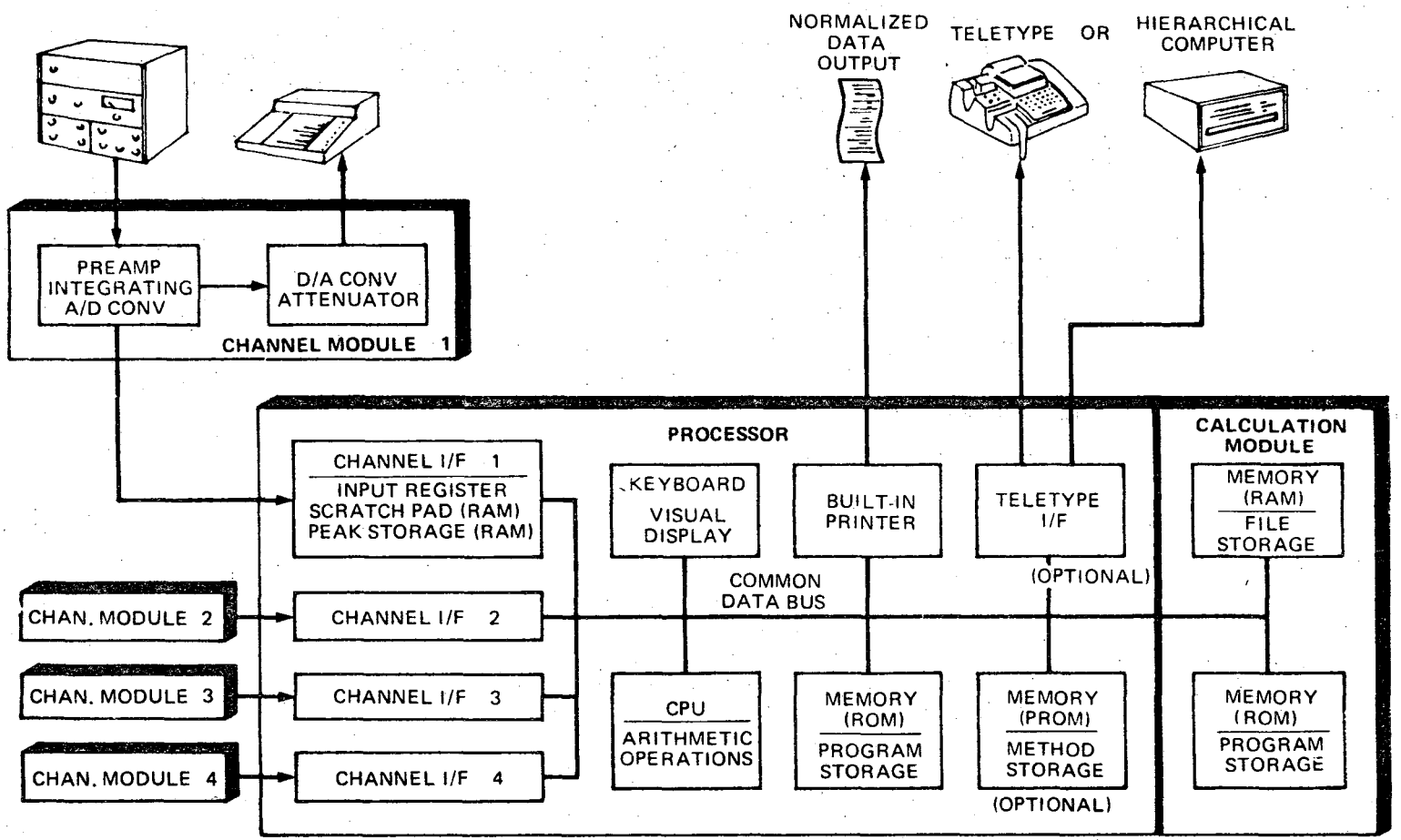

XBL 7312-6884

Fig. 6.

LEGAL NOTICE

This report was prepared as an account of work sponsored by the United States Government. Neither the United States nor the United States Atomic Energy Commission, nor any of their employees, nor any of their contractors, subcontractors, or their employees, makes any warranty, express or implied, or assumes any legal liability or responsibility for the accuracy, completeness or usefulness of any information, apparatus, product or process disclosed, or represents that its use would not infringe privately owned rights.

TECHNICAL INFORMATION DIVISION
LAWRENCE BERKELEY LABORATORY
UNIVERSITY OF CALIFORNIA
BERKELEY, CALIFORNIA 94720