LBL-24870
UC-350

Lawrence Berkeley Laboratory

UNIVERSITY OF CALIFORNIA

APPLIED SCIENCE DIVISION

The Phase III – Efficient Lighting for U.S. NAVAL SHIPS
Interim Report

R.R. Verderber

January 1988

APPLIED SCIENCE
DIVISION

LOAN COPY
Circulates
for 4 weeks
Bldg. 50 Library.
LBL-24870
Copy 2

Prepared for the U.S. Department of Energy under Contract Number DE-AC03-76SF00098

DISCLAIMER

This document was prepared as an account of work sponsored by the United States Government. While this document is believed to contain correct information, neither the United States Government nor any agency thereof, nor the Regents of the University of California, nor any of their employees, makes any warranty, express or implied, or assumes any legal responsibility for the accuracy, completeness, or usefulness of any information, apparatus, product, or process disclosed, or represents that its use would not infringe privately owned rights. Reference herein to any specific commercial product, process, or service by its trade name, trademark, manufacturer, or otherwise, does not necessarily constitute or imply its endorsement, recommendation, or favoring by the United States Government or any agency thereof, or the Regents of the University of California. The views and opinions of authors expressed herein do not necessarily state or reflect those of the United States Government or any agency thereof or the Regents of the University of California.

L-128
LBL-24870

The Phase III - Efficient Lighting for U.S. NAVAL SHIPS

Interim Report

Principal Investigator
R.R. Verderber

Engineer
O. Morse

Applied Science Division
Lawrence Berkeley Laboratory
1 Cyclotron Road
Berkeley, CA 94720

January 21, 1988

Program Manager
Joseph Sherman
David Taylor Research Center

This report has been reproduced directly from the best available copy.

This work was supported by the David Taylor Research Center under Contract No. 0167784RC00009 and partially by the Assistant Secretary for Conservation and Renewable Energy, Office of Buildings and Community Systems, Building Equipment Division of the U.S. Department of Energy under Contract No. DE-AC03-76SF00098.

The Phase III - Efficient Lighting for U.S. NAVAL SHIPS

Interim Report

1.0 Introduction

The first two phases of this program developed a lighting system that improved the system efficacy from 46 lm/w to 58 lm/w. In addition, the a power factor of 90% was attained which reduced the supply current by 46% as well as reducing the harmonic content below 3%. This system is being demonstrated on board a ship for final acceptance, and is expected to be employed on newly constructed ships.

Phase III of this program explores the development of a still more efficient lighting system, in which an efficacy of 80 lm/w is the target. The system is a centralized system in which the 115 volt a.c. is distributed to one or more site on board ship and converted to a d.c. voltage. The d.c. is distributed on to a large group of lamps. At each lamp there will be an oscillator that converts the d.c. to a high frequency a.c. voltage that drives the lamp.

This report is an analysis of the rectifying circuit, its efficiency and an estimated cost.

1.1 Definitions

V	-	Line Voltage - r.m.s. - phase-to-neutral
v_a	-	Line Voltage, instantaneous, phase "a" to neutral
i_a	-	Line Current, instantaneous, phase "a"
v_+	-	Rectifier Output Voltage, positive side, instantaneous w.r.t. neutral
v_-	-	Rectifier Output Voltage, negative side, instantaneous w.r.t. neutral
v_0	-	Rectifier Output Voltage, v_+ - v-
R	-	Load Resistance, ohms
I_a	-	Line Current, r.m.s. value, phase "a"
I_{ap}	-	Line Current, peak value, phase "a"
V_{ap}	-	Line Voltage, peak value, phase "a" to neutral
V_{op}	-	Line Voltage, peak value, phase-to-phase, also equal to Peak Rectifier Output Voltage
P_a	-	Input Power, average value, phase "a" w.r.t. neutral
p.f.	-	Power Factor
V_0	-	Rectifier Output Voltage, rms value
P_0	-	Rectifier Output Power, average value
$V_{0,d.c.}$	-	Rectifier Output Voltage, d.c. compon

V_{ov}	-	Rectifier Output Voltage, ripple component
a_n	-	Amplitude, of Cosine Harmonic
b_n	-	Amplitude, of Sine Harmonic
ω	-	Line frequency, radians per second
t	-	Time, seconds

2.0 Bridge Rectifier

2.1 Three - Phase Full Wave

Figure 2.1 is a schematic of the three-phase full wave bridge rectifier. The phase voltages and currents are labelled, and R represents the lighting load.

$$v_a = \sqrt{2}\, V \sin \omega t$$

$$v_b = \sqrt{2}\, V \sin \omega t$$

$$v_c = \sqrt{2}\, V \sin \omega t$$

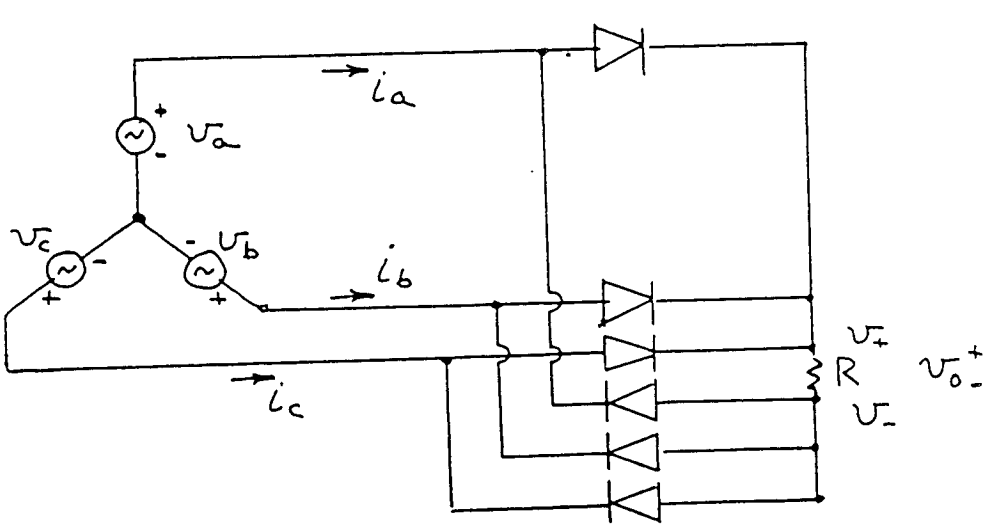

Figure 2.1 Circuit Schematic of 3-Phase Full Wave Rectifier

The voltage and current wave forms are drawn in Figure 2.2 (a, and b), respectively.

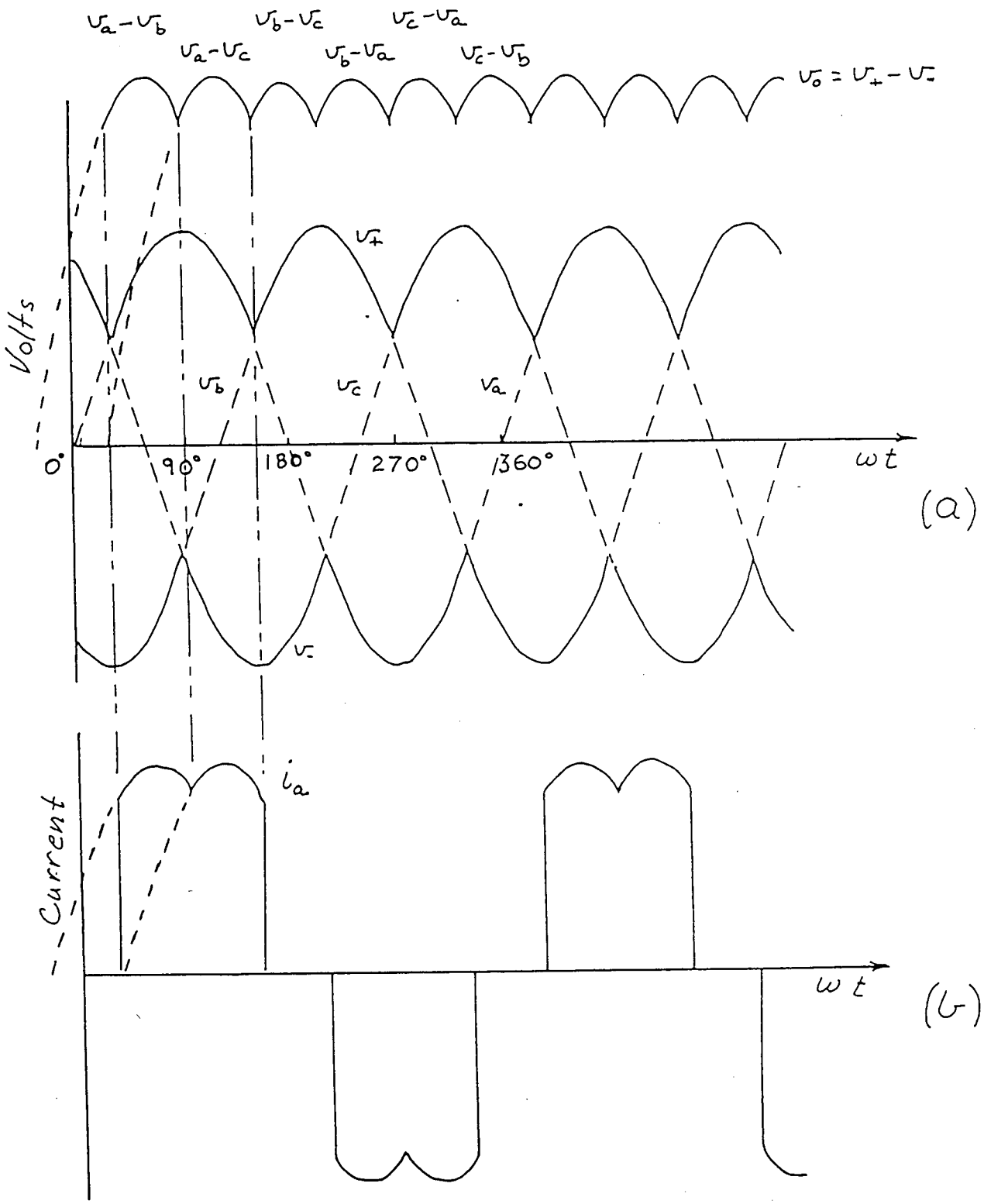

Figure 2.2 Three-Phase Full-Wave Rectifier Waveforms, (a) Voltage, (b) Current

2.11 Line Current (I_a, rms)

To determine the root-mean-square (rms) current, the peak current I_{ap} must be calculated. I_{ap} is equal to the peak output voltage (V_{op}) divided by the load resistance. V_{op} is the peak phase to phase voltage, or $\sqrt{3}\ V_{ap}$. $V_{ap} = \sqrt{2}$ V, then $V_{op} = \sqrt{6}$ V. Then

$$I_{ap} = \frac{V_{op}}{R} = \frac{\sqrt{6}\ V}{R}$$

$$I_a \text{ rms} = \sqrt{\bar{i}_a^2}\ , \text{ where } i_a^2 = \frac{1}{2\pi}\int_0^{2\pi} i_a^2\ (\omega t)\ d\omega t\,.$$

From wave form symmetry, we can integrate between 0 and $\pi/2$. We let $x = \omega t$, then

$$i_a = 0,\ 0 \le x \le 30°$$

$$i_a = I_{ap} \sin(x + 30°),\ 30° \le x \le 90°, \text{ then}$$
$$i_a^2 = 0.609\ I^2_{ap}$$

$$I_a = 0.708\ I_{ap} = 1.911\ V/R$$

2.12 Total Input Power

The input power to one phase P_a is the integral of $v_a\ i_a$ over the interval.

$$P_a = \frac{1}{2\pi}\int_0^{2\pi} v_a\, i_a\ d\omega t$$

$$P_a = 1.829\ \frac{V^2}{R}$$

The total power is the sum of each phase or :

$$3P_a = 5.487\ \frac{V^2}{R}$$

2.13 Power Factor

The power factor is the power divided by the product of the rms current and rms voltage.

$$PF = \frac{P_a}{V I_a} = \frac{1.829 \frac{V^2}{R}}{V \times 1.911 \frac{V}{R}} = 0.957$$

2.14 Output Voltage (V_0 rms), Current (I_0 rms) and Power (P_0)

The r.m.s. output voltage is equal to $\sqrt{\overline{v_o^2}}$. Based upon the symmetry, the function can be integrated from 0 to $\pi/6$, where

$$\overline{v_o^2} = \frac{1}{\frac{\pi}{6}} \int_0^{\frac{\pi}{6}} V_{op}^2 \cos^2 \omega t \, d\omega t .$$

$$\overline{v_o^2} = 0.913 \; V_{op}^2 ;$$

$V_{op} = \sqrt{3} \; V_{ap} = \sqrt{6} \; V$, then

V_0 (rms) $= 2.342$ V,

I_0 (rms) $= V_0/R = 2.342$ V/R,

$P_0 = V_0^2/R = 5.485 \; V^2/R$,

which checks with the sum of the phases $P_a + P_b + P_c$, equation 8, for the total input power.

2.15 D.C. Output Voltage (V_0, d.c.)

The d.c. output voltage is,

$$V_{0d.c.} = v_0 = \frac{1}{\frac{\pi}{6}} \int_0^{\frac{\pi}{6}} V_{op} \cos x \, dx$$

$$= 3/\pi \; V_{op} = 2.339 \text{ V} \quad .$$

2.16 Ripple, Percent Ripple

The ripple voltage is:

$$V_{0r} = \sqrt{V_0^{\,2} - V_0^{\,2} \text{ d.c.}}$$

$$= 0.0981 \text{ V}$$

$$\% \text{ Ripple} = V_{0,}r/V_{0,} \text{ d.c.} = 0.981/2.339 = 4.2\%.$$

2.17 Line Current Harmonics

The amplitude of the current is:

i_a	=	0,	$0 \le x \le \pi/6$
	=	$I_{ap} \sin(\omega t + \pi/6)$	$\pi/6 \le \omega t \le \pi/2$
	=	$I_{ap} \sin(\omega t - \pi/6)$	$\pi/2 \le \omega t \le 5\pi/6$
	=	0	$5\pi/6 \le \omega t \le 7\pi/6$
	=	$I_{ap} \sin(\omega t - \pi/6)$	$7\pi/6 \le \omega t \le 3\pi/2$
	=	$I_{ap} \sin(\omega t - \pi/6)$	$3\pi/2 \le \omega t \le 11\pi/6$
	=	0	$11\pi/2 \le \omega t \le 2\pi/$

From symmetry, need only consider the function between $0 \leq \omega t \leq \pi/2$, thus,

$$
\begin{aligned}
i_a &= 0, && 0^\circ \leq x \leq \pi/6 \\
&= \sin(x + \pi/6) && \pi/6 \leq x \leq \pi/2 \\
&= \sin(x - \pi/6) && \pi/2 \leq x \leq 5\pi/6 \\
&= 0 && 5\pi/6 \leq x \leq \pi
\end{aligned}
$$

The various harmonic amplitudes b_n are for the above conditions:

$$b_n = \frac{2}{\pi} \int_0^{\pi} i_a(x) \sin nx \, dx,$$

where n is the order of the harmonic. Since the wave form has odd symmetry, there are no cosine terms. Table I lists the odd harmonics up to the 31st.

Table I. Harmonic Content for 3-Phase System

Harmonic Order	Value	Percent
1	1.054	100
3	0	0
5	0.239	22.7
7	0.119	11.3
9	0	0
11	0.095	9.0
13	0.068	6.5
15	0	0
17	0.060	5.7
19	0.048	4.6
21	0	0
23	0.043	4.1
25	0.037	3.5
27	0	0
29	0.034	3.2
31	0.030	2.8

Nine of the harmonics 5th, 7th, 11th, 13th, 17th, 19th, 23rd, 25th and 29th exceed the U.S. Navy 3% maximum (DOD Specification 1399, Section 300).

The rms value of these components is:

$$\sqrt{\Sigma b_n^2} = 1.042$$

Thus, the power factor is the reciprical of the rms value on 0.960 which checks with the previous power factor, see section 2.13.

2.18 Three-Phase Delta-Wye Full-Wave Bridge Rectifier

Since in the previous section several of the harmonics exceeded the Navy specifications, a more complex rectifier bridge circuit was considered.

Figure 2.3 and 2.4 is a schematic of the circuit and the phase diagram for the delta-wye bridge rectifier.

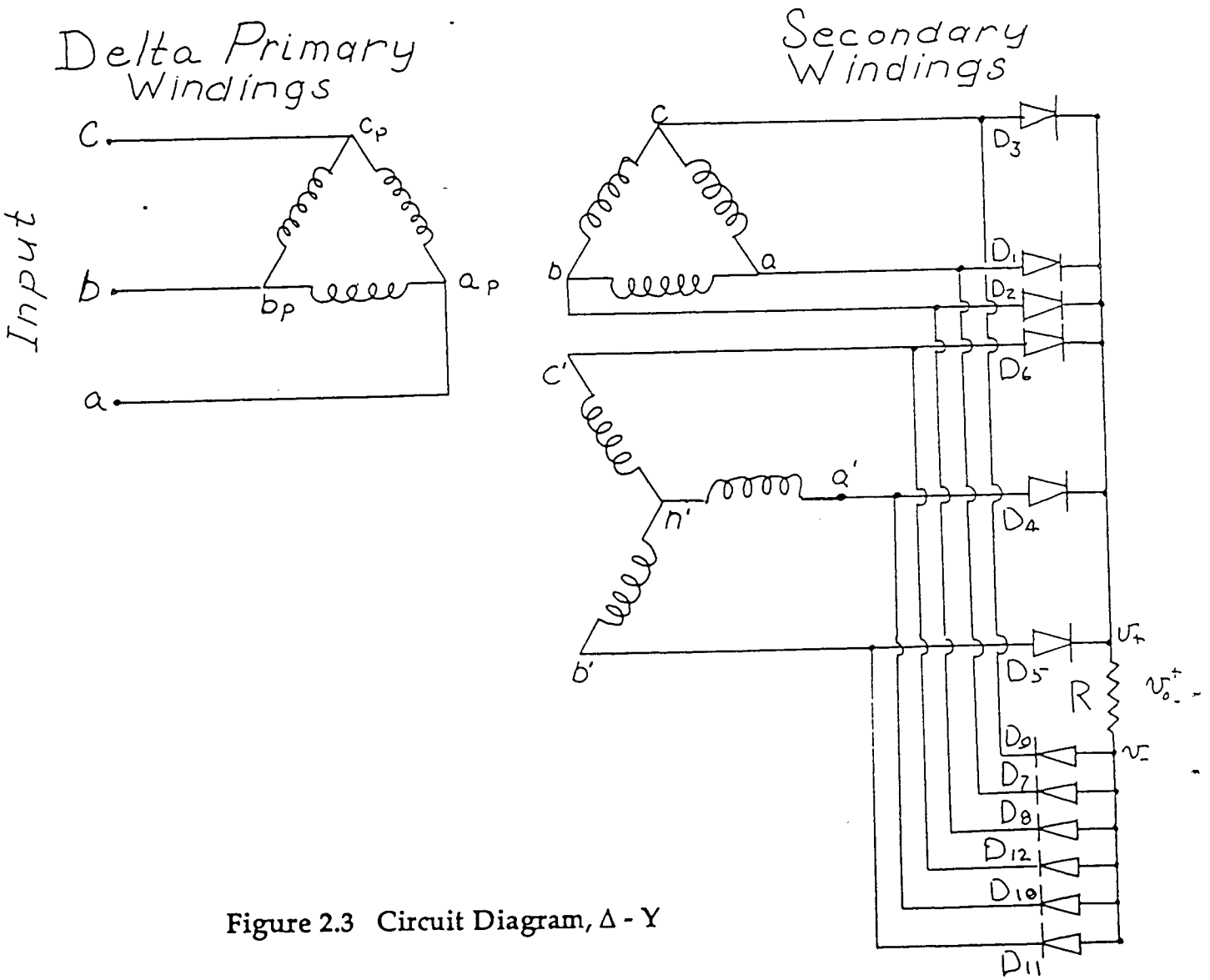

Figure 2.3 Circuit Diagram, Δ - Y

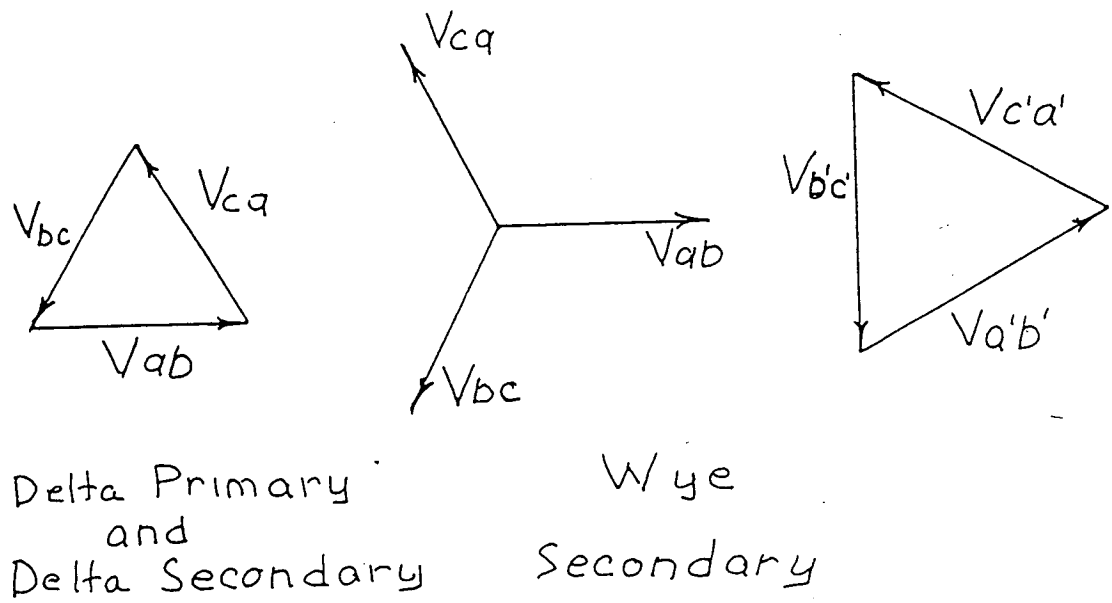

Figure 2.4 Phasor Diagram, Δ - Y

The normalized voltages shown in the figures are:

$$V_{ab} = V_{apbp} = 1\angle 0°$$
$$V_{bc} = V_{bpcp} = 1\angle -120°$$
$$V_{ca} = V_{cpap} = 1\angle -240°$$
$$V_{a'n'} = \sqrt{3}/3\angle 0° \qquad V_{a'b'} = 1\angle 30°$$
$$V_{b'n'} = \sqrt{3}/3\angle -120° \qquad V_{b'c'} = 1\angle -90°$$
$$V_{c'n'} = \sqrt{3}/3\angle -240° \qquad V_{c'a'} = 1\angle -210°$$

Figure 2.5 is a plot of the voltage current wave forms.

The circuit operates in the following manner. Both the delta and the wye secondaries are adjusted so that the phase-to-phase voltages are equal. Therefore, the delta winding must deliver a voltage $\sqrt{3}$ times greater than that of the wye winding, so that the two smaller wye voltages will add vectorially to equal the delta voltage.

At any given instant, the secondary winding (delta) or pair of wye windings with the greatest voltage difference will determine which diodes will conduct.

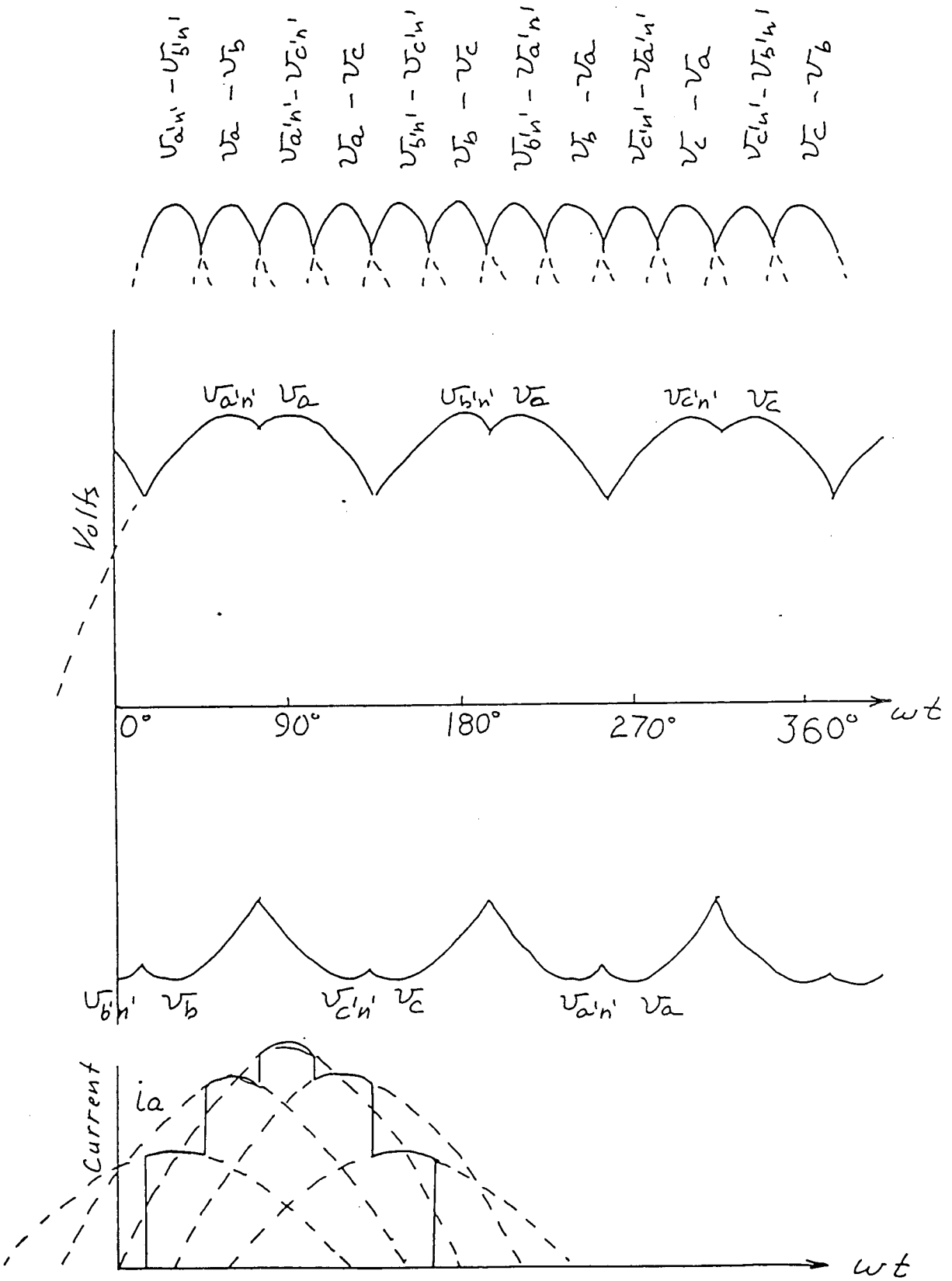

Figure 2.5 Voltage and Current Wave Forms, Δ-Y

For example, between 15° and 45°, $V_{a'n'} - V_{b'n'}$ will be the largest voltage difference, thus, diodes D_4 and D_{11} will conduct. Secondary windings a'n'and n'b' will conduct current. Transformer action will cause primary windings a_p b_p and c_p b_p to conduct. Because $V_{a'n'} = 1/\sqrt{3}$ Vapbp, then I_{apbp} will be $1/\sqrt{3}$ a'n'.

The current i_a between 0° and 15°, flows from C, D_3, R, D_8, to v. Accordingly, the primary current of $\sqrt{3/2}$ flows in from C_p through winding C_{pb} and out bp. Therefore, i_a is zero during this period.

Between 15° and 45°, the secondary current flows from n' through winding a'n' through D_4, R, D_{11} through (winding b'n to n'). Since current flows in two legs of the secondary, current must also flow in two legs of the primary. Thus, a current of 1/2 flows from c_p through winding bpcp and out bp. The other current of 1/2 flows from ap through winding apbp and out bp. During this period current of 1/2 each flows from a_p and c_p and a current of 1 flows out b_p. The value of i_a is +1/2. Similarly, one can construct the entire wave form for i_a.

$$
\begin{aligned}
i_a &= 0, && 0° \le x \le 15° \\
&= 1/2 \sin (x + 60°), && 15° \le x \le 45° \\
&= \sqrt{3/2} \sin (x + 30°), && 45° \le x \le 75° \\
&= \sin x, && 75° \le x \le 105° \\
&= \sqrt{3/2} \sin (x - 30°), && 105° \le x \le 135° \\
&= 1/2 \sin (x - 60°), && 135° \le x \le 165° \\
&= 0, && 165° \le x \le 180°
\end{aligned}
$$

Table II Sequence of Events in the Δ-Y Rectifier

Angle	Max Volts	Diodes Conduct	Sec I	Pri I	i_a	i_b	i_c
0-15°	$v_c - v_b$	3, 8	$b \rightarrow c$	$c_p \rightarrow b_p$	0	$-\sqrt{3/2}$	$+\sqrt{3/2}$
			$b' \rightarrow n'$	$c_p \rightarrow b_p$		-1/2	+1/2
15°-45°	$v_{a'} - v_{b'}$	4, 11	$n' \rightarrow a'$	$a_p \rightarrow b_p$	+1/2	-1/2	
45°-75°	$v_a - v_b$	1, 8	$b \rightarrow a$	$a_p \rightarrow b_p$	$+\sqrt{3/2}$	$-\sqrt{3/2}$	0
			$c' \rightarrow n'$	$a_p \rightarrow c_p$	+1/2		-1/2
75°-105°	$v_{a'} - v_{c'}$	4, 12	$n' \rightarrow a'$	$a_p \rightarrow b_p$	+1/2	-1/2	
105°-135°	$v_a - v_c$	1, 9	$c \rightarrow a$	$a_p \rightarrow c_p$	$+\sqrt{3/2}$	0	$-\sqrt{3/2}$
			$c' \rightarrow n'$	$a_p \rightarrow c_p$	+1/2		-1/2
135°-165°	$v_{b'} - v_{c'}$	5, 12	$n' \rightarrow b'$	$b_p \rightarrow c_p$		+1/2	-1/2
165°-195°	$v_b - v_c$	2, 9	$c \rightarrow b$	$b_p \rightarrow c_p$	0	$+\sqrt{3/2}$	$-\sqrt{3/2}$
			$a' \rightarrow n'$	$b_p \rightarrow a_p$	-1/2	+1/2	
195°-225°	$v_{b'} - v_{a'}$	5, 10	$n' \rightarrow b'$	$b_p \rightarrow c_p$		+1/2	-1/2
225°-255°	$v_b - v_a$	2, 7	$a \rightarrow b$	$b_p \rightarrow c_p$	$-\sqrt{3/2}$	$+\sqrt{3/2}$	0
			$a' \rightarrow n'$	$b_p \rightarrow a_p$	-1/2	+1/2	
255°-285°	$v_{c'} - v_{a'}$	6, 10	$n' \rightarrow c'$	$c_p \rightarrow a_p$	-1/2		+1/2
285°-315°	$v_c - v_a$	3, 7	$a \rightarrow c$	$c_p \rightarrow a_p$	$-\sqrt{3/2}$	0	$+\sqrt{3/2}$
			$b' \rightarrow n'$	$c_p \rightarrow b_p$		-1/2	+1/2
315°-345°	$v_{c'} - v_{b'}$	6, 11	$n' \rightarrow c'$	$c_p \rightarrow a_p$	-1/2		+1/2
345°-360°	$v_c - v_b$	3, 8	$b \rightarrow c$	$c_p \rightarrow b_p$	0	$-\sqrt{3/2}$	$+\sqrt{3/2}$

2.19 Δ - Y Line Current Harmonics

The line harmonic b_n is

$$b_n = \frac{2}{\pi} \int_0^{\pi} i_a \sin nx \, dx .$$

Table 4 lists the harmonics of the Δ -Y full wave bridge rectifier.

Table 4 Harmonic Content for Delta-Wye Bridge Rectifier

Harmonic Order	Value	Percent
1	0.977	100
3	0	0
5	0	0
7	0	0
9	0	0
11	0.095	9.8
13	0.068	7.0
15	0	0
17	0	0
19	0	0
21	0	0
23	0.043	4.4
25	0.037	3.8
27	0	0
29	0	0
31	0	0
35	0.028	2.8

The power factor is the square root of the sum of the percent harmonics. Which for the delta-wye system is 0.99.

2.20 Delta-Wye Output Voltage

$$V_0 \text{ (rms)} = \sqrt{v_0^2}$$

From wave form symmetry we can integrate the portion of the voltage wave form between 0 and $\pi/12$ where:

$$\overline{v_0^2} = \frac{1}{\frac{\pi}{12}} \int_0^{\frac{\pi}{12}} V_{op}^2 \cos^2 x \, dx ,$$

$$V_{0p} = \sqrt{3}\ V_{ap} = \sqrt{6}\ V \ .$$

$$\overline{v_0^2} = 0.9775$$

$$V_0 \text{ (rms)} = 0.9888$$

$$V_{0,\,d.c.} = v_0 = \frac{1}{\frac{\pi}{12}} \int_0^{\frac{\pi}{12}} V_{op} \cos x \, dx$$

$$= 0.9885\ V_{op} .$$

The voltage ripple

$$V_{0\,r} = V_{op} \sqrt{V_0^2 - V_{0\,d.c.}^2} = 0.016\ V_{op}$$

$$\% \text{ Ripple} = 1.6\% .$$

3.0 Discussion

3.1 Electrical Circuit Parameters

U.S. Naval ships provide 115 volts a.c. 60 Hz three phase delta. The voltage V, the phase to neutral voltage is $115/\sqrt{3}$ (if there was a neutral). The peak output voltage V_{op} will be $\sqrt{6}\ V = \sqrt{6} \times 115/\sqrt{3} = 162.6$ volts.

For the three phase full wave rectifier bridge the d.c. output voltage $V_{0,\,d.c.} = 0.955\ V_{op} = 155$ volts. The d.c. current $I_{0\ d.c.}$ is based upon driving 600 F17 T12 lamps, where each lamp draws 15 watts, or 97 ma. The total current for each rectifier circuit is 58.2 amperes. The load R is 2.66 ohms.

The d.c. voltage $V_{0,d.c.}$, for the delta-wye full wave rectifier is equal to $0.988\ V_{op} = 161$ volts. The current drawn by each ballast is 93.2 ma. The total current drawn by 600 lamps is 57.8 amperes. The load·R is 2.79 ohms.

3.2 System Efficiency

3.2.1 Three Phase System

The only significant loss will be the rectifier's foward voltage drop. At any given time two diodes will be conducting, each having a foward voltage drop of 0.5 volts for a total of 1.0 volts. The losses would then be 1.0 x 58.2 = 58.2 watts. The total input power is 155 x 58.2 = 9,021 watts. The output power is 8963 watts for an efficiency of 99.4%

3.2.2 Delta-Wye System

The delta-wye system requires either two transformers on one transformer with two sets of secondary windings. The transformers are typically 98% efficient. This system requires 12 diodes but only two will be conducting at any time. Therefore, the rectifier efficiency is 99.4% The overall efficiency will be 97.4%

3.3 D.C. Operating Voltage

The d.c. output voltage for either system is about 160 volts. We were concerned if this was a suitable input voltage for the oscillator circuit which drives the lamps. We contacted three solid-state ballast developers and we're informed any d.c. voltage below 250 volts would present no problem.

3.4 Panel Size

Presently existing 20 watt fluorescent lamps with the present low power factor ballast draw 0.38 amperes. A high power factor high frequency system operating the F17 T-12 lamps will provide the same light output drawing only 0.1 amperes. For a 50% circuit loading, a 20 ampere branch can operate 26 standard lamp systems while the 155 volt d.c. 20 ampere branch will operate 100 lamps.

Direct current panels will have only two buses, positive and negative. A 100 ampere panel loaded to 60% can feed six 10 ampere branches. At 0.1 ampere per lamp, each branch can operate 100 lamps for a total of 600 lamps for each panel. A medium sized ship with 6000 lamps would require ten 100 ampere panels. It would be most convenient to rectify the 115 volt a.c. at the 100 ampere panel and distribute the d.c. locally to the six branch circuits. This approach appears more reasonable than employing a single 1000 ampere rectifier and distributing the d.c. throughout the ship.

3.5 Emergency Lighting

Although Naval ships have back up generators, further back-up for lighting key areas are possible with this d.c. system. It is possible to employ individual batteries and key fixtures that operate a lamp for a considerable amount of time. During normal operation, the battery can be charging, thus, some illumination would be available immediately after a generator failure.

3.6 System Cost

3.6.1 Three-Phase System

For the 100 ampere service, we selected to estimate the costs using the 1N2789 rectifier which is rated at 50 amperes, 400 peak inverse voltage. This rectifier cost $1.90 each in quantities of 1,000 or more. This rectifier is adequate since each diode conducts only 1/3 of the time and the peak current rating of the 1N2789 is 600 amperes.

The three phase full wave bridge rectifier requires six diodes or $11.40 per 100-ampere panel. The component cost per lamp, for operating 600 lamps, is $0.019. The cost is virtually negligible per lamp. As we will discuss later, to meet the harmonic content criteria, some filtering will be required and will add to the above cost estimate.

3.6.2 Delta-Wye System

The delta-wye system will require twelve rectifiers and the component cost will be $22.80 per 100 ampere panel. This system will also require a 16 KVA three-phase transformer with two secondary windings, costing $450. The total component cost is $472.80 or $0.79 per lamp.

3.7 Comparison of Systems

Table I list the value of parameters of interest for both systems.

Both systems have suitable characteristics with regard to ripple, power factor, efficiency. The three-phase system has the higher efficiency and a much lower cost. The delta-wye system exceeds the performance of the three-phase system in the remaining parameter (harmonics).

One important specification that is violated for both systems is the harmonic content. However, the delta-wye system has no 5th, 7th, 13th and 15th components.

The harmonic cancellation is theoretical and depends upon exactly matching the delta and wye output voltages. A mismatch will generate some 5th and 7th harmonics; the amplitude will depend upon the severity of the mismatch.

Regardless, both systems will require some filtering. It is not possible to determine whether the delta-wye system with light filtering will be superior to the single full-wave bridge with heavy filtering. This will have to be determined experimentally.

Table I Comparing 3-Phase and Delta-Wye Systems

Parameter	Three Phase	Delta-Wye
dc Voltage (Volts)	155	161
(Amps)	100	100
% Ripple (%)	4.2	1.6
Power Factor	0.957	0.990
Efficiency (%)	99.4	97.4
Cost ($/lamp)	0.019	0.79
Harmonics (%)		
	22.7 (5)	9.8 (11)
	11.3 (7)	7.0 (13)
	9.0 (11)	4.4 (23)
	6.5 (13)	3.8 (25)
	5.7 (17)	2.8 (2.8)
	4.6 (19)	
	4.1 (23)	
	3.5 (25)	
	3.2 (29)	
	2.8 (31)	

4.0 Lighting System

Figure 4.1 is a schematic drawing of the lighting system that shows a single 100 ampere panel. The schematic includes an emergency system in which the battery can maintain a group of lamps (dotted box), or can be placed at the site of the desired lamp. The above suggestion would not eliminate the need to filter the above bridge rectifiers.

The high efficiency indicates that this concept will further increase system efficiency, however the excess harmonics must be addressed. New tasks must be added for FY1988 and include: 1) experimentally determining a filter to reduce to harmonics; 2) characterizing the high frequency operating conditions for the F17 T-12 fluorescent lamp to provide guidelines for designing the oscillator circuit and 3) selecting one or two possible vendors to submit an oscillator circuit for operating the efficient Navy F17 T-12 lamp.

These tasks will provide the information to determine the feasibility of the proposed centralized lighting system.

5.0 Recommendations and Prognosis

The centralized lighting system with respect to the rectifying system appears to be an attractive approach. The cost and reliability of this portion of the system are very attractive. One important question is the requirement for filtering the harmonics that exceed the U.S. Naval specifications.

It would be of interest to review the technical aspects of the harmonic specifications, i.e., the 3% limit to all harmonics. Since a power distribution system impedance is usually inductive, the magnitude of the impedance will rise with frequency and be most susceptible to higher frequencies. For example, a 5% 3rd current harmonic would cause far less voltage distortion than would a 2% 31st current harmonic. It may be more logical to apply a maximum permissible limit which varies as K/n, where n is the harmonic order and K is a constant not yet determined.

The above suggestion would not eliminate the need to filter the above bridge rectifiers.

The high harmonic content indicates the next tasks must include: 1) experimentally determining a filter to reduce to harmonics, 2) characterizing the high frequency operating conditions for the F17 T-12 fluorescent lamp to provide guidelines for designing the oscillator circuit and 3) selecting one or two possible vendors to submit an oscillator circuit for operating the efficient Navy F17 T-12 lamp.

This task will provide the information to determine the feasibility of the proposed centralized lighting system.

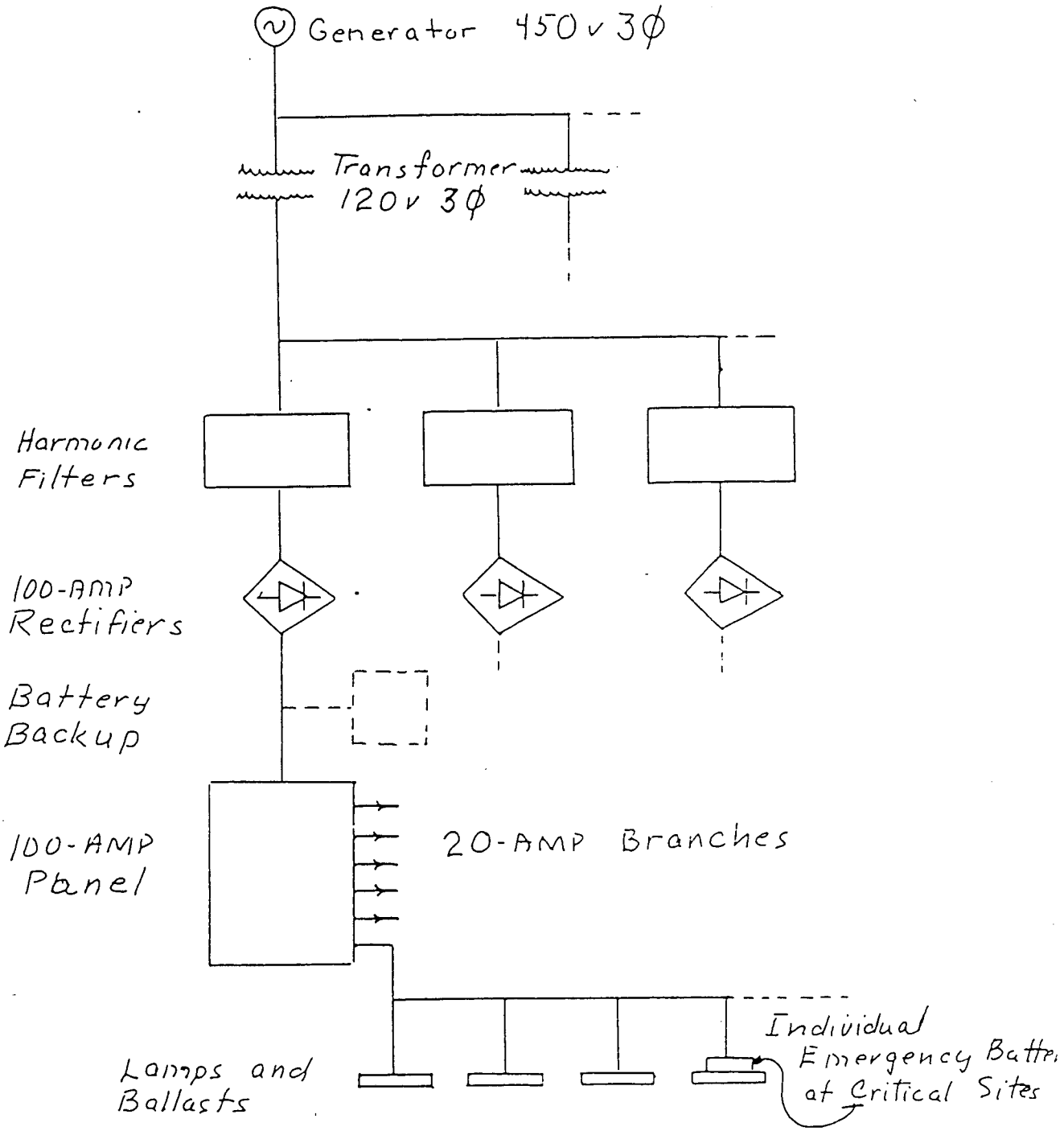

Figure 4.1 Schematic Layout of Central Lighting System

LAWRENCE BERKELEY LABORATORY
UNIVERSITY OF CALIFORNIA
INFORMATION RESOURCES DEPARTMENT
BERKELEY, CALIFORNIA 94720