LBL-2505 c.2

MECHANICAL COMPONENTS FOR AUTOMATIC ELLIPSOMETER

W. T. Giba and R. H. Muller

May 1974

Prepared for the U. S. Atomic Energy Commission
under Contract W-7405-ENG-48

TWO-WEEK LOAN COPY

This is a Library Circulating Copy which may be borrowed for two weeks.

[redacted]

LAWRENCE BERKELEY LABORATORY • UNIVERSITY OF CALIFORNIA • BERKELEY

37

LBL-2505 c.2

DISCLAIMER

This document was prepared as an account of work sponsored by the United States Government. While this document is believed to contain correct information, neither the United States Government nor any agency thereof, nor the Regents of the University of California, nor any of their employees, makes any warranty, express or implied, or assumes any legal responsibility for the accuracy, completeness, or usefulness of any information, apparatus, product, or process disclosed, or represents that its use would not infringe privately owned rights. Reference herein to any specific commercial product, process, or service by its trade name, trademark, manufacturer, or otherwise, does not necessarily constitute or imply its endorsement, recommendation, or favoring by the United States Government or any agency thereof, or the Regents of the University of California. The views and opinions of authors expressed herein do not necessarily state or reflect those of the United States Government or any agency thereof or the Regents of the University of California.

MECHANICAL COMPONENTS FOR AUTOMATIC ELLIPSOMETER

W. T. Giba and R. H. Muller

Inorganic Materials Research Division, Lawrence Berkeley Laboratory
and Department of Chemical Engineering; University of California
Berkeley, California 94720

ABSTRACT

The optical train of a self-compensating ellipsometer has been constructed with the components of a commercial manual ellipsometer and two newly-built Faraday cells. All the components have been provided with devices that facilitate their alignment. They have been arranged on a new base in order to provide space for the placement of the Faraday cells and for the use of large experimental equipment.

INTRODUCTION

The construction of a self-compensating, automatic ellipsometer[1-3] has required the addition of Faraday rotators to the optical components of a previously-used manual ellipsometer.[4] This addition has made it necessary to re-arrange the components.

It was also desired to provide more space than had been obtained in a previous modification[5] of the commercial instrument for the containment of the specimen and to allow the use of vessels of varying size and geometry to conduct in situ observations e.g., in fluid flow-channels, vacuum chambers[6] or furnaces.

In order to maintain flexibility of use, it was decided to provide for operation with widely varying angles of incidence (20°-90°) of the light on the specimen surface. To circumvent the need for the repeated alignment of individual optical components, the components have been collectively mounted in a subassembly each for the incident and reflected light beams. These sub-assemblies can also be detached from the present table for use on other equipment. Since in practice the angle of incidence remains constant for extended periods, its adjustment by auto-collimation with a polygon-supported mirror was considered satisfactory. No divided angle-of-incidence circle has, therefore, been provided.

The alignment of components with respect to the axes of incident and reflected light beams as well as the adjustment of azimuth circles with respect to the plane of incidence requires tedious procedures but can be very important for the validity of ellipsometer measurements. The execution of alignments and adjustments has been greatly

facilitated by the addition of devices for the controlled motion of components in different directions.

The increased over-all dimension of the ellipsometer called for particular attention to freedom from elastic deformation and vibration. This prupose has been realized very satisfactorily in the present construction.

In the following, detailed descriptions of the mechanical modification and placement of the ellipsometer components are given. All mountings for components are designed for sturdiness and flexibility for adjustment.

TELESCOPE MOUNTINGS

New holders for polarizer and analyzer telescopes are illustrated in Figs. 1 and 2. They are designed to provide rigid support for collimator and telescope, that also contain the azimuth circles of polarizer and analyzer prisms.

A wide base-plate H (Figs. 1 and 2) with two elongated holes G permit translatory lateral adjustment and solid connection to the flat sub-assembly base plate (A and C, Fig. 7) with two bolts. Lock-screws contacting the modified double V-block C (Figs. 1 and 2) allow rotatory lateral fine adjustment around pivot A. Translatory vertical alignment is accomplished by use of two push screws E and two pull screws D in the vertical adjustment plates I and J in conjunction with the tilt adjustment screw A that is used alone for rotatory vertical alignment. The telescope is moved by flexing the upper plate in hinge-like motion at the bending arch B, that leaves 1/16 in. of material at the thinnest spot over the entire width of the plate, and is held solidly in place by two additional pull screws.

Azimuth circle adjustment is achieved with two knurled-head tangent screws F that contact a lip K screwed to the circle housing. The tangent screws are also used to lock the adjusted azimuth position.

QUARTER WAVE PLATE MOUNTING

The new mounting for the azimuth circle of the quarter wave plate is illustrated in Figs. 3-5. A wide base-plate with two elongated holes D again provides for a stable adjustable connection to the sub-assembly plate. Vertical and tilt adjustment is accomplished by three push screws C and two pull screws B. Azimuth circle adjustment is obtained with two tangent screws A that engage lip E. The divided circle I is clamped on locating part G. Friction in the bearing for rotation is adjusted with nut H.

FARADAY CELL MOUNTING

The holders for the Faraday solenoids are illustrated in Fig. 6 and can also be seen in Fig. 8. Elongated holes A in a large base plate B allow coarse alignment in the horizontal plane. Precise alignment in horizontal and vertical direction is effected by a pair of screws C at each end of the solenoid. The position is secured by two metal straps with tightener E. Two horizontal bolts F also hold the solenoid in place.

SUB-ASSEMBLIES

In order to obtain the greatest possible flexibility for use of the ellipsometer with different experimental equipment, the optical components have been collected in two sub-assemblies that rest on two pairs of base plates (A,B and C,D in Figs. 7 and 8).

One sub-assembly contains light-source, collimator with polarizer and diaphragm, Faraday cell, quarter wave plate, and an iris diaphragm; the other sub-assembly contains Faraday cell with diaphragm, and telescope with analyzer, diaphragm and photodetector (Fig. 8). All the optical components, except for the light source are solidly mounted to the upper base plates (A and C). These plates can be raised up to 5 in. with the alignment being maintained by the guides E and F. The lower base plates are attached to the surface of the table. They can easily be moved to produce different angles of incidence or to accommodate different-sized experiments. The sub-assemblies are also suitable for use with horizontal specimen surfaces. The light source rests on a carriage with freedom for adjustment in horizontal (axial, lateral) and vertical direction.

TABLE

A rigid table, that has been built to support both sub-assemblies with angles of incidence of 20°-90°, is illustrated in Fig. 9. The table consists of a welded steel frame and an aluminum table top. The main section of the frame C is constructed from 3 in. square steel tubing (3/16 in. thick). Bracings D are made of 3×2 in. rectangular tubing. A 1 in. thick aluminum tooling plate forms the table top E that is without direct contact with the steel frame. Instead, where bolts connect the plate to the frame, 1/32 in. thick Teflon spacers, sandwiched between two brass shims, have been inserted. One bolt, located in a central position holds the plate firmly in place. All other bolts hold the plate under tension, employing a flat washer and on top of it a spherical washer under the bolt head. This permits lateral movement of the plate due to thermal expansion and prevents warping. The ground top surface of the plate has been leveled to be flat within 0.002 in. and has not been affected by temperature fluctuations.

A cutout F in the table top under the intsection of the optical axes provides access for flow and vacuum equipment. The table can be transported on three casters A and, when in place, is levelled by three screw-jacks B.

ACKNOWLEDGEMENTS

This work was conducted under the auspices of the U. S. Atomic Energy Commission.

REFERENCES AND NOTES

1. H. J. Mathieu, D. E. McClure and R. H. Muller, Rev. Sci. Instr. 45, (June 1974).
2. H. J. Mathieu, D. E. McClure and R. H. Muller, Self-Compensating Automatic Ellipsometer Manual, LBL-1478, July 1973.
3. H. J. Mathieu and R. H. Muller, Faraday Cell Solenoids for Automatic Ellipsometers, LBL-1836, August 1973.
4. Model L-119 Ellipsometer, Gaertner Scientific Corporation, Chicago, Illinois.
5. Inorganic Materials Research Division, Lawrence Radiation Laboratory, Annual Report 1967, UCRL-18043, March 1968, p. 47.
6. R. H. Muller, R. F. Steiger, G. A. Somorjai and J. M. Morabito, Surface Science 16, 234 (1969).

FIGURE CAPTIONS

Fig. 1. Telescope mounting.

A - Swivel point for tilt adjustment screw.

B - Bending arch in vertical alignment plate.

C - Two telescope lock screws for lateral alignment on double V-neck.

D - Two pull screws for vertical alignment plate.

E - Two push screws for vertical alignment plate.

F - Adjustment screws for azimuth circle.

G - Slotted holes for lateral alignment.

H - Base plate.

I - Upper vertical alignment plate.

J - Lower vertical alignment plate.

K - Lip for azimuth adjustment.

Fig. 2. Telescope mounting, symbols as in Fig. 1.

Fig. 3. Quarter-wave plate mounting.

A - Azimuth circle adjustment screws.

B - Pull screws for vertical alignment (2).

C - Push screws for vertical alignment (3).

D - Slotted holes for mounting and lateral alignment.

E - Lip for azimuth adjustment.

F - Bearing surface for azimuth circle rotation.

G - Locating part for azimuth circle.

H - Nut for friction control of azimuth bearing.

I - Azimuth circle.

Fig. 4. Quarter-wave plate mounting. Symbols as in Fig. 3.

Fig. 5. Quarter-wave plate mounting with azimuth circle attached. Symbols as in Fig. 3.

Fig. 6. Faraday cell mounting.

A - Elongated holes for lateral alignment.

B - Base plate for mounting to sub-assembly.

C - Alignment screws.

D - Flange of solenoid.

E - Tightener for metal straps.

F - Horizontal bolts.

Fig. 7. Sub-assembly plates for ellipsometer components.

A and B - Upper and lower plates for reflected-light sub-assembly.

C and D - Upper and lower plates for incident-light sub-assembly.

E,F - Guides for height-variation of upper sub-assembly plates.

Fig. 8. Sub-assemblies of optical components in use.

A to F - as in Fig. 7

G - Mounting for analyzer telescope

H - Mounting for analyzer Faraday cell

I - Quarter-wave plate mounting

J - Mounting for polarizer Faraday cell

K - Mounting for polarizer telescope (collimator)

L - Table top

M - Reflecting specimen surface (electrode) in flow channel.

Fig. 9. Table for support of ellipsometer sub-assemblies.

A - Casters (3 in.) mounted on 4×1-5/8 in. steel channel.

B - Screw jacks in threaded steel blocks, welded in place.

C - Square steel tube, 3×3×3/16 in.

D - Rectangular steel tube, 3×2×3/16 in.

E - Table top, 1 in. aluminum tooling plate.

F - Cutout in table for experiment.

⊗ - Location of 1/2 in. bolt that holds table top to frame in one point.

X - Location of 1/2 in. bolts with spherical washers and Teflon sheet to permit thermal expansion.

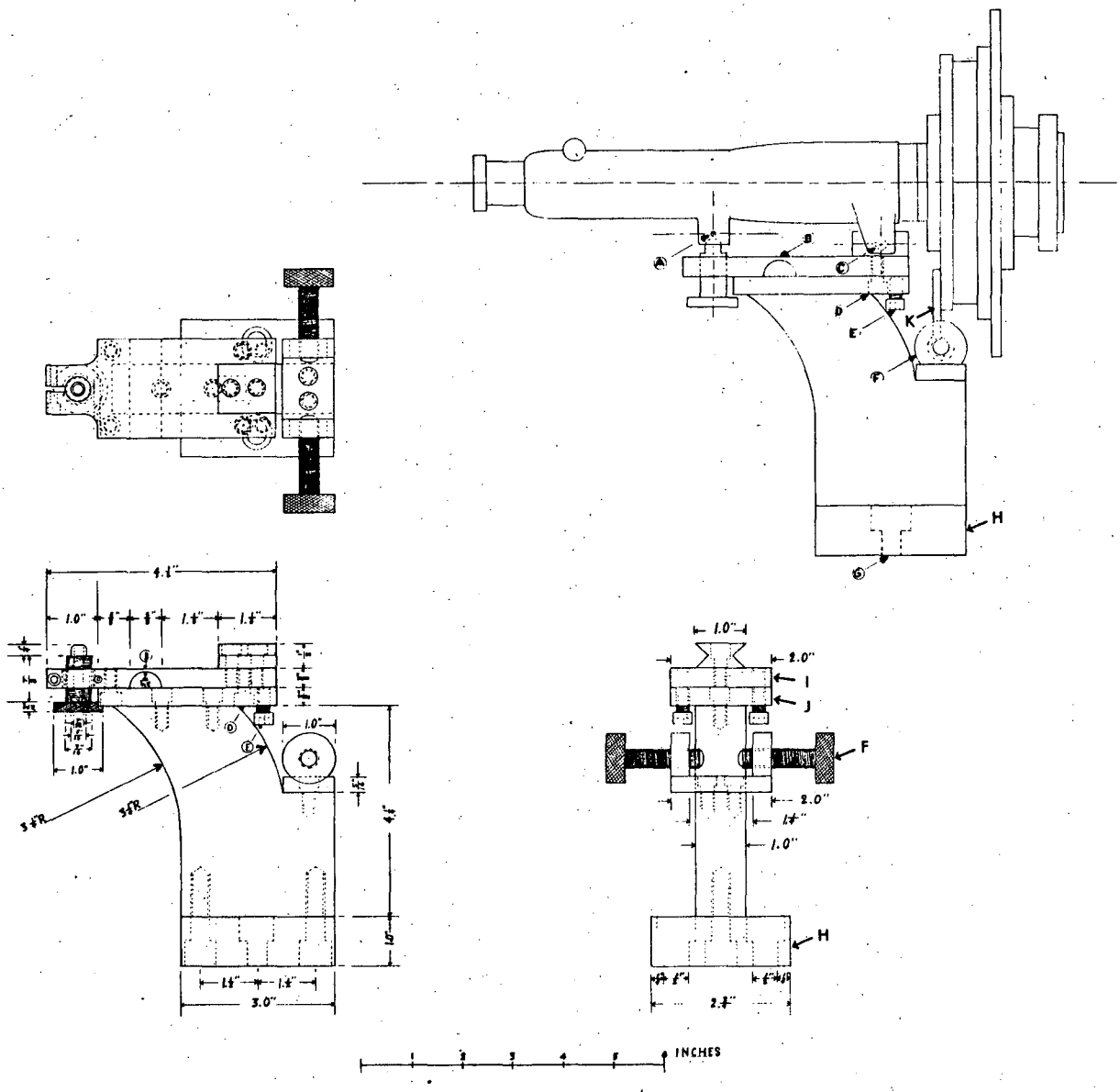

XBL 7312-6861 A

Fig. 1

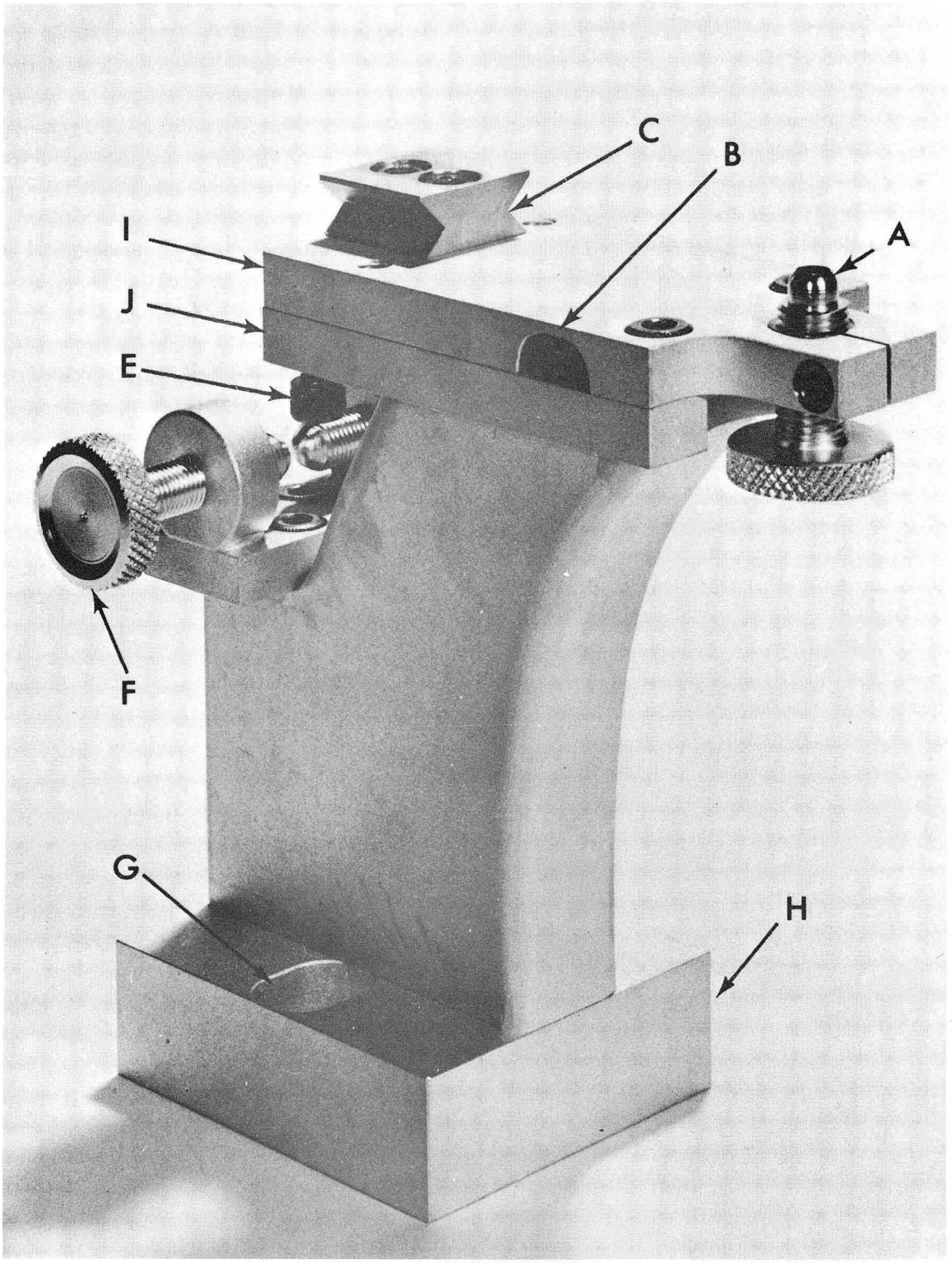

XBB 723-1585A

Fig. 2

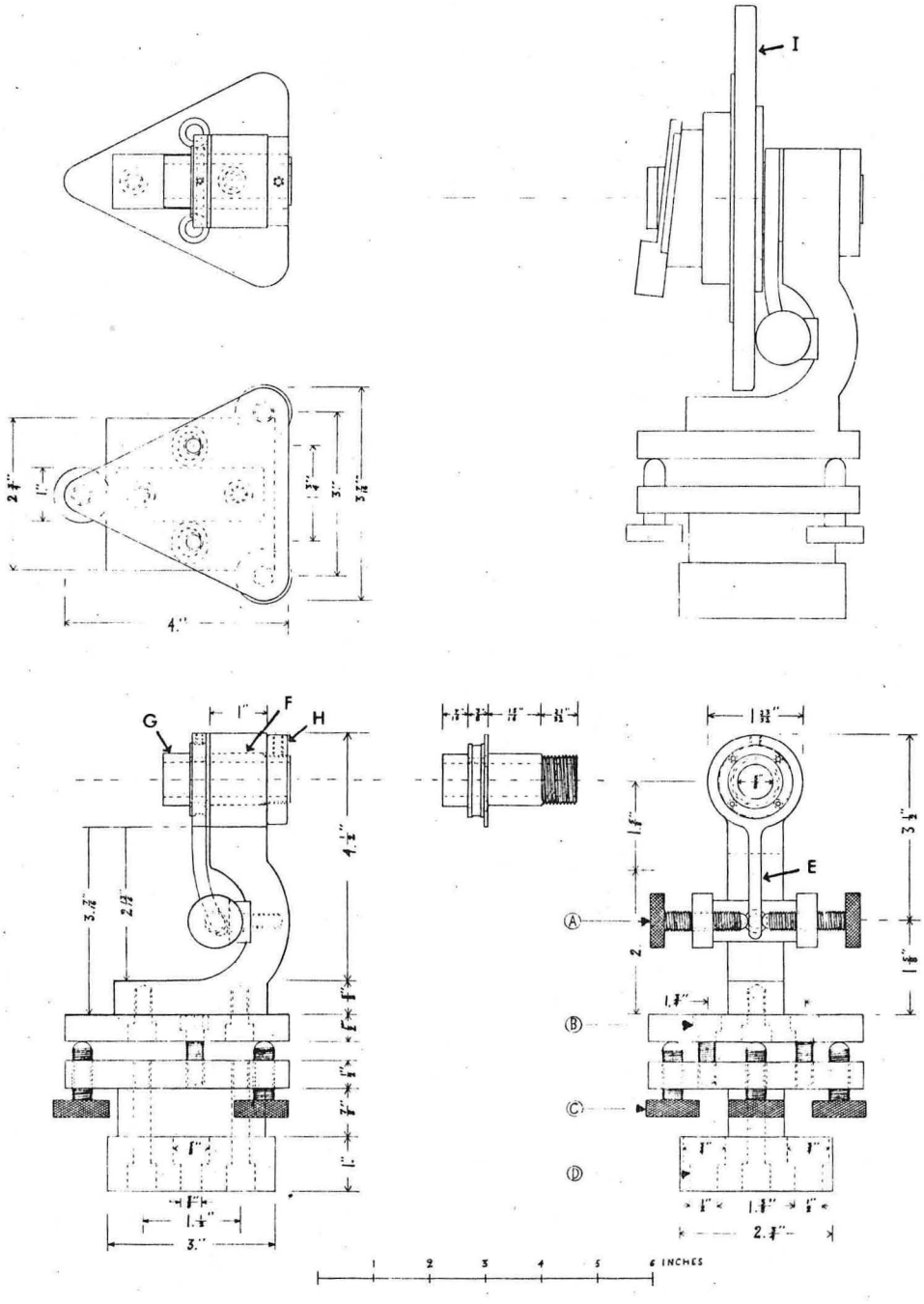

XBL 7312-6858 A

Fig. 3

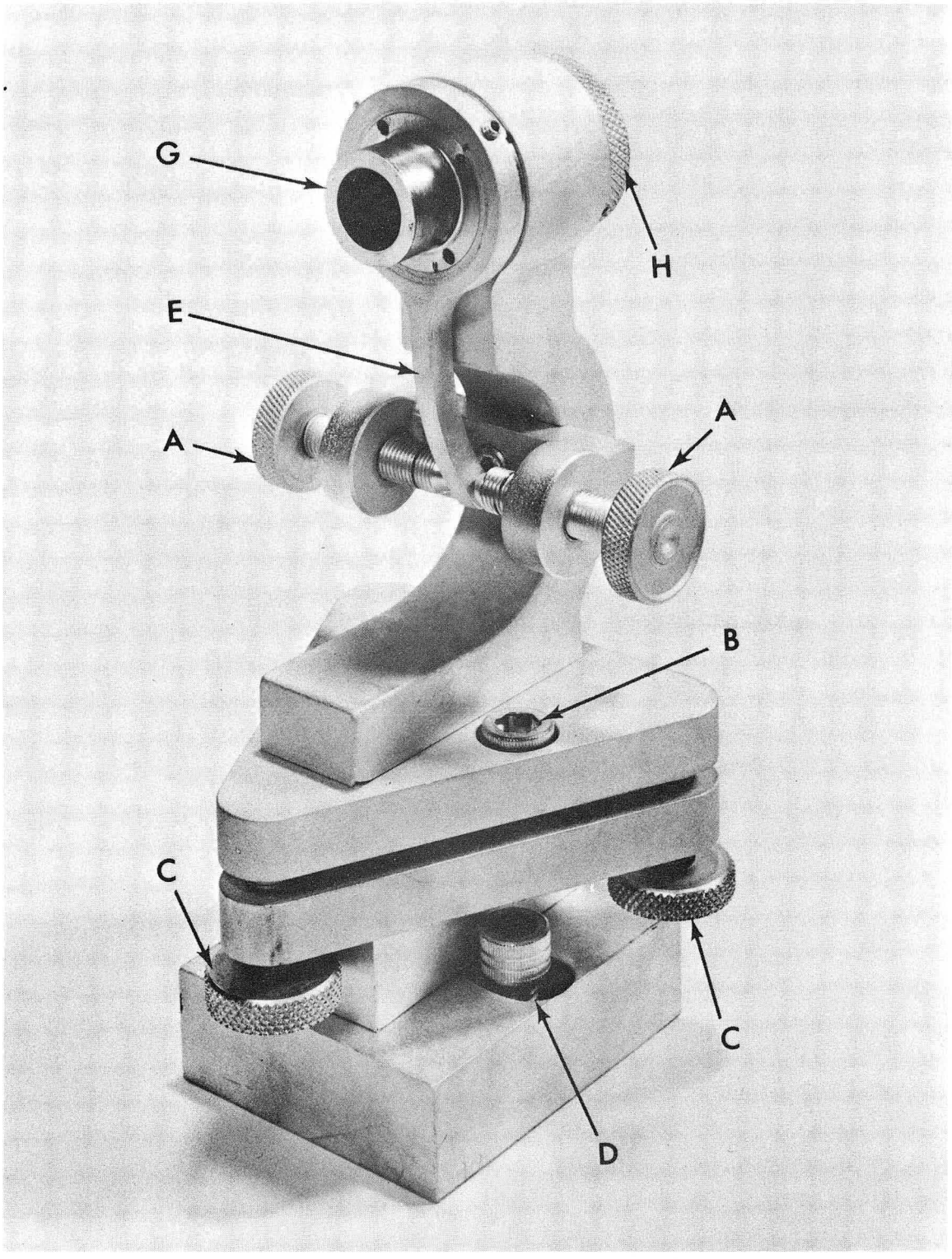

XBB 743-1430A

Fig. 4

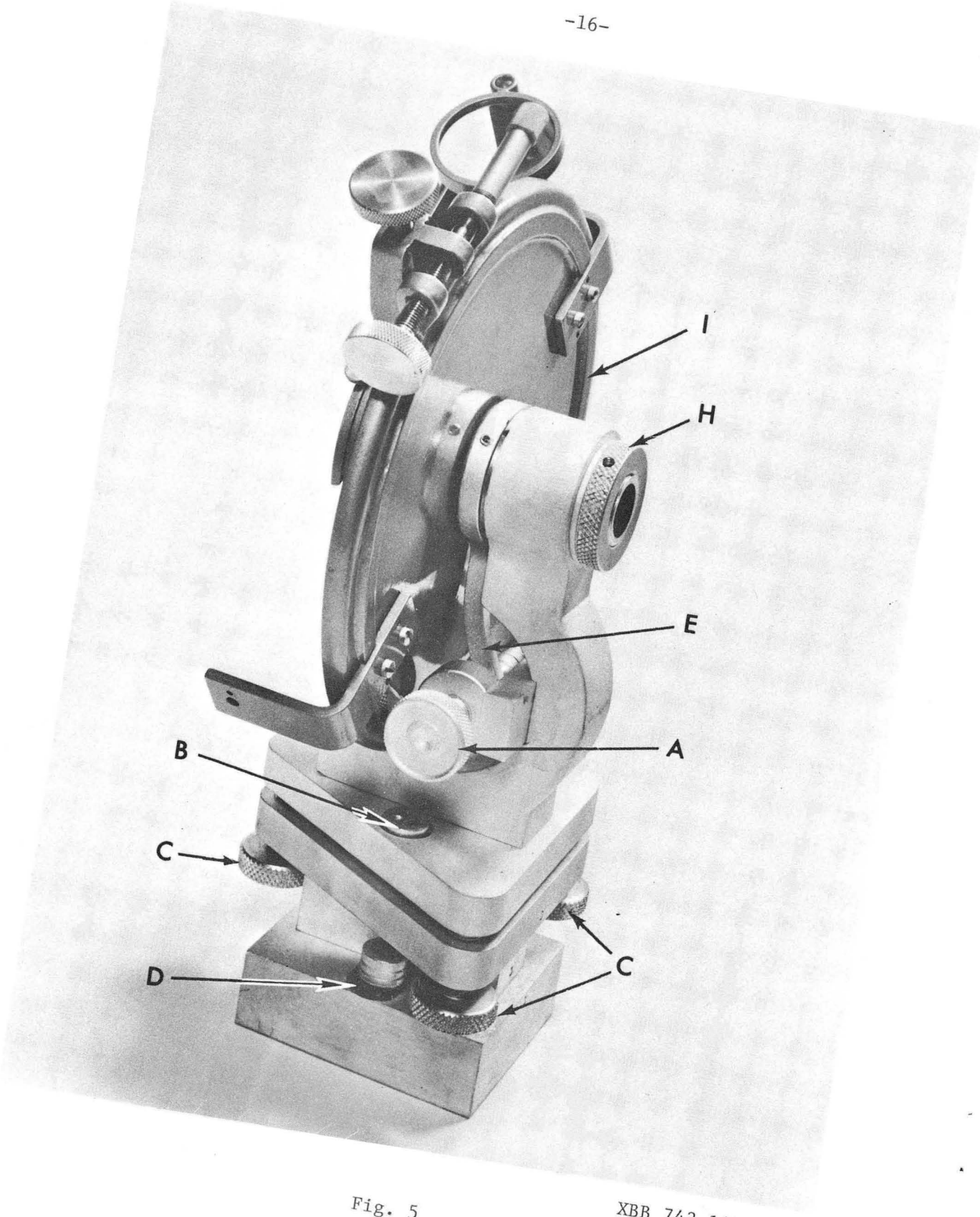

Fig. 5 XBB 743-1431A

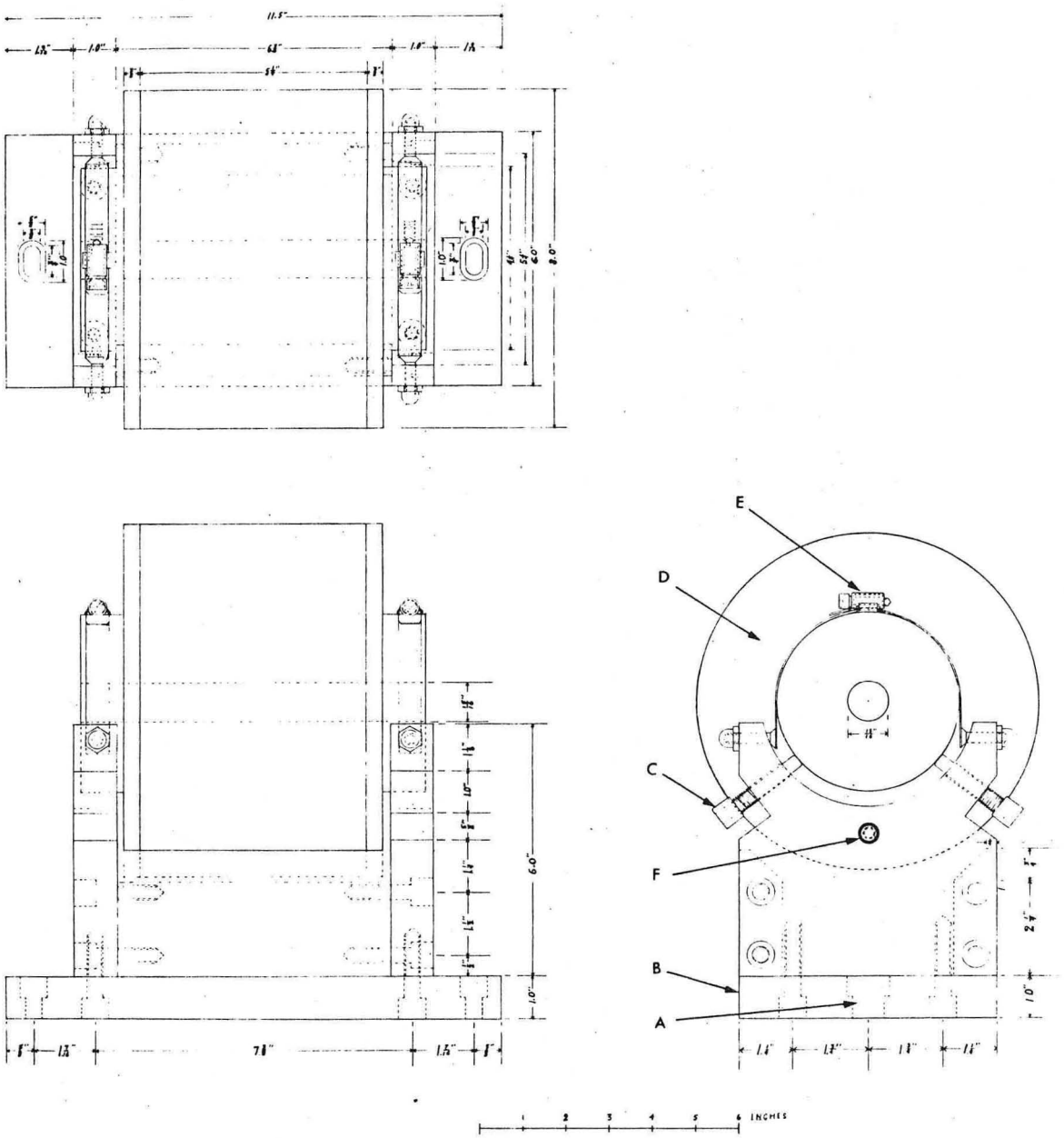

XBL 7312-6860 A

Fig. 6

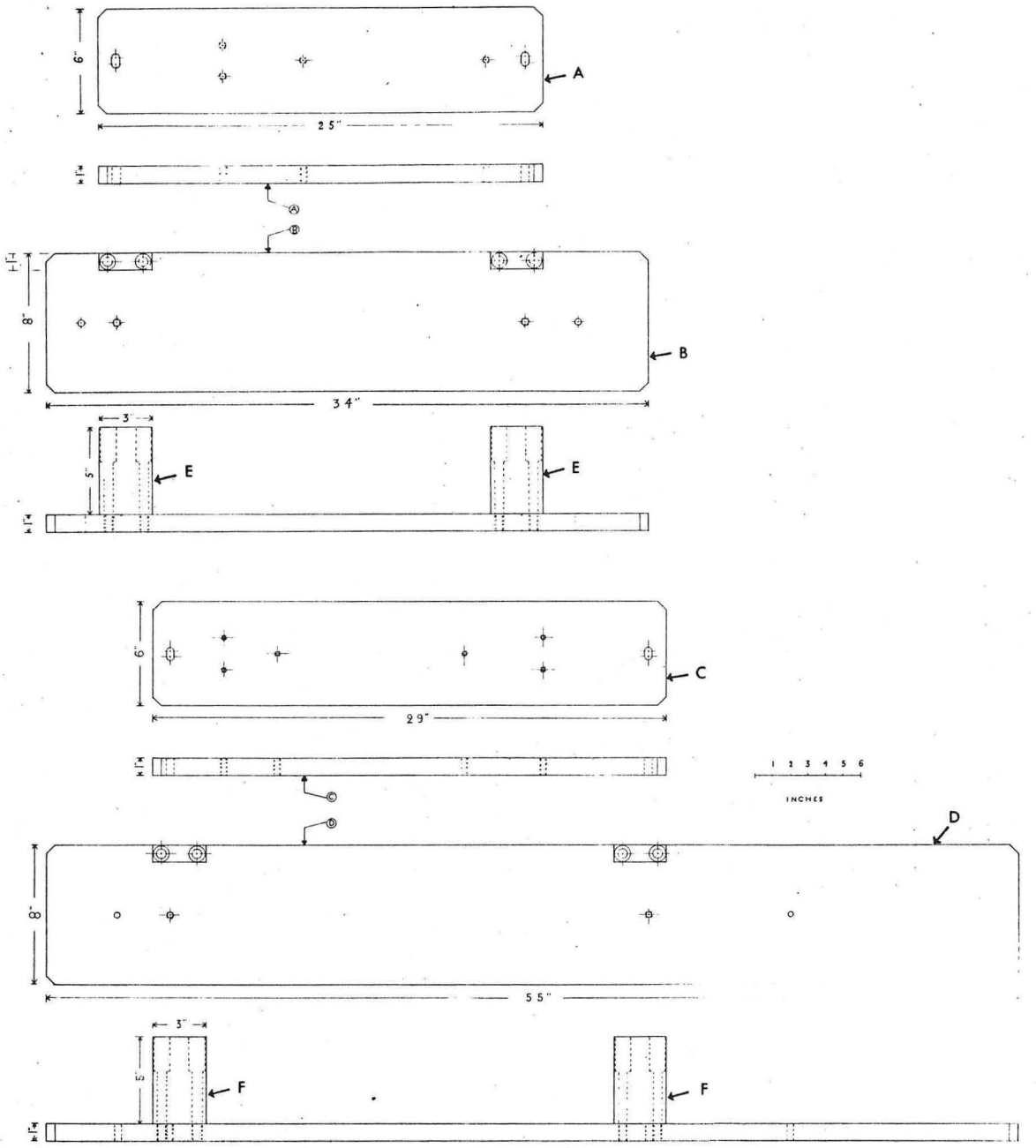

XBL 7312-7233 A

Fig. 7

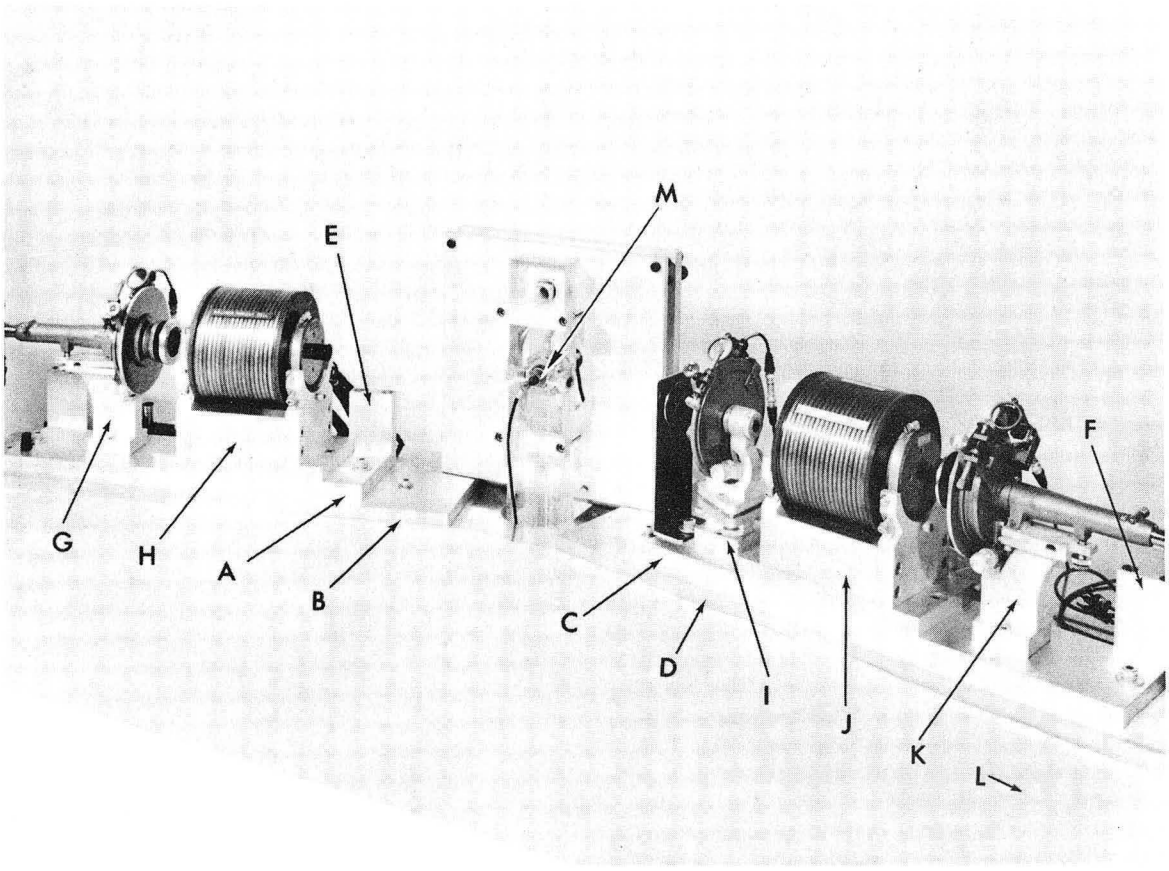

XBB 743-1660A

Fig. 8

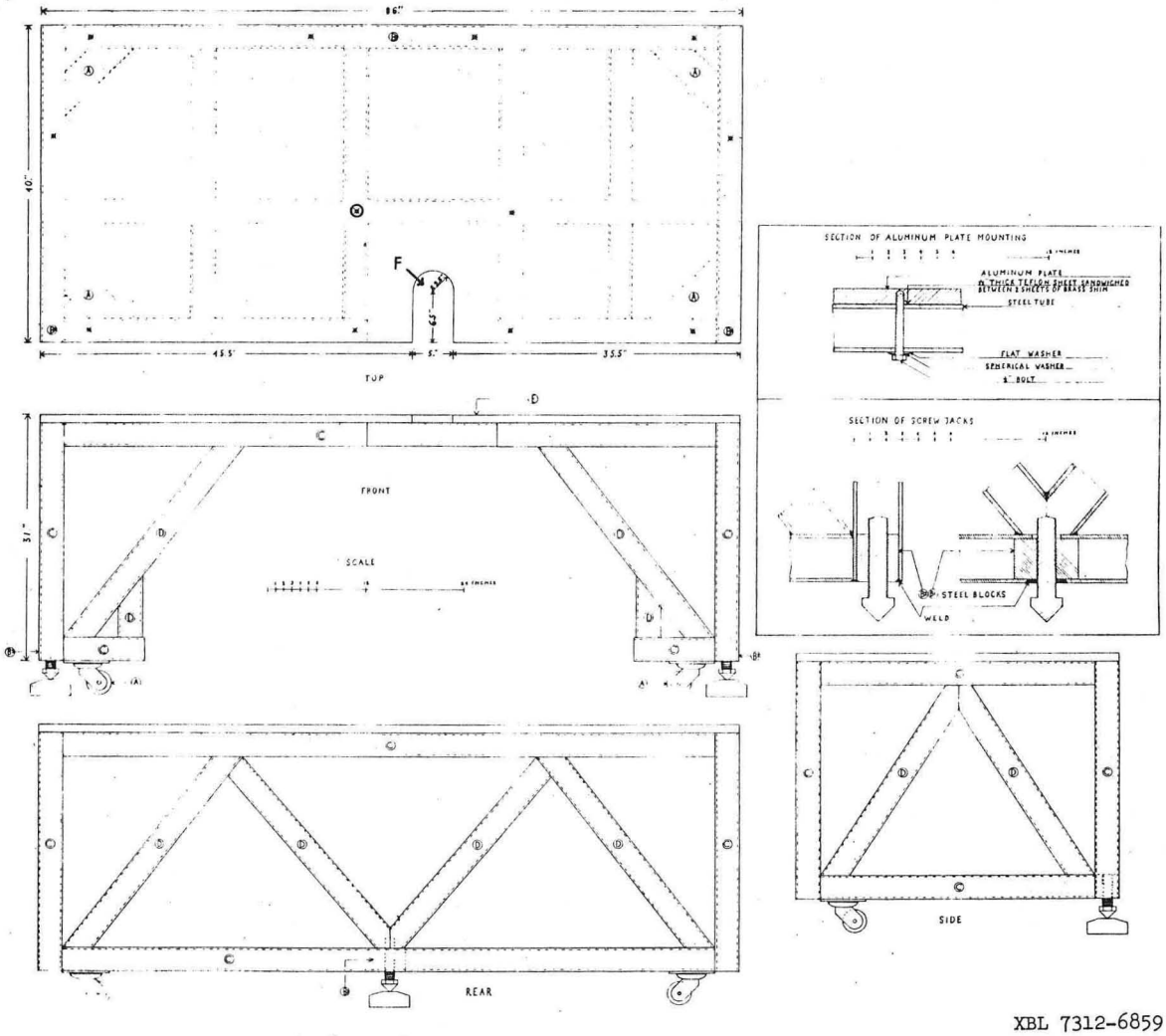

XBL 7312-6859 A

Fig. 9

LEGAL NOTICE

This report was prepared as an account of work sponsored by the United States Government. Neither the United States nor the United States Atomic Energy Commission, nor any of their employees, nor any of their contractors, subcontractors, or their employees, makes any warranty, express or implied, or assumes any legal liability or responsibility for the accuracy, completeness or usefulness of any information, apparatus, product or process disclosed, or represents that its use would not infringe privately owned rights.

TECHNICAL INFORMATION DIVISION
LAWRENCE BERKELEY LABORATORY
UNIVERSITY OF CALIFORNIA
BERKELEY, CALIFORNIA 94720