LBL-25325 c.2
Preprint

Lawrence Berkeley Laboratory
UNIVERSITY OF CALIFORNIA

LAWRENCE
1988
LIBRARY AND
DOCUMENTS SEC

Submitted to Physical Review Letters

First Observation of Dielectron Production at the Bevalac

DLS Collaboration

May 1988

TWO-WEEK LOAN COPY
This is a Library Circulating Copy
which may be borrowed for two weeks.

NUCLEAR SCIENCE DIVISION

LBL-25325 c.2

Prepared for the U.S. Department of Energy under Contract Number DE-AC03-76SF00098.

DISCLAIMER

This document was prepared as an account of work sponsored by the United States Government. While this document is believed to contain correct information, neither the United States Government nor any agency thereof, nor the Regents of the University of California, nor any of their employees, makes any warranty, express or implied, or assumes any legal responsibility for the accuracy, completeness, or usefulness of any information, apparatus, product, or process disclosed, or represents that its use would not infringe privately owned rights. Reference herein to any specific commercial product, process, or service by its trade name, trademark, manufacturer, or otherwise, does not necessarily constitute or imply its endorsement, recommendation, or favoring by the United States Government or any agency thereof, or the Regents of the University of California. The views and opinions of authors expressed herein do not necessarily state or reflect those of the United States Government or any agency thereof or the Regents of the University of California.

First Observation of Dielectron Production at the Bevalac

G. Roche,[(1),(a)] G. Claesson,[(1),(b)] D. Hendrie,[(1),(c)] G.F. Krebs,[(1)] E. Lallier,[(1),(d)] A. Letessier-Selvon,[(1)] H.S. Matis,[(1)] T. Mulera,[(1),(e)] C. Naudet,[(1)] L. Schroeder,[(1)] P.A. Seidl,[(1)] A. Yegneswaran,[(1)] Z.F. Wang,[(1),(f)] J. Bystricky,[(2),(g)] J. Carroll,[(2)] J. Gordon,[(2)] G. Igo,[(2)] S. Trentalange,[(2),(h)] T. Hallman,[(3)] L. Madansky,[(3)] J.F. Gilot,[(4),(i)] P. Kirk,[(4)] D. Miller,[(5)] and G. Landaud[(6)]

(The DLS Collaboration)

[(1)] *Lawrence Berkeley Laboratory, University of California, Berkeley, California 94720*

[(2)] *University of California at Los Angeles, Los Angeles, California 90024*

[(3)] *The Johns Hopkins University, Baltimore, Maryland 21218*

[(4)] *Louisiana State University, Baton Rouge, Louisiana 70803*

[(5)] *Northwestern University, Evanston, Illinois 60201*

[(6)] *Université de Clermont II - IN2P3, 63170 Aubière, France*

We have begun a program to measure dielectron production in p-nucleus and nucleus-nucleus collisions at the Bevalac. Results are presented for the reaction p+Be at 4.9 GeV. For the first time, direct lepton production is observed below 10 GeV incident energy. The cross sections are discussed and compared to previous data at higher energies. The observation of a structure at a mass of about 275 MeV suggests that pion annihilation may be the dominant production mechanism in this mass range.

PACS numbers: 13.75.Cs, 25.40.Ve, 25.70.Np, 13.85.Qk

Dilepton production has been extensively studied in hadron-nucleon and hadron-nucleus collisions at incident energies above 10 GeV.[1] At Bevalac energies (the few GeV range), the accessible phase space limits dilepton production to low masses ($M \lesssim 1$ GeV) and low transverse momenta ($p_t \lesssim 1$ GeV/c). In this domain, high energy experiments have observed a continuum yield (down to masses of 200-300 MeV) that cannot be explained by decays of meson resonances or charmed mesons, and Drell-Yan type calculations are not applicable. This large yield is still poorly understood, even though several models have been constructed with the aim of unifying the production of low p_t hadrons and low p_t low mass dileptons. The most successful class of models, the soft parton models[2], deals with the quarks and antiquarks produced during the collision which then annihilate and generate the lepton pairs.

Similarly, a large number of experiments at energies above 10 GeV have reported measurements of low p_t single direct electrons (those not associated with known decay schemes). Their yield is usually given as the e/π ratio at a given p_t. This ratio is found to be of the order 10^{-4}, increasing to 10^{-3} at the lowest values of p_t, about 0.1 GeV/c.[3] It has been suggested that these electrons originate from the large yield of low mass pairs. Two measurements at low incident energies[4], pp at 256 and 800 MeV, have found no direct electron signal, at the level of $e/\pi=10^{-6}$ for the 800 MeV data, which suggests a threshold between 1 and 10 GeV. The investigation of this possibility is one of the motivations of the present experiment.

In nucleus-nucleus collisions, dileptons are expected to be a good probe of the primary hot stage of the fireball. Gale and Kapusta[5] have made calculations applicable to the Bevalac energy domain and pointed out possible interesting effects relevant to pion dispersion in hot, dense nuclear matter. To some extent, the same dispersion relation concepts should actually apply to both p-nucleus and nucleus-nucleus instances.

The Dilepton Spectrometer (DLS) Collaboration has undertaken a program of measuring direct electron pair production in p-nucleus and nucleus-nucleus collisions at the

Lawrence Berkeley Laboratory Bevalac. Firstly, the program aims to establish the existence of direct electron pairs at Bevalac energies and help clarify their production mechanism(s). Secondly, it intends to use the direct electron pair signal as a probe to gather information on the initial, hot-dense stage of nucleus-nucleus collisions. We present herein the first evidence for direct pair production in p+Be collisions at 4.9 GeV.

The design specifications of the DLS were defined by the following considerations. The main background (false pairs) comes from the combinatorics of two electrons, each independently originating from the decay of a π^0, either directly from the Dalitz mechanism or by the conversion of their gamma ray products in the target or surrounding materials. The direct pairs (true pairs) are those produced in a single elementary process. Their yield is obtained by subtracting of the false pair background. The strength of the signal, expressed in term of the ratio e_{pair}/π, is expected to be less than or about 10^{-4}. The segmentation of the detectors will accommodate hadron multiplicities from central collisions of intermediate mass systems, up to about Ca+Ca at 2 GeV per nucleon.

The DLS experimental setup consists of two symmetric arms (Fig. 1), each including a large aperture dipole magnet, two scintillator hodoscopes, two segmented 1-atm gas Cerenkov counters and three drift chambers. The central ray of each arm is set at 40° to the beam direction. The target is segmented (5 segments) in order to reduce the production of false pairs from gamma ray conversion. Movable arrays of lead glass blocks located behind each arm are used for calibration of the Cerenkov counters. The electron efficiency per arm was measured to be 95 % while the probability of response to a pion was about 10^{-5}, which is adequate hadronic rejection power. In order to maximize acceptance of low mass pairs down to about 100 MeV, the magnetic field in the dipoles was set at 1.5 kG which results in a mass resolution of about 15 % (rms) in the ρ/ω mass region. The scintillator hodoscopes provide trigger flexibility, redundant timing information, energy loss measurement and first order tracking.

Fig. 2 shows the raw distributions in M, p_t and rapidity y (lab) of the opposite and like

sign pairs and illustrates the kinematical domain under investigation. The dilepton signal (true pairs) is obtained by subtracting the like sign from the opposite sign pairs. The total integrated beam flux was approximately equally distributed among the four combinations of magnetic field polarity in the dipoles to reduce the effect of charge asymmetry in the acceptance. The total target thickness was 4.0 g/cm^2 and the average beam intensity about 2×10^8 p/spill for a total acquisition time of 33 hrs. The spill duration was 1 s at a rate of 10 spills per minute. The measured sample contains 732 opposite sign and 201 like sign pairs, which yields 531 $\pm$ 31 true pairs. The existence of a dielectron signal is clearly established.

The absolute cross sections were obtained by applying the DLS acceptance, efficiency corrections and beam normalization factors to the raw data. The DLS simulation code, which incorporates the GEANT3 library[6] was used to compute the acceptance in cells of dM, dp_t and dy. Fig. 3 shows the cross section per nucleon (assuming an $A^{2/3}$ dependence) integrated over p_t and y as a function of M. The error bars only reflect the experimental statistical uncertainty on the data. Systematical uncertainties on the normalization are estimated to be within about +50/-20 %. The spectrum exhibits the following three features: 1) a decreasing continuum above 300 MeV with an enhancement in the ρ/ω region; 2) a peak or cut-off at about 275 MeV; and 3) the start of a steep increase of the cross section below 150 MeV.

The first feature (continuum and ρ/ω enhancement) is expected from higher energy results[1]. The ρ/ω contribution was unfolded with a Gaussian distribution (rms about 15 % of the central value) to obtain a cross section for $pp \longrightarrow \rho/\omega + X \longrightarrow e^+e^- + X$ of 10 $\pm$ 5 nb in agreement with published data[7]. The continuum above 300 MeV compares to the low mass direct pairs observed at higher energies. The solid curve in Fig. 3 is a fit to the KEK data of Mikamo et al.[8], p+Be at 12 GeV, using a phenomenological functional form given by Kinoshita et al.[9]. The shapes are in good agreement. For further comparison, we

have used the following more precise expression derived from Kinoshita et al.,

$$\frac{d\sigma}{dM\, dp_t^2\, dy} = C\, M^{-\beta}\, (1 - x_0)^{\alpha}\, \frac{\lambda^2\, exp(-\lambda\, E_t)}{2\,(\lambda\, M + 1)} \qquad (.1)$$

where C, α, β and λ are constants taken from ref. 8 (C = 40 $nb\,GeV^3$, λ = 6 GeV^{-1}, α = 3.5 and β = 4), x_0 is the radial scaling variable E/E_{max} and E_t the transverse kinetic energy. This expression is also shown in Fig. 3 and appears to be in reasonable agreement with our data above 300 MeV and below the resonance region.

We have extensively studied the cut-off or peak around 275 MeV and performed several tests, using the simulation code, to check whether it is an acceptance effect. The Cerenkov counters optical angular apertures were varied from half the actual values to 90°. There was no significant change in both magnitude and shape of the mass spectrum when the angles were increased to 90°. The acceptance uniformly decreased but there was no effect on the shape when the angles were decreased to half the actual values. The momentum cut-off in the simulation and analysis programs is 50 MeV/c. Increasing this value to 100 MeV/c removed the first mass bin (50-100 MeV), reduced the yield in the following mass bins (100-300 MeV), but the structure remained. Finally, the analysis code and the acceptance calculation were applied to the false pairs. The corresponding cross section, with a smooth behaviour and no structure around 300 MeV, was found to agree with a simulation from uncorrelated π^0 Dalitz decays, the dominant contribution to the false pair background. At this stage of the study, we believe that the structure in the true pair mass spectrum at about 275 MeV is significant. To our knowledge, this structure has never been observed. The KEK data cuts off at 300 MeV and other published data for masses down to 200 MeV suffer from rather poor statistics[10,11].

We have made estimates of possible contributions to the dielectron signal from the Dalitz decays of π^0, η, ω and K^0 mesons and from the decay of the $\Delta(1232)$ resonance into a nucleon and an electron pair. All of these contributions are lower than the measured cross section by two orders of magnitude, except for the contribution of the π^0 Dalitz decay which is plotted in Fig. 3. The rise of the cross section below 150 MeV is partly due to Dalitz

pairs emitted with a wide opening angle, and there might be some additional hadronic bremsstrahlung contribution. However, for this very low mass range, the p_t acceptance of the DLS in a 2-arm trigger mode is limited. The corresponding data points are given for a qualitative illustration of this part of the spectrum.

Fig. 4 shows our measured dielectron cross section per nucleon $d\sigma/dp_t^2$ integrated over M and y as a function of p_t^2. Also plotted on the figure are the SLAC π^-p data points at 16 GeV from Blockus et al.[10] and a fit to the BNL data of Adams et al.[11] for π^-p at 17 GeV. The latter fit is given by the authors in arbitrary units; we have qualitatively normalized it to the SLAC data points. Our cross section is integrated over M above 0.2 GeV for the sake of comparison to the SLAC and BNL data and because of the limited p_t acceptance at very low masses. There is rough agreement in shape with the higher energy data. We have also plotted on the figure equation (1) integrated over M and y. Because of the power law mass dependence of the phenomenological model and the experimental turn over, we have integrated equation (1) above M = 275 MeV. The experimental slope is slightly smaller than the one from the model. In fact, the discrepancy is mostly given by the contribution of the resonance region as we noted, by making slices in the data, that masses in the ρ/ω region are emitted at higher p_t.

In conclusion, we have established the existence of a direct electron pair signal in p+Be collisions at 4.9 GeV. The cross sections are similar to those measured at higher energies except for the structure in the mass spectrum at about 275 MeV. It is interesting to note that the observed break is at about two times the pion mass, which most probably indicates that these dileptons originate from pion annihilation.

This work was supported by the Director, Office of Energy Research, Division of Nuclear Physics of the Office of High Energy and Nuclear Physics of the U.S. Department of Energy under Contracts DE-AC03-76SF00098, DE-FG03-88ER40424, DE-FG02-88ER40413 and DE-FG05-88ER40445. We would like to thank the Bevalac engineering and operations staff for their excellent support throughout the running of the experiment.

[a]On leave from the Université de Clermont II, France.

[b]Present address: University of Lund, Sweden.

[c]Present address: U.S. Department of Energy, Washington, DC.

[d]Present address: Thomson-LCR, Orsay, France.

[e]Present address: Perkin Elmer Co., Hayward, CA.

[f]Present address: Louisiana State University, Baton Rouge, LA.

[g]Present address: Institut National de Physique Nucleaire et de Physique des Particules, France.

[h]Present address: Rutgers University, New Brunswick, NJ.

[i]Present address: Eidgenossische Technische Hochschule, Zurich, Switzerland.

[1]G. Roche, in *Proceedings of the 2nd Conference on the Intersections between Particle and Nuclear Physics, Lake Louise, 1986*, edited by D.F. Geesaman (American Institute of Physics, New-York, 1986), and references therein.

[2]J.D. Bjorken and H. Weisberg, Phys. Rev. D**13**, 1405 (1976); V. Cerny et al., Phys. Rev. D**24**, 652 (1981).

[3]T. Akesson et al., Phys. Lett. B**152**, 411 (1985).

[4]A. Browman et al., Phys. Rev. Lett. **37**, 246 (1976).

[5]C. Gale and J. Kapusta, Phys. Rev. C**35**, 2107 (1987).

[6]R. Brun et al., CERN DD/EE/84-1 (1987).

[7]G. Alexander et al., Phys. Rev. **154**, 1284 (1967).

[8]S. Mikamo et al., Phys. Lett. B**106**, 428 (1981)

[9]K. Kinoshita, H. Satz, and D. Schildknecht, Phys. Rev. D**17**, 1834 (1978).

[10]D. Blockus et al., Nuc. Phys. B**201**, 205 (1982).

[11]M.R. Adams et al., Phys. Rev. D**27**, 1977 (1983).

Figure captions

Fig. 1. The DLS experimental setup.

Fig. 2. Raw e^+e^- distributions in (a) mass, (b) p_t and (c) y, for the reaction p+Be at 4.9 GeV. The shaded regions show the false pair background (like sign pairs).

Fig. 3. The mass cross section per nucleon for the reaction p+Be (A_t is the target mass number). Data points: our data at 4.9 GeV. Solid line: fit to the KEK data at 12 GeV. Dashed line: phenomenological model calculation at 4.9 GeV, equation (1). Dot-dashed line: estimate of the π^0 Dalitz decay contribution at 4.9 GeV.

Fig. 4. The cross section per nucleon $d\sigma/dp_t^2$ for the reaction p+Be at 4.9 GeV (data points, closed squares). The SLAC data points, π^-p at 16 GeV (open circles) and the BNL fit, π^-p at 17 GeV (solid line) are plotted for comparison. The dashed line is the phenomenological expression (1) at 4.9 GeV.

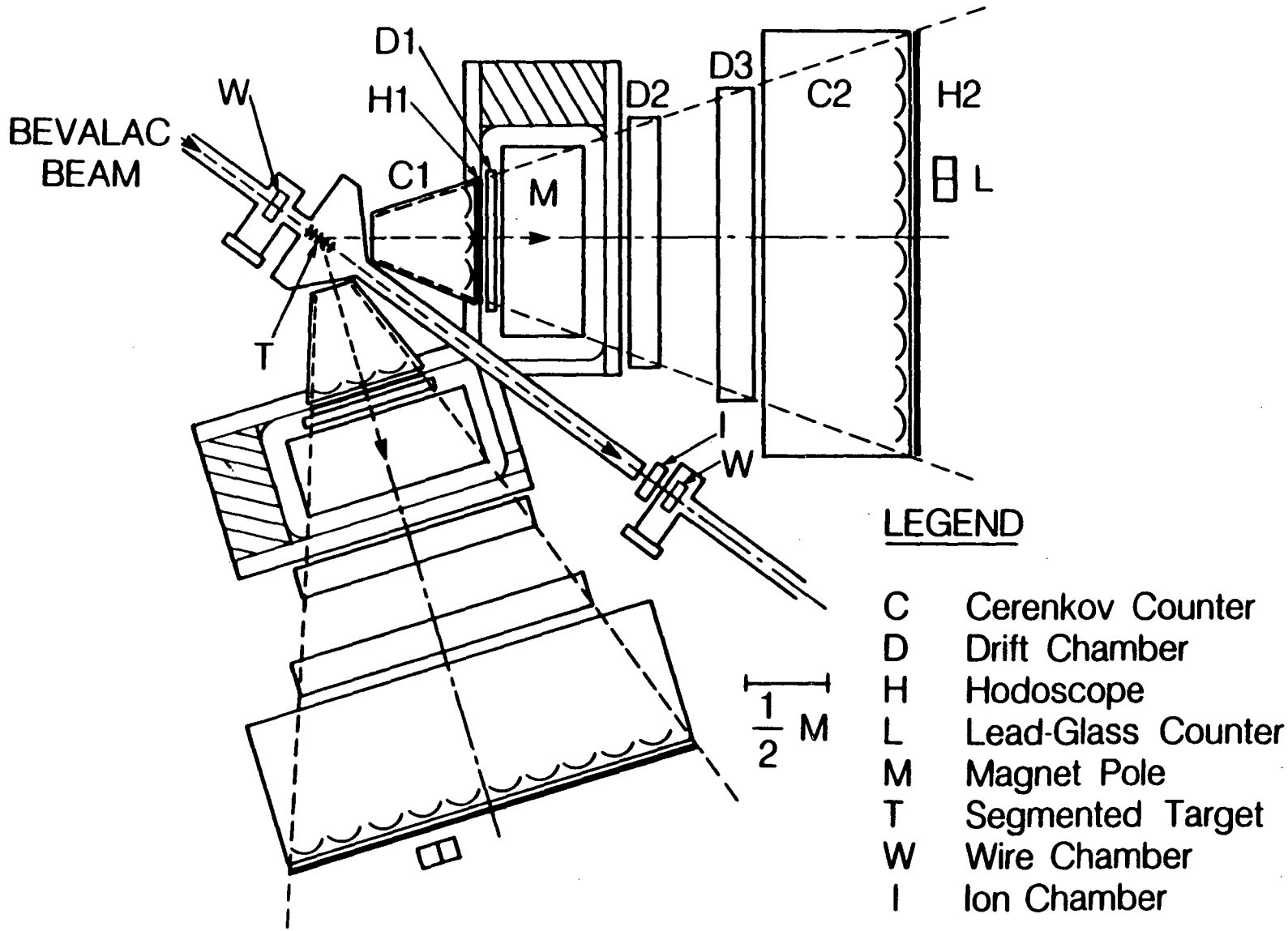

XBL 8512-9590 A

Fig. 1

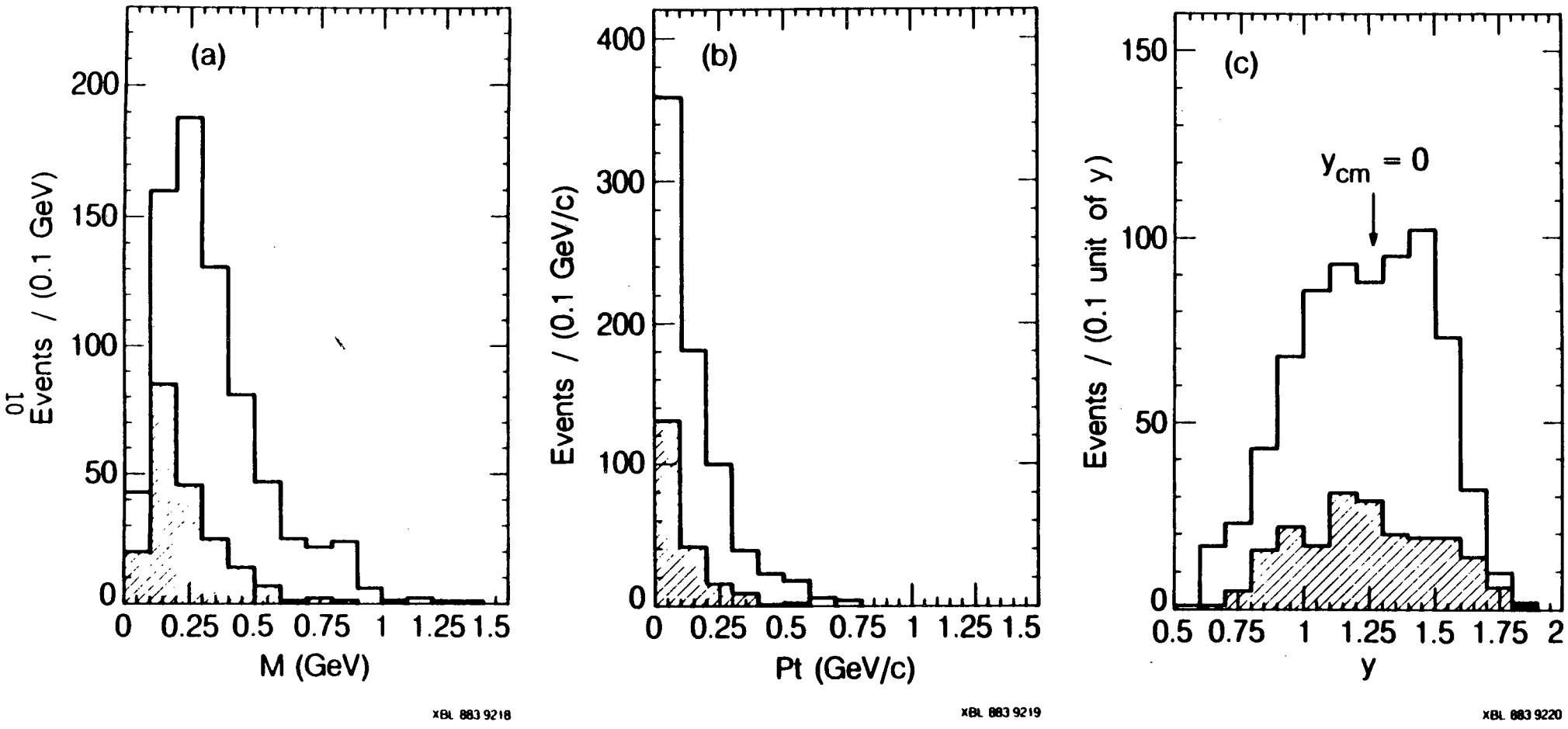
(a)
Events / (0.1 GeV)
M (GeV)
XBL 883 9218
(b)
Events / (0.1 GeV/c)
Pt (GeV/c)
XBL 883 9219
(c)
Events / (0.1 unit of y)
$y_{cm} = 0$
y
XBL 883 9220

Fig. 2

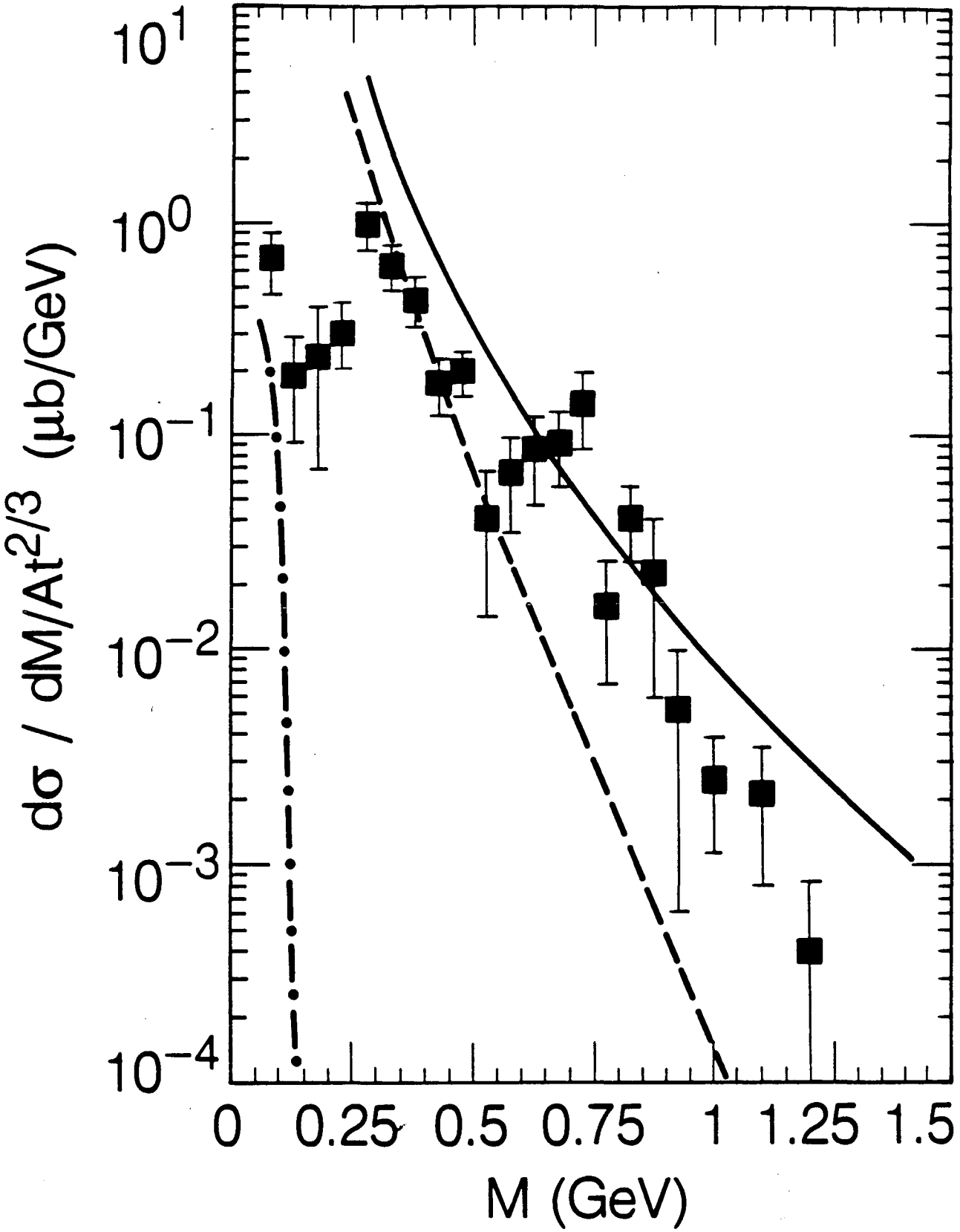

XBL 883-9221

Fig. 3

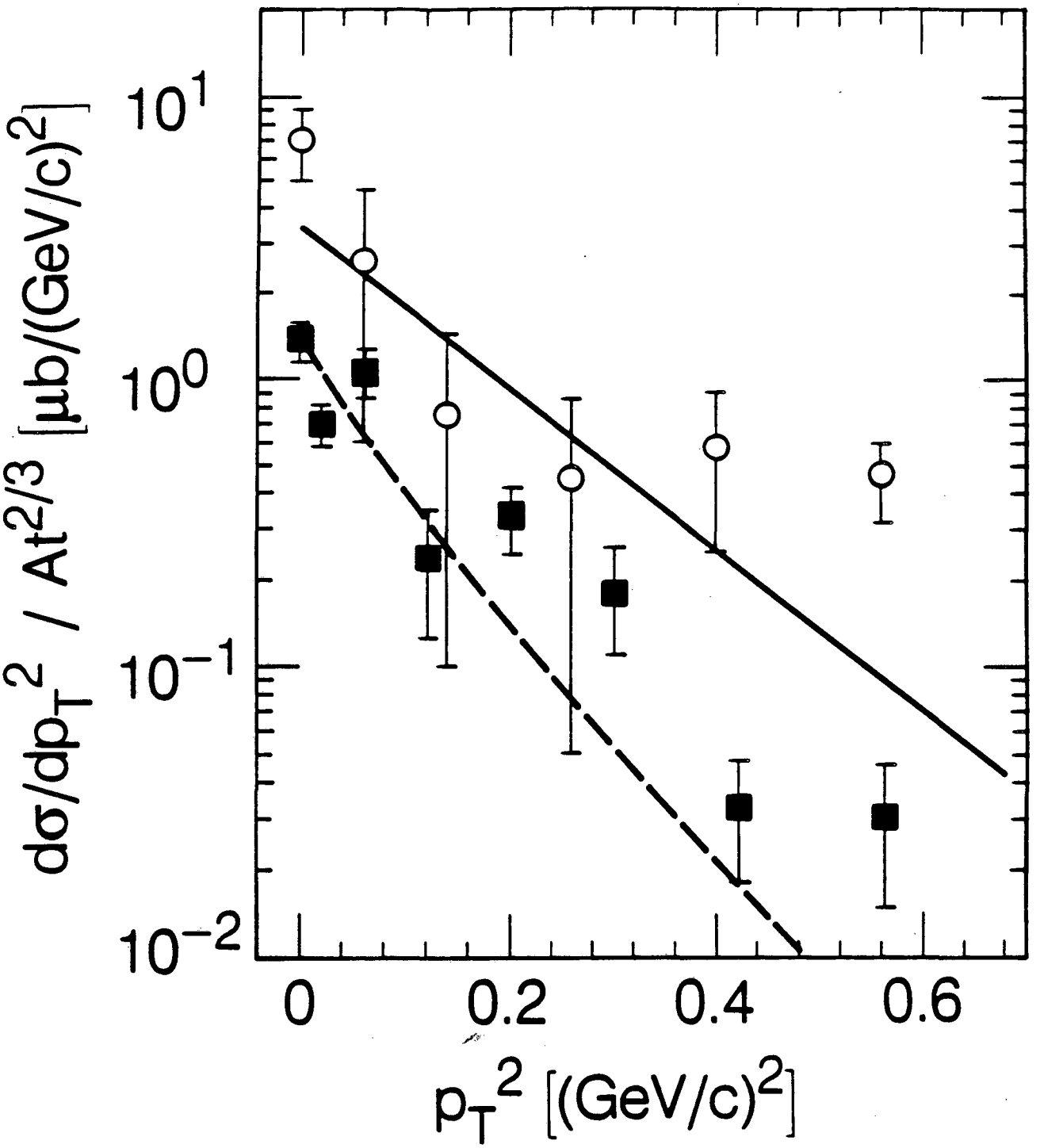

XBL 883-9222

Fig. 4

LAWRENCE BERKELEY LABORATORY
TECHNICAL INFORMATION DEPARTMENT
UNIVERSITY OF CALIFORNIA
BERKELEY, CALIFORNIA 94720