0 0 0 0 4 1 3 0 7 8 7

LBL-2534
c.1

DIFFUSION OF LANTHANUM IN MOLTEN URANIUM

R. Yang and D. R. Olander

RECEIVED
LAWRENCE
RADIATION LABORATORY

MAR 20 1974

LIBRARY AND
DOCUMENTS SECTION

January 1974

Prepared for the U.S. Atomic Energy Commission
under Contract W-7405-ENG-48

For Reference

Not to be taken from this room

LAWRENCE BERKELEY LABORATORY
UNIVERSITY OF CALIFORNIA
BERKELEY

LBL-2534
c.1

DISCLAIMER

This document was prepared as an account of work sponsored by the United States Government. While this document is believed to contain correct information, neither the United States Government nor any agency thereof, nor the Regents of the University of California, nor any of their employees, makes any warranty, express or implied, or assumes any legal responsibility for the accuracy, completeness, or usefulness of any information, apparatus, product, or process disclosed, or represents that its use would not infringe privately owned rights. Reference herein to any specific commercial product, process, or service by its trade name, trademark, manufacturer, or otherwise, does not necessarily constitute or imply its endorsement, recommendation, or favoring by the United States Government or any agency thereof, or the Regents of the University of California. The views and opinions of authors expressed herein do not necessarily state or reflect those of the United States Government or any agency thereof or the Regents of the University of California.

0 0 0 0 4 1 0 0 7 8 8

LBL-2534

DIFFUSION OF LANTHANUM IN MOLTEN URANIUM*

R. Yang and D. R. Olander

Inorganic Materials Research Division, Lawrence Berkeley Laboratory
and Department of Nuclear Engineering, University of California,
Berkeley, California 94720

ABSTRACT

This report completes a series of attempts to measure the diffusion coefficient of lanthanum in liquid uranium by the capillary method using the two molten, partially miscible metals.

In order to obtain the lanthanum penetration profile in the uranium phase while diffusion was in progress, the diffusion zone was scanned by a scintillation γ-ray detector while the system was in the furnace. Due to the low solubility of lanthanum in uranium, accurate diffusion profiles could only be obtained by measuring the activity far from the interface. The large statistical errors in the count rates at distances far from the interface renders such data unreliable. This is believed to be the principal reason for the inaccurate diffusivities obtained in previous experiments.

In order to obtain high count rates at positions far from the interface, a slagging process was employed. A piece of alumina was inserted in the bottom of the crucible to act as a sink for the diffused lanthanum. The La-U interface was separated from the alumina plug by about 5 mm of molten uranium. The diffusion coefficient could be determined by measuring the cumulative count rate at the uranium-alumina interface as a function of time. A value of $D = (1.5 \pm 0.2) \times 10^{-5}$ cm^2/sec at 1250°C was determined in this manner. This value is within the range of diffusivities expected in liquid metal systems, and suggests that there is nothing abnormal in the uranium-lanthanum system.

*Work done under the auspices of the U. S. Atomic Energy Commission.

1. INTRODUCTION

The knowledge of the diffusion coefficient of lanthanum in molten uranium is important in the reprocessing of spent uranium fuel. Le Borgne (1) used the capillary method and found the diffusion coefficient to be as low as 4.5×10^{-7} cm^2/sec. Upon sectioning a specimen, Le Borgne found large bubbles in the uranium ingot near the lanthanum-uranium interface. He believed that these bubbles may have caused the very low diffusion coefficient which was measured.

Hovingh (2) repeated Le Borgne's experiment trying to avoid bubbles. He succeeded in eliminating the bubbles by multiple melting of each uranium ingot in beryllia crucibles, with cleaning of the ingot between each melting. The diffusion coefficient he obtained was also $\sim 10^{-7}$ cm^2/sec. Both of these experimental diffusivities were about two orders of magnitude smaller than theoretically predicted values (3,4,5), and warranted further investigation in order to firmly establish whether the La-U system was abnormal.

2. IN-SITU ACTIVITY MEASUREMENT

Some modifications of the experimental apparatus described in references 1 and 2 were made. The major differences between Hovingh's system and the present setup are the micrometer linear feedthrough, the tantalum block shadow shield in the furnace and the collimating system (Figure 1). These features were added to permit scanning of the uranium phase for La-140 activity while diffusion was in progress. The entire crucible could be raised or lowered while at temperature to permit thin slices of the molten uranium phase to be viewed by

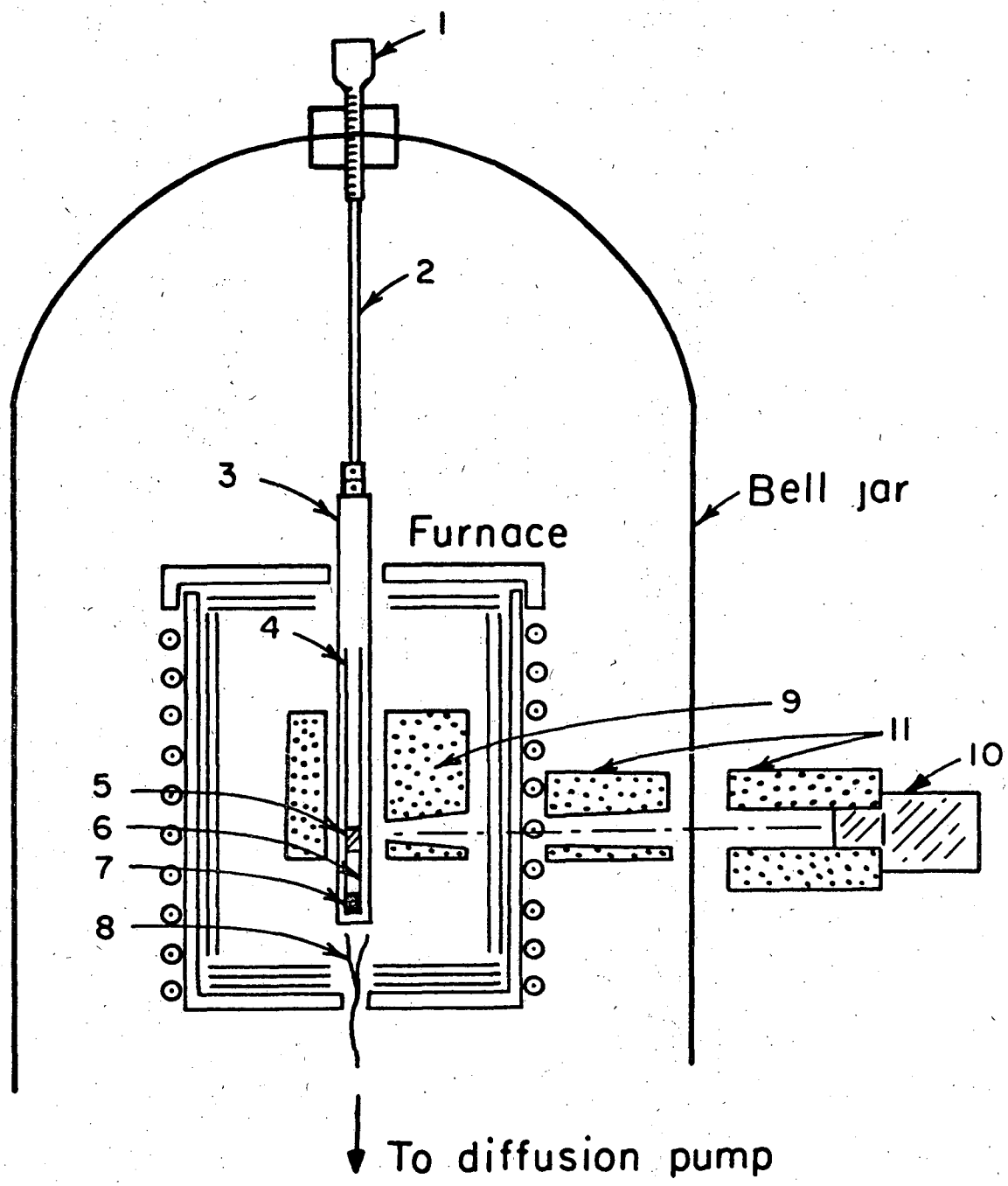

1. Micrometer Liner Feedthrough
2. Support Rod
3. Molybdenum Holder
4. Beryllia Crucible
5. Molten Lanthanum
6. Molten Uranium
7. Alumina Plug
8. Thermal Couple
9. Tantalum Shadow Shield
10. NaI Detector
11. Lead Shield

XBL741-2009

FIGURE 1 Experimental Apparatus Showing the Liner Feedthrough and the Collimating System

the NaI detector through a well defined window. The top view of the collimating system is shown in more detail in Figure 2. The cone-shape slots in the tantalum block and lead brick maximizes the solid angle subtended by the NaI detector. The nominal window width (i.e., the height of the slot) is 1.5 mm.

The modified crucible used in the present experiment is shown in Figure 3. A tantalum liner was added to the beryllia crucible to provide a surface which would be wetted by liquid uranium, so that lanthanum would not slip between beryllia crucible and molten uranium. (This effect had been suspected in Hovingh's experiment (2)).

An experiment was performed in order to determine the lanthanum activity profile close to the interface at various times during diffusion. From the data obtained, it is believed that:

(i) The lanthanum-uranium interface is very nearly hemispherical (Appendix).

(ii) The lanthanum-uranium interface moved downward during diffusion experiment. Probably due to seepage of uranium upwards between the BeO crucible and the Ta liner.

Because of these two effects, accurate lanthanum penetration data can only be obtained by measuring the activity at least two window widths from the interface. Unfortunately, due to the low saturation concentration of lanthanum in uranium (6), the count rate at these locations approaches the background count rate. The large statistical error makes the data unreliable.

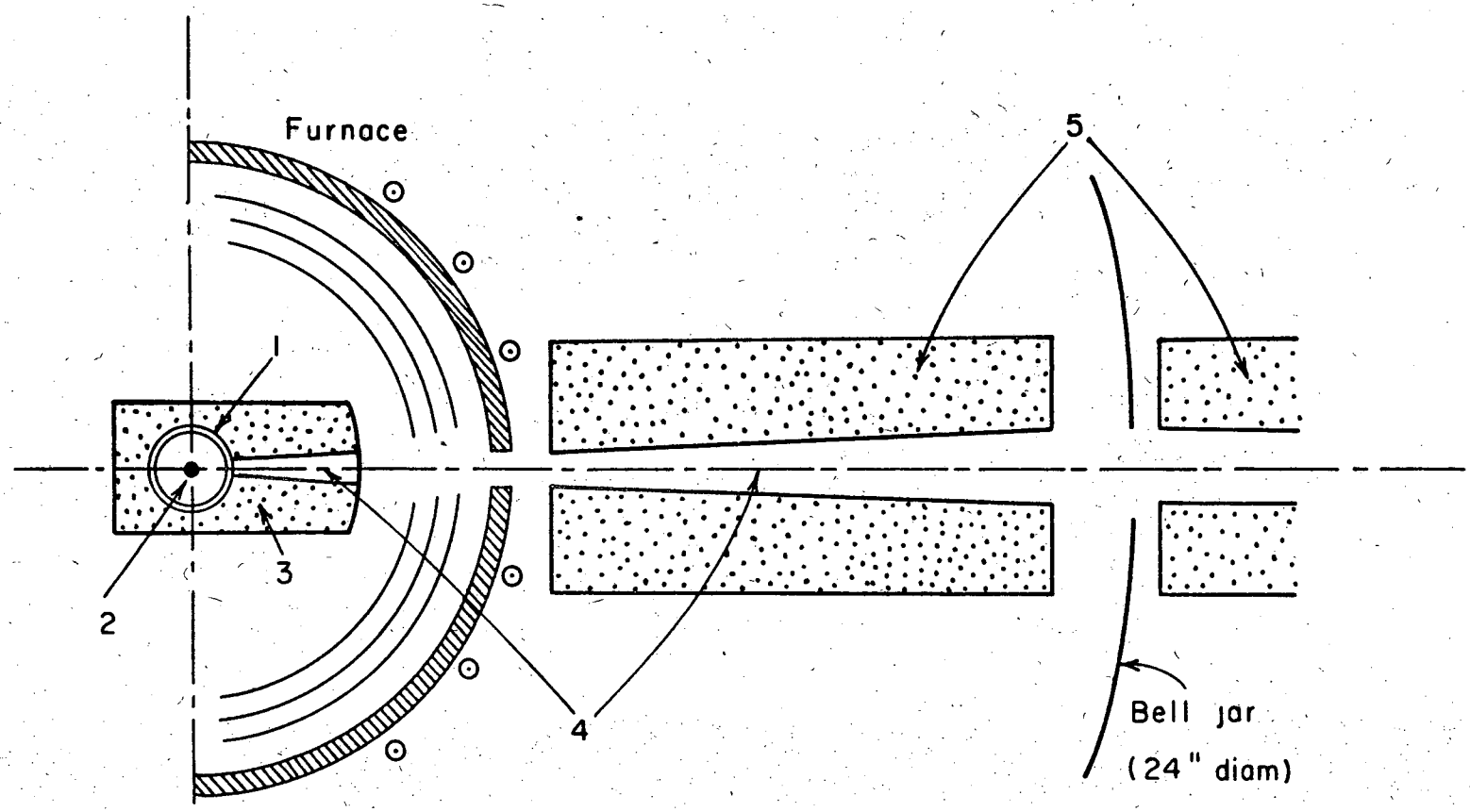

1. Molybdenum Holder
2. Uranium (Lanthanum)
3. Tantalum Shadow Shield
4. Cone Shape Slot
5. Lead Brick Shield

XBL741-2010

FIGURE 2 Top View of Collimating System

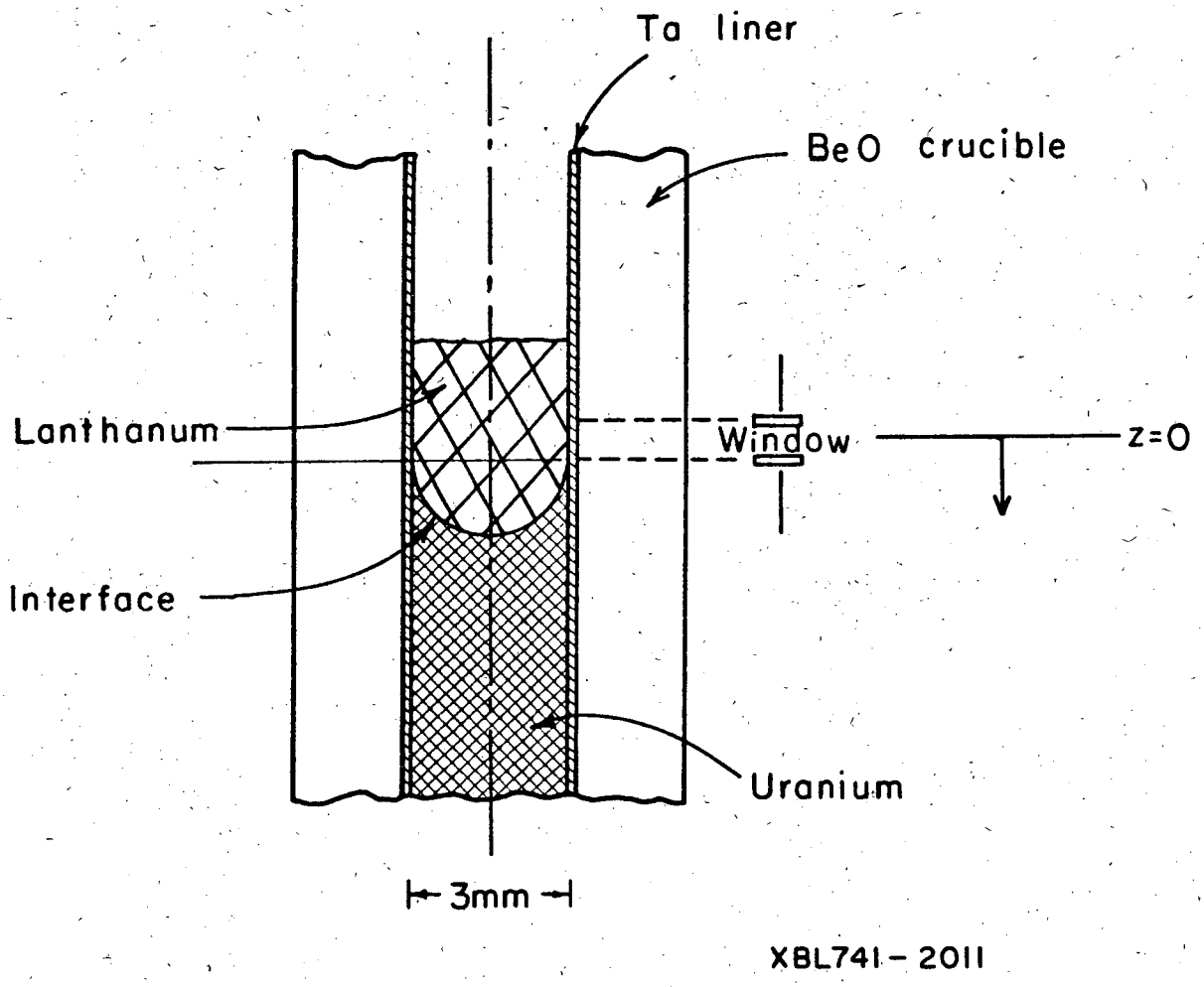

FIGURE 3 Beryllia Crucible with Tantalum Liner

3. ALUMINA SLAGGING EXPERIMENT

In order to avoid the uncertainties of trying to measure lanthanum activities close to the interface and at the same time to obtain higher count rates at positions far from the interface, a slagging process was used (7). A piece of alumina was inserted in the bottom of the crucible as a sink to getter the lanthanum which had diffused from the interface through the uranium (see Figure 4). The function of the alumina can be seen from the following thermochemical analysis.

Consider the reactions:

$$2La + Al_2O_3 \rightarrow La_2O_3 + 2Al \quad (A) \quad \Delta G^\circ_{1250} = -\ 23.1 \text{ kcal}$$

$$\frac{3}{2}U + Al_2O_3 \rightarrow \frac{3}{2}UO_2 + 2Al \quad (B) \quad \Delta G^\circ_{1250} = +\ 9.3 \text{ kcal}$$

The free energy of reaction for reaction (A) is - 23.1 kcal at 1250°C and is + 9.3 kcal for reaction (B) at 1250°C. From a thermodynamic point of view, a reaction is extensive only when the free energy change of the reaction is negative. Consequently only lanthanum should react with alumina. This makes alumina a good material to remove lanthanum from metallic uranium. The latter should not react with the alumina.

A premelted uranium ingot was placed on top of alumina and melted at 1250°C for ∿ 3 hours. After cooling, the irradiated lanthanum was put on top of the uranium ingot and the furnace temperature was raised up to 1250°C. The crucible was moved vertically by means of the linear feedthrough to give activity profile during the experiment. A typical diffusion profile obtained midway in the

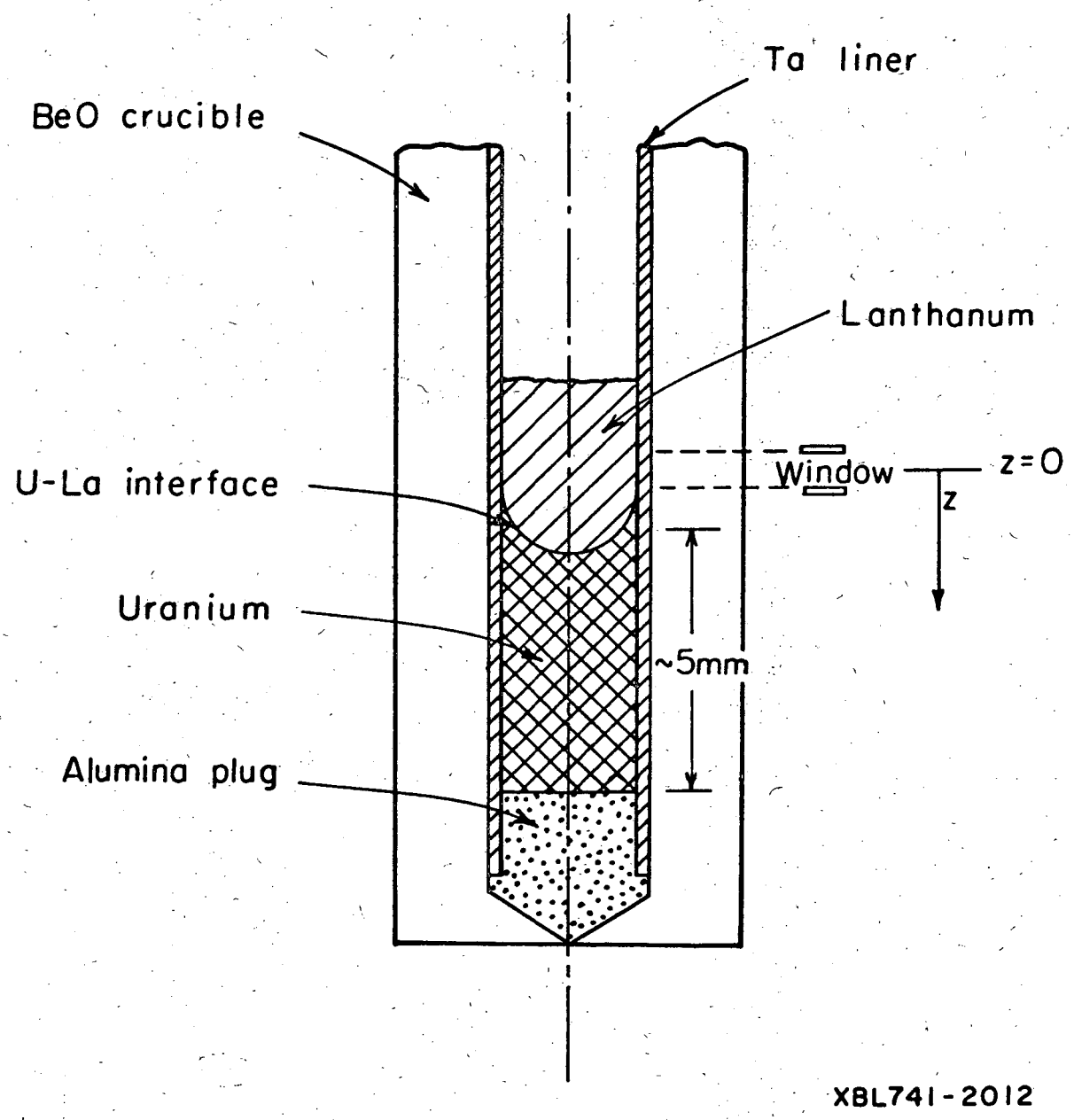

FIGURE 4 Crucible with Alumina Plug

experiment is shown in Figure 5. The locations of the La, U, and Al_2O_3 phases is shown at the top of the figure. The plateau of the large peak represents the count rate when the detector was facing pure lanthanum. The small peak on the right shows the count rate due to lanthanum gettered by the alumina. The area under the small peak is proportional to the number of lanthanum atoms in the alumina. The window width of about 2.5 mm shown in Figure 5 was calculated from plateau fall-off (see reference 2). The actual window width is $\sim$ 1.5 mm. The scattered radiation and the direct γ-ray fluctuation through the lead and tantalum shielding make the effective window width larger than the true window width.

In the alumina slagging experiment, the diffusion coefficient determination is based upon a cumulative count rate of the U-Al_2O_3 interface rather than the change with time of the concentration profile near the La-U interface. The total cumulative count rate in the alumina sink is much larger than that in the uranium (because of the low solubility of lanthanum in uranium). Another advantage of this experiment is that the counting close to the high activity pure lanthanum,which incurs the error discussed above, is avoided.

4. DIFFUSION ANALYSIS OF THE ALUMINA SLAGGING METHOD

The conservation statement that describes diffusion in a long capillary is

$$\frac{\partial C}{\partial t} = D \frac{\partial^2 C}{\partial x^2} \qquad (1)$$

C = concentration of lanthanum in molten uranium, $\frac{\text{atoms}}{\text{cm}^3}$

D = diffusion coefficient, $\frac{\text{cm}^2}{\text{sec}}$.

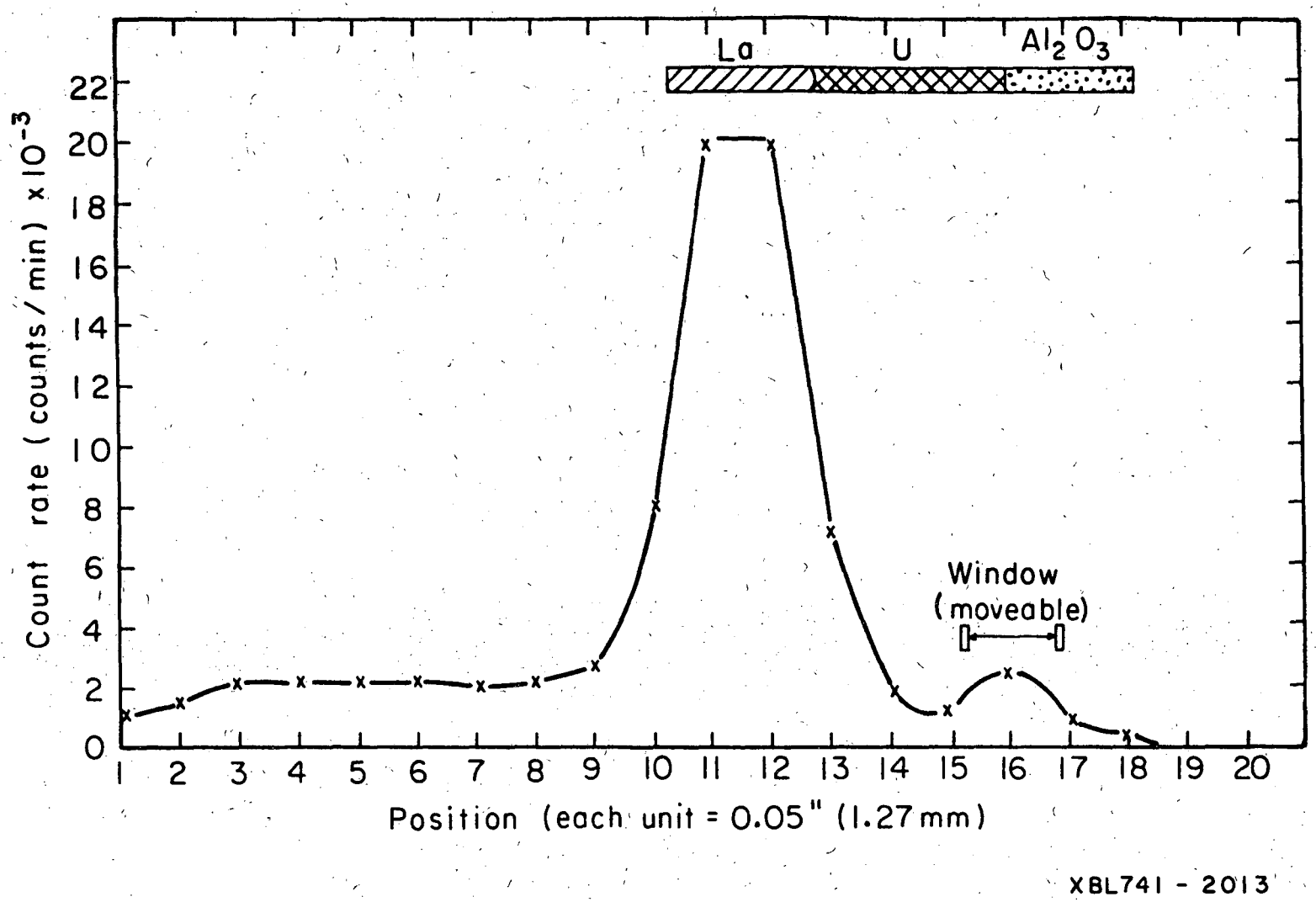

FIGURE 5 A Typical Diffusion Profile of the Alumina Slagging Experiment

Equation (1) assumes that the system is one-dimensional. Interface curvature effects are neglected, since the diffusion path through the uranium is large compared to the curvature of the interface.

For the capillary tube, the concentration of lanthanum in uranium is initially zero.

Initial Condition: $C(X,0) = 0$ For $X \geq 0$

At the uranium-lanthanum interface, the concentration is the saturation concentration of lanthanum in uranium (2).

Boundary Condition 1: $C(0,t) = C_o = 0.026\ C^*$

C^* is the pure lanthanum concentration $\frac{\text{atoms}}{\text{cm}^3}$

C_o is the saturation concentration $\frac{\text{atoms}}{\text{cm}^3}$

Assuming the alumina is a perfect sink for lanthanum, the concentration of lanthanum in uranium at the uranium-alumina interface is zero (see reaction (A)).

Boundary Condition 2: $C(L,t) = 0$

L is the length of uranium.

The solution to equation (1), subject to the above initial and boundary conditions, is

$$C(X,t) = 0.026\ C^* - 0.026\ C^* \frac{X}{L}$$

$$- \frac{2}{\pi} \sum_{n=1}^{\infty} \frac{0.026\ C^*}{n} \sin\left(\frac{n\pi X}{L}\right) e^{-Dn^2\pi^2 t/L^2} \qquad (2)$$

The lanthanum flux at the alumina face is

$$J(L,t) = -D\left(\frac{\partial C}{\partial X}\right)_{X=L}$$

$$= \frac{0.026C^*D}{L}\left[1 + 2\sum_{n=1}^{\infty}(-1)^n e^{-Dn^2\pi^2 t/L^2}\right] \qquad (3)$$

Let $A'' = \int_0^t J(L,t')dt'$ (4)

be the total number of lanthanum atoms which have passed the plane at X = L per unit area up to time t, and let $a_{Al_2O_3}$ be the total count rate, under the Al_2O_3 peak (see Figure 5).

a^* = the count rate when the detector is facing pure lanthanum (the plateau in Figure 5)

W = effective window width

R = the inner radius of the tantalum tube.

The ratio of the total count rate of lanthanum in alumina and in pure lanthanum is

$$\frac{a_{Al_2O_3}}{a^*} = \frac{\text{total number of La atoms in } Al_2O_3}{\text{total number of La atoms in volume } \pi R^2 W}$$

$$= \frac{A''\ \pi R^2}{C^*\ \pi R^2 \cdot W} = \frac{A''}{C^* W}$$

Integrating Eq (3) according to Eq (4) and using the above formula yields

$$\frac{a_{Al_2O_3}}{a^*} = \frac{0.026D}{LW}\left[t - 2\frac{L^2}{D\pi^2}\sum_{n=1}^{\infty}\frac{(-1)^n}{n^2}\, e^{-Dn^2\pi^2 t/L^2} - \frac{L^2}{6D}\right] \quad (5)$$

Figure 6 shows a plot of $\frac{a_{Al_2O_3}}{a^*}$ according to Eq (5) for the following values of the parameters

$D = 10^{-5}$ cm^2/sec

$L = 0.72$ cm

$t = 30$ hours

The results of a simple steady state analysis (i.e., neglecting the initial transient in the diffusion problem which retains only the first term in the bracket of Eq (5)) is also shown in Figure 6. The exact solution is seen to be offset from the steady state solution by an induction period of $\sim$ 3 hours.

5. RESULTS

Eq (5) was applied to the data from a single experiment. The data were obtained in the form of activity profile similar to that of Figure 5 for various times. The integrated count rate under the alumina peak (corrected for radioactive decay of lanthanum-140) is plotted in Figure 7.

Since a single straight line could NOT be drawn through these points (as expected from Figure 6), the diffusion coefficient D was computed from Eq (5) each time. The coefficient so computed are shown next to the points in Figure 7. By neglecting the first point, the diffusion coefficient at 1250°C is

$$D = (1.5 \pm 0.2) \times 10^{-5} \text{ cm}^2/\text{sec}$$

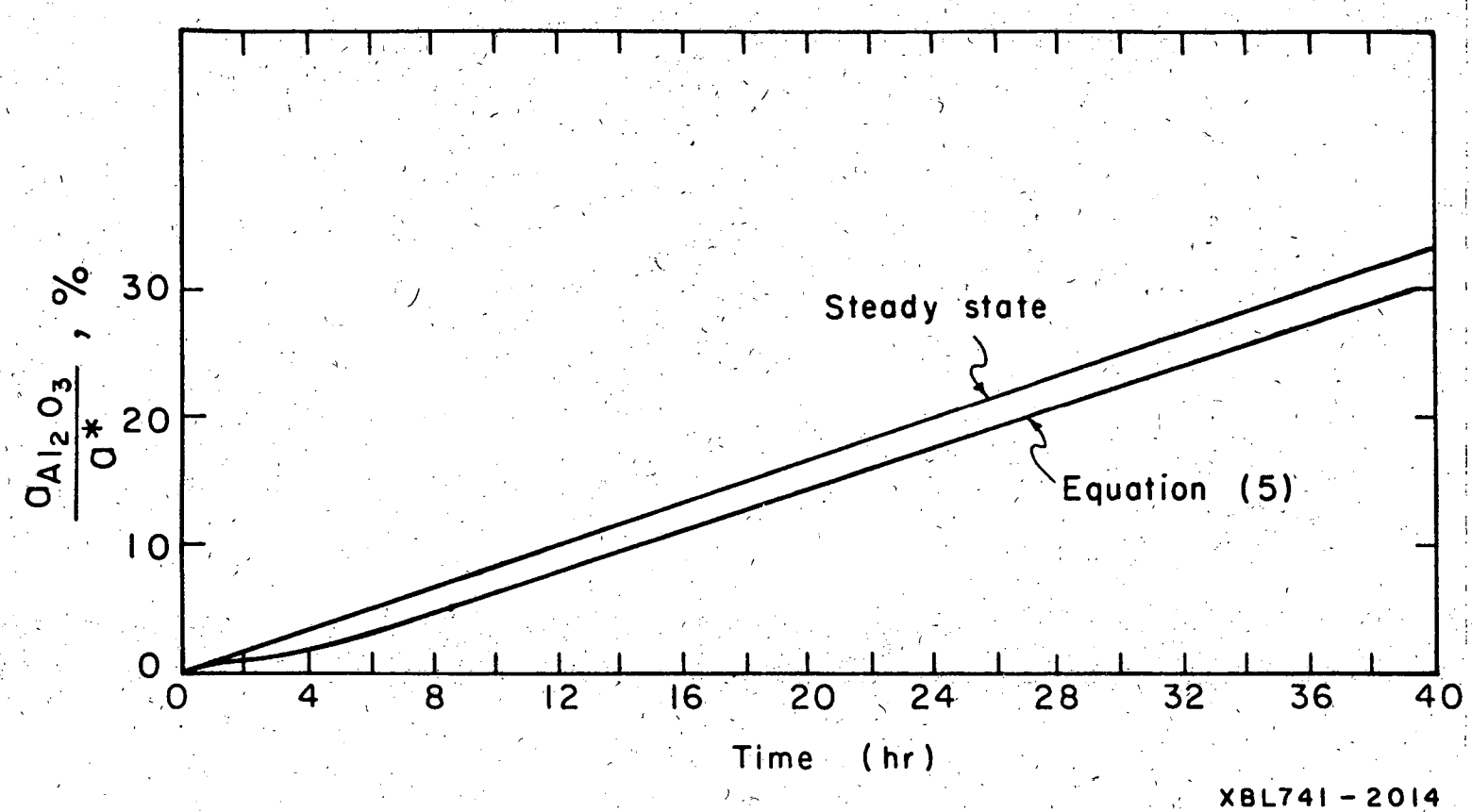

FIGURE 6 Plot of $\frac{a_{Al_2O_3}}{a^*}$ vs Diffusion Time for Steady State and Unsteady State Conditions

0 0 0 0 4 1 0 0 7 9 1

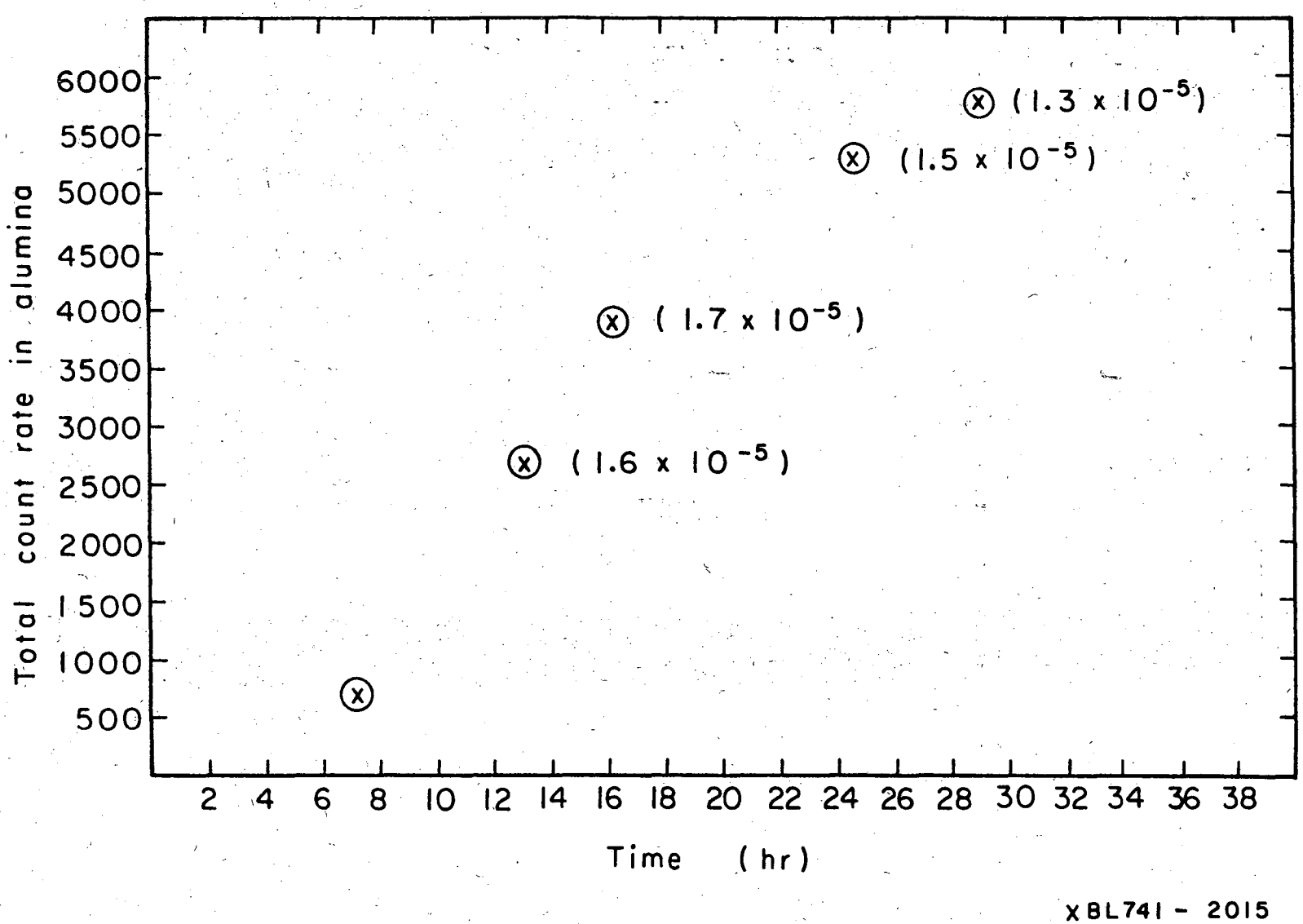

FIGURE 7 The Total Count Rate in the Alumina vs Diffusion Time

6. DISCUSSION

The modified arrangement utilizing a plug of alumina at the bottom of the crucible eliminates the large statistical counting error inherent in Le Borgne and Hovingh's technique. In addition, this modification has the advantage that the exact shape and position of the meniscus is not so important as in the experiments which attempt to measure the distribution of lanthanum in the uranium close to the U-La interface. Because the position of the solid alumina is fixed and the length of the uranium is known, the average diffusion distance is rather accurately specified. While in previous experiments (those without alumina as sink) there is no specified reference point for the measuring of diffusion distance, and the exact shape and position of the lanthanum-uranium interface has to be accurately known.

A very sharp and narrow activity peak in the alumina at the uranium-alumina interface is expected if the alumina acts as a perfect sink for lanthanum. Instead, a broadened peak was observed. This phenomena may be explained as follows. The alumina is not a perfect sink as was assumed. After all the Al ions in the surface layer of the alumina plug have reacted with diffused lanthanum from the uranium according to reaction (A), fresh aluminum can only be supplied to the surface by solid diffusion from the interior of the alumina plug. By this process, lanthanum diffuses into the plug, and so spreads out its radioactivity throughout the alumina piece. Because the diffusion coefficient is much lower in the solid than in the liquid, the surface of the alumina plug may become so depleted in Al that it no longer acts as a perfect sink

of lanthanum (i.e., reaction (A) is reversible). This is probably the reason why points 4 and 5 in Figure 7 are relatively low.

In the determination of the diffusion coefficient, an error is incurred by the assumption that the total count rate in alumina (which is the area under the peak in Figure 5) is due only to diffusion. As seen from Figure 5, position 15, which is in the liquid uranium, has a higher count rate than expected. This might be due to partial saturation of uranium with lanthanum, due to the failure of alumina to act as a perfect sink, or it might be that the detector is seeing some of the pure lanthanum on top of the uranium. This error could be eliminated by increasing the length of the uranium to about 1 cm so as to insure that the count rate at places like position 15 is not due to the pure lanthanum source.

Following the diffusion experiment, the beryllia crucible was broken and the tantalum linerwas machined off. The alumina held the molten uranium very well and there is no significant amount of leakage of uranium through the alumina-tantalum interface. Hence, the use of an alumina plug in the slagging method for detering the diffusion coefficient is satisfactory.

7. APPENDIX - Effect of Interface Curvature on Lanthanum Activity Measurements

If the window width W and the radius of the crucible R are known, the theoretical count rate as a function of distance from the interface can be determined for various radii of curvature ρ of the uranium-lanthanum interface. In this analysis, it is assumed that no lanthanum is present in the uranium. The geometry is shown in Figure 8.

Let a(z) be the activity when the center of the window is at position z.

a^* = activity when the center of the window at position z = 0 (z = 0 corresponds to the position when the window is just filled with pure lanthanum)

z_o = the position of window at which the detector first sees no lanthanum.

$$\frac{a}{a^*} = \frac{\text{volume of the segment of the La sphere intercepted by the window}}{\text{volume of the cylindrical crucible intercepted by the window}}$$

$$\therefore \quad \frac{a}{a^*} = \frac{1}{\pi R^2 W} \int_{\theta_1}^{\theta_2} \pi \gamma^2 R \sin\theta \, d\theta$$

$$= \frac{R}{W} \left[\frac{1}{3} \cos^3\theta - \cos\theta \right]_{\theta_1}^{\theta_2}$$

θ_1 and θ_2 are defined on Figure 8.

The above equation is a general formula for $\frac{a}{a^*}$.

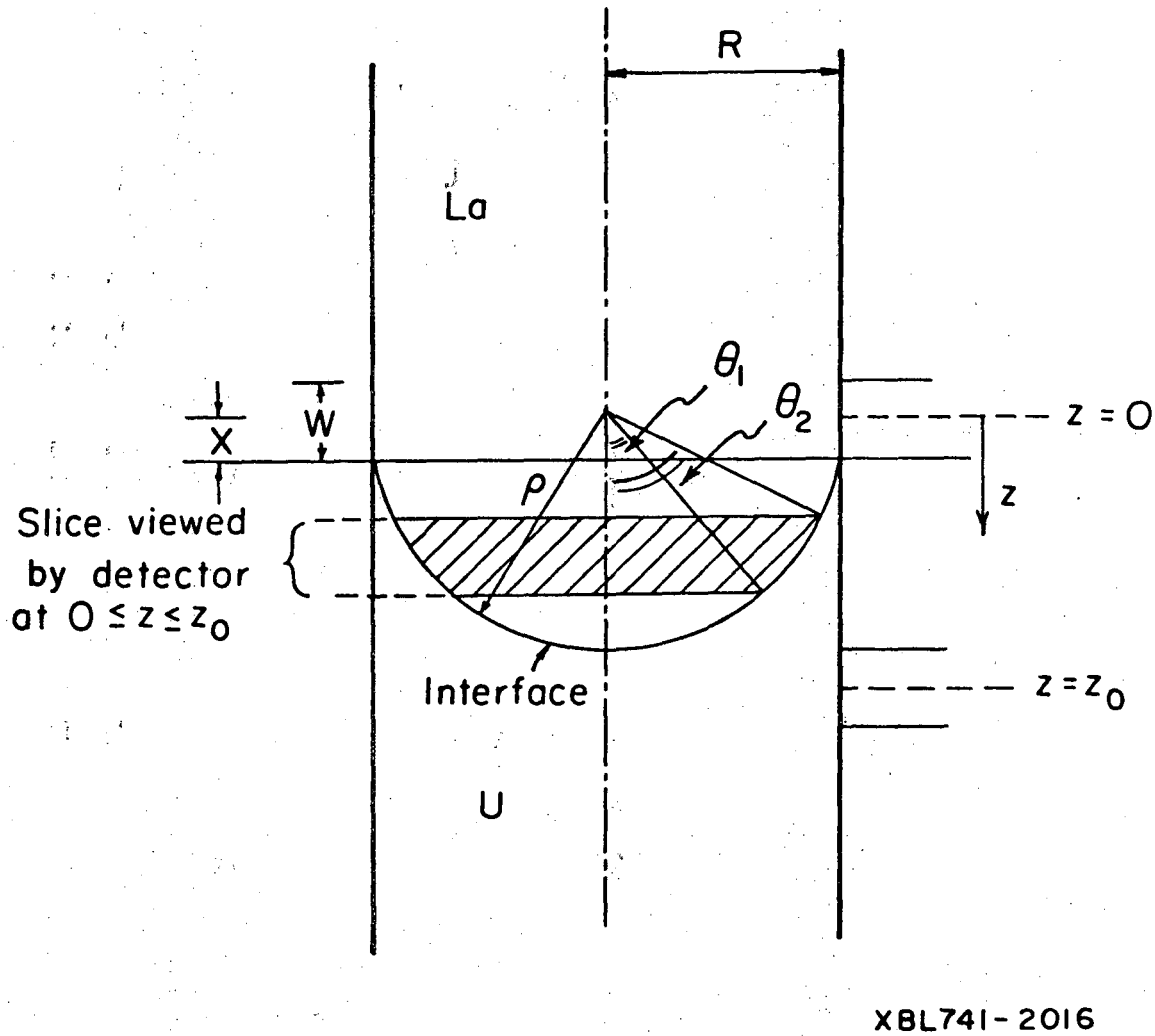

FIGURE 8 The Interface of Molten Uranium and Lanthanum with Radius of Curvature ρ

For each special case, different θ_1 and θ_2 values are applied.

Case (i) $z \leq 0$

$$\frac{a}{a^*} = 1$$

Case (ii) $0 \leq z \leq W$

Detector partly facing the hemishpere, partly facing the pure lanthanum.

$$\frac{a}{a^*} = \frac{\ell}{W} + \frac{R}{W}\left[\frac{1}{3}\cos^3\theta - \cos\theta\right]_{\theta_1}^{\theta_2}$$

$$\cos\theta_1 = \frac{z + x}{\rho} \quad , \quad \cos\theta_2 = \frac{x}{\rho}$$

$$x = \sqrt{\rho^2 - R^2}$$

ℓ is the length of the cylindrical portion of the La ingot intercepted by the window.

Case (iii) $W \leq z \leq z_o - W$

$$\cos\theta_1 = \frac{z + X}{\rho} \quad , \quad \cos\theta_2 = \frac{z + X - W}{\rho}$$

$$\frac{a}{a^*} = \frac{\rho^3}{R^2 W}(\cos\theta_2 - \cos\theta_1)\left[\frac{1}{3}(\cos^2\theta_2 + \cos\theta_1\cos\theta_2 + \cos\theta_1^2) - 1\right]$$

Case (iv) $\underline{z_o - W \leq z \leq z_o}$

$$\theta_1 = 0 \qquad \cos\theta_2 = \frac{X + z - W}{\rho}$$

$$\frac{a}{a^*} = \frac{\rho^3}{4W^3}\left[\frac{2}{3} + \frac{1}{3}\left(\frac{X + z - W}{\rho}\right)^3 - \frac{X + z - W}{\rho}\right]$$

Case (v) $\underline{z > z_o}$

$$\frac{a}{a^*} = 0$$

In Figure 9, $\frac{a}{a^*}$ is plotted versus distance from the interface for various radii of curvature ρ. By fitting the experimental data to one of these theoretical curves the shape of the meniscus can be determined. The data from an experiment prior to the one utilizing the crucible with the alumina plug fell between $\rho/R = 1$ and 1.01, which indicates that La-U interface is very closely hemispherical in shape.

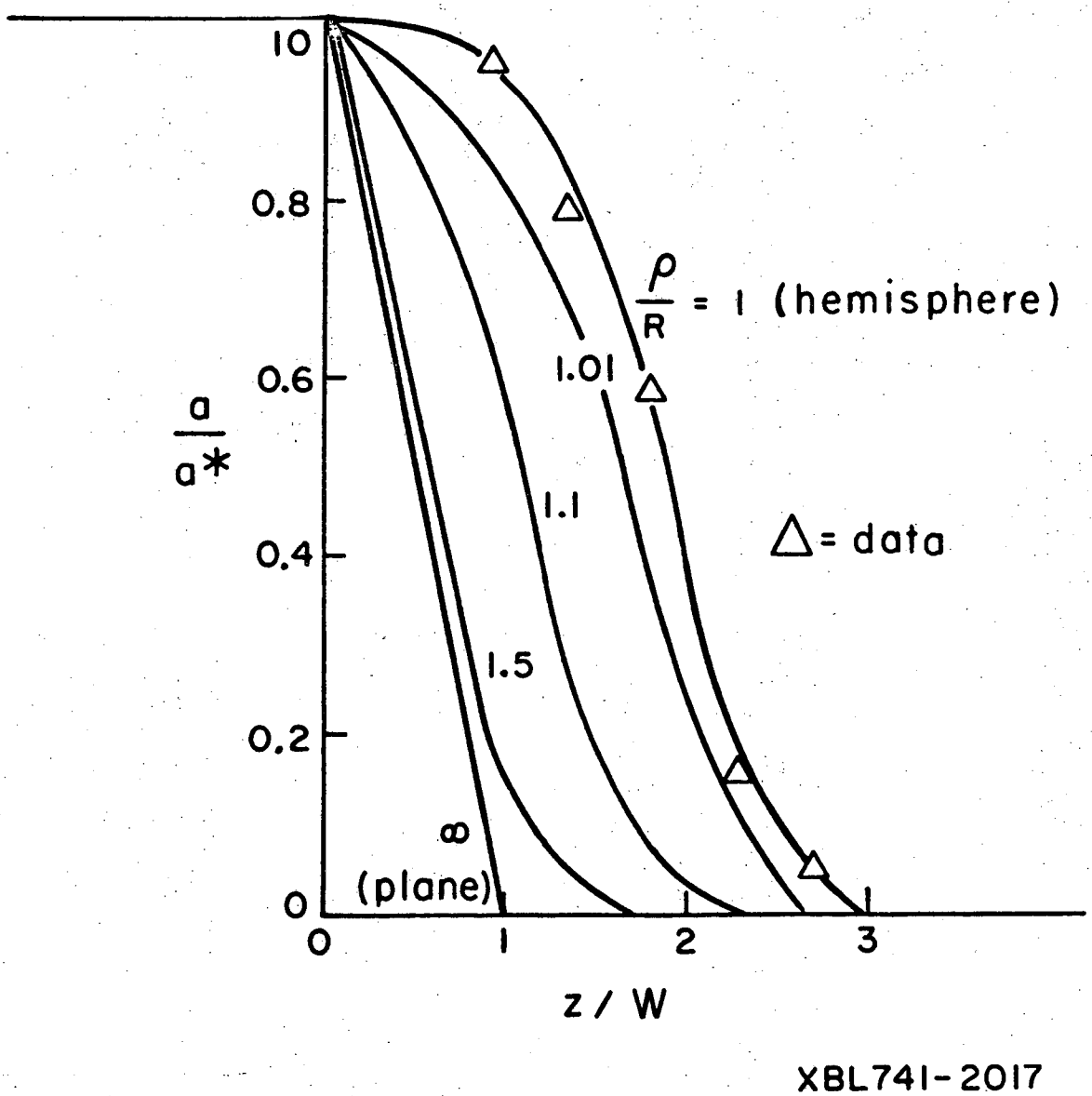

FIGURE 9 Theoretical Fall Off of the Count Rate Due to the Non-Zero Window Width W for Interfaces of Different Curvatures

REFERENCES

1. Edmond Le Borgne, "Lanthanum Diffusion in Molten Uranium", UCRL-19072, Oct. 1969.

2. Jack Hovingh, "Diffusion of Lanthanum in Molten Uranium", LBL-1130.

3. A. W. Castleman Jr, and J. J. Conti, "On Diffusion in Liquid Metals, BNL-14077, 1970.

4. R. B. Bird, J. O. Hirachfelder and C. F. Curtiss, "The Equation of State and Transport Properties of Gases and Liquids", Handbook of Physics.

5. D. R. Olander and A. D. Pasternak, "Mass Transfer and Transport Properties in Fused Salt and Liquid Metal Systems", Processing of the Symposium on Reprocessing of Nuclear Fuels, Ames, Iowa, 1969 (CONF-690801).

6. J. F. Haefling and A. H. Danne, "The Imiscibility Limits of Uranium with the Rare Earth Metals", Trans. Met. Soc. AIME 215, 336.

7. Feder, H. M., Chellen, N. and Ader, M., Proc. Geneva Conf. 9, (1955), 586.

0 0 0 0 4 1 0 0 7 9 5

LEGAL NOTICE

This report was prepared as an account of work sponsored by the United States Government. Neither the United States nor the United States Atomic Energy Commission, nor any of their employees, nor any of their contractors, subcontractors, or their employees, makes any warranty, express or implied, or assumes any legal liability or responsibility for the accuracy, completeness or usefulness of any information, apparatus, product or process disclosed, or represents that its use would not infringe privately owned rights.

TECHNICAL INFORMATION DIVISION
LAWRENCE BERKELEY LABORATORY
UNIVERSITY OF CALIFORNIA
BERKELEY, CALIFORNIA 94720