LBL-25498 c.2
Preprint

Center for Advanced Materials

CAM

RECEIVED
LAWRENCE
BERKELEY LABORATORY
SEP 30 1988
LIBRARY AND
DOCUMENTS SECTION

Submitted to the Journal of Materials Research

Effect of Geometry and Interfacial Resistance on Current Distribution and Energy Dissipation at Metal/Superconductor Junctions

M. Liu and L.C. De Jonghe

TWO-WEEK LOAN COPY
This is a Library Circulating Copy
which may be borrowed for two weeks.

July 1988

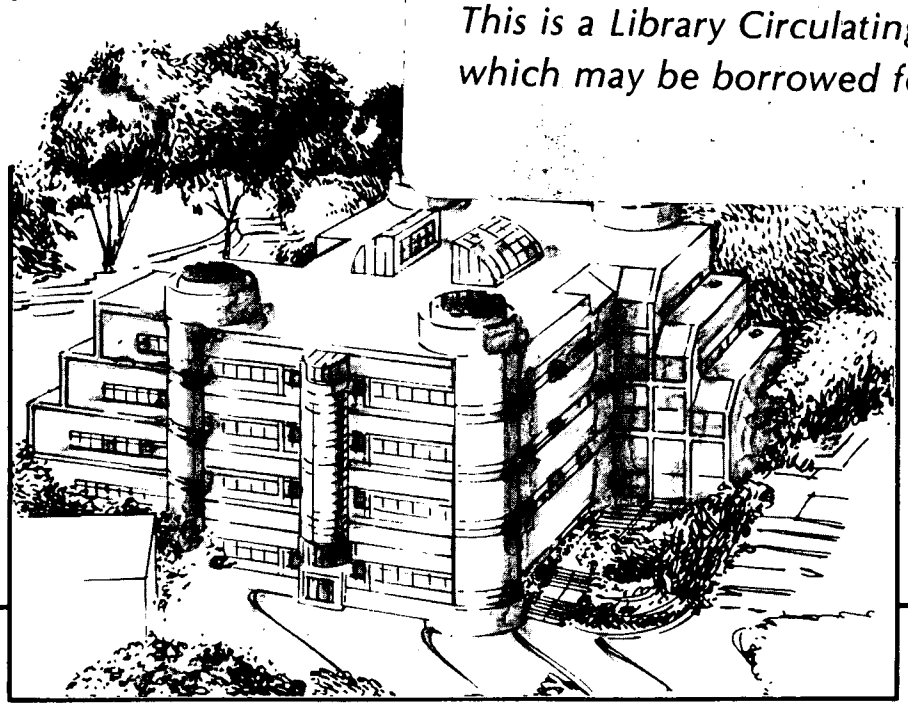

Materials and Chemical Sciences Division

Lawrence Berkeley Laboratory • University of California

ONE CYCLOTRON ROAD, BERKELEY, CA 94720 • (415) 486-4755

Prepared for the U.S. Department of Energy under Contract DE-AC03-76SF00098

LBL-25498 c.2

DISCLAIMER

This document was prepared as an account of work sponsored by the United States Government. While this document is believed to contain correct information, neither the United States Government nor any agency thereof, nor the Regents of the University of California, nor any of their employees, makes any warranty, express or implied, or assumes any legal responsibility for the accuracy, completeness, or usefulness of any information, apparatus, product, or process disclosed, or represents that its use would not infringe privately owned rights. Reference herein to any specific commercial product, process, or service by its trade name, trademark, manufacturer, or otherwise, does not necessarily constitute or imply its endorsement, recommendation, or favoring by the United States Government or any agency thereof, or the Regents of the University of California. The views and opinions of authors expressed herein do not necessarily state or reflect those of the United States Government or any agency thereof or the Regents of the University of California.

LBL # 25498

EFFECT OF GEOMETRY AND INTERFACIAL RESISTANCE ON CURRENT DISTRIBUTION AND ENERGY DISSIPATION AT METAL/SUPERCONDUCTOR JUNCTIONS

Meilin Liu and Lutgard C. De Jonghe

Materials and Chemical Sciences Division
Lawrence Berkeley Laboratory
and
Department of Materials Science and Mineral Engineering
University of California
Berkeley, CA 94720

ABSTRACT

Potential and current distributions and energy dissipation due to Joule heating in metal-superconductor junctions have been computed as a function of geometric parameters and dimensionless interfacial resistance. The primary current distribution is highly non-uniform in the system. The secondary current distribution, however, becomes more uniform as the interfacial resistance increases, but the Joule energy production rate at the interface increases at the same time. The analysis indicates that an optimum dimensionless interfacial resistance exists for a given material and contact geometry, or, conversely, that an optimum geometry for a given dimensionless interfacial resistance can be found which minimizes the total heat generation rate for the configuration.

Introduction

The use of superconducting materials in devices most often requires the incorporation of metal/superconducting junctions. Examples of two commonly encountered geometries of such junctions are sketched in Fig.1a and 1b. Figure 1a corresponds to one in which a thin or thick film of the superconductor, deposited on an insulating substrate, is contacted by a metal lead. The geometry of Fig.1b would be encountered when a fracture has occurred in a metal-cladded superconducting wire. In both of these examples, the current densities at the metal-superconductor junctions, the m/s junctions, are highly non-uniform and peak sharply at the corners of the m/s junction, as indicated schematically in Fig.1.

As is well known in electrochemical applications involving current distributions at electrodes, one must distinguish between a primary current distribution which assumes no interface overpotential, and a more realistic one, the secondary current distribution, which takes into account the possibility of a finite interface overpotential. The problem of finding the current distribution at an m/s junction is in many aspects quite similar to the electrochemical problem of current distributions on electrodes, but should in addition take into account the energy or Joule heat generation at the junction. The primary current distribution will, in fact, exhibit a singularity at the corner of the m/s junction which could in principle lead to large local energy losses in the adjacent metal and even to contact failure initiation.

To analyze the problem of current distribution and energy loss, the electrode problem in electrochemical cell of the appropriate geometry is considered. The current distribution in rectangular electrochemical cells with similar configuration as shown in Fig.2b, has been treated in the literature [1-3]. The primary current distribution predicts infinite current densities at the marked corner of the electrode. This singularity in an electrochemical system is, however, removed by various processes that

lead to interface overpotentials and to current redistribution: the finite kinetics of electrochemical reactions, the transport rate limitation of electrochemical species, or the changes in the electrode configuration brought about by electrodeposition or dissolution [4]. In the m/s junction system these processes modifying the primary current distribution are not present. At the same time, the average current densities are many order of magnitude higher than in electrochemical systems, making energy loss consideration due to Joule heating much more important. A practical parameter that allows for a controlled modification of the current distribution is available, however: the m/s interface resistance. In this paper, the effects of the m/s junction geometry and interface resistance on the current distribution and on the energy dissipation are discussed. A rectangular domain with an interrupted junction, as shown in Fig.2b, corresponding to the situations sketched in Fig.1, has been chosen for the analysis.

Mathematical Model

Consider a superconducting/metal junction as pictured in Fig.2a. If the potential or current distribution is independent of z, the system is reduced to a two-dimensional problem as shown in Fig.2b. Under the assumption that the bulk metal phase is isotropic and the metal superconductor contact interface is uniform, with the superconductor at equipotential, the potential, $\Phi(x,y)$, must satisfy Laplace's equation:

$$\partial^2\Phi/\partial x^2 + \partial^2\Phi/\partial y^2 = 0 \qquad [1]$$

within the domain of the metal phase(Ω_m). The following boundary conditions apply:

(1) the derivatives of the potential Φ normal to the insulated boundary, Γ_1, vanish at the boundary, i.e.

$$\nabla\Phi \cdot n = 0 \qquad \text{on } \Gamma_1 \qquad [2]$$

(2) the potential at the end of the metal phase is constant for the ratio of L/b sufficiently large:

$$\Phi(L,y) = \Phi_o \qquad \text{on } \Gamma_2 \qquad [3]$$

(3) the potential at the metal side of the m/s interface is specified as

$$\Phi(x,0) = \Phi_1 - \Delta V_i(x) \qquad \text{on } \Gamma_3 \qquad [4]$$

where Φ_1 is potential of the superconductor phase and ΔV_i is the potential drop across the interface which depends on the nature of the m/s contact and the current density at the interface. Therefore, the surface of the metal phase near the metal superconductor interface is not an equipotential surface if the contact resistance is finite. For an linear contact, ΔV_i can be approximated, at sufficient normal current densities, by

$$\Delta V_i(x) = V_o + \alpha \cdot i_n(x) \qquad [5]$$

where V_o is a constant, α is the interfacial resistance [ohm-cm^2], and i_n is the current density normal to the contact interface. This type of contact resistance has been reported recently for many metal-superconductor junctions, such as, aluminum-YBCO, noble-metal(silver, gold)-YBCO, and indium-YBCO junctions [5-7].

Numerical Calculation

The normalized potential within the metal domain

$$U(x,y) = (\Phi(x,y) - V_o - \Phi_o) \,/\, (\Phi_1 - V_o - \Phi_o) \qquad [6]$$

can be approximated by an expression of the form

$$\sum_{j=1}^{N} \phi_j \Psi_j(\xi,\eta) \qquad [7]$$

where the ϕ_j are the nodal potential values to be determined, N is the number of nodes in an element, and the $\Psi_j(\xi,\eta)$ are the approximation functions (in natural coordinates ξ and η) associated with each node. By substituting the above approximation into Eqn.1 and minimizing the weighted residual using $\Psi_j(\xi,\eta)$ as a weighing function, the boundary-value problem, defined in Eqns 1-4, can be transferred to the following matrix equation for each element

$$[\mathbf{K}_{ij}] \cdot [\phi_j] = [\mathbf{F}_i] \qquad [8]$$

where

$$K_{ij} = \int_{\Omega_e} [(\partial\Psi_i/\partial x)(\partial\Psi_j/\partial x)+(\partial\Psi_i/\partial y)(\partial\Psi_j/\partial y)]d\Omega_e \qquad [9]$$

$$F_i = \oint_{\Gamma_e} \Psi_i \; [(\partial U/\partial x) + (\partial U/\partial y)] \; ds \qquad [10]$$

with Ω_e and Γ_e representing the domain and the boundary of the element, respectively. Rectangular elements with 9 nodes and piecewise quadratic interpolation functions are used in the calculation.

The current density in the metal phase, $\mathbf{i}$, and the current density normal to the interface, i_n, follow approximately from the potential, thus

$$\mathbf{i}(x,y) = -\sigma \; [(\partial U/\partial x)\,\mathbf{x} + (\partial U/\partial y)\,\mathbf{y}] \qquad [11]$$

and

$$i_n(x,0) = -\sigma \; (\partial U/\partial y)_{y=0}, \qquad 0 \le x \le b \qquad [12]$$

Energy Dissipation

As current flows through the system, two Joule heating processes contribute simultaneously to the energy loss. One is in the bulk metal phase and the other is at the interface.

The Joule heat production rate [Watt] in the bulk metal phase is

given by

$$dQ_b/dt = \int_{\Omega_m} \mathbf{i}^2/\sigma \; d\Omega_m \qquad [13]$$

where $\mathbf{i}$ is the current density, and σ is the conductivity of the bulk metal phase in domain Ω_m.

Variational analysis indicates on the one hand that, subject to the constraint of a constant total current

$$I = \int_0^b i_n \, dx = \text{constant} \qquad [14]$$

dQ_b/dt first decreases as the current density normal to the interface becomes more uniform, reaches a minimum, and then stays constant when the normal current density becomes completely uniform, i.e., when

$$i_n(x) = i_{avg} \qquad 0 \le x \le b \qquad [15]$$

The average current density, i_{avg}, is defined as

$$i_{avg} = (1/b) \int_0^b i_n \, dx \qquad [16]$$

On the other hand, the Joule heat production rate [Watt] at the contact interface, expressed as

$$dQ_i/dt = \int_0^b (\Delta V_i) \cdot i_n \, dx \qquad [17]$$

increases as the current distribution becomes more uniform as a consequence of increase of interfacial resistance.

The total energy dissipation rate in the system is then the sum of the two heating processes which are approximated by the expressions

$$dQ_b/dt = \sigma \int_{\Omega_m} [(\partial U/\partial x)^2 + (\partial U/\partial y)^2] \, d\Omega_m \qquad [18]$$

and

$$dQ_i/dt = I \cdot V_o - \sigma \int_0^b (\Delta V_i - V_o)(\partial U/\partial y)_{y=0}\, dx \qquad [19]$$

Results and Discussion

Primary Distribution and Junction Geometry

The primary current distributions at the m/s interface are shown in Fig.3 for different junction geometries. Evidently, the current distribution becomes more uniform as the ratio of a/b increases provided that L is large enough so that $\Phi(L,y)$ at Γ_2 is constant. In other words, at constant b, the primary current distribution becomes more uniform as the dimension a increases, and at constant a, the current distribution becomes more uniform as dimension b decreases, if the influence of L is excluded. Obviously, the dimension L has no effect on current distribution as long as the potential at the end of the metal phase is uniform. The minimum dimension L below which $\Phi(L,y)$ becomes non-uniform depends on dimension a and b. Fig.4 shows the effect of the geometric parameters on the primary potential distribution at the tail region of the metal phase. Clearly, the minimum length L at which $\Phi(L,y)$ is practically uniform increases as the ratio a/b increases. These geometric effects could provide guidance for device design.

Secondary Distribution and Interfacial Resistance

The secondary current distribution at m/s junction for different geometric parameters are shown in Fig.5. The effects of geometry on the secondary distributions are similar to those on the primary distribution.

The current density normal to the interface is plotted as a function of the dimensionless interfacial resistance R, which is defined as

$$R = \alpha \cdot \sigma / b \qquad [20]$$

where α is the interfacial resistance [Ohm cm^2], σ is the conductivity [Ohm^{-1} cm^{-1}] of the bulk metal phase, and b is the length [cm] of the interface as defined in Fig. 1b. Unlike the primary distribution, the secondary current distribution depends not only on the geometry but also on the electrical properties of the bulk phase and the nature of the metal-superconductor interface

The computations clearly indicate that as the dimensionless interfacial resistance increases the current distribution at the interface becomes more uniform. In other words, the increase of the interfacial resistance, the increase of the conductivity of the bulk metal phase, or the decrease of the dimension b, will make the secondary current distribution more uniform.

Joule Heat Production Rate

Although the Joule heat production rate in the bulk metal phase decreases as the secondary current distribution becomes more uniform (Fig.6a), the Joule energy production rate *at* the interface increases (Fig.6b) as the dimensionless interfacial resistance increases. However, there exists an optimum dimensionless interfacial resistance which *minimizes* the total energy loss for a given geometry, as shown in Fig.7a-7d. This effect becomes more evident as the ratio a/b gets smaller or as the primary distribution gets worse at the interface. Based on this dimensionless interfacial resistance parameter, R, an optimum contact resistance, α, can be estimated for various metal-superconductor junctions. The optimum parameters (R and α) for several metal-superconductor contacts with different geometric parameters are tabulated in Table I. These optimized interfacial contact resistances can be precisely achieved through materials processing.

Alternatively, for a given material and interfacial resistance, there exists an optimum device geometry. In other words, instead of changing the interfacial resistance, the optimum can also be achieved through modification the geometric parameters of the m/s junction.

Conclusions

The primary current distribution is uniquely determined by the geometry of the metal-superconductor junctions. As the ratio of a/b increases, the primary current distribution becomes more uniform provided that dimension L is so long that it has no effect.

The secondary current distribution is determined by the contact resistance of the metal-superconductor junction and the conductivity of the bulk metal phase. As the contact resistance of the interface and the conductivity of the metal phase increase, the secondary current distribution becomes more uniform, but the interfacial Joule energy production rate increases at the same time.

Optimization indicates that for a given material and device geometry, there exists an optimum interfacial contact resistance, and for a given material and contact resistance there exists an optimum geometry, which minimizes the total Joule heat generation in the system.

Acknowledgement

This work was supported by the Division of Materials Science, Office of Basic Energy Service, U.S. Department of Energy, under contract No. DE-AC03-76F00098.

Notations

a	*height of the metal phase [cm]*
b	*length of the metal-superconductor junction [cm]*
$\mathbf{i}$	*current density in the metal phase [A/cm^2]*
i_n	*current density normal to the metal-superconductor junction [A/cm^2]*
i_{avg}	*average current density normal to the m/s junction [A/cm^2]*
I	*total current density normal to the m/s junction [A/cm^2]*
L	*length of the metal phase [cm]*
Q_b	*Joule heat generated in the bulk metal phase [Joule]*
Q_i	*Joule heat generated at the m/s junction, [Joule]*
Q	*total Joule heat generated in the system,* $Q = Q_i + Q_b$
R	*dimensionless interfacial resistance,* $R = \alpha\,\sigma/b$
U	*normalized potential, dimensionless*
ΔV_i	*potential drop across the metal-superconductor interface, [volt]*
α	*interfacial resistance for linear contact, [Ohm•cm^2]*
Γ_1	*insulated boundaries*
Γ_2	*end of the metal phase*
Γ_3	*metal-superconductor junction*
Γ_e	*boundary of an element*
ϕ_j	*nodal potential values, dimensionless*
$\Phi(x,y)$	*potential within the bulk metal phase, [volt]*
Φ_o	*potential at the end of the metal phase, [volt]*
Φ_1	*potential of the superconductor phase, [volt]*
σ	*conductivity of the bulk metal phase [Ohm•cm^2]*
Ω_e	*domain of an element*
Ω_m	*domain of the bulk metal phase*
$\Psi(\xi,\eta)$	*approximation function in natural coordinates* ξ,η

References

[1] Moulton, H. F., "Current Flow in Rectangular Conductors", Proceedings of the London Mathematical Society (ser. 2), 3 (1905), 104-110.

[2] Tobias, C. W., "Numerical Evaluation of Current Distribution in Electrode Systems" (Abs. No. 323) in C.I.T.C.E.(International Committee for Electrochemical Thermodynamics and Kinetics) 13th meeting, Roma, September 24-29, 1962.

[3] Fleck, R. N., Numerical Evaluation of Current Distribution in Electrochemical Systems. M.S. Thesis, University of California, Berkeley, September, 1964 (URCL-11612)

[4] Newman, J. S., "Electrochemical Systems", Prentice-Hall, Englewood Cliffs, N.J., 1972

[5] Richardson, T. and L. C. De Jonghe, "Aluminum Cladding of High Tc Superconductor by Thermocompression Bonding", LBL #25499, July 1988.

[6] Ekin, J. W., T. M. Larson, N. F. Bergren, A. J. Nelson, A. B. Swartziander, L. L. Kazmerski, A. J. Panson, and B. A. Blankenship, Appl. Phys. Lett. 52, 1819 (1988).

[7] Tzeng, Y., J. Electrochem. Soc., Vol 135, 1309 (1988).

[8] *CRC* Handbook of Chemistry and Physics, 65th ed., 1984-1985.

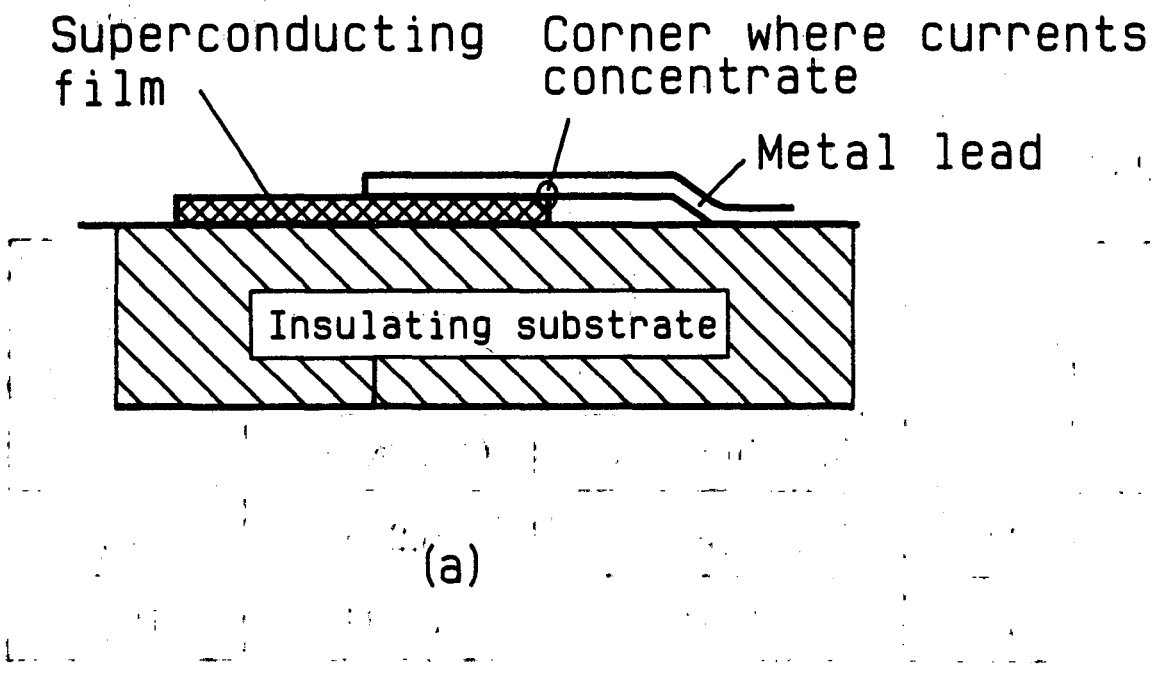

(a)

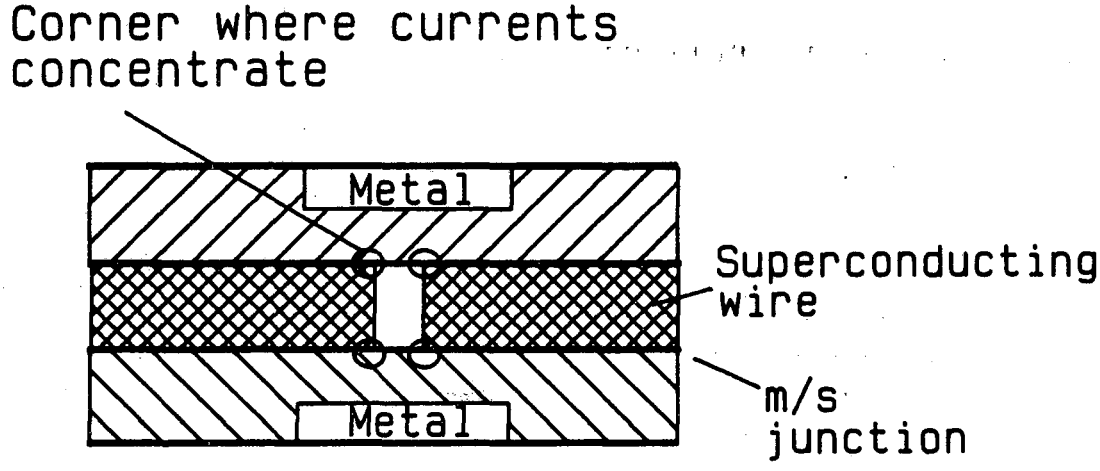

(b)

XBL 886-2315

Fig.1

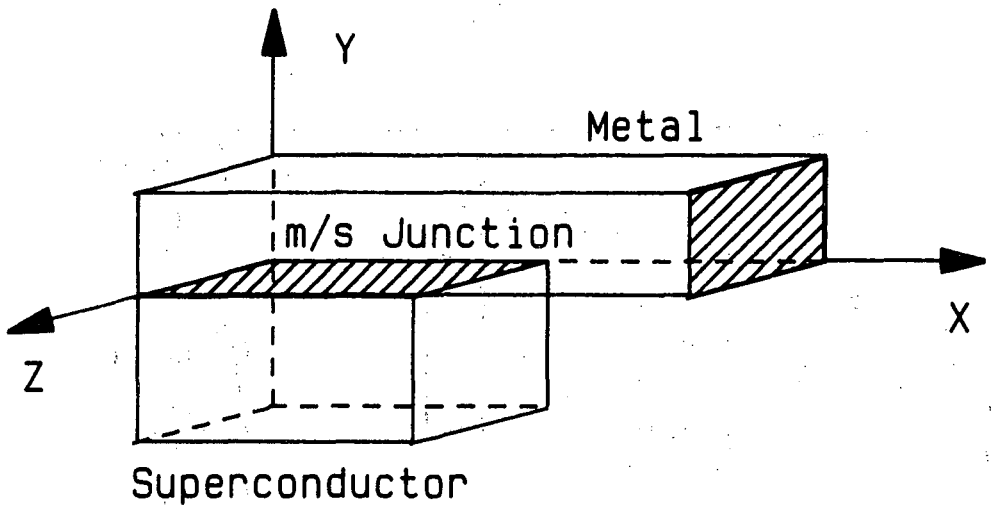

(a)

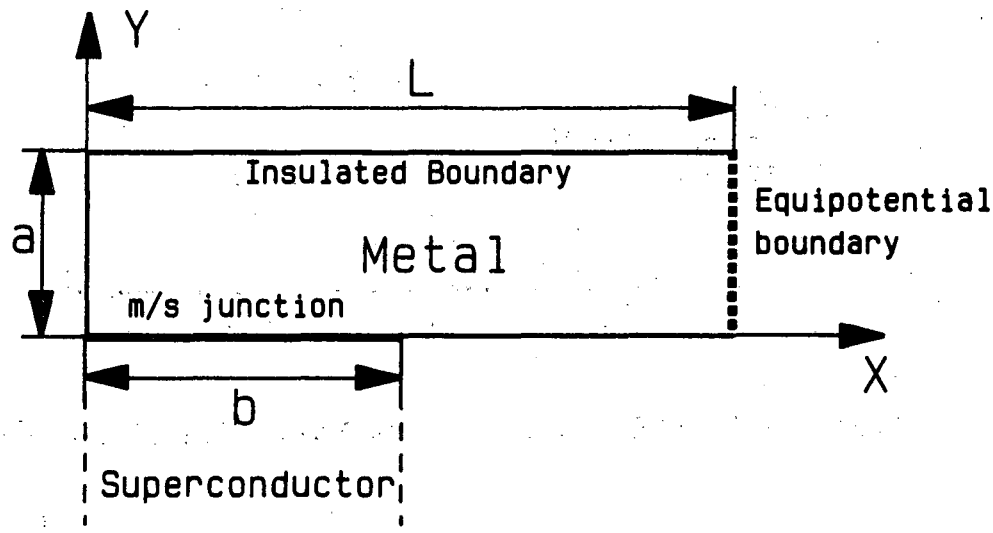

(b)

XBL 886-2316

Fig.2

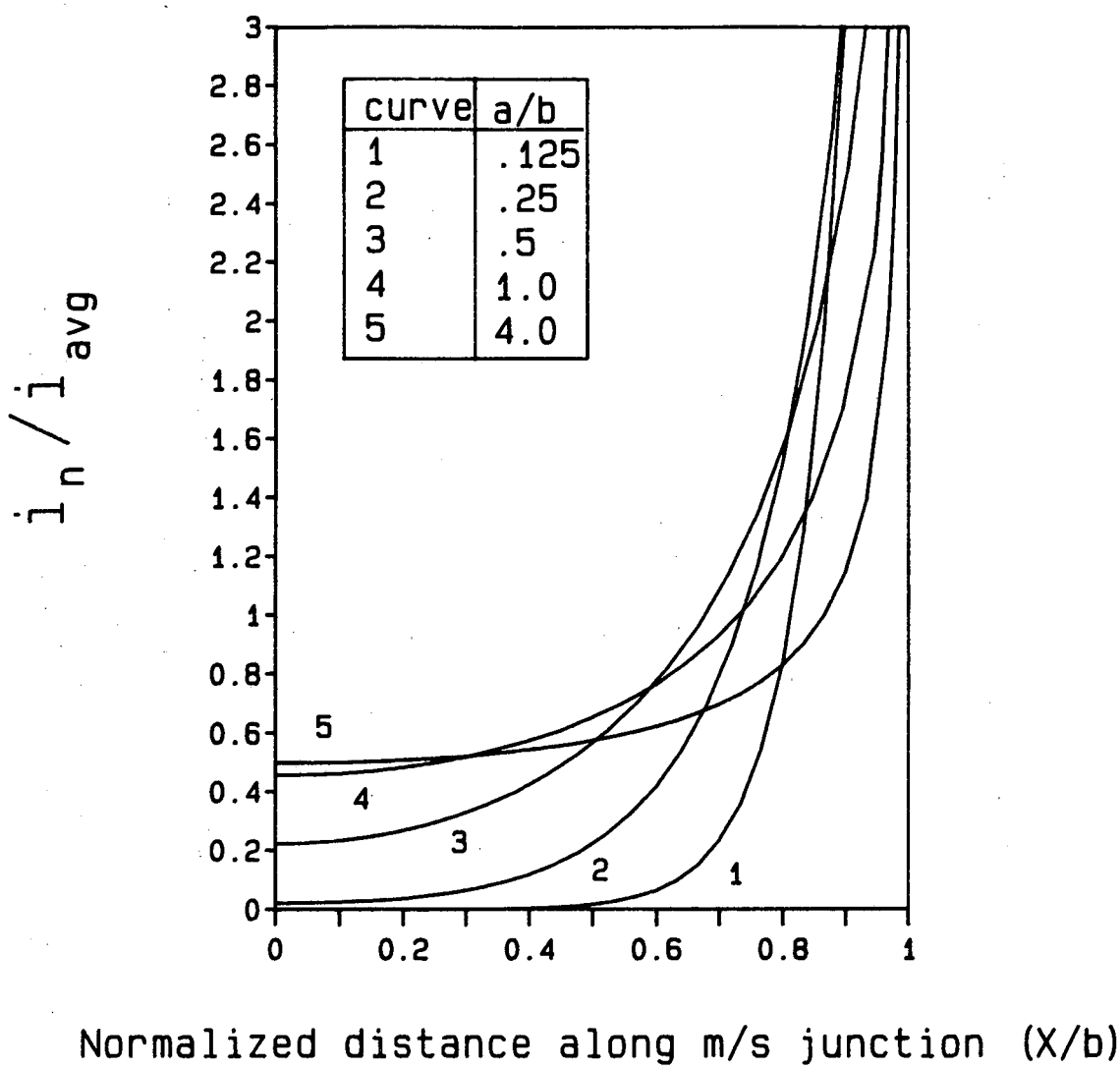

Fig.3

XBL 886-2317

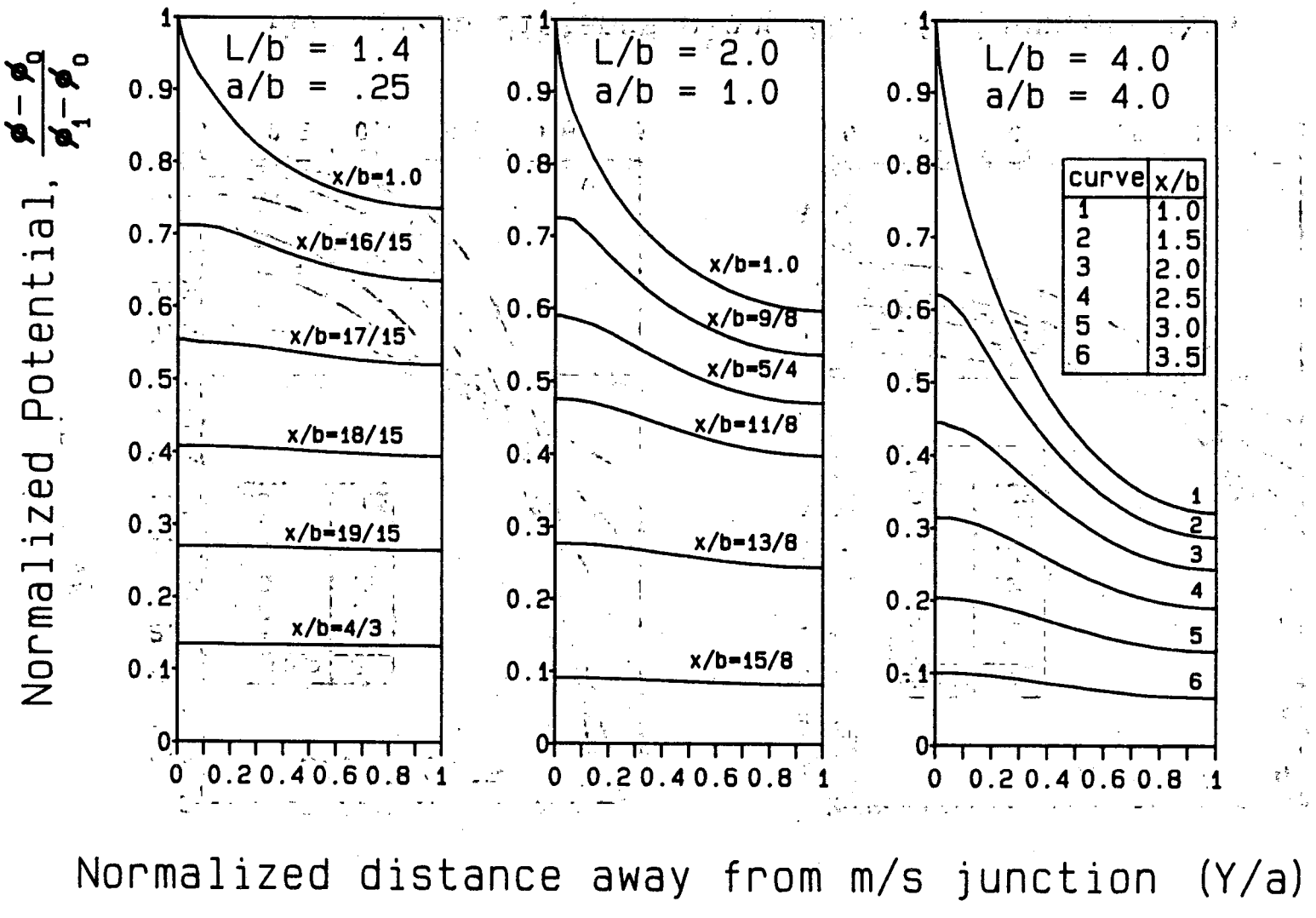

Fig.4

XBL 886-2318

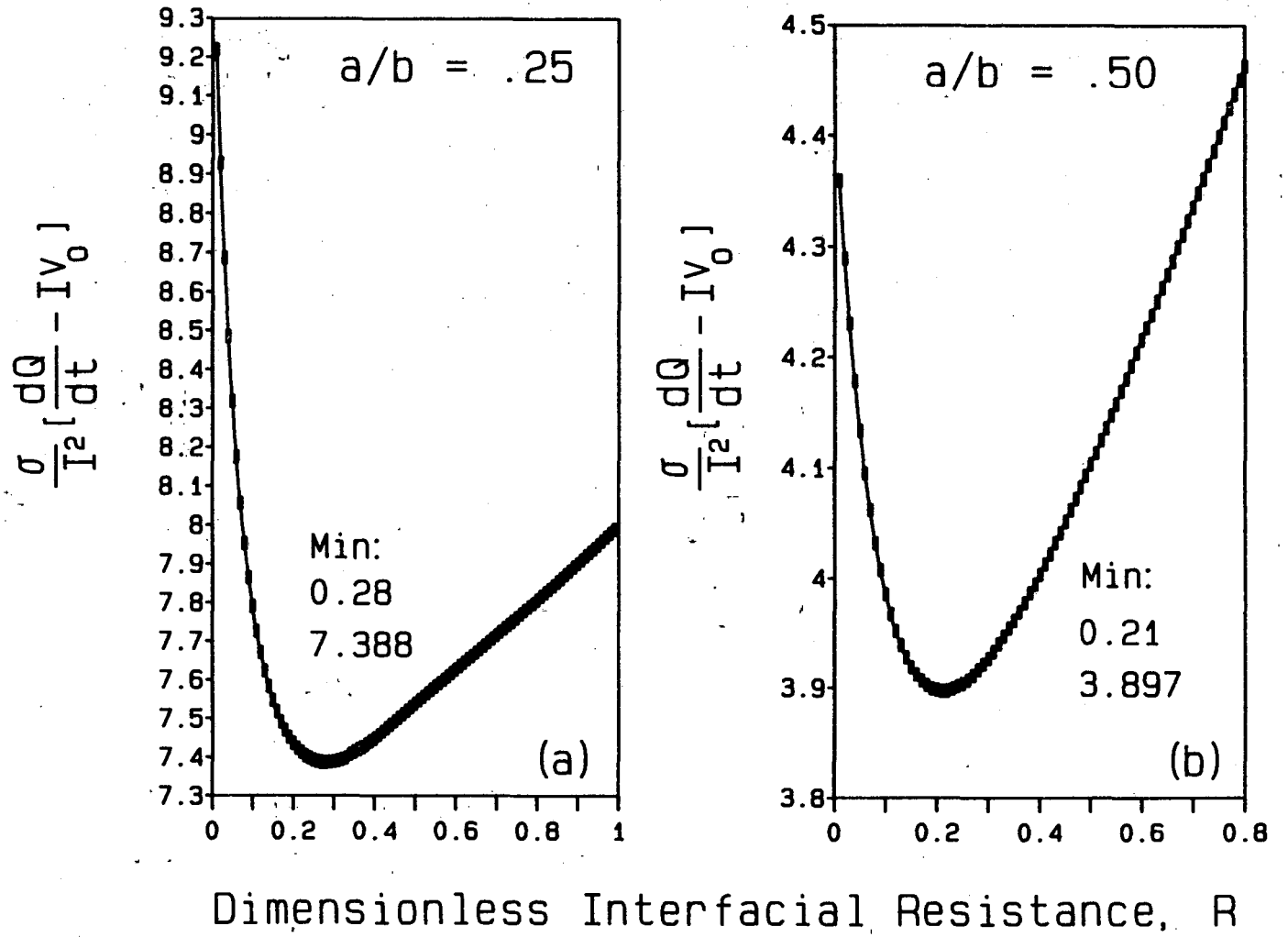

XBL 886-2321

Fig.7

LAWRENCE BERKELEY LABORATORY
TECHNICAL INFORMATION DEPARTMENT
UNIVERSITY OF CALIFORNIA
BERKELEY, CALIFORNIA 94720