LBL-25547 c.2

# Lawrence Berkeley Laboratory
UNIVERSITY OF CALIFORNIA

## EARTH SCIENCES DIVISION

RECEIVED
LAWRENCE
BERKELEY LABORATORY
SEP 3 1988
LIBRARY AND
DOCUMENTS SECTION

Presented at the International Conference on Fluid Flow
in Fractured Rocks, Atlanta, GA, May 15–19, 1988

# Numerical Modeling of Multiphase and Nonisothermal Flow in Fractured Media

K. Pruess and T.N. Narasimhan

July 1988

TWO-WEEK LOAN COPY
This is a Library Circulating Copy
which may be borrowed for two weeks.

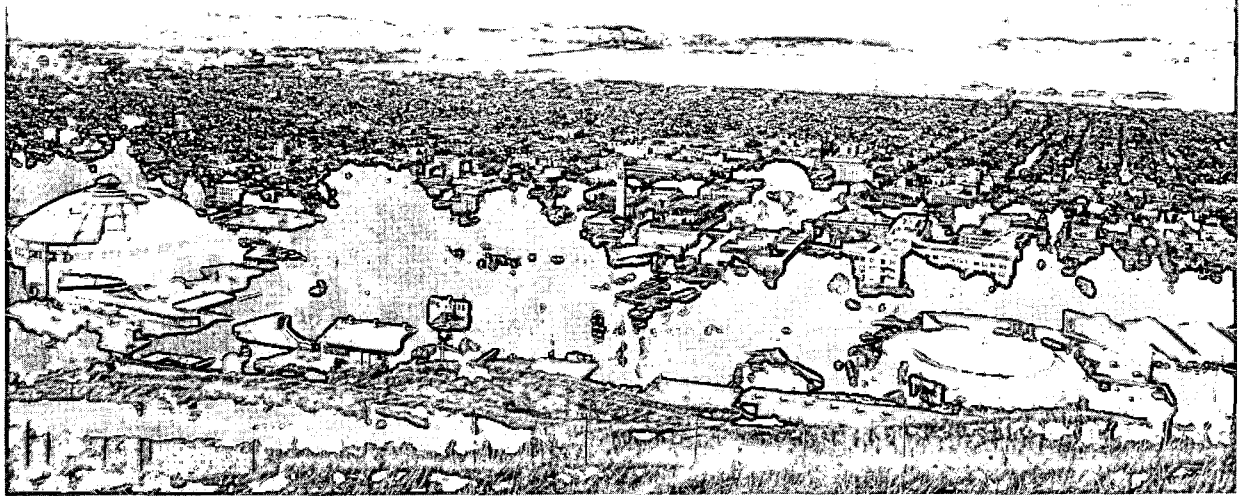

Prepared for the U.S. Department of Energy under Contract Number DE-AC03-76SF00098.

LBL-25547 c.2

## DISCLAIMER

This document was prepared as an account of work sponsored by the United States Government. While this document is believed to contain correct information, neither the United States Government nor any agency thereof, nor the Regents of the University of California, nor any of their employees, makes any warranty, express or implied, or assumes any legal responsibility for the accuracy, completeness, or usefulness of any information, apparatus, product, or process disclosed, or represents that its use would not infringe privately owned rights. Reference herein to any specific commercial product, process, or service by its trade name, trademark, manufacturer, or otherwise, does not necessarily constitute or imply its endorsement, recommendation, or favoring by the United States Government or any agency thereof, or the Regents of the University of California. The views and opinions of authors expressed herein do not necessarily state or reflect those of the United States Government or any agency thereof or the Regents of the University of California.

# NUMERICAL MODELING OF MULTIPHASE AND NONISOTHERMAL FLOW IN FRACTURED MEDIA

K. Pruess and T. N. Narasimhan

Earth Sciences Division
Lawrence Berkeley Laboratory
University of California
Berkeley, California 94720

## ABSTRACT

Fractured flow systems occur in a great diversity of geometric configurations and structures, from poorly connected to highly connected, and with diverse fluids and flow processes. Corresponding to this natural diversity there is a multitude of approaches for description and analysis. Our recent work focuses on modeling of flow systems with well-connected fractures in which a continuum treatment of fracture permeability on a scale large compared to characteristic matrix block dimensions appears unproblematic. We are especially interested in processes involving substantial fluid or heat exchange between fractures and rock matrix, such as occur in the recovery of oil, gas, and geothermal resources, and in nuclear waste isolation in fractured partially saturated media.

Approaches for modeling of coupled multiphase fluid and heat flow in fractured media include (i) "explicit" modeling of fractures, which are represented as domains with small spatial scale and large permeability; (ii) effective continuum

approximations, in which one attempts to model the composite behavior of a fractured porous medium in terms of a single effective continuum; and (iii) ''hybrid'' models such as double- or multiple-porosity techniques which combine features of the explicit fracture and effective continuum approaches.

We present examples of each of these approaches. The explicit fracture approach has been applied to investigate thermohydrologic conditions near high-level nuclear waste packages emplaced in partially saturated fractured tuffs. Besides providing some useful insight into multiphase flow processes this approach substantiates an effective continuum approximation, which leads to a drastic simplification in the modeling of fractured flow systems. A consideration of diffusive processes in rock matrix and fractures provides criteria for the validity of the effective continuum approximation; these have been verified by means of numerical experiments. Flow studies using the method of ''multiple interacting continua'' have demonstrated how effects of global flow tend to diminish sensitivity to individual matrix block response in enhanced oil recovery and in heat mining in geothermal systems. In some cases simple semi-analytical techniques are found to provide an adequate approximation to the complexities of multiple-continua behavior.

## INTRODUCTION

Multiphase flow in fractured media occurs in many engineering applications related to the recovery of resources, such as oil, gas, and geothermal energy. It is also encountered in nuclear waste isolation and disposal, and in other environmental problems.

Of most interest for resource recovery are flow systems in which fractures are plentiful and well connected, providing good permeability and relative ease of extraction. For waste isolation, on the other hand, it is usually desirable to seek out sparsely fractured formations with poor connectivity, so that transport through the medium is

minimized. A practically important exception to this general distinction is provided by the thick unsaturated tuffs at Yucca Mountain, Nevada. Despite rather strong fracturing with large fracture permeability, perhaps in the Darcy-range, these formations are being considered as hosts for a high-level nuclear waste repository because capillary effects tend to make the fractures unavailable to liquid phase flow and the transport of non-volatile contaminants (Wang and Narasimhan, 1985, 1986).

Fractured flow systems occur in a great diversity of geometric configurations and structures, from poorly connected to highly connected, and with diverse fluids and flow processes. Corresponding to this natural diversity there is a multitude of approaches for description and analysis. In the present paper we review some of our recent work on modeling of flow systems with well-connected fractures, in which a continuum treatment of fracture permeability on a scale large compared to characteristic matrix block dimensions appears unproblematic. We are especially interested in processes involving substantial fluid or heat exchange between fractures and rock matrix. The main issues arising in the description of such systems are (i) global flow, which may involve different geometries for different phases, and (ii) interporosity flow between matrix and fractures. Before turning to methods for dealing with these essentially geometric issues, we shall briefly summarize some concepts and tools for modeling multiphase processes.

## MULTIPHASE FLOW

Multiphase processes in fractured media do not differ fundamentally from those in porous media. Special issues for numerical modeling arise in two ways: Firstly, the presence of fractures introduces structure on a small scale, giving rise to more severe non-linear behavior (relative permeabilities and capillary pressures, changes of porosity and permeability with pore pressure and stress); and secondly, the small but often very active fracture volume tends to impose severe time step limitations in numerical simulations. In order to effectively deal with multiphase flow problems in fractured media,

we have developed a general purpose simulator MULKOM which implements the following techniques (Pruess, 1988).

(1) The mass- and energy-balance equations are discretized in space by means of "integral finite differences" (IFD; Narasimhan and Witherspoon, 1976) to attain the geometric flexibility needed for describing highly heterogeneous systems;

(2) for unconditional stability all flow terms are evaluated fully implicitly at the incremented time level;

(3) because of the often very strong coupling between mass and heat flow all governing equations are solved simultaneously in a fully coupled manner;

(4) no approximate linearizations are performed; Newton-Raphson iteration is used throughout to handle the non-linearities;

(5) to avoid time step limitations from requirements of diagonal dominance in the Jacobian matrix, the linear equations arising at each iteration step are solved by direct matrix methods;

(6) the linear algebra is performed with the program package "MA28" (Duff, 1977), which implements a sparse version of LU-decomposition with random sparsity structure, so that the geometric flexibility of the IFD method can be exploited to its fullest extent; and

(7) MULKOM has a modular structure (see Figure 1), so that flow systems with different fluids can be modeled simply by interfacing with appropriate modules for PVT properties of multiphase multicomponent mixtures.

A summary of the presently available fluid property modules is given in Table 1. More detailed information on MULKOM can be found in a recent article by Pruess (1988). A detailed user's guide is available for a version of MULKOM for non-isothermal two-phase two-component flow of water and air, which is known as "TOUGH" (Pruess, 1987).

Table 1. MULKOM fluid property modules.

| Components | Number of Components |
|---|---|
| Water | 1 |
| Water at near-critical conditions | 1 |
| Two waters | 2 |
| Water, $CO_2$ | 2 |
| Water, NaCl | 2 |
| Water, air | 2 |
| Water, $SiO_2$ | 2 |
| Water, volatile hydrocarbon, non-volatile hydrocarbon | 3 |
| Water, gas, foam | 3 |

## REPRESENTATION OF FLOW SYSTEMS

When modeling flow in fractured media different approaches can be taken to represent flow geometry (Narasimhan, 1982). The major alternatives are (i) explicit representation of all fractures, (ii) effective continuum approximations, and (iii) multiple porosity techniques. We shall give brief discussions of each of these methods.

## EXPLICIT FRACTURES

In this approach fractures are explicitly included as domains with small spatial scale in the definition of a porous flow problem. Conceptually this is the simplest approach; but for systems with significant interporosity flow between fractures and matrix its applicability is limited to problems with very few fractures, or for fundamental studies of idealized problems with a high degree of symmetry. Pruess, Tsang, and Wang (1985, 1988a) used this approach for studying conditions near high-level

nuclear waste packages emplaced in an unsaturated fractured medium (see Figure 2).

Problem parameters were chosen to be representative of the conditions at Yucca Mountain, Nevada. The major thermohydrologic phenomena observed in the simulations are depicted in Figure 3.

Heat from the waste packages enters the host rock where it causes vaporization of formation water. Most of the vapor flows towards the fractures, which act as essentially constant-pressure sinks. In the fractures the vapor flows outward and condenses as it encounters cooler wall rock. The simulations indicate that the fate of the condensate depends on the relative permeability characteristics of the fractures, which are unknown at the present time. At ambient suction conditions, estimated to be near -1 MPa, liquid can be held by capillarity only in fractures with apertures less than 0.1 microns. Therefore the bulk of most fractures will be drained, but liquid can still be present either in surface roughness, or as a thin adsorbed film on the fracture walls. If such liquid is assumed to have appreciable mobility most of the condensate will flow in the fracture surfaces back towards the heat source; if liquid is not mobile in the fractures the condensate will be sucked into the rock matrix and will then migrate down the saturation profile towards the heat source. Either way a vapor-liquid counterflow process known as ''heat pipe'' develops which is a very efficient heat transfer mechanism.

Under conditions of non-negligible liquid mobility in the fractures, the heat pipe approaches a balanced counterflow (liquid backflow approximately equal to vapor outflow) after an initial transient period, maintaining two-phase conditions all the way to the surface of the waste canister emplacement hole. When liquid is immobile in the fractures the backflow of liquid is impeded by the very low permeability of the rock matrix (of the order of 1 microdarcy), so that the heat pipe is imbalanced: Outflow then exceeds backflow, and the vicinity of the waste packages is predicted to dry up. Depending on the unknown relative permeability characteristics of the fractures, therefore, the conditions near the waste packages might either remain two-phase with moderate temperatures (near 100°C, because in two-phase conditions temperature is

constrained by pressure, which remains near ambient 1 bar); or the host rock may dry up with maximum temperatures in excess of 250°C. Results from heater experiments in G-tunnel, Nevada Test Site, suggest that both types of behavior may be possible (Zimmerman and Blanford, 1986). We have proposed carefully controlled laboratory experiments to determine the most likely thermohydrologic environment of waste packages, and to provide input for waste package design considerations.

## EFFECTIVE CONTINUUM

At the opposite extreme from an explicit representation of fractures is an approach in which one attempts to model the composite behavior of a fractured porous medium in terms of a single effective continuum. Such a simplification is highly desirable for problems such as nuclear waste isolation which involve large space and time scales. On the basis of numerical simulation results obtained for an explicit representation of fractures, and using various analytical techniques, we have developed an effective continuum formulation and estimated its range of applicability (Pruess et al., 1985, 1988b, 1988c).

The basic idea behind the effective continuum approximation is the following. Suppose a fractured porous medium with well-connected fractures and a tight rock matrix is subjected to a hydrologic or thermal perturbation. It will then undergo a change in thermodynamic conditions which will tend to propagate rapidly through the fractures, but will migrate only slowly into the tight unfractured rock. However, if the rate of change in thermodynamic conditions caused by the external perturbation is "sufficiently" slow, and the equilibration locally between fractures and rock matrix is "sufficiently" rapid, then fractures and rock matrix will remain in approximate thermodynamic equilibrium locally at all times. In this case it is not necessary to keep track of the changes in fracture and matrix conditions separately. One set of thermodynamic state variables is then sufficient to characterize the flow system locally, and it should be possible to represent the fractured porous medium by means of a single

effective continuum.

From a consideration of local thermodynamic equilibrium we have been able to derive absolute and relative permeabilities of an effective continuum in terms of the corresponding properties of fractures and rock matrix, respectively (Pruess et al., 1988c). We have performed effective continuum calculations for the high-level nuclear waste package problem discussed previously, and have found excellent agreement with explicit fracture calculations. To gain further insight into the validity of the effective continuum approximation, we have considered diffusivities for fluid and heat flow in the direction of fractures as well as perpendicular to them (Pruess et al., 1988b). The accuracy of the approximation was found to improve when flow processes were considered over increasingly large space and time scales. Quantitative criteria for applicable time- and distance-scales were developed and were found to be consistent with the results obtained from numerical simulations. Generally favorable conditions for an effective continuum approximation exist in systems with small fracture spacing.

## MULTIPLE POROSITY TECHNIQUES

### Multiple Interacting Continua (MINC)

For problems in fractured oil, gas, and geothermal reservoirs we have developed a ''multiple interacting continua'' technique (''MINC''; Pruess and Narasimhan, 1982, 1985; Narasimhan and Pruess, 1987), which combines features of the explicit fracture and effective continuum approaches discussed above. An extension of the double-porosity concept (Barenblatt et al., 1960; Warren and Root, 1967), the MINC approach is based on the notion that fractures have large permeability and small porosity (when averaged over a reservoir subdomain), so that fluid diffusivity in fractures is large, while the intact rock has the opposite characteristics. Therefore, any disturbance in reservoir conditions will travel rapidly through the network of interconnected fractures, while invading the matrix blocks only slowly. Based on this observation, the double-

porosity concept assumes that "global" flow in a fractured-porous medium occurs exclusively through the fractures, while the matrix blocks may exchange fluid locally with the fractures. This idea is often expressed by postulating a "sugar-cube" model for a fractured-porous reservoir, in which discontinuous matrix blocks are separated from each other by throughgoing fractures.

The crucial point in which the MINC- and double-porosity methods differ is in the nature of the matrix-fracture exchange (the so-called "interporosity flow"). The double-porosity method assumes that interporosity flow is "quasi-steady", i.e., the rate of interporosity flow is proportional to the local difference in average pressures between fractures and matrix, $p_f - p_m$. This approximation is acceptable for single-phase isothermal flow of fluids with small and constant compressibility, but it breaks down for non-isothermal and multi-phase flow, where interporosity flow may be subject to very long transients (decades) and highly non-linear mobility effects. The MINC-method treats interporosity flow in a fully transient way by computing numerical approximations to the gradients (of pressure, temperature, etc.) which drive interporosity flow at the matrix-fracture contact.

In order to resolve the gradients driving interporosity flow, it is necessary to employ a suitable discretization of the flow system. On the basis of the different response times of matrix and fractures, the MINC method assumes that the change in thermodynamic conditions in the matrix blocks is controlled by the distance from the nearest fracture. Therefore, matrix blocks are discretized into a sequence of nested volume elements which are defined on the basis of distance from the fractures, as schematically shown in Figure 4. In response to an imposed disturbance in the fracture system (e.g. a pressure drop from opening of wells, a change in water and oil saturations from waterflooding, a temperature change from water or steam injection), fluid and/or heat can migrate in the matrix blocks outward towards the fractures, or inward away from the fractures. Thus, interporosity flow is approximated as being one-dimensional. When only two continua are defined the MINC-method reduces to the conventional double-porosity approach.

Special care must be taken when considering flow in fractured partially saturated zones in arid environments, where strong phase separation effects may restrict global liquid flow to the tight rock matrix, with global gas phase flow taking place in the interconnected fractures (Wang and Narasimhan, 1985). The MINC-approach is capable of handling such flow systems with different global flow geometry for different phases (Pruess, 1985). We mention in passing that the concept of partitioning the rock matrix into sub-continua based on the distance from the (nearest) fractures is not limited to regularly-shaped matrix blocks. It can be just as easily applied to irregular fracture distributions (Pruess and Karasaki, 1982).

Most of the applications of the MINC method to date have been made for geothermal reservoir engineering studies, including fundamental studies of vapor-dominated systems, injection of waste fluids, and heat extraction. The method has also been applied to the study of water and steam flooding of petroleum reservoirs, and to moisture migration and chemical transport in high-level nuclear waste isolation. References to applications are given in a recent review (Narasimhan and Pruess, 1987).

## Semi-Analytical Interporosity Flow

The MINC method offers a very flexible approach for modeling fully transient interporosity flow in highly non-linear systems. The price for this flexibility is a significant (typically fivefold) increase in computational work compared to porous medium models. However, it was recently shown by Pruess and Wu (1988) that for a special class of problems with constant diffusivity in the matrix blocks the MINC concept can be implemented by a semi-analytical technique without any additional discretization.

The semi-analytical approach borrows from a technique developed by Vinsome and Westerveld (1980) for calculating heat exchange with impermeable confining beds during thermal oil recovery. Noting that heat conduction tends to dampen out temperature variations at the boundary, Vinsome and Westerveld suggested that cap- and

base-rock temperatures would vary smoothly even for strong and rapid temperature changes at the boundary of the conductive zone. Arguing further that heat conduction perpendicular to the conductive boundary is more important than parallel to it, they proposed to represent the temperature profile in a conductive layer by means of a simple trial function, as follows:

$$T(x,t) - T_i = (T_f - T_i + px + qx^2)\exp(-x/d) \tag{1}$$

Here x is the distance from the boundary, $T_i$ is initial temperature in cap- and base-rock (assumed uniform), $T_f$ is the time-varying temperature at cap- or base-rock boundary, p and q are time-varying fit-parameters, and d is the penetration depth for heat conduction, defined by

$$d=\sqrt{\kappa t}/2 \tag{2}$$

where $\kappa = K/\rho\, c$ is the thermal diffusivity, with K the heat conductivity, $\rho$ the density of the medium, and c the specific heat, t is time. Vinsome and Westerveld showed how this representation of conductive boundaries can be incorporated into a finite-difference reservoir simulator, with the fit parameters p and q being determined at each time step from the requirements of energy conservation and continuity of heat flux at the conductive boundary. We incorporated the method into our MULKOM simulator, and verified that it yielded accurate results (Pruess and Bodvarsson, 1984).

With a few simple modifications the method of Vinsome and Westerveld can be applied to model heat exchange between impermeable matrix blocks and fluids sweeping past these blocks in fractures (Pruess and Wu, 1988). The same form Equation (1) is used to parametrize the temperature distribution in the matrix blocks, with x interpreted as the distance from the block surface. This corresponds to the MINC-idea that changes in thermodynamic conditions in the blocks should depend primarily on the distance from the nearest fracture. The required modifications as compared to Vinsome and Westerveld's treatment of the semi-infinite solid involve the equation of heat conduction in the matrix blocks, where flow geometry is convergent with flow area diminishing towards the block centers, and the calculation of total heat content in the blocks.

In order to evaluate the accuracy of the semi-analytical approximation we have studied a problem for which exact analytical solutions are available, namely, heat exchange with a cube of initially uniform temperature, which at time t = 0 is subjected to a step change in temperature at the surface. The parameters of the problem are given in Table 2.

Table 2. Parameters for test problem (heat exchange with unit cube).

| | |
|---|---|
| side length of cube | 1 m |
| rock density | 2650 kg/m$^3$ |
| specific heat | 1000 J/kg°C |
| heat conductivity | 2.1 W/m°C |
| initial temperature | 300°C |
| surface temperature for t > 0 | 100°C |

The heat flow rate at the surface of the cube was computed as function of time using the following four approaches: (1) numerical evaluation of the exact three-dimensional Fourier series solution (Carslaw and Jaeger, 1959); (2) a one-dimensional approximation to heat flow in a cube, for which the exact solution is identical to heat flow in a sphere (Carslaw and Jaeger, 1959); (3) the semi-analytical solution as developed above, incorporated into the MULKOM simulator; and (4) method of multiple interacting continua (''MINC''; Pruess and Narasimhan, 1985). Results are given in Tables 3 and 4.

The ''exact 3-D'' and the ''exact 1-D'' results are virtually identical, with the exception of very early and very late times, which have little significance for overall heat transfer. Heat flow rates calculated in the semi-analytical approximation agree very well with the exact results, being typically 1-2 % larger. Cumulative heat transfer in the semi-analytical approximation is underpredicted by typically 10% at most times, but it approaches the correct asymptotic value of $5.3 \times 10^8$J at late times. It may appear inconsistent that heat flow rates in the semi-analytical approximation are

Table 3. Heat flow rates from unit cube.

| Time (s) | Heat Flow Rate (W) | | | |
|---|---|---|---|---|
| | exact 3-D | exact 1-D | semi-analytical | MINC |
| 1 | 1.410E6 | 1.592E6 | 1.821E6 | 1.315E6 |
| 10 | 4.987E5 | 5.000E5 | 5.038E5 | 6.122E5 |
| $10^2$ | 1.534E5 | 1.547E5 | 1.546E5 | 1.683E5 |
| $10^3$ | 4.429E4 | 4.547E4 | 4.514E4 | 4.913E4 |
| $10^4$ | 1.020E4 | 1.093E4 | 1.063E4 | 1.207E4 |
| $10^5$ | 6.354E2 | 4.414E2 | 9.478E2 | 8.372E2 |
| $10^6$ | 4.275E-7 | 2.610E-10 | 1.021E1 | 5.676E-2 |

Table 4. Cumulative heat flows from unit cube.

| Time (s) | Cumulative Conductive Heat Transfer (MJ) | | | |
|---|---|---|---|---|
| | exact 3-D | exact 1-D | semi-analytical | MINC |
| 1 | 3.285 | 3.286 | 2.645 | 1.22 |
| 10 | 10.04 | 10.05 | 9.079 | 8.52 |
| $10^2$ | 31.31 | 31.44 | 28.40 | 30.28 |
| $10^3$ | 94.73 | 95.97 | 86.09 | 93.52 |
| $10^4$ | 259.6 | 269.0 | 235.7 | 261.8 |
| $10^5$ | 503.0 | 515.9 | 453.9 | 503.3 |
| $10^6$ | 530.0 | 530.0 | 524.9 | 529.9 |

slightly on the high side at all times while cumulative heat transfer is somewhat low. This effect is caused by the time discretization: In the semi-analytical approach the heat flow rate is constant during each time step; moreover, in our fully implicit scheme it is equal to the heat flow rate at the end of the time step. Because heat flow rates are monotonically declining this leads to some underprediction of cumulative heat transfer. The accuracy of the semi-analytical calculation could be improved by taking smaller time steps (we used 4 time steps per log-cycle), or by using a mid-point weighting in time (Crank-Nicolson equation; Peaceman, 1977) rather than a fully implicit treatment.

However, in practical problems one is seldom interested in accurate answers over many orders of magnitude in time, so that time steps do not need to grow as fast as in our test case, and better time truncation accuracy will be attainable.

We have also tested the semi-analytical approximation to interporosity flow for a reservoir flow problem. For a five-spot geothermal production-injection problem predicted total heat transfer from the impermeable rocks to the fluids agreed to better than 1% with a full MINC calculation, which is a substantially better agreement than might have been expected on the basis of the individual block flow studies. It had been observed previously that the aggregate response of many matrix blocks in a reservoir flow problem tends to compensate for inaccuracies that may be present in the modeling of individual block response (Wu and Pruess, 1988). To see how this comes about, suppose that because of inaccurate representation of interporosity flow the blocks near the (cold) injection well do not deliver heat to the fluids as rapidly as they should. As a consequence, fluids will have lower temperature when at later time they sweep past downstream blocks, and hence will pick up more heat from those blocks. This indicates that satisfactory accuracy in reservoir flow problems should be attainable with rather modest accuracy requirements for individual blocks.

The semi-analytical approach to interporosity flow should also be applicable to chemical transport in fractured media, and to isothermal single-phase flow with permeable blocks, because both these problems involve constant diffusivity in the rock matrix and can be described in analogy to heat conduction. Work along these lines is in progress.

## CONCLUDING REMARKS

Despite significant advances in recent years, modeling of multiphase flow in fractured media remains a difficult subject. Important effects such as porosity and permeability change from chemical dissolution and precipitation or from variations in pore

pressures and rock stresses have not been adequately explored. There is a lack of fundamental data on multi-phase flow characteristics (relative permeabilities and capillary pressures) of "real" rough-walled fractures. Our ability to model specific fractured flow systems is limited by difficulties in adequately characterizing such systems over a wide range of spatial scales.

For flow systems with well-connected fractures the main problem for modeling is to adequately describe interporosity flow. Explicit representation of fractures as small regions of large permeability is feasible for fundamental studies of idealized problems. For practical problems the simplest approach is the effective continuum approximation, in which fractures are represented by means of suitably chosen effective hydrologic parameters. This is applicable for flow problems in which there is approximate thermodynamic equilibrium locally between matrix and fractures. On the other hand, if there is persistent disequilibrium between matrix and fractures there will be extended periods of transient interporosity flow, which can be described by means of multiple interacting continua. This will in general give rise to a substantial increase in computational work. However, for special problems with constant-diffusivity interporosity flow semi-analytical instead of numerical methods can be used, reducing the numerical effort to that of a porous medium model.

## ACKNOWLEDGMENT

The authors would like to acknowledge valuable discussions with their colleagues J. Wang, Y. Tsang and Y. S. Wu. Thanks for a critical review of the manuscript are due to Y. S. Wu and C. Doughty. This work was supported by the U. S. Department of Energy under Contract No. DE-AC03-76SF00098.

## SELECTED REFERENCES

Barenblatt, G. E., Zheltov, I. P. and Kochina, I. N., 1960, Basic concepts in the theory of seepage of homogeneous liquids in fissured rocks, *J. Appl. Math. (USSR),* v.24, no.5, p. 1286-1303.

Carslaw, H. S. and Jaeger J. C., 1959, *Conduction of Heat in Solids,* Oxford University Press, Oxford, England, Second Edition.

Duff, I. S., 1977, MA28 - A set of FORTRAN subroutines for sparse unsymmetric linear equations, AERE Harwell Report R8730, July.

Narasimhan, T. N., 1982, Multidimensional numerical simulation of fluid flow in fractured porous media, *Water Resources Research,* v.18, no.4, p. 1235-1247, August.

Narasimhan, T. N. and Pruess, K., 1987, MINC: An approach for analyzing transport in strongly heterogeneous systems, Proc. NATO Advanced Research Workshop on Advances in Analytical and Numerical Groundwater Flow and Quality Modeling, Lisbon, Portugal, June.

Narasimhan, T. N. and Witherspoon, P. A., 1976, An integrated finite difference method for analyzing fluid flow in porous media, *Water Resources Research,* v.12, no.1, p. 57-64.

Peaceman, D. W., 1977, *Fundamentals of Numerical Reservoir Simulation,* Elsevier, Amsterdam.

Pruess, K., 1985, A quantitative model of vapor dominated geothermal reservoirs as heat pipes in fractured porous rock, *Geothermal Resources Council, Transactions,* v.9, Part II, p. 353-361, August.

Pruess, K., 1987, TOUGH user's guide, Nuclear Regulatory Commission, Report NUREG/CR-4645, June.

Pruess, K., 1988, SHAFT, MULKOM, TOUGH: A set of numerical simulators for multiphase fluid and heat flow, *Geotermia, Rev. Mex. Geoenergia,* v.4, p. 185-202 (also: Lawrence Berkeley Laboratory Report LBL-24430, Berkeley, Ca., January.)

Pruess, K., and Bodvarsson, G. S., 1984, Thermal effects of reinjection in geothermal reservoirs with major vertical fractures, *Journal of Petroleum Technology,* v.36, no.10, p.1567-1578, September.

Pruess, K. and Karasaki, K., 1982, Proximity functions for modeling fluid and heat flow in reservoirs with stochastic fracture distributions, presented at Eighth Workshop on Geothermal Reservoir Engineering, Stanford University, Stanford, Ca., December.

Pruess, K. and Narasimhan, T. N., 1982, On fluid reserves and the production of superheated steam from fractured, vapor-dominated geothermal reservoirs, *Journal of Geophysical Research,* v.87, no.B11, p. 9329-9339.

Pruess, K. and Narasimhan, T. N., 1985, A practical method for modeling fluid and heat flow in fractured porous media, *Society of Petroleum Engineers Journal,* v.25, no. 1, p. 14-26, February.

Pruess, K., Tsang, Y. W., and Wang, J. S. Y., 1985, Modeling of strongly heat driven flow in partially saturated fractured porous media, International Association of Hydrogeologists (ed.), Memoires, Vol. XVII, 486-497.

Pruess, K., Wang, J. S. Y. and Tsang, Y. W., 1988a, On thermohydrological conditions near high-level nuclear wastes emplaced in partially saturated fractured tuff. Part 1. Simulation studies with explicit consideration of fracture effects, Lawrence Berkeley Laboratory Report LBL-24563, January (submitted to *Water Resources Research).*

Pruess, K., Wang, J. S. Y. and Tsang, Y. W., 1988b, On thermohydrological conditions near high-level nuclear wastes emplaced in partially saturated fractured tuff. Part 2. Effective continuum approximation, Lawrence Berkeley Laboratory Report LBL-24564, January (submitted to *Water Resources Research).*

Pruess, K., Wang, J. S. Y., and Tsang, Y. W., 1988c, Effective continuum approximation for modeling fluid and heat flow in fractured porous tuff, Sandia National Laboratories, Report SAND 86-7000, Albuquerque, NM.

Pruess, K. and Wu, Y. S., 1988, A semi-analytical method for heat sweep calculations in fractured reservoirs, presented at Thirteenth Workshop on Geothermal Reservoir Engineering, Stanford University, January 19-21 (LBL-24463).

Vinsome, P. K. W. and Westerveld, J., 1980, A simple method for predicting cap and base rock heat losses in thermal reservoir simulators, *J. Canadian Petroleum Technology,* p. 87-90, July-September.

Wang, J. S. Y. and Narasimhan, T. N., 1985, Hydrologic mechanisms governing fluid flow in a partially saturated, fractured, porous medium, *Water Resources Research,* v.21, no.12, p. 1861-1874, December.

Wang, J. S. Y. and Narasimhan, T. N., 1986, Hydrological mechanisms governing fluid flow in fractured welded units and porous non-welded units at Yucca Mountain, Lawrence Berkeley Laboratory, Report LBL-21022.

Warren, J. E. and Root, P. J., 1963, The behavior of naturally fractured reservoirs, *Soc. Pet. Eng. J.,* p. 245-255, September; *Transactions, AIME,* 228.

Wu, Y. S. and Pruess, K., 1988, A multiple-porosity method for simulation of naturally fractured petroleum reservoirs, *SPE Reservoir Engineering,* pp. 327-336, February.

Zimmerman, R. M. and Blanford, M. L., 1986, Expected thermal and hydrothermal environments for waste emplacement holes based on G-tunnel heater experiments, Proc. 27th U. S. Symposium on Rock Mechanics, 874-882, University of Alabama, June.

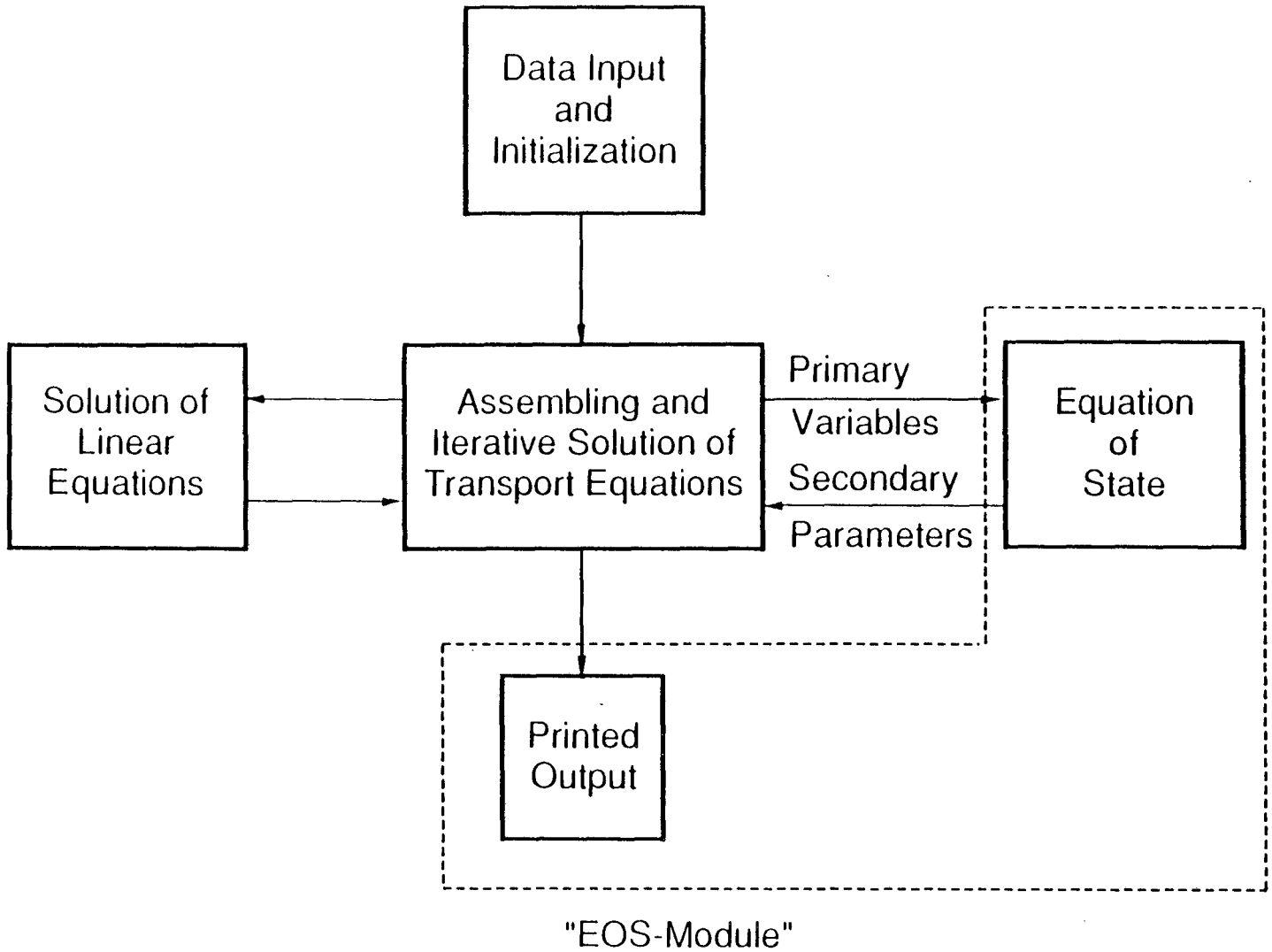


XBL 8712-10492

Figure 1. Modular architecture of MULKOM.

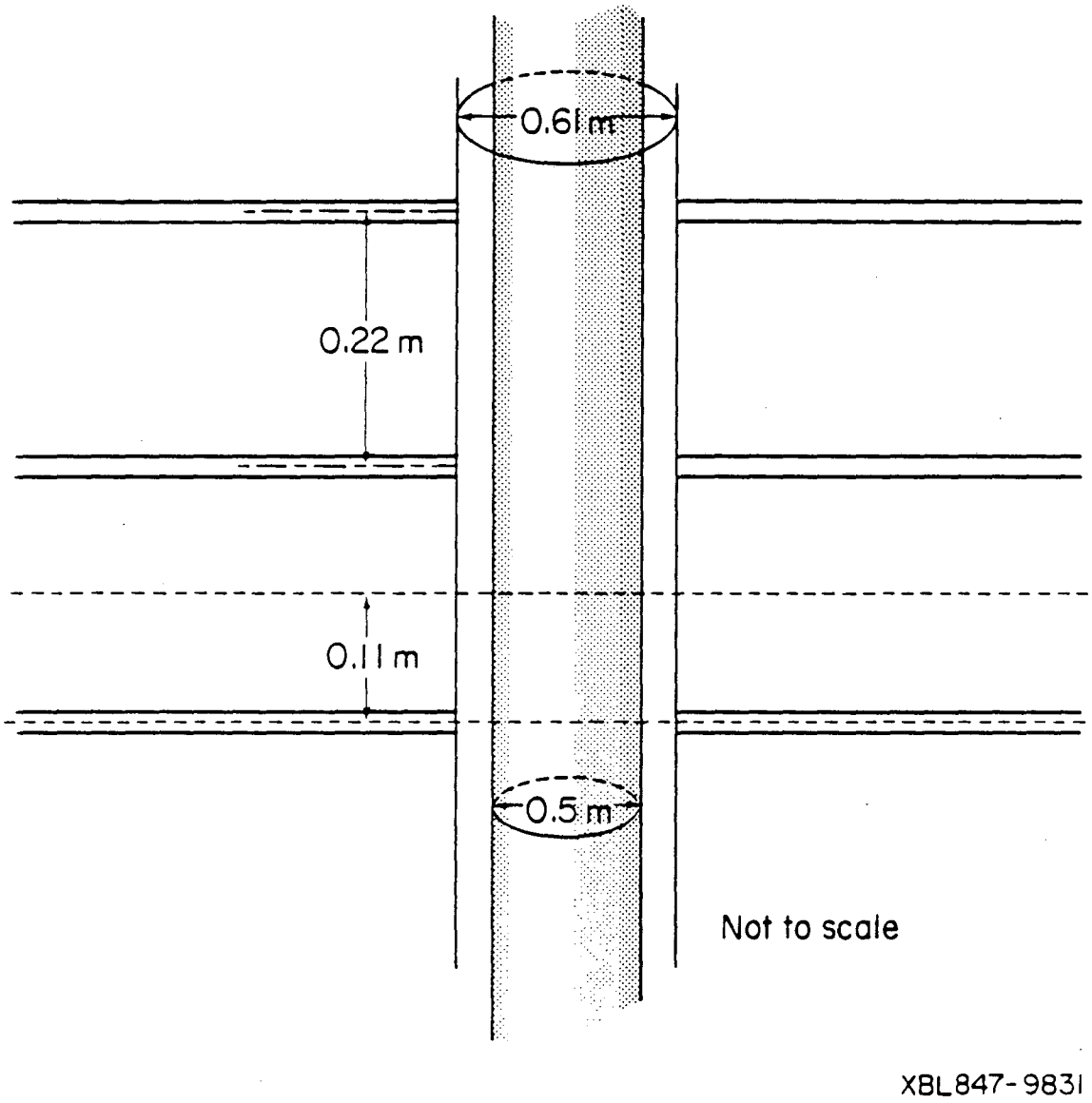


Figure 2. Idealized geometry with explicit fractures for simulation of flow near high-level nuclear waste packages.

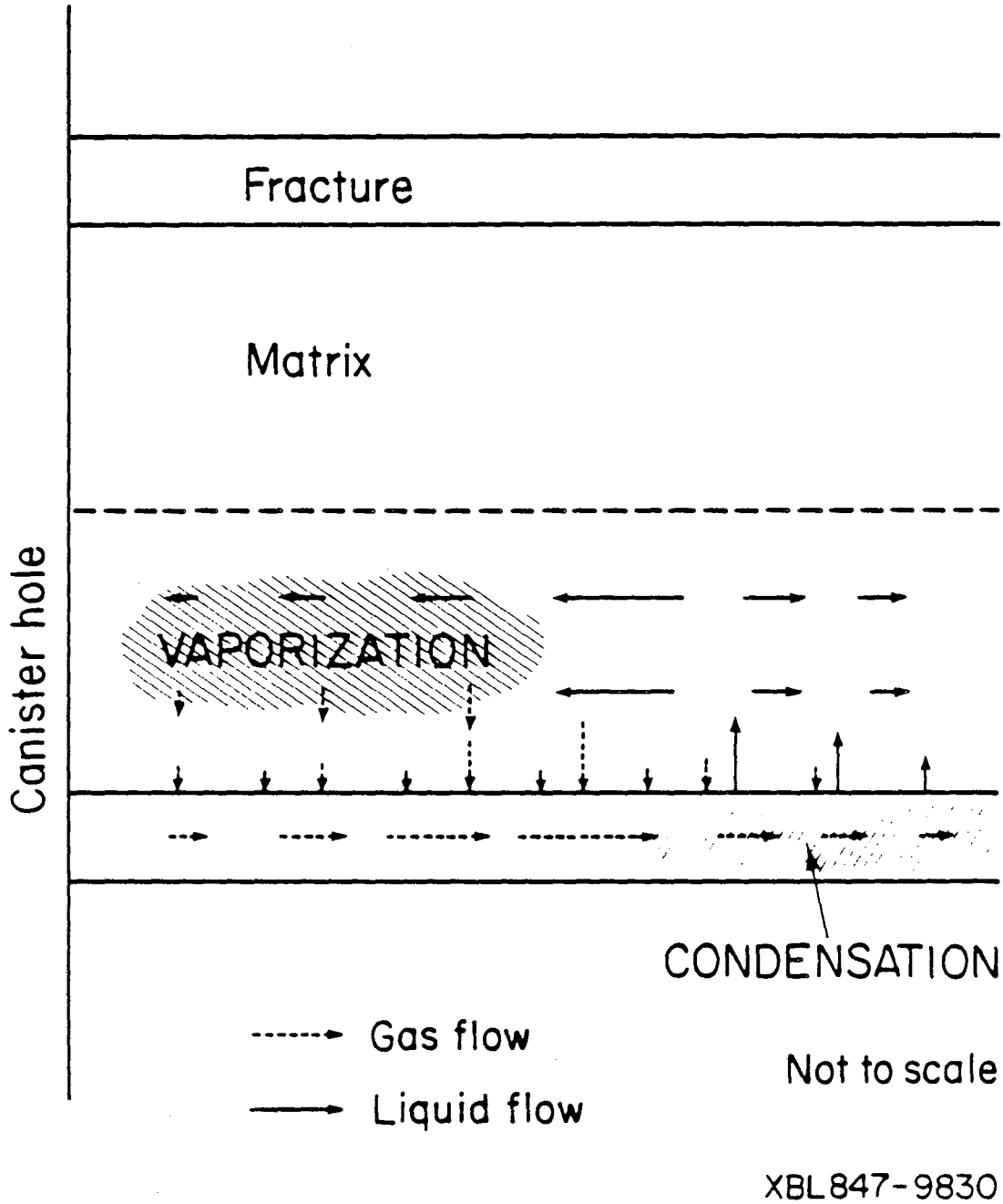


Figure 3. Schematic of thermohydrologic phenomena near a string of high-level nuclear waste packages emplaced in an unsaturated porous medium.

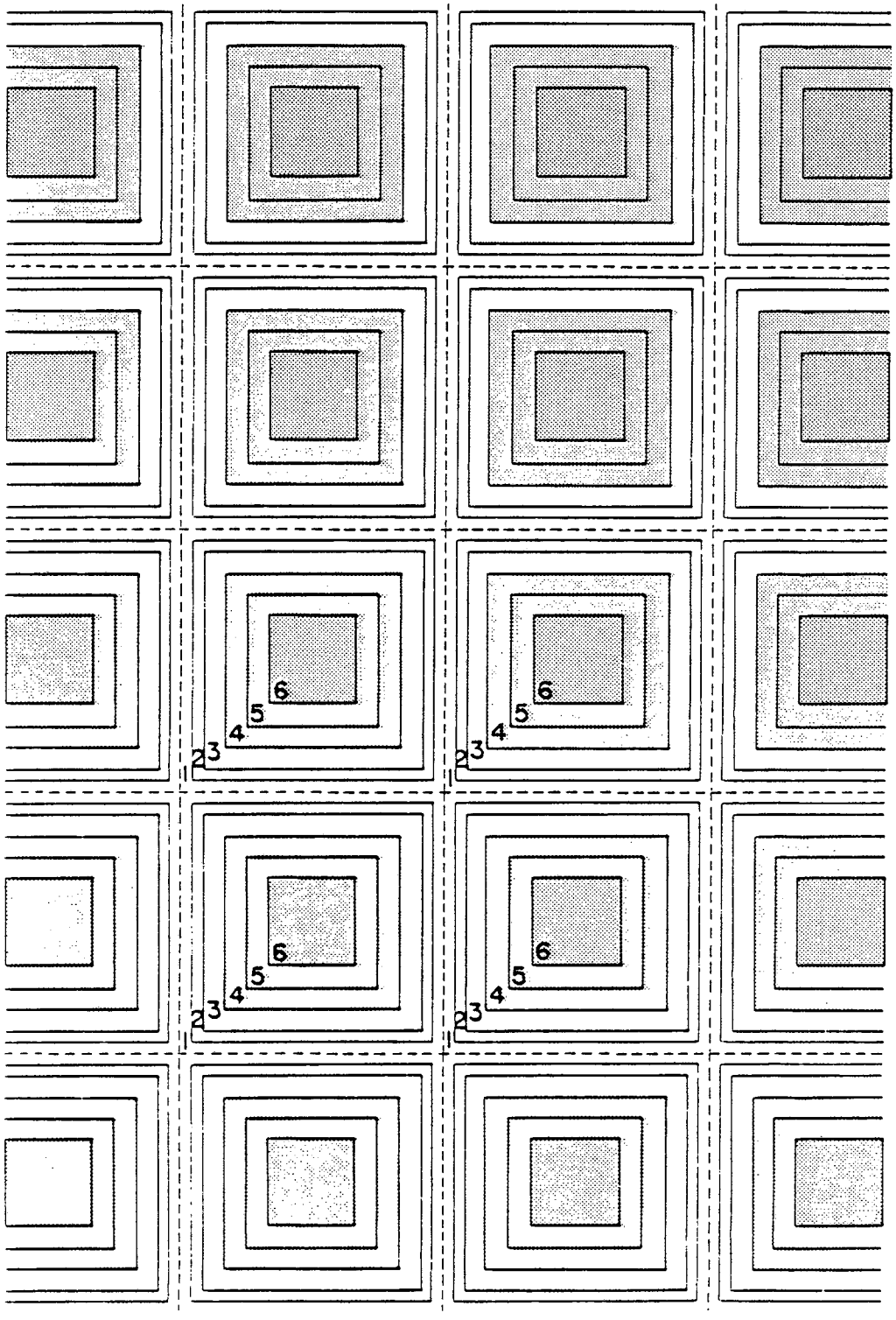


XBL 813-2753

Figure 4. Areal view of an idealized double-porosity system, consisting of vertical rock columns separated by fractures. MINC-discretization into six continua is also shown.

*LAWRENCE BERKELEY LABORATORY*
*OFFICE FOR PLANNING AND DEVELOPMENT*
*UNIVERSITY OF CALIFORNIA*
*BERKELEY, CALIFORNIA 94720*