LBL-2587 c.2
UC-37 Instruments
TID-4500-R61

A 1000°C TILTABLE SPECIMEN HOLDER FOR THE 650 kV HITACHI MICROSCOPE

William Worthington, Robert Sinclair and Gareth Thomas

LAWRENCE
RADIATION LABORATORY
LIBRARY AND
DOCUMENTS SECTION

March 1974

Prepared for the U. S. Atomic Energy Commission
under Contract W-7405-ENG-48

TWO-WEEK LOAN COPY

This is a Library Circulating Copy which may be borrowed for two weeks. For a personal retention copy, call Tech. Info. Division, Ext. 5545

LAWRENCE BERKELEY LABORATORY
UNIVERSITY OF CALIFORNIA
31

LBL-2587 c.2

DISCLAIMER

This document was prepared as an account of work sponsored by the United States Government. While this document is believed to contain correct information, neither the United States Government nor any agency thereof, nor the Regents of the University of California, nor any of their employees, makes any warranty, express or implied, or assumes any legal responsibility for the accuracy, completeness, or usefulness of any information, apparatus, product, or process disclosed, or represents that its use would not infringe privately owned rights. Reference herein to any specific commercial product, process, or service by its trade name, trademark, manufacturer, or otherwise, does not necessarily constitute or imply its endorsement, recommendation, or favoring by the United States Government or any agency thereof, or the Regents of the University of California. The views and opinions of authors expressed herein do not necessarily state or reflect those of the United States Government or any agency thereof or the Regents of the University of California.

A 1000°C TILTABLE SPECIMEN HOLDER FOR THE 650 kV HITACHI MICROSCOPE

William Worthington,* Robert Sinclair† and Gareth Thomas**

Inorganic Materials Research Division, Lawrence Berkeley Laboratory
University of California, Berkeley, California

A new 1000°C specimen holder has been developed for the HU-650 electron microscope and is interchangeable with other holders of the recently designed and installed Orthogonal Drive Tilting Stage.[1] (Fig. 1)

The success of the Orthogonal Drive Tilting Stage set metallurgical researchers to inquire about the possibility of incorporating facilities for high temperature work into this design or a design very similar. The requirements for a high temperature device were drawn up and are as follows:

1. To be an Orthogonal Drive Tilting Stage type of motion system with all original design criteria maintained.[1]

2. Be capable of heating standard (3 mm diam.) metallurgical specimens to 1000°C.

3. Geometry and materials should be such that stage and microscope components shall not be damaged by heat from the specimen holder.

4. The electric current to the heating element shall impart a minimum effect upon the microscope electron beam.

The Orthogonal Drive Tilting Stage for the HU-650 electron microscope lends itself to modification for high temperature work very readily. The criteria: fineness of tilt translation, tilting range required, repeatability and low maintenance are met with this design. One modification is necessary to the stage inner cone as shown in Fig. 2, Part C.

Figure 3 illustrates the modification in more detail. Three beryllium-copper contact fingers are mounted close to the top of the inner cone. These contact fingers are coupled together by a 0.020 in.-diam. gold wire. An insulated, braided copper wire is soldered to the gang of three contact fingers and is brought out of the stage area at a convenient location. The copper wire is the power lead-in wire. The stage body (ground) serves as the other power lead. The three beryllium-copper contact fingers and connecting 0.020-in. diam. gold wire are insulated from the stage inner cone by alumina (Al_2O_3). The alumina is sprayed on in a molten state (refer to page 8 for a description of this spraying process). 301E alumina powder (-400 mesh) was used giving good density and quite adequate thickness uniformity.

A special specimen holder cartridge assembly was developed. This cartridge is interchangeable with others made for the Orthogonal Drive Tilting Stage but with some unique features:

1. Electrical conductors are added to the cartridge to transmit energy to the filament winding of the high temperature specimen holder tip.

2. A special high temperature specimen holder tip with wound filament furnace was manufactured.

On the cartridge body, three longitudinal grooves and one circumferential groove (Figs. 1 and 4) are machined. Alumina is sprayed into these grooves. A gold band is fit tightly over the circumferential groove. A set of three 0.020 in. diam. wires are spot-welded to beryllium-copper contact fingers and sprayed with alumina. These gold

wire/beryllium-copper contact finger assemblies are individually spot-welded to the circumferential gold band and carefully laid into the longitudinal grooves. Miniature screws secure the contact fingers to the cartridge body. A final coating of alumina is sprayed over the longitudinal grooves implaiting the gold wires and upper ends of the contact fingers. The main body of the cartridge is thence complete.

In designing the special high temperature specimen holder tips various materials were experimented with. One of the "tip" assemblies has a platinum body with a 0.003 in. diam. tungsten wire filament winding. The first layer of tungsten wire is wound clockwise over a thin layer of alumina (sprayed on). Another layer of alumina is sprayed over the first layer of filament windings. A second layer of filament windings is wound counterclockwise over the insulated first layer and then sprayed with alumina. One end of the tungsten filament winding is spot-welded to the platinum body (prior to the winding and spraying). The other end of the tungsten filament winding is spot-welded to a platinum band (Fig. 4). The platinum band serves to couple the filament winding to the electric current via the three beryllium-copper contact fingers of the cartridge body. The exterior of the high temperature specimen holder tip is threaded (6 mm × 0.5 mm). This external thread allows adjustment of the elevation of the specimen with respect to the electron microscope beam focus point and/or the gymbal axes of the Orthogonal Drive Tilting Stage. As this elevation adjustment is made the platinum band acts much like a slip-ring. The platinum band remains in contact with the beryllium-copper contact fingers through the 1 mm of allowable elevation adjustment. Since the specimen holder

cartridge assembly is removable (through airlock) from the microscope at any time during the course of specimen observations, elevation adjustments can be made if necessary, at these times.

A specimen hold-down plate and cap (Figs. 1 and 4) were manufactured of tantalum.

A second high temperature specimen holder tip assembly was manufactured. The body of the assembly is molybdenum. The filament winding material is 0.003 in. diam. tantalum. All other features are the same.

Heating characteristics of the two "tip" assemblies are illustrated graphically on pages 5 and 6.

Evaluation of the high temperature specimen holder assembly to date, indicates that it is operating well. Temperatures approaching 1000°C have been held for several hours and the full range of temperatures have been used with excellent repeatability. The need for refinements will be determined as the evaluation with use continues. Exploitation of the interchangeable "tip" design will allow researchers to have their own "tip" assemblies with, perhaps, features quite different than the original design.

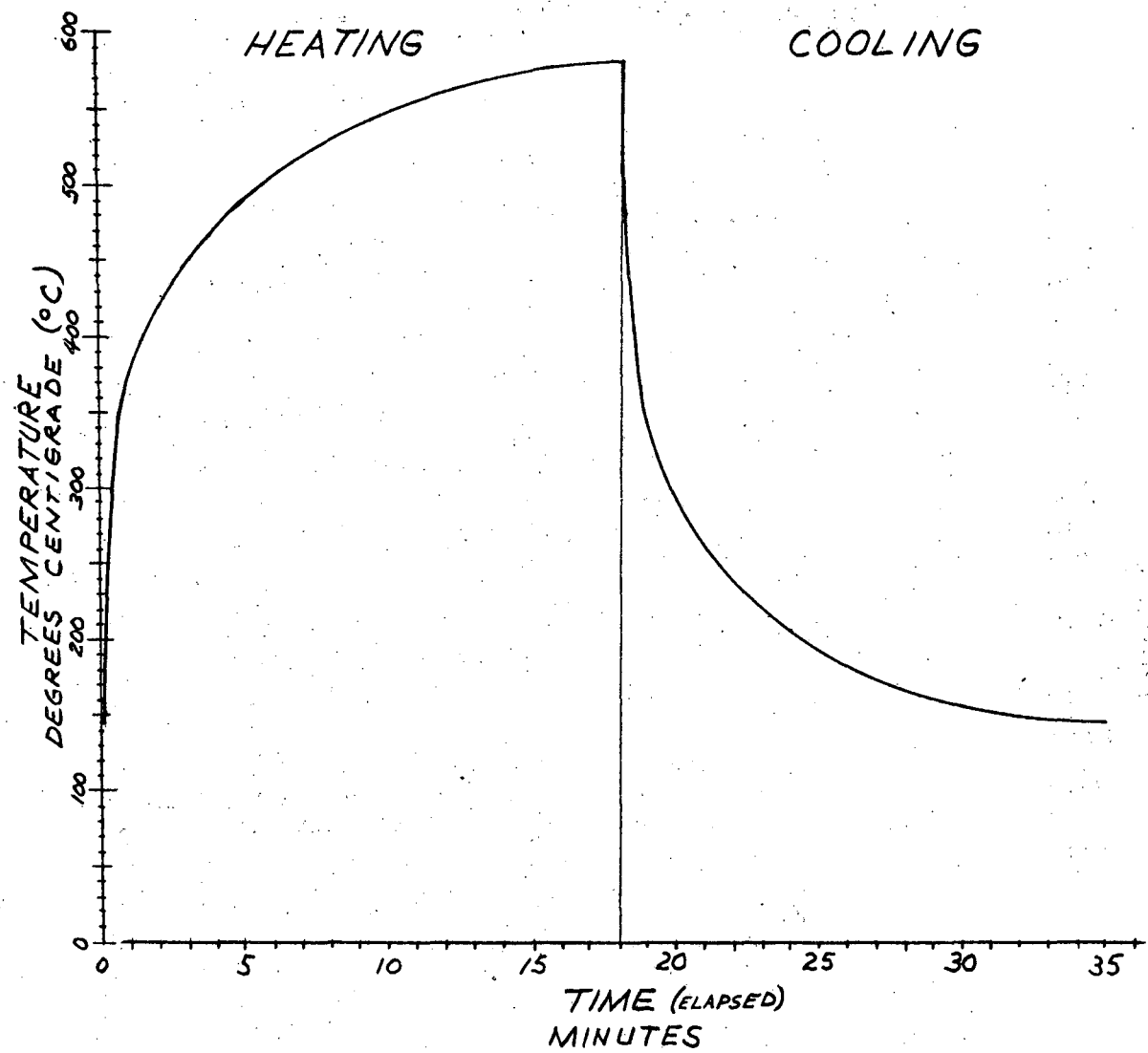
HEATING
COOLING
TEMPERATURE
DEGREES CENTIGRADE (°C)
0
100
200
300
400
500
600
0
5
10
15
20
25
30
35
TIME (ELAPSED)
MINUTES

XBL 743-5791

CALIBRATION CURVES
FOR
HEATABLE SPECIMEN TIP ASSEMBLIES
POWER INPUT VS. TEMPERATURE

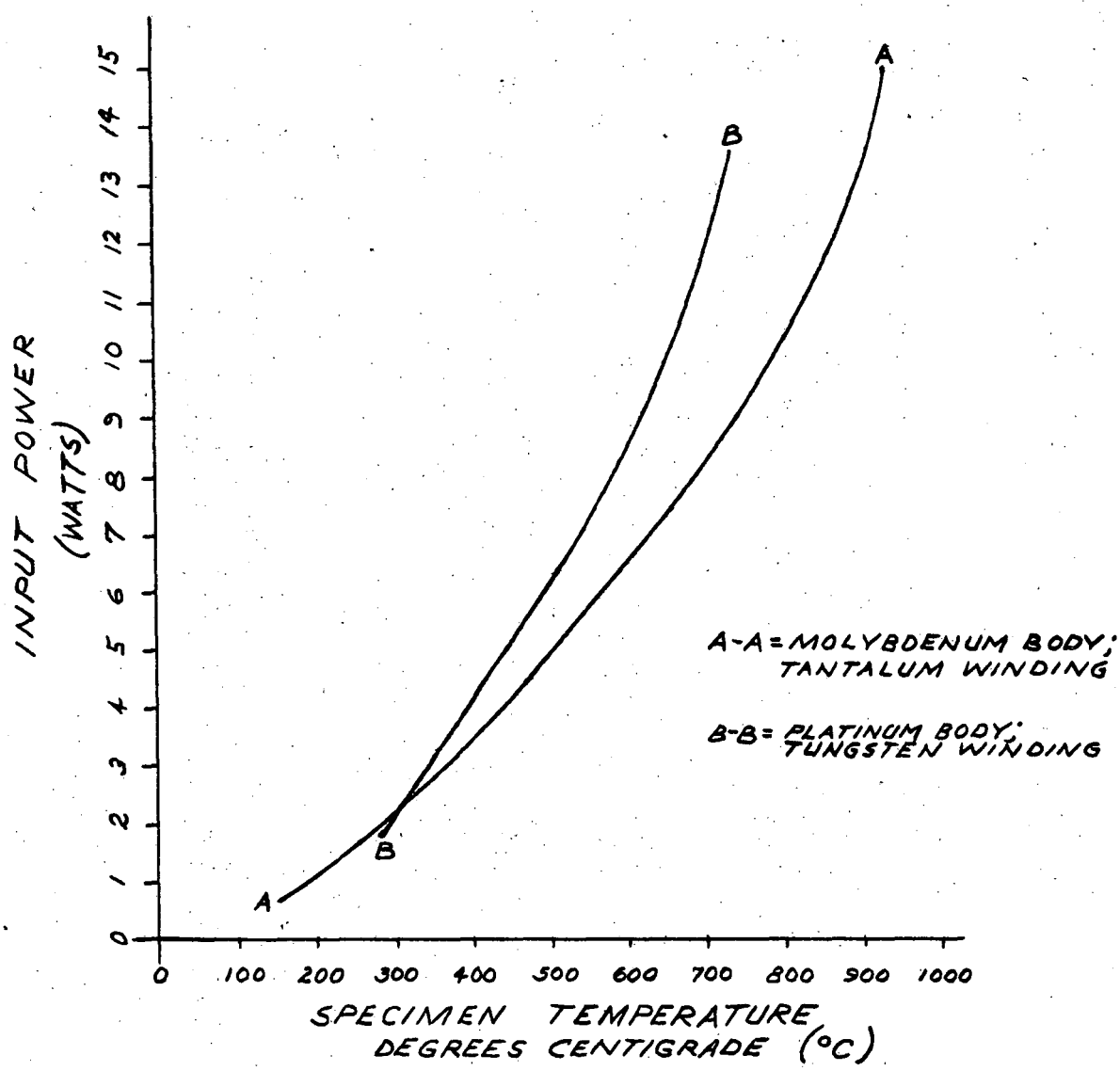

XBL 743-5789

Acknowledgements

The authors wish to thank the technicians, staff and graduate students for their invaluable advice and assistance in this project. This work was primarily sponsored through a grant from the National Science Foundation and in part by the U. S. Atomic Energy Commission.

ALUMINA SPRAYING

Two plasma-type spraying machines were experimented with in the early stages of this project. They are:

1. The Plasmatron Co. (Subsidiary of Goetel, Inc.) plasma spray machine.
2. The BLH Electronics, Inc. (Subsidiary of Baldwin, Lima and Hamilton Corp.) Rokide Ceramic Spray machine.

The machines operate by the same principle essentially. An atomizing flame within the body of a special gun melts, in this case alumina, and blows the molten particles against a properly prepared surface where they solidify.

Best results were obtained with the Plasmatron Co. machine using their 301 E type alumina powder.

Footnotes and References

*Technical Specialist, Mechanical Technicians Department, Lawrence Berkeley Laboratory

†National Science Foundation Fellow

**Professor, Department of Materials Science and Engineering, College of Engineering, University of California, Berkeley.

1. J. C. Hodges and G. Thomas, An Orthogonal Drive Tilting Stage for the Hitachi 650 kV Electron Microscope, LBL-145, Sept. 1971, pp. 1-6.

Figure Captions

Fig. 1. Exploded view of the High Temperature Specimen Holder and Tip Assembly.

Fig. 2. Orthogonal Drive Tilting Stage with High Temperature Modification.

Fig. 3. Inner Cone of the Orthogonal Drive Tilting Stage with High Temperature Modification .

Fig. 4. Partial Section of the High Temperature Specimen Holder and Tip Assembly.

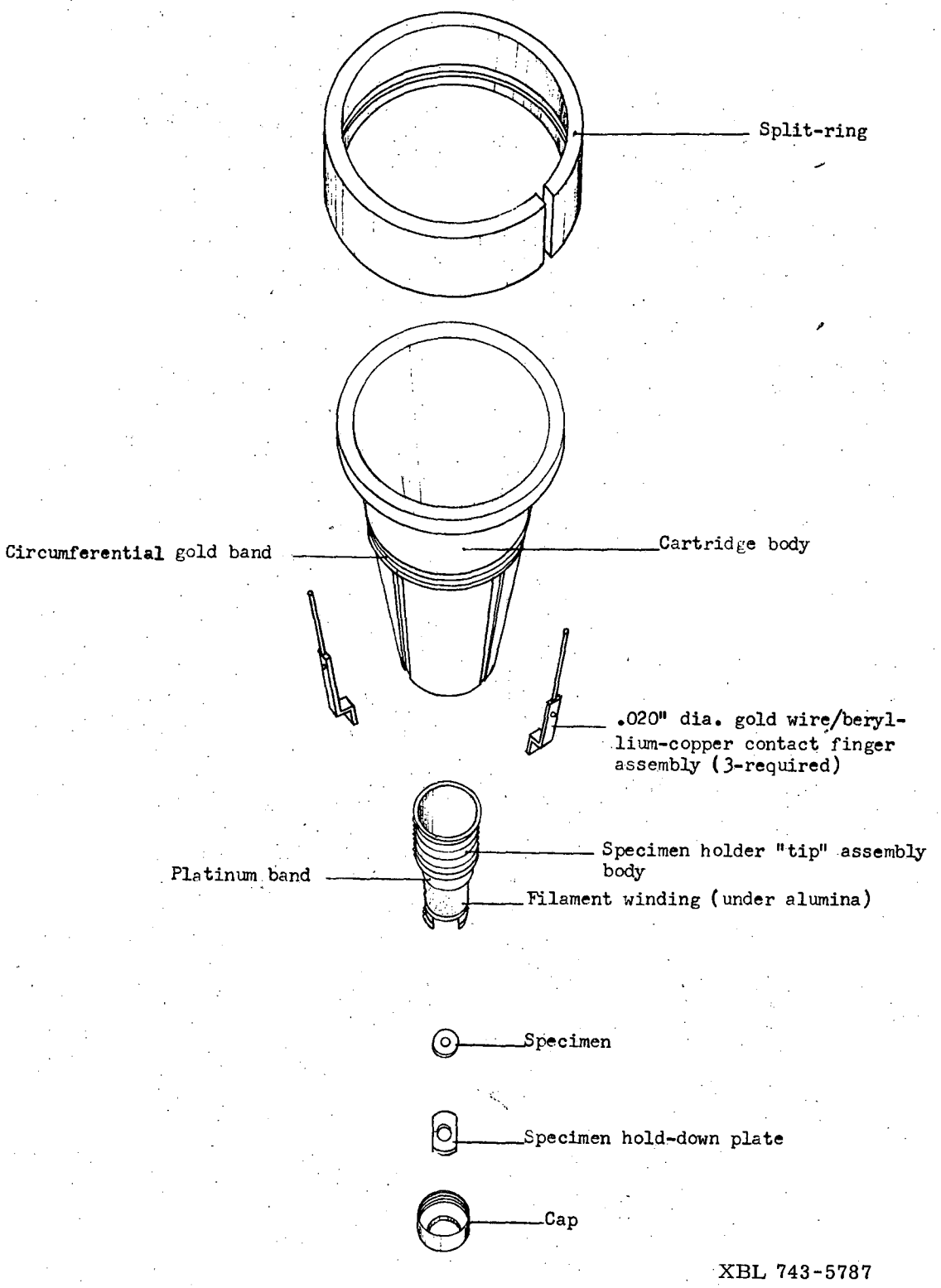
Split-ring
Circumferential gold band
Cartridge body
.020" dia. gold wire/beryl-
lium-copper contact finger
assembly (3-required)
Specimen holder "tip" assembly
body
Platinum band
Filament winding (under alumina)
Specimen
Specimen hold-down plate
Cap
XBL 743-5787

Fig. 1

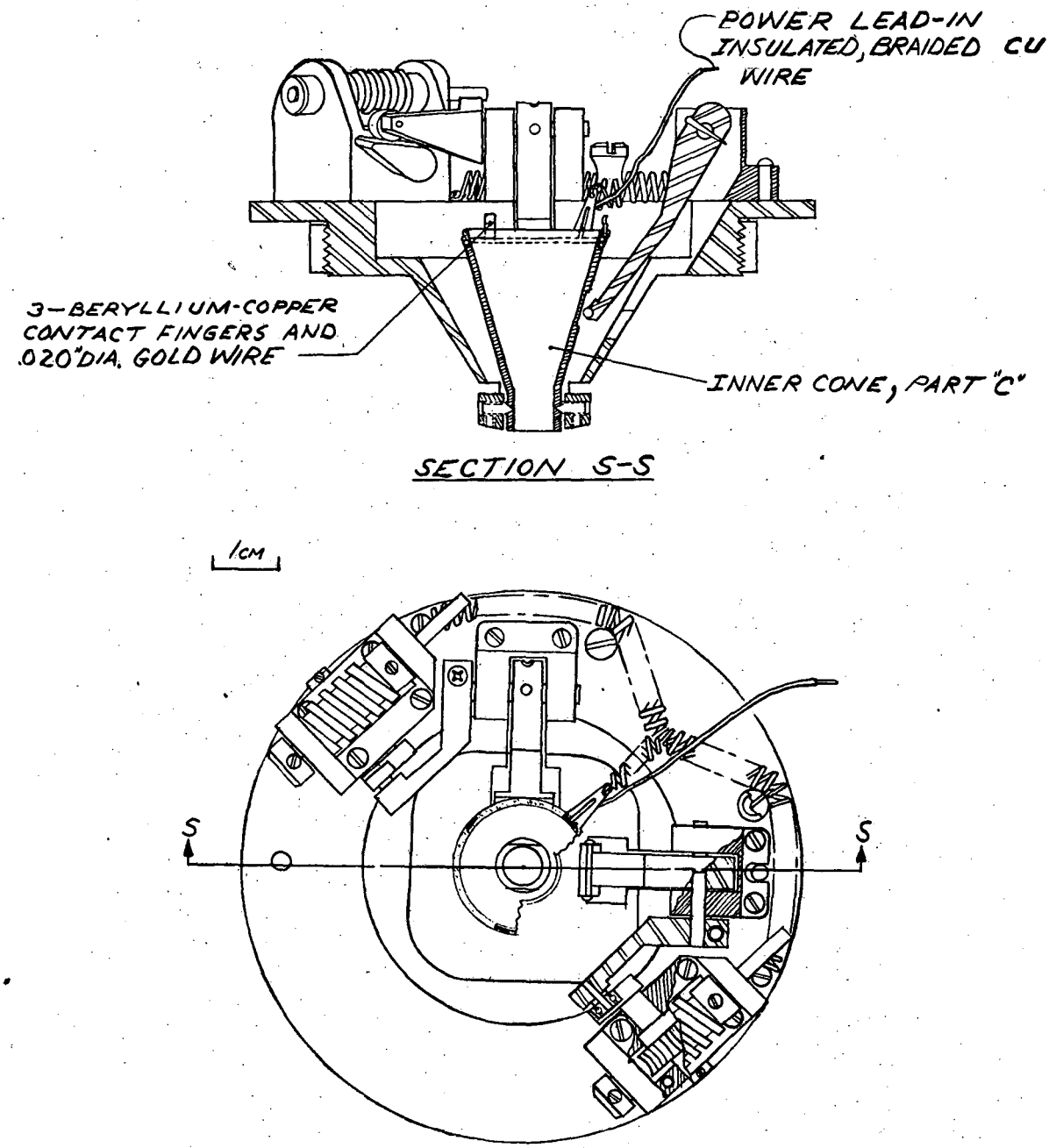

XBL 743-5790

Fig. 2

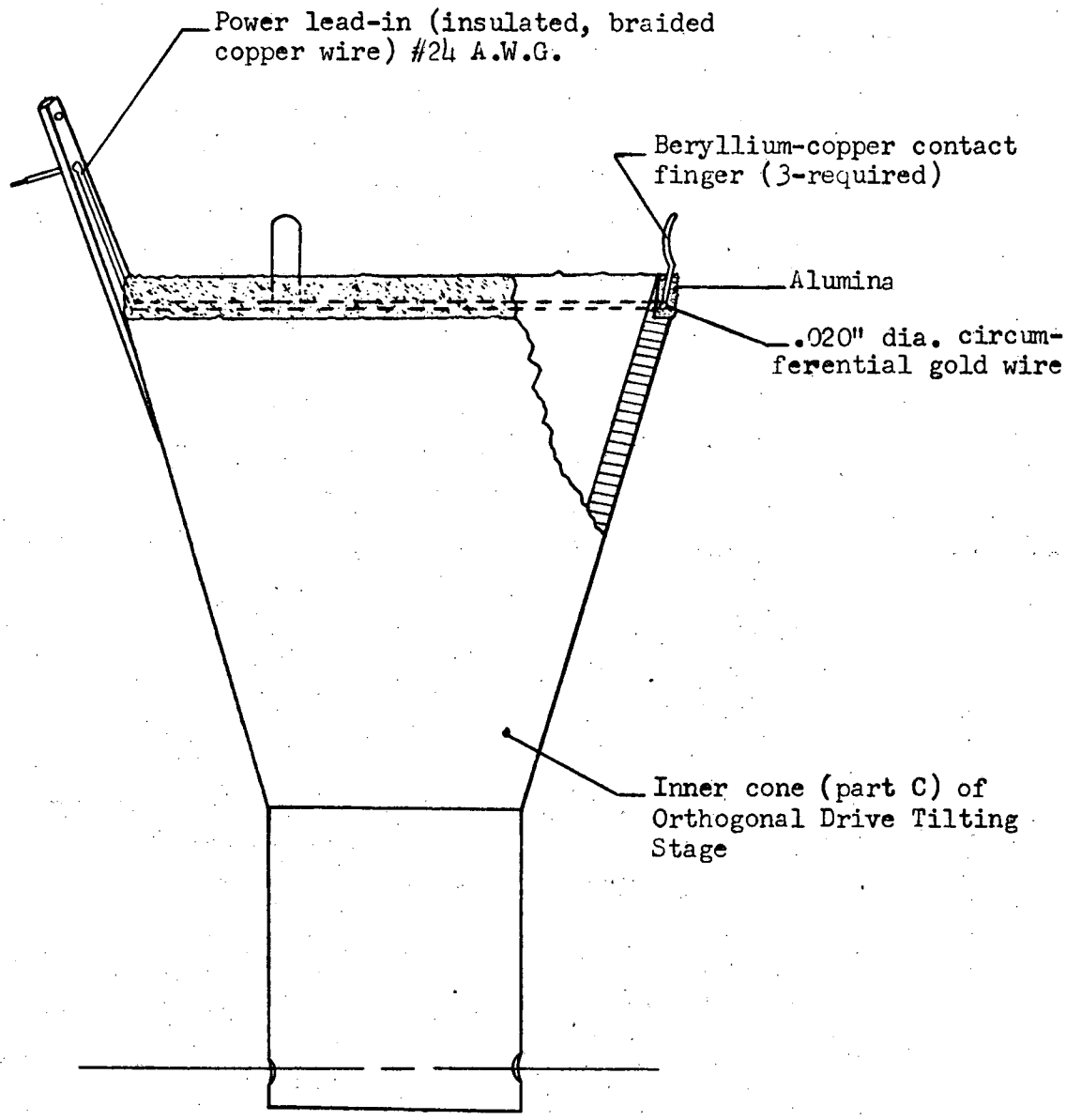

XBL 743-5788

Fig. 3

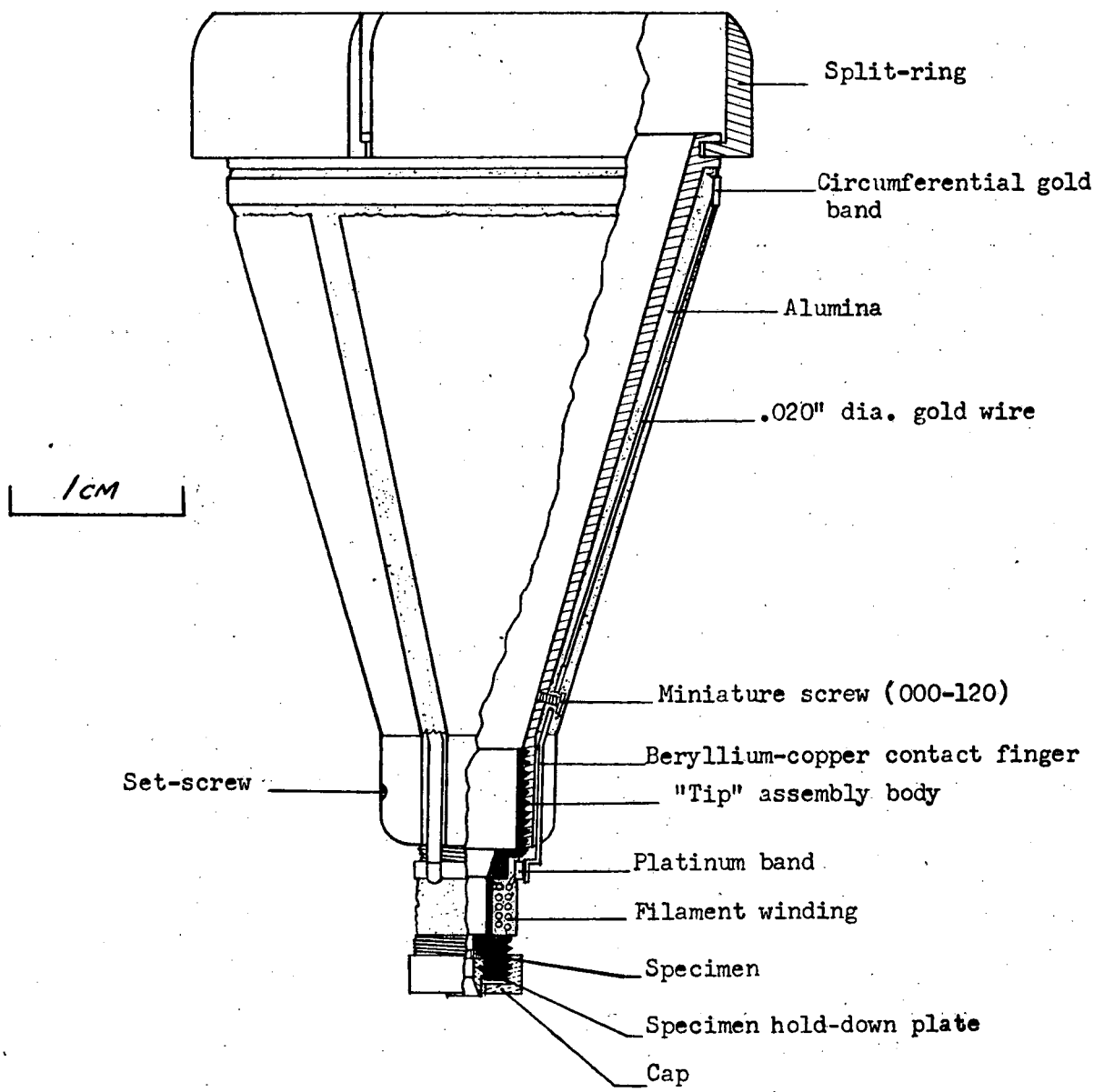

XBL 743-5786

Fig. 4

LEGAL NOTICE

This report was prepared as an account of work sponsored by the United States Government. Neither the United States nor the United States Atomic Energy Commission, nor any of their employees, nor any of their contractors, subcontractors, or their employees, makes any warranty, express or implied, or assumes any legal liability or responsibility for the accuracy, completeness or usefulness of any information, apparatus, product or process disclosed, or represents that its use would not infringe privately owned rights.

TECHNICAL INFORMATION DIVISION
LAWRENCE BERKELEY LABORATORY
UNIVERSITY OF CALIFORNIA
BERKELEY, CALIFORNIA 94720