LBL-25890 c.2

Lawrence Berkeley Laboratory
UNIVERSITY OF CALIFORNIA

Accelerator & Fusion Research Division

Presented at the 1989 IEEE Particle Accelerator Conference, Chicago, IL, March 20–23, 1989, and to be published in the Proceedings

RECEIVED
LAWRENCE
BERKELEY LABORATORY

APR 17 1989

LIBRARY AND
DOCUMENTS SECTION

Design of an Integrally Formed RFQ

S. Abbott, R. Caylor, R. Gough, D. Howard,
R. MacGill, and J. Staples

March 1989

TWO-WEEK LOAN COPY

This is a Library Circulating Copy which may be borrowed for two weeks.

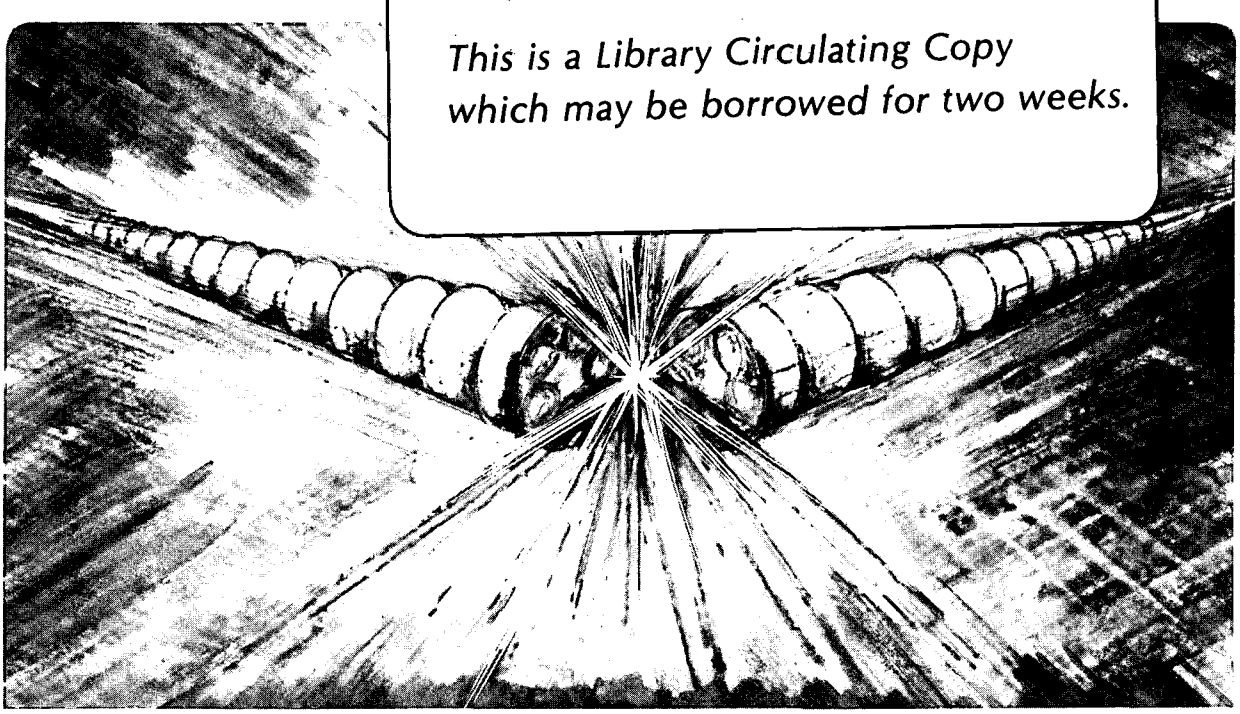

LBL-25890 c.2

Prepared for the U.S. Department of Energy under Contract Number DE-AC03-76SF00098.

DISCLAIMER

This document was prepared as an account of work sponsored by the United States Government. While this document is believed to contain correct information, neither the United States Government nor any agency thereof, nor the Regents of the University of California, nor any of their employees, makes any warranty, express or implied, or assumes any legal responsibility for the accuracy, completeness, or usefulness of any information, apparatus, product, or process disclosed, or represents that its use would not infringe privately owned rights. Reference herein to any specific commercial product, process, or service by its trade name, trademark, manufacturer, or otherwise, does not necessarily constitute or imply its endorsement, recommendation, or favoring by the United States Government or any agency thereof, or the Regents of the University of California. The views and opinions of authors expressed herein do not necessarily state or reflect those of the United States Government or any agency thereof or the Regents of the University of California.

DESIGN OF AN INTEGRALLY FORMED RFQ*

S. Abbott, R. Caylor, R. Gough, D. Howard, R. MacGill, and J. Staples
Lawrence Berkeley Laboratory
University of California
Berkeley, California 94720

Summary

The design, construction and testing of a 410 MHz RFQ utilizing a new mechanical design concept has been completed at LBL. The RFQ is planned to be used at the Bevatron for injecting protons into the present heavy ion linac. The integral vane-cavity construction is a significant and unique feature of this RFQ design, wherein four walls with integral vanes are assembled to form the RFQ geometry. This design concept provides the capability of achieving precision vane alignment in minimal assembly time with no adjustments required. The design concept including material selection, plating, vacuum seal design, assembly and testing are described.

Introduction

Research and development of RFQs at LBL have been directed towards new beam dynamics solutions and the engineering and design of a new resonant structure. The focus of this paper is on the development and applications of a new RFQ utilizing a resonant structure which is a unique and significant departure from the RFQs previously designed and built at LBL. (Patent proceedings regarding this new concept are presently underway[1].) Construction of a one meter long prototype was initiated to confirm the machining accuracy, plating, assembly techniques and vacuum integrity of this new design. The one meter length was chosen since this was the maximum length compatible with LBL existing acid copper plating facilities. However, the goals of this prototype were expanded when it was discovered that it could be constructed with the proper vane tip geometry and resonant frequency to satisfactorily accelerate protons as part of a proposed modification to the Bevatron Local Injector. The proposed proton source and RFQ for the Local Injector at the Bevatron would supplement the existing Duoplasmatron and PIG sources. It would provide the capability in conjunction with the Local Injector's DTL, for injecting 20 MeV protons into the Bevatron. This solution for proton injection, which utilizes the new RFQ design, will serve to expand the nuclear science experimental capabilities at the Bevatron by providing experimenters with high intensity protons. Table 1 shows the parameters for the RFQ proton accelerator at the Bevatron Local Injector.

Design Description

Figure 1 shows a typical cross section of the RFQ. This structure incorporates each of the vanes as an integral part of the cavity walls. Each vane was machined from a solid aluminum plate with the precision engagement surfaces and the vane tips machined in the same set-up to assure accurate positioning of the vane tips. The precise location of the vane tips, therefore, depends exclusively on the accuracy of the machine tool used to generate the four vanes.

*This work was supported by the Director, Office of Energy Research, Office of High Energy and Nuclear Physics, Nuclear Physics Division, Office of Management and Administration, of the U.S. Department of Energy under Contract Nº DE-AC03-76SF00098

Table 1
RFQ Parameters

Structure	Four vane, loop driven
Ion	proton
Frequency	410 MHz
Input energy	40 keV
Output energy	800 keV
Vane length	101.7 cm
Average radius, r_0	0.303 cm
Total Nº of cells	160
Nº of radial matcher cells	8
Normalized acceptance	0.05π cm-mrad
Transmission	91%
Q, measured	6,300
RF power, peak	160 kW
Vane-vane voltage	72 kV
Surface field	1.9 Kilpatrick
Duty factor	≤ 0.2 %
Cavity weight	90 kg (200 lbs)

A numerically controlled (NC) milling machine can typically achieve an accuracy within 0.5 mils (0.0005 inches). The average machining error of each of the four vane tips before plating was 0.3, 0.2, 0.5 and 0.2 mils from specification thereby verifying the machine tool accuracy and feasibility for generating a precision RFQ vane geometry. The vertical and horizontal vanes were bolted together as shown to form an extremely rigid, stable structure that does not require any adjustments to achieve the proper vane tip spacing. The cavity is loop

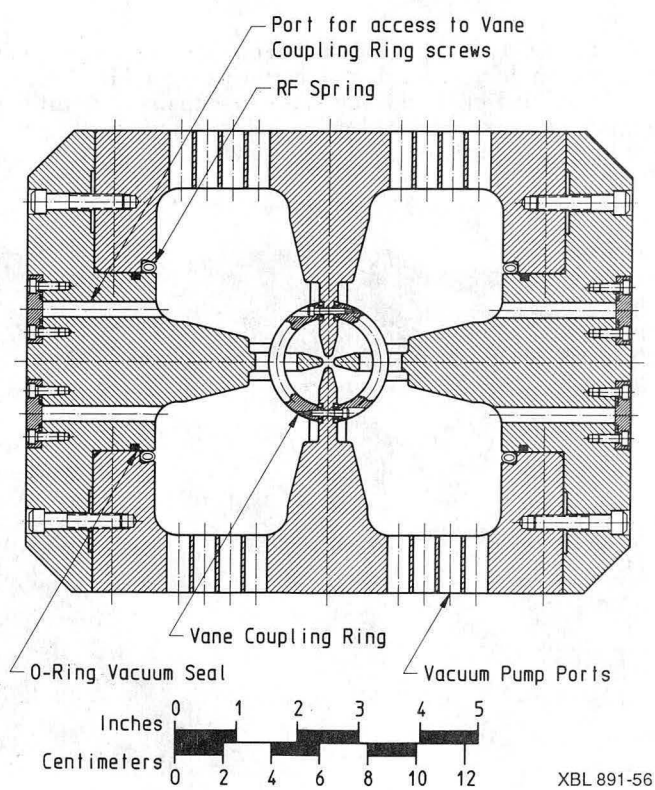

Figure 1: Typical cross section of RFQ at the pump port.

driven with the RF drive loop located at the longitudinal center of the RFQ. Vane coupling rings, used to improve field stability, are located near each end of the vanes with provision for an additional set of coupling rings at the center. Holes through the cavity walls as shown in Figure 1 provide access for fastening the vane coupling rings to opposing vanes. The holes also provide access for a depth micrometer to verify the positional accuracy of the vane tips after assembly. Canted coil springs were used for the RF joints between the vanes. These springs have the same dimensions and geometry as those used on the LBL 200 MHz RFQ designs[2]. They were wound from beryllium copper wire and precipitation hardened to maintain good spring properties under constant loading. This type of RF joint has proven itself in maintaining excellent contact for RF current over years of high power operation in LBL's 200 MHz RFQ design. Neither coarse nor fine RF frequency tuning is required for this particular RFQ application; however, they may be easily provided. Bars may be easily fastened to the inside of the cavity prior to assembly, thereby providing coarse frequency changes by changing the cavity volume. Also, a rotatable loop penetrating through a vacuum seal in the cavity wall could be added for fine frequency tuning and tracking.

The integral vane/cavity geometry has a large cross sectional area for the conduction path radially through the vanes. This large area combined with the high thermal conductivity of its aluminum structure provides for the efficient removal of RF induced heat away from the RF surfaces. Cooling of the cavity for the present use of proton acceleration is by natural convection since the duty factor is 0.2% or less. Cooling passages, however, may be easily and economically added to the external surfaces when required for high duty factor or CW applications. The excellent thermal conduction inherent in this design provides a nearly isothermal structure with consequently greater dimensional and RF frequency stability.

The vane tip modulations on all the vanes were machined using a single tool cutter as shown in Figure 2. This method of machining the vane tips is a significant change from the method using ball end mill cutting tools which were utilized on the LBL 200 MHz RFQs. The previously used ball end mill cutters traversed across the vane at incremental steps along the length of the vane to produce the required modulation geometry. This new method utilized a cutter that rotated about its axis in a single position while the NC mill moved the vane vertically and longitudinally beneath the cutting tool. The cutter produced a constant vane tip radius of 0.228 cm with a surface finish smoothness on aluminum of thirty-two to sixty-three microinches. The time for NC machining the vane tips with this type of cutter was significantly reduced from the time required for machining with ball end mill cutters. Also, each vane with its wide, flat base and inherently rigid geometry could be bolted directly to the bed of the NC mill for all machining operations. This eliminated the need for costly fixturing previously required on RFQ vanes. The NC mill bed provided the most rigid, precision surface from which to reference for machining of the vane modulations and precision engagement surfaces.

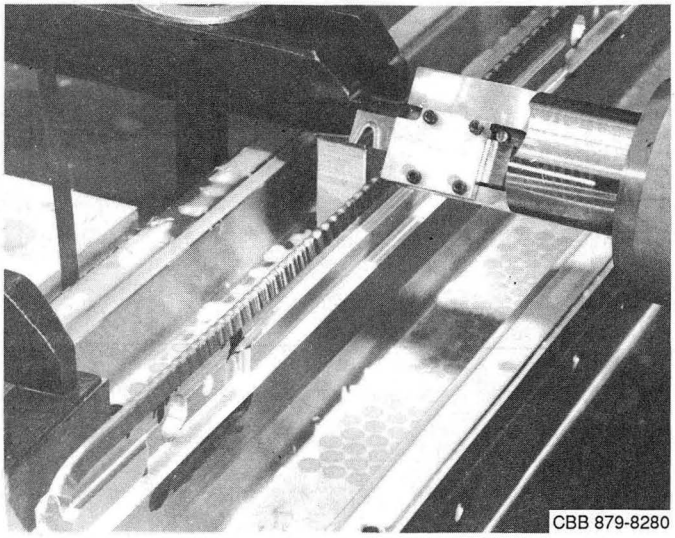

Figure 2: Vane tip cutting operation.

Material Selection and Plating

Selection of the proper material for the RFQ structure was based on the requirements for machinability, strength, stability, weight, good thermal conductivity and cost. In addition, the material had to be compatible with a process for plating high conductivity copper. While previous LBL RFQ's have been constructed of copper plated carbon steel, it was decided that aluminum best met the selection criteria for this new design. A 5000 series, non-heat-treatable alloy was considered because of its relatively low residual stresses, but its availability in the required plate thickness was very limited. A widely used heat-treated, wrought aluminum alloy, 6061-T6, was the material of choice. Two of the vanes were partially stress-relieved at 375 to 400^0 F for 50 minutes just prior to finish machining in an attempt to improve material stability. However, this heat treatment which reduced residual stresses with only about a 5% reduction in the strength and hardness of the material, did not have a significant effect on dimensional stability when compared with fully hardened 6061-T6. Proper vane set-up in an unconstrained position and small depth finish cuts were the significant factors in the NC milling operation for achieving dimensionally accurate vanes.

Zincate treatment followed by a cyanide-copper strike was the activation process chosen for preparing the cavity for bright-acid copper plating. All inner surfaces of the RFQ cavity were plated with bright-acid copper 1 to 3 mils thick except for the vane tips which were left with a cyanide-copper strike coat having an average thickness of 0.3 mils. The O-ring and engagement surfaces were masked and left bare aluminum to maintain dimensional accuracy. The exterior surface of the cavity was anodized for hardness and durability.

Assembly and Testing

Assembly of the RFQ proved to be straightforward due to the simplicity and self-aligning feature of the mechanical design. The four vanes which form the cavity walls were bolted together with RF springs and O-ring seals installed between the vanes. No adjustments or shimming was required for assembly of the structure. The vane tips were properly aligned on the first assembly, and their positions were proven to be reproducible to within 0.1 mils on repeated assemblies.

The cavity vacuum seal is shown in Figure 3. The seal is made of four O-rings running longitudinally between the vanes with each joined to an O-ring at the end plates[3]. The longitudinal O-rings are joined to the

end plate O-rings with specially molded "T" sections. The O-ring material is Buna-N, and all joints were made with a cyanoacrylate glue. Pump ports with 0.375 inch diameter holes on 0.435 inch centers were provided on the top and bottom walls of the cavity. This provides the capability of pumping all four quadrants, if required, while maintaining the same field perturbation produced by the holes in each quadrant. Monte Carlo calculations along with past LBL experience indicated there was sufficient conduction between the vane tips and ends to achieve a pressure of 1 x 10^{-7} Torr with a single 8 inch diameter cryopump. This pressure was confirmed during vacuum testing of the cavity. However, vacuum calculations indicate that a single 4 inch diameter cryopump would provide a vacuum of approximately 1 x 10^{-6} Torr which would be adequate for many applications. An alternate approach to high vacuum pumping would be to mount the RFQ inside a vacuum tank, thus requiring no vacuum seals on the resonator structure. Vacuum sealing the resonator cavity as just described, however, provides for a lighter structure that is directly accessible from its exterior surfaces.

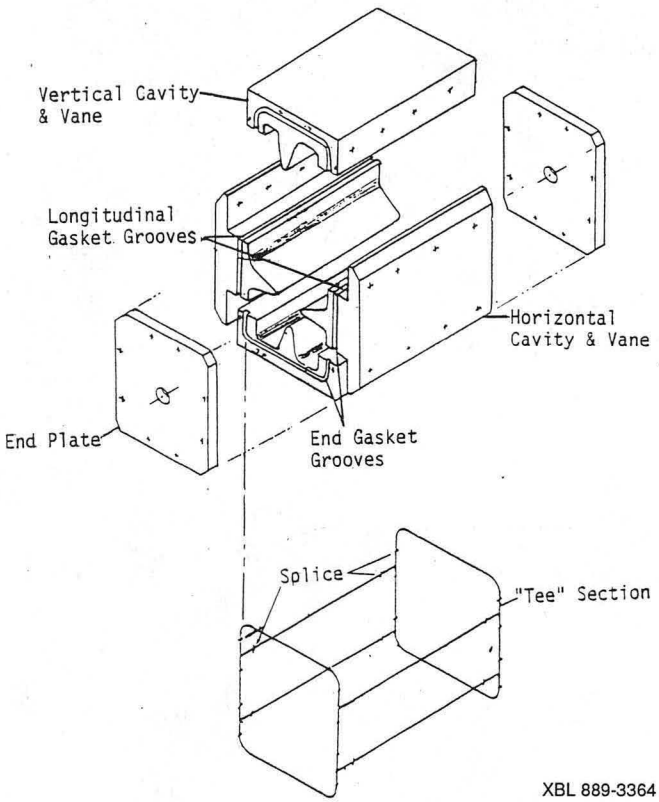

Figure 3: Cavity vacuum seal (shortened for illustration).

Low power testing was performed at LBL and high power tests of the RFQ were done at AccSys Technologies, Inc., under contract to and in conjunction with LBL[4]. The measured quadrant unbalance was <2% at the rings and approximately 10% at the center where the drive loop is located. The quadrupole field component varied within ±4% along the length. This fully satisfactorily field distribution was achieved upon initial assembly with no adjustments, shims or tuners required. The structure conditioned to over 1.9 times the Kilpatrick within five hours. The Q measured was 6,300 which was 65% of the ideal Q, i.e., the Q calculated for a pure copper cavity with no RF joints. In previous structures having individual vanes mounted inside a cylindrical cavity, the measured Q was only 50% of the ideal. As shown in Figure 1, this design concept requires only four RF contact joints in the cavity structure. The number of RF contact joints between the cavity and vanes has been reduced to half of that required for previous LBL RFQ designs. This is probably the significant factor in producing a higher Q value with a consequently lower input power required.

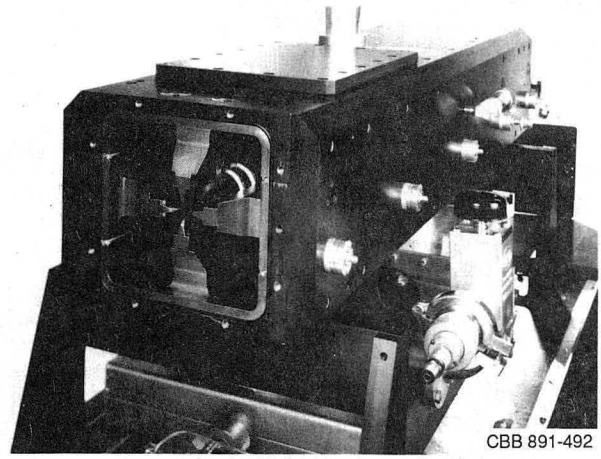

Figure 4: Completely assembled 410 MHz RFQ.

Costs

The engineering, construction and assembly costs of an aluminum RFQ based on this design concept are approximately one-third the estimated costs for a steel RFQ having individual vanes mounted within a cylindrical cavity. Machining and plating time were significantly reduced since, excluding the end plates, only four parts, which consist of two identical pairs, are required. The self-aligning features of this design reduced the time required for assembly and alignment to one-tenth that required for previous LBL RFQ's having a cylindrical cavity with four separate vanes.

Conclusion

This RFQ design concept with its integration of the vanes with the cavity has satisfactorily proven itself in having the precision assembly, manufacturing economy and high performance required for physics research as well as biomedical and industrial applications. This design particularly lends itself to large scale production, and it has proven itself as a technology that can be readily transferred to industry.

References

1. S. Abbott, "An Improved Integrally Formed Radio Frequency Quadrupole," U.S. patent application filed by U.S. Dept. of Energy.

2. S. Abbott, R. MacGill, and R. Yourd, "Mechanical Design of a Heavy Ion RFQ," IEEE Transactions on Nuclear Science, Vol. NS-30, Nº 4, p. 3004, March 1983.

3. R. Caylor and R. MacGill, "RFQ Vane and Cavity Vacuum Seal Development," LBL Engr. Note M6665, March 1987.

4. D. Howard, R. Caylor, R. Gough, J. Lax, R. MacGill, R. Richter, R. Ridgeway, and J. Staples, "Optimizing the High Power Input to the LBL 400 MHz Proton RFQ," this conference.

LAWRENCE BERKELEY LABORATORY
TECHNICAL INFORMATION DEPARTMENT
1 CYCLOTRON ROAD
BERKELEY, CALIFORNIA 94720