LBL-26226
Preprint

Lawrence Berkeley Laboratory
UNIVERSITY OF CALIFORNIA

RECEIVED
LAWRENCE
BERKELEY LABORATORY

FEB 15 1989

LIBRARY AND
DOCUMENTS SECTION

To be submitted for publication

Neutron and Fission Decay of Isoscalar Giant Resonances in ^{238}U

P.J. Countryman, K.A. Griffioen, K. van Bibber,
M.R. Yearian, and J.R. Calarco

November 1988

TWO-WEEK LOAN COPY

This is a Library Circulating Copy which may be borrowed for two weeks.

LBL-26226 c.2

Prepared for the U.S. Department of Energy under Contract Number DE-AC03-76SF00098.

DISCLAIMER

This document was prepared as an account of work sponsored by the United States Government. While this document is believed to contain correct information, neither the United States Government nor any agency thereof, nor the Regents of the University of California, nor any of their employees, makes any warranty, express or implied, or assumes any legal responsibility for the accuracy, completeness, or usefulness of any information, apparatus, product, or process disclosed, or represents that its use would not infringe privately owned rights. Reference herein to any specific commercial product, process, or service by its trade name, trademark, manufacturer, or otherwise, does not necessarily constitute or imply its endorsement, recommendation, or favoring by the United States Government or any agency thereof, or the Regents of the University of California. The views and opinions of authors expressed herein do not necessarily state or reflect those of the United States Government or any agency thereof or the Regents of the University of California.

LBL-26226

Neutron and Fission Decay of Isoscalar Giant Resonances in ^{238}U*

P.J. Countryman, K.A. Griffioen, K. van Bibber,
M.R. Yearian, and J.R. Calarco

Nuclear Science Division
Lawrence Berkeley Laboratory
1 Cyclotron Road
Berkeley, California 94720

November 1988

*This work was supported by the Director, Office of Energy Research, Office of High Energy and Nuclear Physics, Nuclear Physics Division of the of the U.S. Department of Energy under Contract DE-AC03-76SF00098.

Neutron and Fission Decay of Isoscalar Giant Resonances in ^{238}U

P. J. Countryman, K. A. Griffioen[†], K. Van Bibber[‡], M. R. Yearian

Department of Physics and High Energy Physics Laboratory, Stanford University, Stanford, CA 94305

J. R. Calarco

Department of Physics, University of New Hampshire, Durham, New Hampshire, 03824

Abstract

We have measured the neutron decay of giant resonances in ^{238}U by detecting a neutron in the backward hemisphere in anti-coincidence with a fission fragment registered in a large (67% of 4π) parallel-plate avalanche counter array. These (α,α'n$\bar{\text{f}}$) measurements, along with the (α,α'f) data taken simultaneously, directly yield the branching ratio Γ_n/Γ_f for the isoscalar giant quadrupole and monopole resonances. Our results are consistent with Γ_n/Γ_f for the giant dipole resonance at corresponding excitation energies.

Although many[1−6] have studied the decay of the isoscalar giant quadrupole (GQ_0R) and monopole (GM_0R) resonances in ^{238}U, few have been able to agree on the strengths and branching ratios involved. Early (α,α'f) measurements[1] seemed to indicate that the fission probability of the GQ_0R is much less than that of the giant dipole resonance (GDR) in the same region of excitation energy ($P_f(E1)\approx 0.22$).[7−8] By measuring both cross sections $\sigma(\alpha,\alpha'f)$ and $\sigma(\alpha,\alpha')$, one can directly obtain the fission probability $P_f = \Gamma_f/\Gamma_{tot}$. The presence of contaminant peaks in the (α,α') cross section, as well as a large continuum background, complicates the analysis of these data. Inclusive electron scattering measurements (e,e′) of the giant resonances,[9] on the other hand, are very difficult due to the presence of the radiative tail from elastic scattering. This tail disappears from the coincidence (e,e′f) data, leaving virtually no background; however, the large uncertainties in the (e,e′) cross sections make the extraction of fission probabilities nearly impossible. Thus, conclusions about resonant fission probabilities from (e,e′f) measurements must be made with reference to sum rules or strengths calculated for collective states, e.g. the quasi-particle random phase approximation (QRPA).[10] The three existing sets of (e,e′f) cross sections[4−6] agree in shape and magnitude, but the extracted E2/E0 strength functions differ significantly depending on whether one uses Tassie-model form factors in the analysis (resulting in $P_f(E2)\approx \frac{1}{3}P_f(E1)$[4,5] if the resonance exhausts the sum rule) or whether one attempts to deduce the form factors from the data (yielding $P_f(E2)\approx P_f(E1)$).[6] The latter analysis, however, yields an E1 transition radius much greater than that predicted by the QRPA[10] or the Deal-Fallieros-Noble sum rule[11].

Given that exclusive experiments eliminate many sources of background from the spectra, perhaps the cleanest way to measure a fission probability is by observing all possible decay channels. In the case of the actinides, fission and neutron emission overwhelmingly dominate all other open channels. Hence, by measuring the ratio of decay widths Γ_n/Γ_f we can effectively determine P_f. Such a simultaneous measurement eliminates many systematic errors involved in the comparisons with inclusive data. Moreover, the neutron energy spectra may reveal non-statistical components of the decay. The challenge of such

an experiment, however, lies in the separation of post-fission neutrons (having multiplicities $\nu \approx 2.5$–4) from primary neutrons. We have overcome this problem by developing an efficient veto for fission events. Our measurement is the first of its kind and demonstrates the feasibility of measuring primary neutron spectra in fissionable nuclei.

Fig. 1 shows the setup of our experiment. The LBL 88-Inch Cyclotron supplied the beam of 120 MeV alpha-particles, and the target was self-supporting depleted uranium (565 μg/cm^2). Six parallel-plate avalanche counters (PPAC's) in the shape of equilateral triangles formed a hexahedron enclosing the target, one pyramid in the forward and one in the backward hemisphere. This arrangement permitted us to observe at least one of the fragments from a fission decay with a probability of $67 \pm 5\%$. Most of the loss in efficiency came from angles close to the plane of the target. Three solid-state ΔE-E telescopes, each with solid angle 0.65 msr, viewed the target through the space between the forward PPAC's. These made an angle of 17° with the beam, a local maximum in the $L = 0$ and $L = 2$ angular distributions. Neutrons seen in the array of 8 liquid-scintillator time-of-flight detectors (5.1 cm $\times$ 11.4 cm $\oslash$ NE-213), placed 56 cm from the target in the backward hemisphere, could be identified event-by-event as primary or post-fission decays. We defined a coincidence event by a signal in one of the solid-state counters and a simultaneous signal in either a PPAC or a neutron counter. Alpha-particle identification and digital neutron-γ pulse-shape discrimination were performed off line. The neutron and γ counting rates for our unshielded neutron detectors were nearly equivalent. Using both time-of-flight and pulse-shape information, we obtained better than 98% rejection of γ's above threshold. The solid-angle/efficiency product of the neutron counters as a function of energy were determined with a ^{252}Cf source in an ion chamber at the target position and confirmed with a calculation. We have assumed a Maxwellian neutron energy distribution to correct the neutron data for a low-energy cutoff of 0.5 MeV, and have corrected the data off line for accidental coincidences and for the less-than-unity efficiency of the fission veto. The expression (α,α'n$\bar{\text{f}}$) denotes the primary neutron measurements by indicating the fission veto. Complete details of experimental techniques will appear in a forthcoming article[12].

Fig. 2 present an overview of the data. The (α,α'f) spectrum of Fig. 2a (which,

by the nature of our PPAC array, is automatically integrated over fission-fragment solid angle), displays a sharp rise at fission threshold (5.9 MeV) followed by a steep drop when the neutron channel begins to compete (S_n = 6.14 MeV). The GQ_0R sits near E_x = 10 MeV and appears to have a bimodal structure. Second- and third-chance fission cause the increase in cross section at 12 and 18 MeV, respectively. The GM_0R at $E_x \approx 13$ MeV is hard to see because of the rapidly changing fission probability in this region. The neutron spectrum (α,α'n$\bar{\text{f}}$) of Fig. 2b shows a structureless, slow increase above threshold, and a gradual falloff after the onset of second-chance fission. The statistics here are quite poor since the efficiency for neutron detection is very low. Fig. 2c shows the ratio of Figs. 2a and 2b, $R_\alpha \equiv$ (α,α'n$\bar{\text{f}}$)/(α,α'f) (crosses) and the equivalent quantity R_γ for the Saclay real-photon data[13] (solid points). The agreement in shape and magnitude is excellent. Our cross sections σ(α,α'n$\bar{\text{f}}$) are actually a weighted sum over the neutron decay channels,

$$\sigma(\alpha, \alpha'\text{n}\bar{\text{f}}) = \sigma(n) + 2\sigma(2n) + 3\sigma(3n) + ... \tag{1}$$

In order to make the comparison with the photon data, we have formed the ratio $R_\gamma = [\sigma(\gamma, n) + 2\sigma(\gamma, 2n) + ...]/\sigma(\gamma, f)$. [14] Fig. 2d gives the ratio R_α/R_γ, which is unity within statistical errors. This indicates that the summed contribution of resonance and continuum background in α-scattering has the same branching ratio as the GDR to within our 15% experimental accuracy. Assuming that the branching ratio for the background equals that of the dipole resonance, we can place limits on Γ_n/Γ_f for the GQ_0R and the GM_0R. To do so we need to know the resonant and background contributions to (α,α'f). Therefore, we have measured separately the angular distribution of scattered α-particles in coincidence with fission. This experiment was carried out with only the backward PPAC's in place, which allowed us to use four ΔE-E telescopes on a movable arm in the forward hemisphere. Since neutron background is not a problem in this case, we were able to use higher beam currents and collect α energy spectra at seven angles between 7 and 22° with good statistics. We have fit these angular distributions to the form

$$\sigma(\alpha, \alpha'\text{f}) = A(E_x)e^{-\theta/\theta_0} + \frac{dB}{dE_x}P_f F(E_x, \theta), \tag{2}$$

in which $\theta_0 = aE_x + b$, E_x is the excitation energy, and θ is the α scattering angle. The first term describes the featureless background beneath the resonance, which has an

exponential distribution that depends on E_x and the fitting parameters a and b. The second term is the resonant cross section expressed as a differential strength $(dB/dE_x)P_f$ in the fission channel multiplied by the cross section per unit strength $F(E_x, \theta)$ taken from a distorted-wave calculation. We have calculated $F(E_x, \theta)$ for E2 and E0 with the computer codes DWUCK[15] and ECIS[16], respectively, following Brandenburg, *et al.*[3] by scaling the optical-model radii measured for ^{208}Pb. At the angles greater than 7°, the E2 and E0 angular distributions are in phase and differ from each other only in the relative depth of the minima. As a consequence, we cannot separate these two strengths. Rather, we have analyzed the full range of excitation energy using either the E2 or E0 calculated angular distributions. The (α,α'f) data of Fig. 3 are well-described by the fit. Fig. 4a and 4b display the extracted multipole strength assuming E0 and E2 angular distributions, respectively. The differences in these two cases are slight. Superimposed on both is the E2/E0 strength distribution derived from the most recent (e,e'f) data[6]. We identify the broad bumps at 10 and 13 MeV with the GQ_0R and GM_0R respectively (refs. 5,6). In this case, the agreement with other experiments is quite good (see Table 1).

With the resonant (α,α'f) cross section in hand, we can now estimate the background contribution at 17° for both fission and neutron channels,

$$\sigma_{BG}(\alpha, \alpha'\mathrm{f}) = \sigma(\alpha, \alpha'\mathrm{f}) - \sigma_{res}(\alpha, \alpha'\mathrm{f}) \tag{3}$$

and

$$\sigma_{BG}(\alpha, \alpha'\mathrm{n}\bar{\mathrm{f}}) = \sigma(\alpha, \alpha'\mathrm{n}\bar{\mathrm{f}}) - R_{res}\sigma_{res}(\alpha, \alpha'\mathrm{f}) \tag{4}$$

in which R_{res} is the ratio $\sigma_{res}(\alpha, \alpha'\mathrm{n}\bar{\mathrm{f}})/\sigma_{res}(\alpha, \alpha'\mathrm{f})$. We can solve for R_{res} assuming that $R_{BG} \equiv \sigma_{BG}(\alpha, \alpha'\mathrm{n}\bar{\mathrm{f}})/\sigma_{BG}(\alpha, \alpha'\mathrm{f}) = R_\gamma$. The results averaged over each resonance are listed in Table 2. Clearly, within the errors of the experiment the resonant contributions agree with the photon data. Unfortunately, the error bars are quite large. Systematic errors result from uncertainties in the PPAC solid angle-efficiency product (±5%), relative normalizations of (α,α'f) data taken in separate runs (±5%), and the quoted systematic errors in the Saclay data itself (±6%). Because the GQ_0R sits below the threshold for 2-neutron emission, R_{res} is simply Γ_n/Γ_f, and is consistent with a normal (i.e. E1) fission probability. The analysis of our errors gives a lower limit to the fission probability of

one-half normal. That is consistent with the upper limit on the fission probability given in Ref. 1. Because the GM_0R sits between first- and second-chance fission plateaus, both R_{BG} and R_{res} are changing rapidly over the energy range of the monopole. Therefore, the average R_{res} for the monopole is quite sensitive to the competition between single and double neutron emission. Table 2 compares the ratios Γ_n/Γ_f for various experiments, assuming $\Gamma = \Gamma_n + \Gamma_f$.

If the quadrupole fission probability were smaller than normal, it might be possible that the GQ_0R would have a strong non-equilibrium decay component. If this is so, it would show up in the neutron energy spectra. Fig. 5 shows a typical neutron energy spectrum for $8 < E_x < 12$ (the region of the GQ_0R) with a statistical fit $N(E_n/kT)\exp(-E_n/kT)$ folded with the neutron time-of-flight line-shape correction. The temperature $T = 0.43$ MeV is consistent with a Fermi gas with level-density parameter $a = A/10$. No significant peak in the spectrum occurs at large neutron energies, indicating that non-equilibrium decay is not significant. The low non-statistical contribution is consistent with measurements of 10-15% on ^{208}Pb [17].

Although the neutron counting statistics were rather poor, our experiment demonstrates the feasibility of measuring primary neutron spectra from fissionable nuclei. Our results ($\Gamma_n/\Gamma_f = 3.6$) are consistent with a normal fission probability for the GQ_0R and exclude $P_f(E2) < \frac{1}{2}P_f(E1)$, the upper limit found in Ref. 1. The lack of non-statistical neutron decay is consistent with the conclusion of a normal fission probability. From the above value of Γ_n/Γ_f and our (α,α'f) measurements, we conclude that the state at 10 MeV exhausts a large fraction of the isoscalar E2 sum rule (our data prefer a value of 60%). In view of the demonstrated quality of strength extractions from coincidence electron scattering, (e,e$'$n$\bar{\text{f}}$) measurements[18] would provide more rigorous and direct bounds on Γ_n/Γ_f.

We would like to thank R. G. Stokstad, C. Lyneis, and the staff of the LBL 88-Inch Cyclotron for reliable operations during the experiment. This work is supported by USDOE contracts DE-AM03-76SF00326 (Stanford University), W-7405-ENG-48 (LLNL), and DE-AC03-76SF00098 (LBL). KVB gratefully acknowledges support from an A. P. Sloan Research Fellowship.

References

[†]Present address: Department of Physics, University of Pennsylvania, Philadelphia, PA 19104

[‡]Present address: Department of Physics, Lawrence Livermore National Laboratory, P. O. Box 808, Livermore, CA 94305.

[1]J. van der Plicht, *et al.*, Nucl. Phys. **A346**, 49 (1980).

[2]F. E. Bertrand, *et al.*, Phys. Lett. **99B**, 213 (1981).

[3]S. Brandenburg, *et al.*, Phys. Rev. Lett. **49**, 1687 (1982).

[4]D. H. Dowell, *et al.*, Phys. Rev. Lett. **49**, 113 (1982).

[5]K. A. Griffioen, *et al.*, Phys. Rev. Lett. **53**, 2382 (1984), K. A. Griffioen, *et al.*, Phys. Rev. **C34**, 1375 (1986).

[6]Th. Weber, *et al.*, Phys. Rev. Lett. **59**, 2028 (1987).

[7]A. Veyssière, *et al.*, Nucl. Phys. **A199**, 45 (1973).

[8]J. T. Caldwell, *et al.*, Phys. Rev. **C21**, 1215 (1980).

[9]Serious efforts have been made to extract resonances in the continuum by inclusive electron scattering. See, for example, R. Pitthan, *et al.*, Phys. Rev. **C21**, 28 (1980) for ^{238}U.

[10]D. Zawischa and J. Speth in "Dynamics of Nuclear Fission and Related Collective Phenomena," editors P. David, T. Mayer-Kuckuk, and A. van der Woude, Lecture Notes in Physics, Vol. **158** p. 231, (Springer-Verlag, Berlin, 1982).

[11]T. J. Deal and S. Fallieros, Phys. Rev. **C7**, 1709 (1973); J. V. Noble, Ann. Phys. **67**, 98 (1971).

[12]P. J. Countryman, *et al.*, in preparation for Nuclear Instruments and Methods.

[13]Hereafter, we restrict comparison of our data to the Saclay photoneutron and photofission data[7]. The Saclay experiment had a single neutron efficiency superior to the LLNL experiment, resulting in much smaller systematic errors.

[14]Note that our R may be different – either smaller or greater – than Γ_n/Γ_f above S_{2n} = 11.28 MeV. Γ_n/Γ_f in contrast, is determined only by the primary decay, n or f, of ^{238}U at E_x, and has nothing to do with the decay of subsequent daughters.

[15]P. D. Kunz, program DWUCK, Univ. of Colorado, unpublished.

[16]J. Raynal, Optical Model and Coupled Channels Calculations in Nuclear Physics, in Computing as a Language of Physics, International Center for Theoretical Physics, Trieste (1971).

[17]J. R. Calarco, Ph.D. thesis, U. of Illinois, 1969.

[18]G. O. Bolme, *et al.*, (University of Illinois preprint P87/11/201) have recently demonstrated the feasibility of neutron decay measurements in electron scattering (e,e′n).

FIGURES

Figure 1. Schematic top view of the experiment. The target is enclosed by a double-pyramid array of PPAC's.

Figure 2. The spectra $(\alpha,\alpha' f)$ (a), and $(\alpha,\alpha' n \bar{f})$ (b), at $\theta_{\alpha'} = 17°$. Open symbols in (a) are the background derived from the fitting procedure described in the text. (c) The ratios R_α (this work) and R_γ (Ref. 7). (d) The ratio R_α / R_γ.

Figure 3. Measured cross-sections $d^2\sigma(\alpha,\alpha' f) / d\Omega\, dE_x$ from a dedicated $(\alpha,\alpha' f)$ experiment. Shown here are data taken at $\theta_{\alpha'} = 13°$ (a), 15° (b), and 17° (c).

Figure 4. The E2/E0 strength found in $(\alpha,\alpha' f)$, assuming the strength is (a) entirely E2; (b) entirely E0. In both panels, the solid line is the corresponding strength function from the (e,e'f) work of Ref. 6. The following sum-rule values were used: $S(E0,\Delta T=0) = 1.01 \times 10^5$ MeV e^2 fm^4, $S(E2,\Delta T=0) = 1.00 \times 10^5$ MeV e^2 fm^4.

Figure 5. Neutron energy spectrum summed over E_x = 8 to 12 MeV. Best fit to Maxwellian energy spectrum is indicated by the solid line.

TABLES

Table 1. Comparison of the E2/E0 strength (percentage of one isoscalar Energy Weighted Sum-Rule) found in $(\alpha,\alpha'f)$ (this work) and (e,e'f) in Refs 4-6. Numbers in parentheses result from assuming $(\Gamma_n / \Gamma_f)_\lambda = (\Gamma_n / \Gamma_f)_{E1}$. For this work, only statistical errors are shown.

Table 2. Comparison of the neutron-fission yield ratio, R, for the GQ_0R and GM_0R measured in this work, and the same quantities inferred from Refs. 1-6, averaged over the excitation energy of the GQ_0R ($\approx$ 8 to 12 MeV) and the GM_0R ($\approx$ 12 to 16 MeV). For the experiments which did not measure the neutron decay branch, the ratio R was formed by averaging the quantity $\bar{\nu}(E) \times (1-P_f) / P_f$ over the indicated energy ranges, where $\bar{\nu}(E) = \sum_\nu \nu\, \sigma(\gamma,\nu n) / \sum_\nu \sigma(\gamma,\nu n)$, is taken from the data of Ref. 7, and P_f is the fraction of the energy-weighted sum-rule observed in the fission decay channel. Also shown is R for the GDR obtained from Ref. 7. For this experiment, the first error value shown is statistical, and the second is systematic.

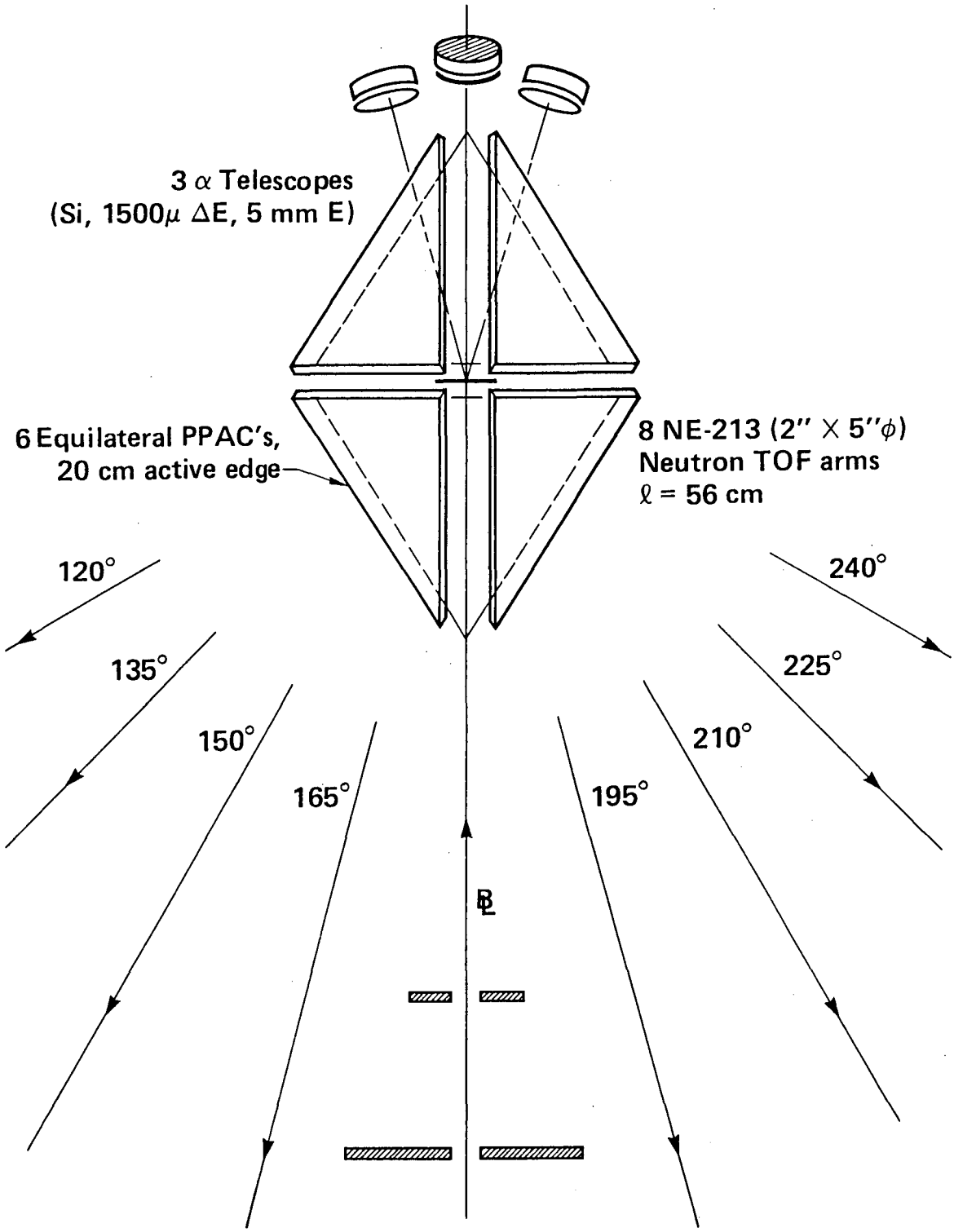
3 α Telescopes
(Si, 1500μ ΔE, 5 mm E)
6 Equilateral PPAC's,
20 cm active edge
8 NE-213 (2" × 5"φ)
Neutron TOF arms
ℓ = 56 cm
120°
135°
150°
165°
195°
210°
225°
240°
BL

Fig. 1

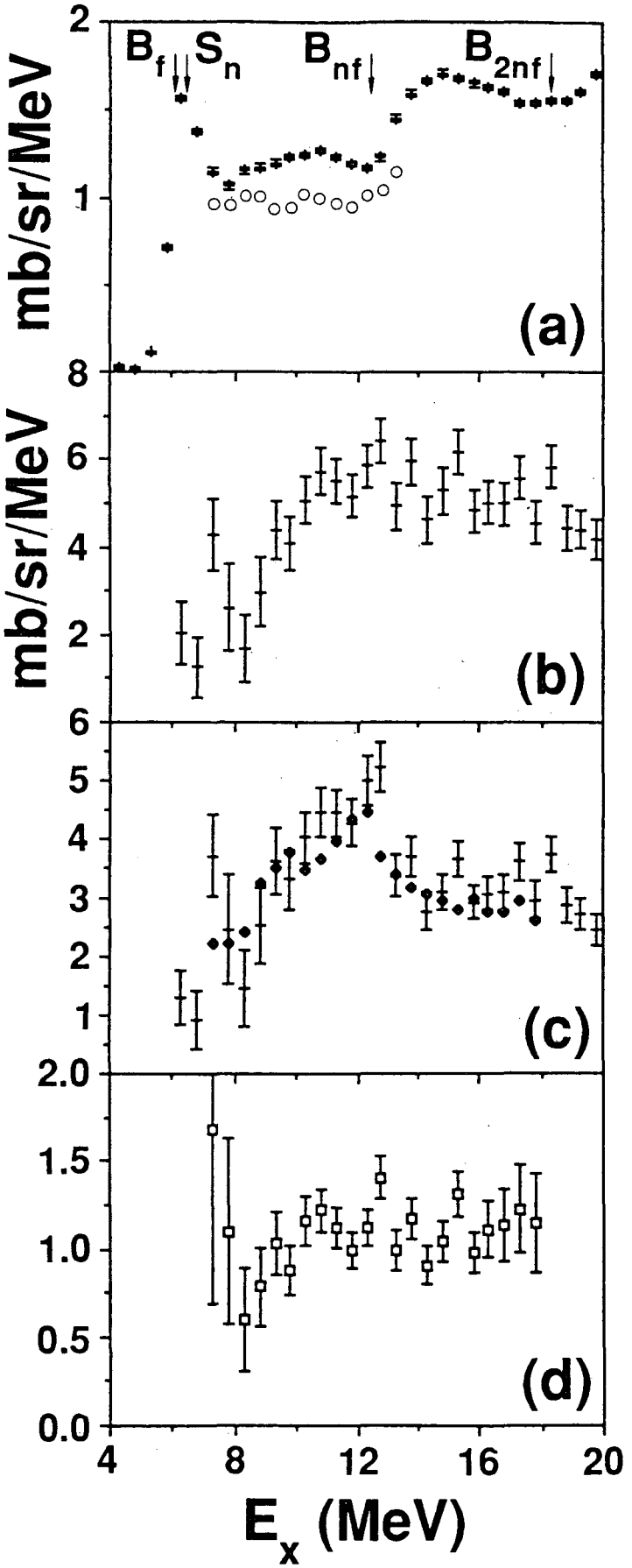

Fig. 2

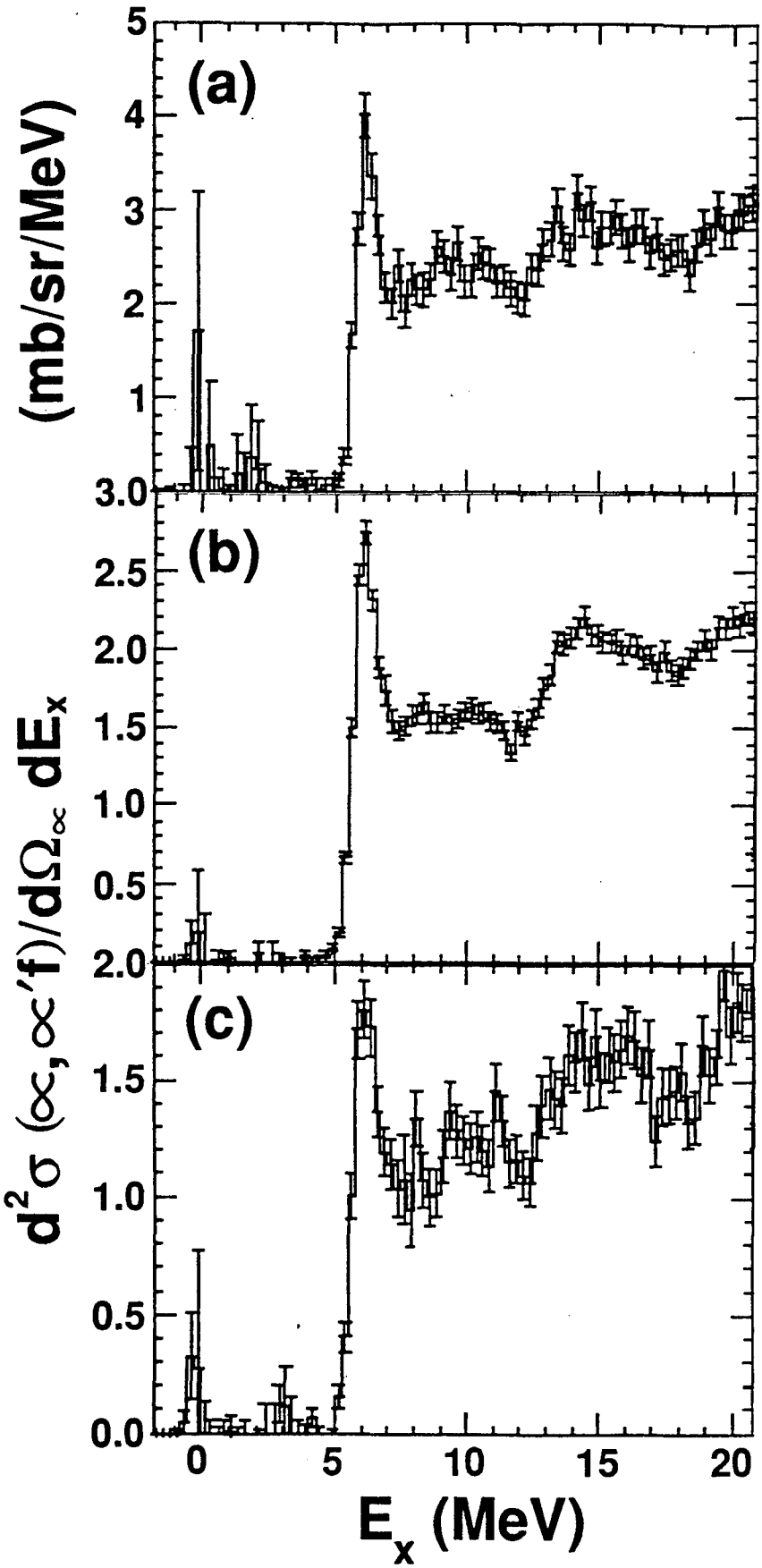
(a)
(b)
(c)
(mb/sr/MeV)
$d^2\sigma(\alpha,\alpha'f)/d\Omega_\alpha\, dE_x$
E_x (MeV)
5
4
3
2
1
3.0
2.5
2.0
1.5
1.0
0.5
2.0
1.5
1.0
0.5
0.0
0
5
10
15
20

Fig. 3

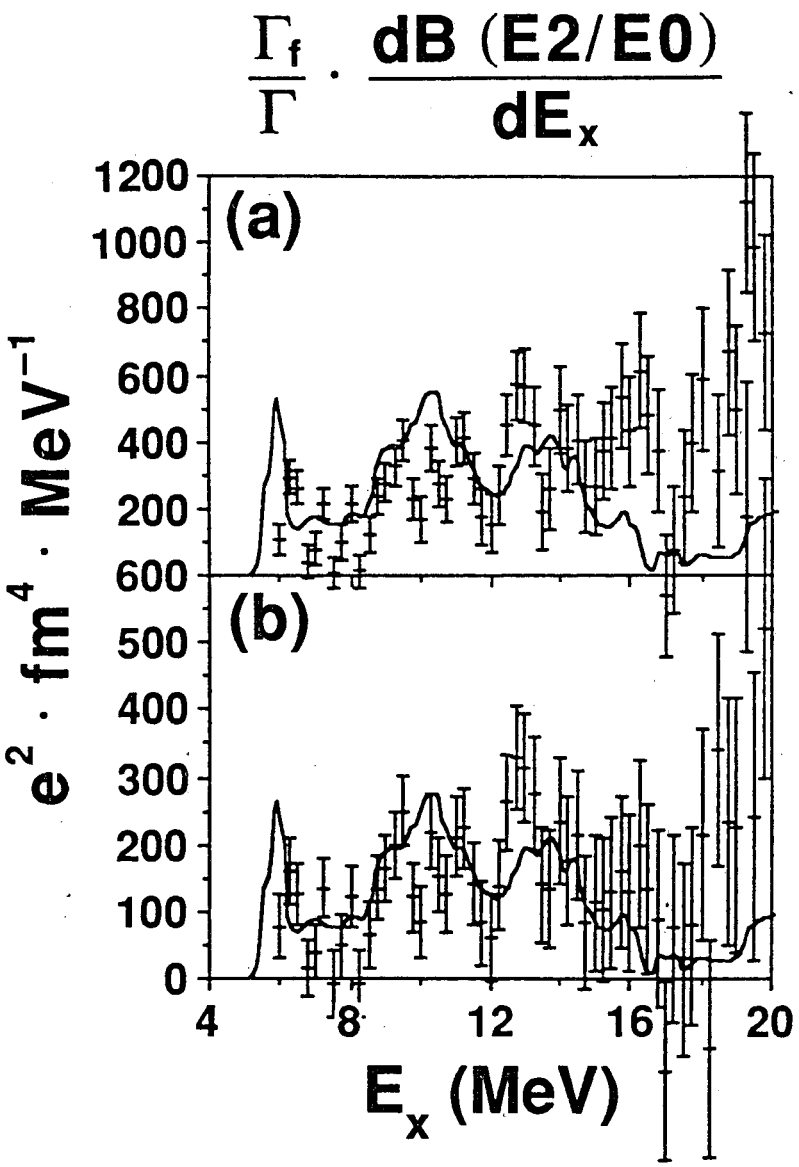
$\frac{\Gamma_f}{\Gamma} \cdot \frac{dB\ (E2/E0)}{dE_x}$
(a)
(b)
$e^2 \cdot fm^4 \cdot MeV^{-1}$
1200
1000
800
600
400
200
600
500
400
300
200
100
0
4
8
12
16
20
E_x (MeV)

Fig. 4

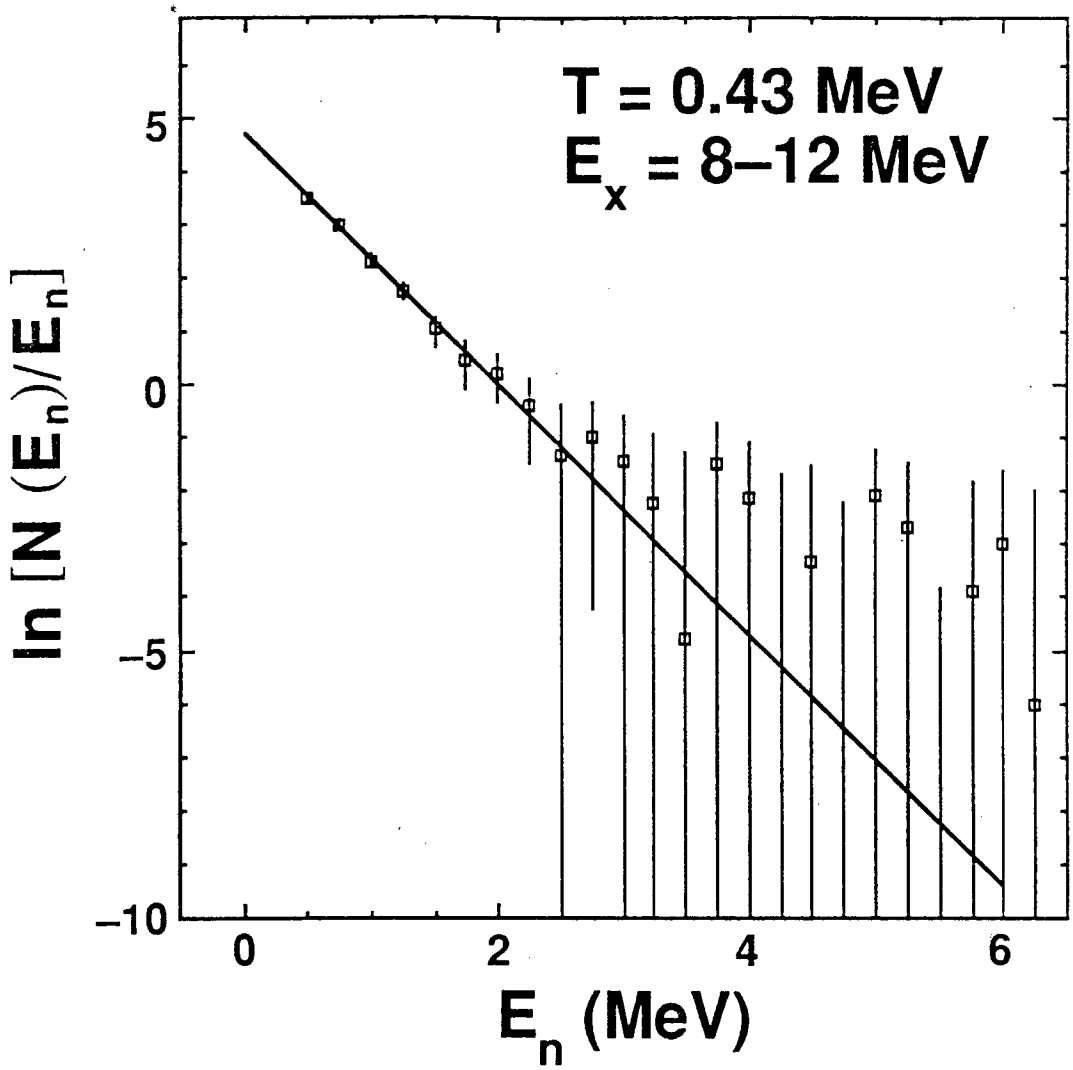

Fig. 5

LAWRENCE BERKELEY LABORATORY
TECHNICAL INFORMATION DEPARTMENT
UNIVERSITY OF CALIFORNIA
BERKELEY, CALIFORNIA 94720