LBL-26236 c.2

Lawrence Berkeley Laboratory
UNIVERSITY OF CALIFORNIA

Materials & Chemical Sciences Division

RECEIVED
LAWRENCE
BERKELEY LABORATORY

APR 26 1989

LIBRARY AND
DOCUMENTS SECTION

Presented at the Applied Superconductivity Conference, San Francisco, CA, August 21–25, 1988, and to be published in the Proceedings

Hot Electron Effect in the dc SQUID

F.C. Wellstood, C. Urbina, and J. Clarke

August 1988

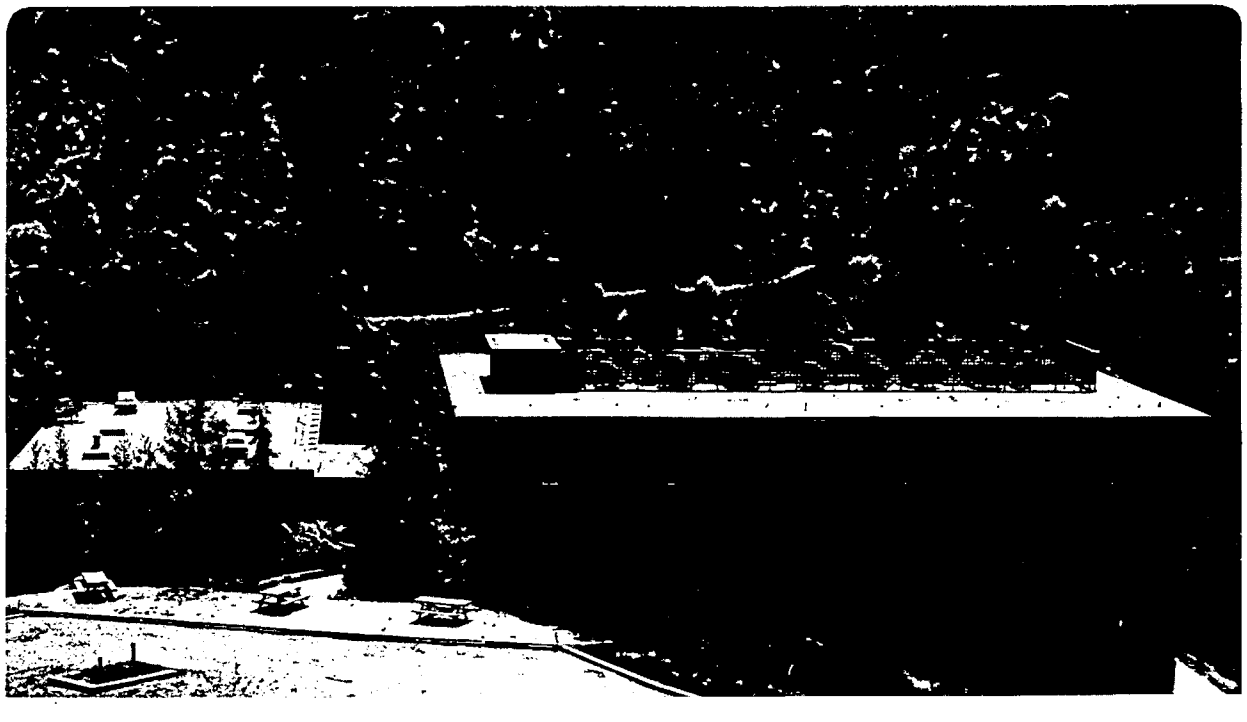

LBL-26236 c.2

Prepared for the U.S. Department of Energy under Contract Number DE-AC03-76SF00098.

DISCLAIMER

This document was prepared as an account of work sponsored by the United States Government. While this document is believed to contain correct information, neither the United States Government nor any agency thereof, nor the Regents of the University of California, nor any of their employees, makes any warranty, express or implied, or assumes any legal responsibility for the accuracy, completeness, or usefulness of any information, apparatus, product, or process disclosed, or represents that its use would not infringe privately owned rights. Reference herein to any specific commercial product, process, or service by its trade name, trademark, manufacturer, or otherwise, does not necessarily constitute or imply its endorsement, recommendation, or favoring by the United States Government or any agency thereof, or the Regents of the University of California. The views and opinions of authors expressed herein do not necessarily state or reflect those of the United States Government or any agency thereof or the Regents of the University of California.

LBL-26236

Hot Electron Effect in the dc SQUID

F. Wellstood, C. Urbina, and John Clarke

Department of Physics
University of California

and

Materials and Chemical Sciences Division
Lawrence Berkeley Laboratory
1 Cyclotron Road
Berkeley, California 94720

August 1988

HOT ELECTRON EFFECT IN THE dc SQUID

F. C. Wellstood, C. Urbina[+] and J. Clarke,
Department of Physics, University of California, and
Materials and Chemical Sciences Division, Lawrence Berkeley Laboratory*,
Berkeley, CA 94720

Abstract

We have investigated the temperature dependence of the noise in thin-film dc Superconducting QUantum Interference Devices (SQUIDs) down to 20 mK. The white noise measured in the early versions of our SQUIDs did not decrease as the bath temperature was lowered below 150mK. We have attributed this saturation to a hot electron effect in the thin-film AuCu resistors shunting the Josephson junctions. A theoretical investigation showed that the temperature of the electrons in the shunts should be given by $T_e = (P/\Sigma\Omega)^{1/5}$, where P is the power dissipated in the shunts, Ω is the shunt volume, and Σ is a proportionality constant. Experimentally, we found $\Sigma=(2.4\pm0.6)\times10^9 WK^{-5}m^{-3}$. We have redesigned the shunts, adding large thin-film cooling fins, to increase their volume substantially. This technique has reduced T_e to about 50 mK, with a corresponding improvement in the sensitivity of the SQUIDs.

Introduction

Our goal was to obtain a dc SQUID with a sensitivity limited only by quantum mechanical zero point motion[1]. Such a device would be useful as a preamplifier in a cryogenic Weber bar detector[2] provided it could be made with a relatively large inductance L. Our approach was to reduce the noise in the device by cooling it to 20 mK in a dilution refrigerator. At low temperatures, our early devices[3] displayed excess flux noise with a spectral density scaling as $1/f^{2/3}$, where f is the frequency. This excess noise was of such a high level that the white noise was generally not measurable at temperatures below 200 mK and frequencies less than 10 kHz. Eventually, we were able to make devices in which the slope of the excess flux noise was steeper, approximately -1, and were thus able to measure the white noise above 2 kHz. In these devices, described below, we found that the white noise did not decrease as the temperature was lowered below about 150 mK. We explain this behavior in terms of electron heating in the resistive shunts of the junctions of the SQUID. We first present a brief overview of the theory of the hot electron effect, then describe measurements of hot electron effects in thin metal films, and finally discuss the results obtained on our SQUIDs.

Theory

For the purposes of this paper, we assume that a normal metal is composed of two thermodynamic systems, an electron gas and a phonon gas, coupled together by the electron-phonon interaction. For the thin-film systems considered below, the metals are deposited on an insulating substrate, and the phonons in the metal are coupled to the phonons in the substrate. The dissipation of power P in the electron gas causes its temperature, T_e, to rise above that of the phonon gas, T_p, which in turn is higher than the substrate temperature T_o. These increases in temperature may be interpreted in terms of a thermal resistance, R_{ep}, between the electrons and the phonons, and a Kapitza thermal resistance[4], R_K, between the two phonon systems. The resistance R_{ep} has been estimated by Little[5], and more recently by Roukes et al.[6].

From a microscopic point of view, R_{ep} is determined by the rate at which the electrons lose energy by the emission and absorption of phonons. We can calculate this rate for a single electron by using Fermi's Golden Rule, and find the rate for the entire gas by summing over all electron states with a weighting given by the electron occupancy. The result of such an analysis can be written as:

$$P = \int_{-\infty}^{\infty} f(E_k)D_e(E_k)dE_k \int D_p(q)\varepsilon_q \frac{2\pi}{\hbar}|M|^2[1-f(E_{k'})]\times$$
$$\times\{[n(q)+1]\delta(E_k-E_{k'}-\varepsilon_q)-n(q)\delta(E_k-E_{k'}+\varepsilon_q)\}d^3q \quad , \quad (1)$$

where E_k and ε_q are the energies of an electron and a phonon with wavevectors $\bar{k}$ and $\bar{q}$, $\bar{k}'=|\bar{k}-\bar{q}|$, M is the electron-phonon matrix element, f is the electron distribution, n(q) is the phonon occupancy, D_e is the electron density of states, and D_p is the phonon momentum density of states.

To evaluate this expression, we make the following assumptions: (i) the Fermi surface is spherical, (ii) the electron-phonon interaction is described by a scalar deformation potential, (iii) the phonons obey a linear dispersion relation, and (iv) the electron and phonon temperatures T_e and T_p are well-defined so that we may replace the electron and phonon distributions by Fermi-Dirac and Bose-Einstein distributions, respectively. With these assumptions, Eq. (1) may be evaluated exactly in the low temperature limit, and one finds the remarkably simple result:

$$P=\Sigma\Omega(T_e^5-T_p^5),$$

where Ω is the volume of the metal, $\Sigma=0.524\alpha^*\gamma$, γ is the electronic heat capacity per unit volume, $\alpha^*=14.4k_B^3\varepsilon_F^2/(9\pi\mu\hbar^4 s^4 v_F)$ is the thermally averaged electron-phonon scattering rate divided by T_e^3 as defined by Gantmakher[7], s is the longitudinal speed of sound, v_F is the Fermi velocity, ε_F is the Fermi energy, and μ is the mass density. This result is analogous to Kapitza's law[4] for the heat transfer between two phonon systems: $P=\sigma A(T_p^4-T_o^4)$, where $\sigma=1/(4R_K A T_o^3)$, and A is the contact area between the sample and the substrate. From these two relations, it can be shown that the hot electron effect will become dominant below a temperature $T_1=0.166\sigma A/(\Sigma\Omega)$.

The above treatment makes certain simplifying assumptions, which are not well satisfied for the AuCu thin-films described below. First, the noble metals do not have spherical surfaces, the electron-phonon interaction is non-scalar and depends upon the location of the electron on the Fermi surface, and we have neglected alloying effects. Second, we have implicitly assumed that the dimensions of the metal are large compared to the phonon wavelengths, which is not at all the case in our thin-film samples at low temperatures. In our system, the behavior of the thermal phonons will be dominated by substrate effects, and $T_p=T_o$. The result of these corrections appears to be to alter the magnitude of the

[+]Present address: Centre d'Etudes Nucleaires de Saclay, Service de Physique du Solide et de Resonance Magnetique, Orme des Merisiers, 91191 Gif-sur-Yvette Cedex, France.

coefficient Σ, without affecting the temperature dependence. The theory also assumes that power is dissipated uniformly throughout the metal. When this is not the case, the results can be drastically modified, as we will see.

Heating in Normal Metal Thin-Films

Since an exact calculation of the heating effects in a thin film is quite difficult, and no data exists on the magnitude of the effect in alloys, we have determined the size of Σ experimentally. We tested two Au(Cu25wt%) thin-film resistors, with the configurations shown in Fig. 1. The smaller volume resistor, R_1, has a resistance of 260 mΩ, and has approximately the same volume ($2.2\times10^{-17}m^3$) and area ($6\times10^{-10}m^2$) as the two shunt resistors in one of our typical early SQUIDs. The larger volume resistor, R_2, has a resistance of 76 mΩ, a volume of $1.9\times10^{-13}m^3$, and an area of $1.6\times10^{-6}m^2$. This large difference in size enabled us to test the volume dependence of the heating effect, and also provided information for subsequent designs of the SQUID shunts.

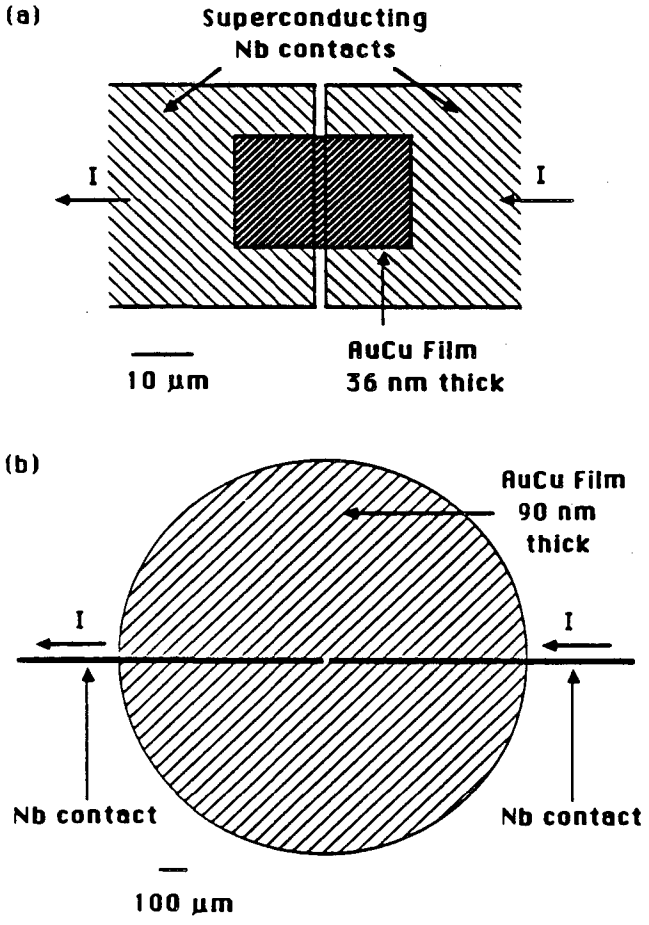

Fig. 1(a). Configuration of the thin-film resistor R_1. (b) Schematic of the large volume resistor R_2. The Nb contacts approach to within 7µm of each other. In (a) and (b), the Nb contacts supply current, and are connected to the input coil of a dc SQUID for noise measurements.

For the heating measurements, we applied power P to the electrons in the film by sending a current, I, through the film, and used a dc SQUID to measure the Nyquist voltage noise spectral density, $S_V(f)=4k_BT_eR$, generated by the film, where R is the film resistance. Since it is the electron temperature which enters into the Nyquist relation, the noise magnitude gives a direct measure of T_e. The SQUID and film were cooled in a dilution refrigerator, which kept the substrate at temperature T_o.

Figure 2 shows the dependence of T_e on the power P. In the case of R_1 at 25 mK, there are three notable points: The onset of heating is at a very low power (about 1fW), the transition from a region in which heating is negligble to one in which it is dominant is abrupt and is seen as a fairly sharp knee in the curve, and, above the knee, the data fall on a straight line on the log-log plot. The solid line is a fit to a heating law of the form $T_e=[(P/\Sigma\Omega)+T_o^n]^{1/n}$. The fit is quite good, even at the knee, and yields $\Sigma=(2.4\pm0.6)\times10^9 WK^{-5}m^{-3}$, and $n=4.87\pm0.05$. Since this is only slightly less than the predicted value of 5, these results provide strong evidence for the hot electron effect. Heating dominated by Kapitza resistance would yield n=4, and at low temperatures would require R_K to be about 40 times larger than one would naively estimate based on the materials and the geometry. Thus we believe the observed heating effect is dominated by the electron-phonon effect, rather than the Kapitza resistance. From the experiments of Roukes et al.[6] on

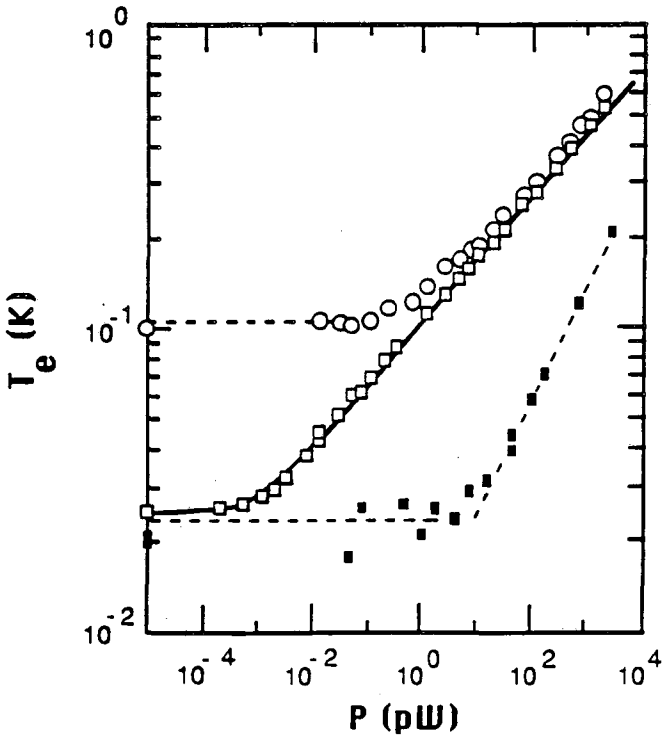

Fig. 2 Electron temperature T_e vs. applied power P: □ Resistor R_1 at T_o=25 mK, ○ Resistor R_1 at T_o=105 mK, ■ Resistor R_2 at T_o=25 mK. Dashed lines are to guide the eye, solid line is fit to R_1 data.

Cu thin-films, we can deduce a value of Σ about 25% smaller than our own; this small difference is somewhat surprising, given the different film compositions. These values of Σ are about a factor of 2 larger than that found by Anderson and Peterson[8] in bulk Cu, the difference possibly being due to substrate effects.

From Fig. 2, we see that the larger volume resistor, R_2, shows much less heating than R_1 for the same amount of power. At a power level of 10pW, typical of that in our SQUIDs at low temperatures, T_e is only about 30mK, as compared to 140mK for R_1. This means that we should be able to redesign the SQUID shunts to reduce the heating greatly. After the onset of heating, however, the slope is steeper than for R_1. The data yields n=2.7. We do not understand this different slope in detail, but believe that it may result from the spatial inhomogeneity of the hot electrons. The configuration of R_2 is such that its resistance is determined predominantly by the narrow gap between the two superconducting contacts. Most of the current flows in this region, and the electron heating is greatest there. At low temperatures, the hot electrons are slow to emit phonons, and have time to diffuse far into the surrounding region before cooling. In the same way, cooler electrons from the surrounding region can diffuse into the central gap. The surrounding region thus acts as a "cooling fin" for the electrons. The inelastic electronic mean free path in a dirty metal is $\ell_{in}=(\ell_o v_F \alpha^* T_e^{-3})^{1/2}$, where ℓ_o is the elastic mean free path. For our AuCu films with ℓ_o=20nm, at 20mK we estimate ℓ_{in}=2mm, while at 100mK one finds ℓ_{in}=180μm. Thus at low temperatures, all of the electrons in the cooling fin can contribute to the cooling, while at 100mK only those in a much smaller region near the central gap are involved. The effective volume of the structure should thus decrease as its temperature increases. A rough calculation reveals that n=2 when the spatial variation is taken into account, a value closer to the observed value n=2.7 than the value n=5 predicted by the theory for the spatially uniform case.

Results on SQUIDs

We tested four planar thin-film dc SQUIDs (D1, D2, M1, and M2) in the configuration shown in Fig. 3(a), each with an estimated inductance L of 0.5nH. The shape of the SQUID body was the same for all of the SQUIDs, and only the shunts differed. The Au(Cu25%wt) shunts for D1 and D2 were of small volume, typical of the majority of SQUIDs we have tested[3] [see Fig. 3b]. Large cooling fins were connected to the shunts of M1 and M2 [see Fig. 3(c)], with the same area but with thicknesses of 30nm and 900nm respectively. The resistance per shunt (R), the area (A) and volume (Ω) of the shunts (including the cooling fins), and the values of $\beta=2LI_o/\Phi_o$ and $\beta_c=2\pi I_o R^2 C/\Phi_o$ are listed in Table I; I_o and C are the critical current and capacitance per junction and Φ_o is the flux quantum. The current-voltage characteristics of D1, D2, and M1 showed slight or negligible resonant structure at low temperatures, and were otherwise nearly ideal. Device M2 showed a moderate amount of structure, presumably because of its higher value of β_c. Consequently, we had to operate M2 at a higher bias voltage than the other devices. The bias voltage V, the current I, the power dissipation P, and the power per unit shunt area and volume are listed in Table II. The last column lists $T_{min}=(P/\Sigma\Omega)^{1/5}$, the minimum temperature that the electrons in the shunt can reach for a power dissipation P, calculated with the value $\Sigma=2.4\times10^9 WK^{-5}m^{-3}$ found in the thin-film measurements. The inclusion of spatial hot electron effects would yield larger T_{min}.

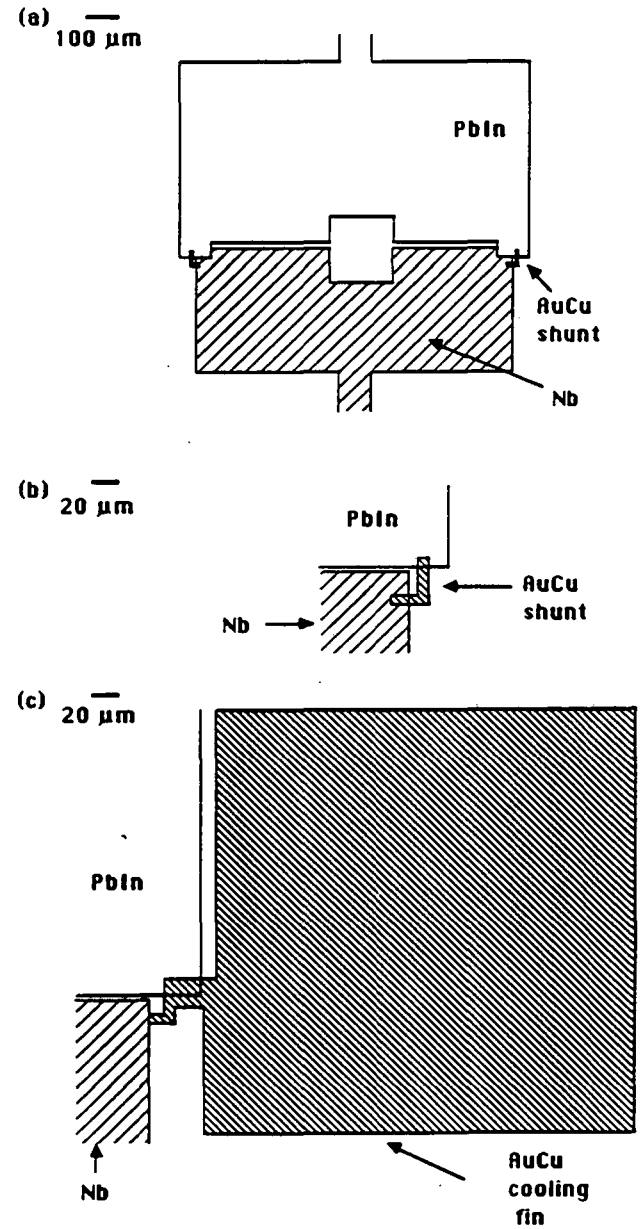

Fig. 3. (a) SQUID configuration for D1 and D2, (b) detail of D1 and D2 shunt, (c) detail of M1 and M2 shunt, the rest of the SQUID is the same as in (a). Cooling fin is 30nm thick for M1 and 900 nm thick for M2.

Table I. Shunt and SQUID parameters for the four dc SQUIDs D1, D2, M1, M2.

SQUID	R (Ω)	A (m^2)	Ω (m^3)	β	β_c
D1	6	9.6×10^{-10}	2.9×10^{-17}	1.6	0.17
D2	6	9.6×10^{-10}	2.9×10^{-17}	1.1	0.12
M1	6	1.54×10^{-7}	4.6×10^{-15}	1.4	0.15
M2	8	1.54×10^{-7}	1.4×10^{-13}	1.5	0.30

Table II. Operating point, power dissipation, and T_{min} for the four dc SQUIDs.

SQUID	V (μV)	I (μA)	P (pW)	P/A (Wm^{-2})	P/Ω (Wm^{-3})	T_{min} (mK)
D1	1.1	5.0	5.4	5.6×10^{-3}	1.9×10^{5}	150
D2	1.1	3.5	3.8	4.0×10^{-3}	1.3×10^{5}	140
M1	1.2	4.5	5.4	3.5×10^{-5}	1.2×10^{3}	55
M2	4.0	5.0	20.0	1.3×10^{-4}	1.4×10^{2}	36

We measured the noise in the SQUIDs as a function of temperature using a second dc SQUID as a sensitive preamplifier[3]. We subtracted the 1/f excess noise and noise from the measuring system[3] to find the spectral density of the white flux noise in the SQUIDs, $S_\Phi(f)$, when the devices were biased near $\Phi_0/4$. Figure 4 shows the flux noise energy $S_\Phi(f)/2L$ vs. the refrigerator temperature T_0. At high temperatures, the flux noise energy for all the SQUIDs scales linearly with T, and is in good agreement with the prediction[9] $S_\Phi(f)/2L=8k_BTL/R$, shown as a solid line. However, at low temperatures, all the data lie above this line. The noise energies in D1 and D2 do not decrease below about 140 mK, but make an abrupt transition from a linear dependence on T to a constant value. This behavior is inconsistent with the effect of an external noise source, which would produce a much more rounded knee, and is entirely consistent with the hot electron effect. The knee temperature of 140 mK is remarkably close to the value of T_{min} listed in Table II for these two devices. The noise in M1 continues to decrease down to about 50mK, below which it is apparently constant. Because of its large cooling fin, its value of T_{min} is smaller than for D1 and D2, and the observed temperature where the noise flattens out is close to the predicted value of T_{min}. The scatter in the data is appreciable because the background correction is large, making a more detailed analysis difficult. The data from SQUID M2 are somewhat more accurate because we used a 50-turn input coil on the measuring SQUID instead of the 20-turn coil[3] used for the other measurements, thereby reducing the background noise. The noise energy of M2 falls almost exactly on the same curve as M1. Although the volume of the cooling fin for M2 was much larger than for M1, it had to be operated at a point where it dissipated substantially more power than M1's. Because of this, and the fact that T_{min} scales as $(P/\Omega)^{1/5}$, T_{min} was only slightly smaller than that for M1. The lowest measured value of the noise energy was $S_\Phi(f)/2L=(5.0\pm0.6)$ ħ.

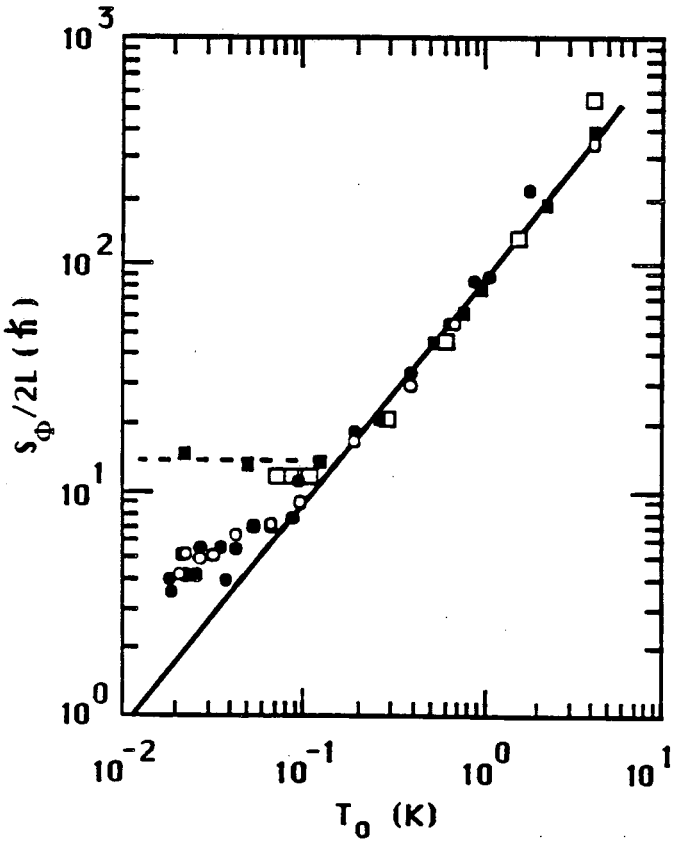

Fig. 4. Flux noise energy vs. T_0 for SQUIDs □ D1, ■ D2, ● M1, ○ M2. SQUIDs were biased near $\Phi_0/4$, with the operating points given in Table II. Solid line is prediction of Tesche and Clarke.[9]

References

*Supported by the Director, Office of Energy Research, Office of Basic Energy Sciences, Materials Sciences Division of the U.S. Department of Energy under Contract No. DE-AC03-76SF00098.

[1] R. H. Koch, D. J. Van Harlingen and J. Clarke, "Quantum Noise Theory for the dc SQUID," Appl. Phys. Lett., vol. 38, pp. 380-382, March 1981.

[2] M. Bassan, W. M. Fairbank, E. Mapoles, M. S. McAshan, P. F. Michelson, B. Moskowitz, K. Ralls, and R. C. Taber, "A Progress Report on the Stanford Low Temperature Gravitational Wave Detector," Proceedings of the Third Marcel Grossman Meeting on General Relativity, New York: Science Press and North-Holland Publishing Co., 1983, pp. 667-678.

[3] F. C. Wellstood, C. Urbina, and J. Clarke, "Excess noise in dc SQUIDs: 4.2K to 20 mK," IEEE Trans. Magn., vol. Mag-23, pp. 1662-1665, March 1987; and "Low Frequency Noise in dc Superconducting Quantum Interference Devices Below 1K," Appl. Phys. Lett. vol. 50, pp. 772-774, March 1987.

[4] O. V. Lounassma, "Experimental Principles and Techniques Below 1K," New York: Academic Press Inc., ch. 9, pp. 263-270, 1974.

[5] W. A. Little, "The Transport of Heat Between Dissimilar Solids at Low Temperatures," Can. J. Phys.,vol. 37, pp. 334-349, March 1959.

[6] M. L. Roukes, M. R. Freeman, R. S. Germain, R. C. Richardson, M. B. Ketchen, "Hot Electrons and Energy Transport in Metals at Millikelvin Temperatures," Phys. Rev. Lett., vol. 55, pp. 422-245, July 1985.

[7] V. F. Gantmakher, "The Experimental Study of the Electron-Phonon Scattering in Metals," Rep. Prog. Phys. vol. 37, pp. 317-362, March 1974.

[8] A. C. Anderson and R. E. Peterson, "The Thermal Resistance Between Electrons and Phonons in Cu," Phys. Lett., vol. 38A, pp. 519-520, March 1972.

[9] C. D. Tesche and J. Clarke, "dc SQUID: Noise and Optimization," J. Low Temp. Phys., vol. 29, pp. 301-331, November 1977.

LAWRENCE BERKELEY LABORATORY
TECHNICAL INFORMATION DEPARTMENT
1 CYCLOTRON ROAD
BERKELEY, CALIFORNIA 94720