LBL-26323 c.2

# Lawrence Berkeley Laboratory
UNIVERSITY OF CALIFORNIA

## Accelerator & Fusion Research Division

RECEIVED
LAWRENCE
BERKELEY LABORATORY

FEB 15 1989

LIBRARY AND
DOCUMENTS SECTION

Presented at the International Symposium on
Heavy Ion Inertial Fusion, Darmstadt, FRG,
June 28–30, 1988

# Induction Linac Drivers: Prospects for the Future

D. Keefe

June 1988

TWO-WEEK LOAN COPY

*This is a Library Circulating Copy which may be borrowed for two weeks.*

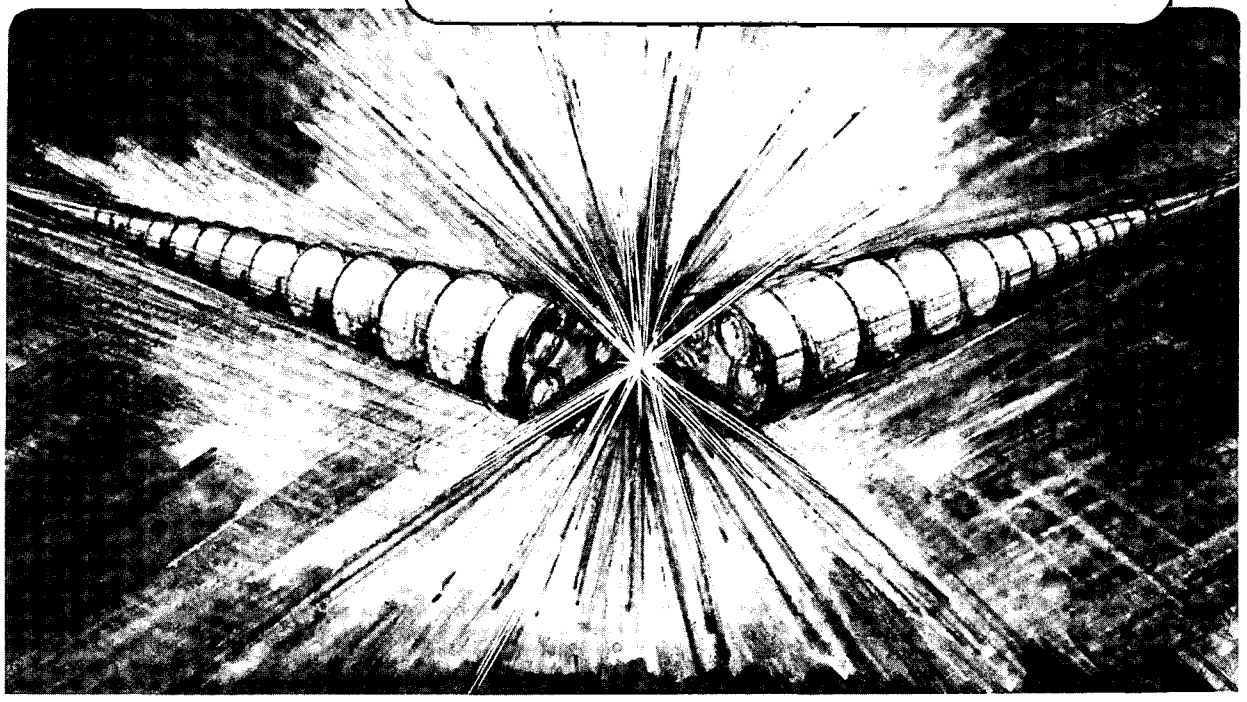

LBL-26323 c.2

Prepared for the U.S. Department of Energy under Contract Number DE-AC03-76SF00098.

## DISCLAIMER

This document was prepared as an account of work sponsored by the United States Government. While this document is believed to contain correct information, neither the United States Government nor any agency thereof, nor the Regents of the University of California, nor any of their employees, makes any warranty, express or implied, or assumes any legal responsibility for the accuracy, completeness, or usefulness of any information, apparatus, product, or process disclosed, or represents that its use would not infringe privately owned rights. Reference herein to any specific commercial product, process, or service by its trade name, trademark, manufacturer, or otherwise, does not necessarily constitute or imply its endorsement, recommendation, or favoring by the United States Government or any agency thereof, or the Regents of the University of California. The views and opinions of authors expressed herein do not necessarily state or reflect those of the United States Government or any agency thereof or the Regents of the University of California.

HIFAN-390

# INDUCTION LINAC DRIVERS: PROSPECTS FOR THE FUTURE*

D. Keefe

Accelerator and Fusion Research Division
Lawrence Berkeley Laboratory
1 Cyclotron Road
Berkeley, California 94720

June 1988

*This work was supported by the Office of Energy Research, Office of Basic Energy Sciences, Dept. of Energy, under Contract No. DE-AC03-76SF00098.

# Induction Linac Drivers: Prospects for the Future

**D. Keefe**
**Lawrence Berkeley Laboratory**
**University of California**
**Berkeley, California 94720**

Summary:

This review is intended to place in perspective our current view of the parameter ranges for induction linac drivers that lead to attractive scenarios for civilian electrical power plants; there is a surprising degree of choice (a factor of two or so in most parameters) before any significant impact on the cost of energy results. The progress and goals of the U.S. Heavy Ion Fusion Accelerator Research (HIFAR) program and reviewed. The step between the realization of the HIFAR goals and a full-scale driver is seen to be very large indeed and will required one or more significant intermediate steps which can be justified only by a commitment to advance the HIF method towards a true fusion goal. Historical anomalies in the way that fusion programs for both military and civilian applications are administered will need to be resolved; the absence of any presently perceived energy crisis results in little current sense of urgency to develop vigorous long-term energy solutions.

## 1. Induction Linac Systems Assessment and the Choice of Parameters

Preliminary results from the Heavy Ion Fusion System Assessment (HIFSA) study were presented in part at the last HIF Symposium in 1986. That study, which was a joint effort by U.S. industry and national laboratories (McDonnell-Douglas, Titan, EPRI, Los Alamos National Laboratory, Lawrence Berkeley Laboratory, Lawrence Livermore National Laboratory, Stanford Linear Accelerator Center), has since been completed and its findings have recently been published in a special issue of Fusion Technology [1].

HIFSA focussed on the induction linac as the technology choice for the heavy-ion accelerator driver but, beyond that, explored a large range of other options including five types of target design and four types of combustion chamber design. For all combinations of options, parameters such as yield-per-shot and repetition rate were varied over a wide range. But the richest range of parameter variations, by far was for the induction linac driver, for which several hundred combinations of ion mass, charge, beam joules, kinetic energy, beam-number, repetition rate, and emittance were calculated. (In two of these, ion mass and emittance, we discovered ex post facto that the range explored had not been quite wide enough). The calculated points were fitted with multi-dimensional polynomials and incorporated into an optimization code, ICCOMO, developed by McDonnell-Douglas [2].

Thus the spirit of the HIFSA was quite different than the previous point-design studies such as HIBALL and HIBLIC for the rf linac/storage ring driver choices [3, 4]. The driver cost numbers were calculated by an LBL cost-evaluation program, LIACEP, which dates from 1979 [5]. This is an "old" code in that, (a) it is difficult to modify, (b) the first 50 MV of accelerator is not handled well and requires personal intervention/checking, and (c) the design algorithms for core, lenses and vacuum need upgrading. LIACEP uses cost optimization at a set of discrete points along the linac to find the lowest-cost combination of lenses and cores at each point. (In contrast with electron linacs, such a lens/core combination at one point in an ion-linac is quite different from the combination appropriate to another point). A pleasing result from LIACEP is that the cost-minimized combination of components it finds tends to correspond to beam currents not far below the maximum transportable values; thus the minimum-cost driver is also one with high efficiency (typically, 30%).

While the cost-minimization procedures and algorithms in LIACEP seem quite adequate for finding reasonable-looking driver designs and in giving good relative cost comparisons over a broad range of parameters, any of its output cost figures cannot be considered as having the same accuracy as that from a careful point design. Recently, a

group of engineers from LANL examined a particular LIACEP module design at one point (1 GV) in one representative driver example, and found that they could improve the engineering and choice of materials for a cost reduction of 30% below the LIACEP calculated cost [6]. (It would be highly gratifying if we could establish this as a generally true result at all points for all drivers! We cannot.)

Some selected HIFSA results follow. Figure 1 illustrates the well-known "economy-of-scale" effect, i.e., that the cost of the electricity station is not proportional to the power output resulting, for example, in a cost of electricity (COE) that is almost twice as much from a 500 MWe plant as from a 1500 MWe plant. Nonetheless, the projected COE of 9.7 cents/kW-h from a 500 MWe plant is not outrageous in the context of a future date. Further, there is a special attraction to the utility company in building the smaller plant size since it requires a lower initial capital outlay. Addition of a second combustion chamber and slight modifications to the driver allow for an upgrade later to 1000 MWe and a drop in the COE. Notice, however, from Fig. 1 that the driver is the largest single cost item (about 40% of total). We regard is as very important to seek ways to cut driver costs; if we could achieve just a factor of two reduction, the driver cost would hardly excite comment.

Fig. 2 shows the latitude in choice one has for five of the driver parameters if we settle on a particular design for the combustion chamber. The COE lies within 5% of the minimum value along each bar. Typically, there is a factor of two between the upper and lower end of the range. Notice that the desired beam energy lies somewhat higher than the value of 3 MJ used up to now and we have since adopted a value of 4.25 MJ as a good reference value. As noted earlier, the ranges in ion mass (A = 130 - 200) and in normalized emittance (15 - 30 $\pi$ mm-mrad) are artificially truncated because of our initial guess at suitable end points; we were surprised to find late in the study that there are many solutions with low COE where the normalized emittance can exceed 30$\pi$ mm-mrad.

The HIFSA study was the first time we studied in a systematic way the variation of cost with ion charge-state (for different masses). As a result we have adopted as a reference a driver configuration as sketched in Fig. 3. As the charge-to-mass ratio is decreased the total accelerator voltage - and cost - also decreases (to maintain qV = 10 GeV). The number of electric-focussed beams needed at the front and the number of final beam transport lines needed to handle the increased perveance both tend to increase with q, thus adding extra costs. A minimum is found for A = 200, q = 3. (Herrmannsfeldt has noted that the accelerator solution is the same for A = 200/3 = 67 and q = 1; the range of the lighter ions in the target would, however, be significantly longer). We have found that there is a cost advantage in using a larger number of beams in the front end than in the main part of the driver; this results, however, in a penalty of emittance dilution at the interface where beam combining occurs.

## 2. Directions in the HIFAR Program

The highlights of the current HIFAR program have been reviewed by Fessenden [7]. The three major experimental facilities are a) the Single Beam Transport Experiment (SBTE), b) the multiple-beam experiment, MBE-4, and c) the 2-MV 16-beam injector; in addition, we have high-voltage test-stands for source development and insulator tests.

Work at the SBTE was suspended for the past two years while the MBE-4 apparatus was being assembled, but we are just beginning to use the apparatus again to test some further issues on emittance growth in space-charge-dominated beams (e.g. growth due to mismatched beams). It should be emphasized that the earlier work with SBTE on the stability boundaries for the safe propagation of high current beams ($\sigma_0 \leq 90°$, $\sigma/\sigma_0 > 0.1$) was a vital ingredient in the HIFSA study; these results allowed us to study, with considerable assurance, the effect of using high-charge-state ions.

MBE-4 was designed specifically to test the physics of current amplification in a multi-gap accelerator (24 gaps). In addition, it took a step in the direction of exploring the

complexity of multiple beams (four). MBE-4 uses a heavy ion ($Cs^+$) to obtain low velocity and hence make the length of the apparatus very long compared with the initial bunch length (14 to 1). Further, the manipulation of voltages to bring about current amplification is done in a much more vigorous and granular a manner than would happen in a driver; hence it has the capability of testing 6-D emittance properties under extreme conditions. We note that a typical driver scenario calls for a current amplification factor in the linac (i.e. excluding the drift compression section) of a factor of 200. Most of this (x 50) comes from the increase in ion-velocity from injection to extraction and the remainder (x 4) from a decrease in bunch length. In MBE-4, the small scale restricts the velocity factor to 2, but notice that the length-factor of 3.8 is essentially that appropriate to a driver. H. Meuth has summarized the current results from MBE-4 [8].

Examination of the schematic of a reference driver shown in Fig. 3, leads to the conclusion that HIFAR has yet to address other issues in beam physics and accelerator technology for a driver. The example driver, for instance, exceeds current HIFAR experience in the following aspects:

a) 3-MV injector, c.f. 200 kV in MBE-4.

b) 16 - 64 beams, c.f. 4 in MBE-4.

c) Beam combining in sets of four-to-one.

d) Predominantly magnetic focussing.

e) Large-angle bending of space-charge-dominated beams.

f) Drift-compression to bunch beam (x10) and remove velocity tilt.

g) Final focus (neutralization, plasma effects, radiation, gas, etc.)

h) Charge-state $q = 3$ for $A \approx 200$.

Rutkowski has reported how we are proceeding with the scale-up of injector technology to 2 MV and 16 beams [9]. Lee has summarized the extensive theoretical and hardware studies for a 4-to-1 beam-combining system [10]; this is a manipulation which is

critical to test since it can lead to cost savings in the driver if the penalty in emittance growth for space-charge-dominated beams turns out to be acceptable.

The Induction Linac Systems Experiment (ILSE) was conceived as a portmanteau experiment to address in combination the first seven of the eight issues listed above. (Ion source studies for charge-state greater than one are more easily done, initially, off-line on a test stand). The design parameters are presented, and the layout shown schematically, by Fessenden [7]. ILSE consists, in fact, of seven experiments done sequentially, of which the first two are in preparation and the third is well along in design. A light ion, $C^+$, is chosen to give high enough speed (for minimum investment in accelerating voltage) to allow the use of convenient magnetic focussing and bending elements. The drift compression section leads to a shortening in pulse-length by close to a factor of three with a corresponding increase in beam current.

The final-focus experiment with ILSE will involve a wide range of experimental possibilities. First, of course, it provides a severe test of all the manipulations and beam physics effects in the previous sections of the accelerator system. Second, if successful, the focussed beam can be used with a puff-valve gas supply to study the two-stream instabilities in a scaled way. Also, a plasma temperature of a few eV may, with luck, be attainable opening up further experiments on plasma effects and target-charging.

While an ILSE-scale experiment can give us confidence in beam manipulations, and can open a window for studying at a low level some of the tough issues that must be encountered in a reactor, the final beam parameters (e.g. 80 joules in 4 beams) fall far short of proving the full feasibility of a fusion system with a target heated to c. 200 eV. We are hopeful that the Sandia experiments with PBFA-2 using light ions will give us much of the information we need. If so, then the HIFAR program would have proved extremely cost-effective in essentially developing the data base demanded of it for an informed fusion program decision some years in the future.

3. After HIFAR is completed, what is the next step?

In my view there are enough target and reaction chamber issues to be explored at suitable scale that it would be foolhardy to proceed directly to a full-scale driver. Instead, we sketch an intermediate step, beyond ILSE, which we could proceed with rather easily, given adequate financial support. See Table 1 for a parameter comparison among ILSE, our example, and a driver.

Some years ago, we examined how we could build a machine in the 100 kJ category that could be expandable to the megajoule level by the simple addition of extra accelerating units, and were convinced we could do it. Insight from the HIFSA studies reinforces that conclusion. The point I make is that this intermediate step is not a throwaway investment but can, if a success, be subsumed component by component into an upgraded device. If that does not seem the right strategy there is yet another approach which Godlove has examined. Here one would reconfigure the pulsers to allow the cores to be reset and pulsed a second time within 10 to 20 μsec. Additional transport lines would be added to provide a delay path for the first pulse; in this way the energy delivered to the target can be twice the nominal output of the accelerator. Addition of two further delay path would allow four times the accelerator output to be delivered at the same time to the target if the cores can be pulsed rapidly four times in successions.

4. The Outlook for Inertial Fusion Power

The present low cost of oil and petroleum does not contribute to any current feeling of an impending energy crisis in the public consciousness. Consequently, there is little sense of urgency that any immediate commitment is needed to develop long-term energy supply sources such as fusion. Most would agree that this situation will change in the near future as dominance in the oil supply market shifts to just four countries in the Middle East. One assumes that the U.S. will develop a renewed commitment to expanded efforts on long-term energy sources when the warning clouds can be seen more clearly. Some such

signs are perceptible: the situation in the Persian Gulf; an import level into the U.S. of oil and petroleum projected to rise to 43% in 1989; fresh concerns about the effects of carbon dioxide from from coal plants on climate; etc. A revived interest in fusion may not be far away.

While I am of the belief that Heavy Ion Fusion has a high probability of being the best of all the methods for fusion power, magnetic or inertial, the method suffers from an historico-political disadvantage referred to in Polansky's opening paper [11], the perception that being a late entry it must be only a back-up. Or even as a back-up to a back-up in that the idea was proposed 16 years after laser fusion which in turn came 14 years after magnetic fusion. The psychological identification of the scientific promise of a method with its chronological age is an attitude all of us must counter at every opportunity we can.

The situation within the U.S. inertial fusion activities leads to still further complications. The ICF program (at about 150M$/year) on lasers and light ions has as its primary aim military applications of inertial fusion, with energy applications relegated to second place. If the ICF plan, as described by Kahalas [12], to proceed with a Laboratory Microfusion Facility (LMF) is to be implemented in 1991, the choice of driver technology will almost certainly, in my view, have to be one which is probably unsuitable for the energy application (e.g., it need not have repetition rate, efficiency). Further, the design philosophy for LMF will to be one of over-reaching in two ways: a yield (1000 MJ/shot) greater than needed for energy uses, and a high probability of achieving its design goal soon after it is completed. The driver beam energy range -- 5 - 10 MJ quoted by Kahalas -- is therefore somewhat higher than we believe to be optimal for fusion power. This design philosophy is at odds with the development strategy that would best fit proceeding to the energy goal, which is probably best accomplished in a sequence of steps of increasing size, i.e. progressing up the learning curve of target performance from below. Finally, we note that the HIF research directed entirely towards energy applications is administered separately (from ICF) under the Office of Energy Research (OER); this seems appropriate

except for the fact that the OER also maintains a completely separate office devoted to magnetic fusion.

A recent (June 1988) encouraging sign that a broader view of inertial fusion may soon be taken appears in the request by the U.S. Senate Appropriations Committee that the National Academy of Sciences review the program again in light of "significant progress" in ICF, and report to Congress. In contrast with the previous Congressional request in 1985 for such a review, their latest call is for an extension beyond the military applications to make also an "assessment of civilian energy potential". This is a review we should welcome.

Table 1

Example of an intermediate step between ILSE and a Driver

| Parameter | ILSE | Example | Driver |
|---|---|---|---|
| $E_{inj}$ (MeV) | 2 | 3 | 3 |
| $E_{fin}$ (MeV) | 10 | 1,000 | ≥ 5,000 |
| $N_B$ | 16 (4) | 16 | 64 (16) |
| Charge (pμc) | 8 | 160 | 500 |
| Energy ( kJ) | 0.08 | 160 | ≥ 2,500 |
| Ion (A) | 12 (q = 1) | ≥ 40 (q = 1) | 200 (q = 3) |
| Pulse Dur. (μsec) | 1 | 5 | 10 |
| Beam Rad. (mm) | 15 | 30 | 40 |
| Curr. Amp. (Linac) | 4 | 70 | 200 |
| Length Fac. | 2 | 4 | 4 |
| Vel. Fac. | 2 | 17 | 50 |
| Drift-Comp. Fac. | 3 | 6 | 10 |

References:


[1] Fusion Technology 13, no. 2, February 1988.

[2] D. S. Zuckerman, D. E. Driemeyer, L. M. Waganer, and D. J. Dudziak, ibid., p. 217 (1988).

[3] B. Badger et al., Karlsruhe Report KfK-3480 (1985).

[4] T. Katayama, A. Itano, A. Noda, M. Takamata, S. Yamada and Y. Hirao, Laser Particle Beam 3, 9 (1985).

[5] A. Faltens, E. Hoyer, D. Keefe and L. J. Laslett, IEEE Trans. Nuc. Sci., NS-26, 3106 (1979).

[6] D. Harris, G. R. Thayer, J. R. Sims, M.D. Henke, D. J. Dudziak and N. Phillips, Los Alamos National Laboratory Report LA-UR-87-XXXX (Oct. 1987).

[7] T. J. Fessenden, presented at this Symposium.

[8] H. Meuth, presented at this Symposium.

[9] H. Rutkowski, presented at this Symposium.

[10] E. P. Lee, presented at this Symposium.

[11] W. Polansky, presented at this Symposium.

[12] S. Kahalas, presented at this Symposium.

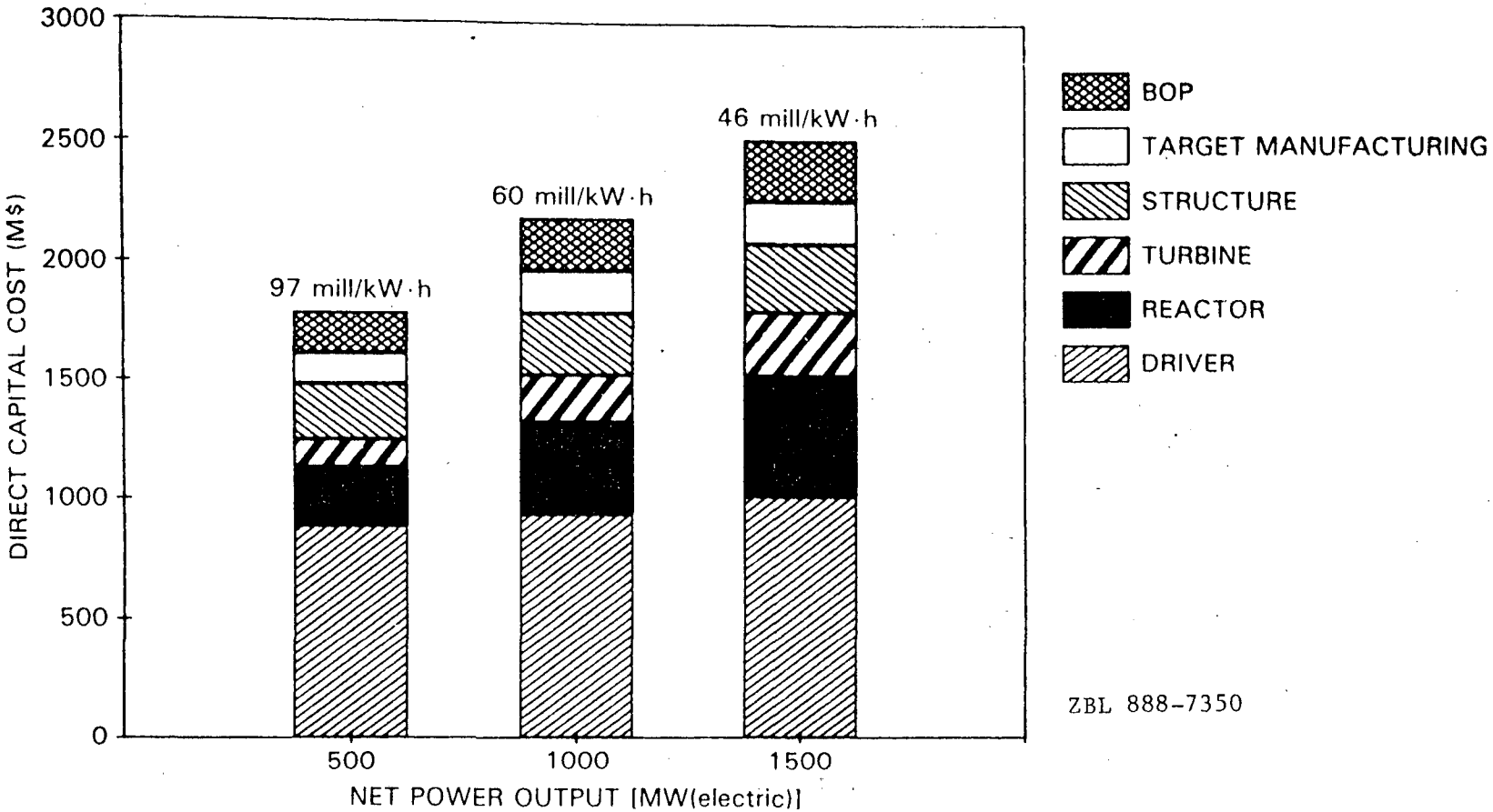


Fig. 1 Near-optimum-case cost breakdown for a wetted-wall reactor system at three power levels. All cases are for a single-shell target. (From Zuckerman, et al., Ref. 2)

Reprinted with permission from David S. Zuckerman, *Fusion Technology*, Vol. 13, 2, p. 241, February 1988. © 1988 by the American Nuclear Society, LaGrange Park, Illinois 60525.

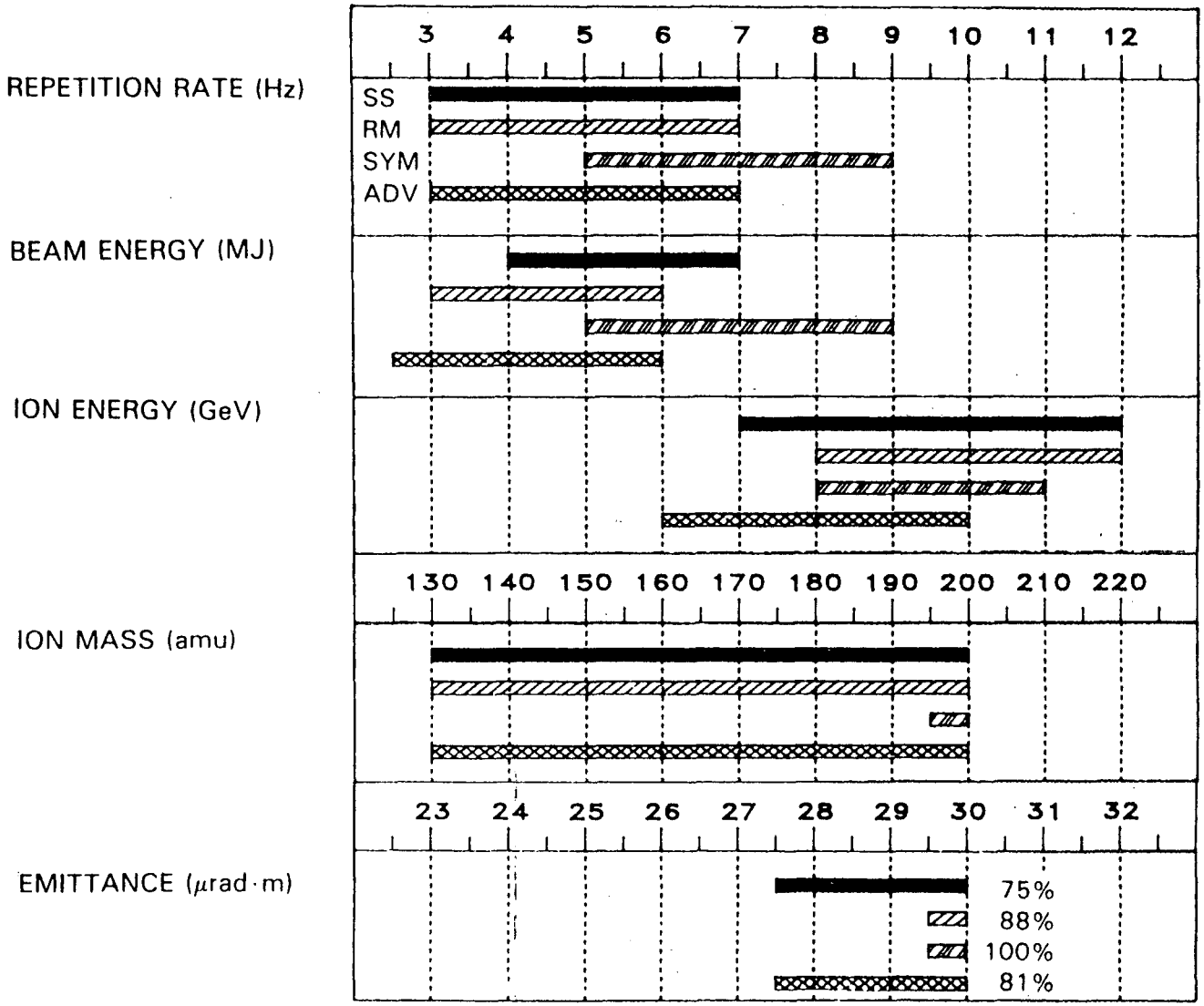


ZBL 888-7349

Fig. 2 Summary of near-optimum parameter ranges for a 1000-MW (electric) wetted-wall cavity. In this figure the target assumption is denoted: SS = single shell, RM = single shell range multiplied, SYM = symmetric, and ADV = advanced. (From Zuckerman, et al., Ref. 2)

Reprinted with permission from David S. Zuckerman, *Fusion Technology*, Vol. 13, 2, p. 237, February 1988. © 1988 by the American Nuclear Society, LaGrange Park, Illinois 60525.

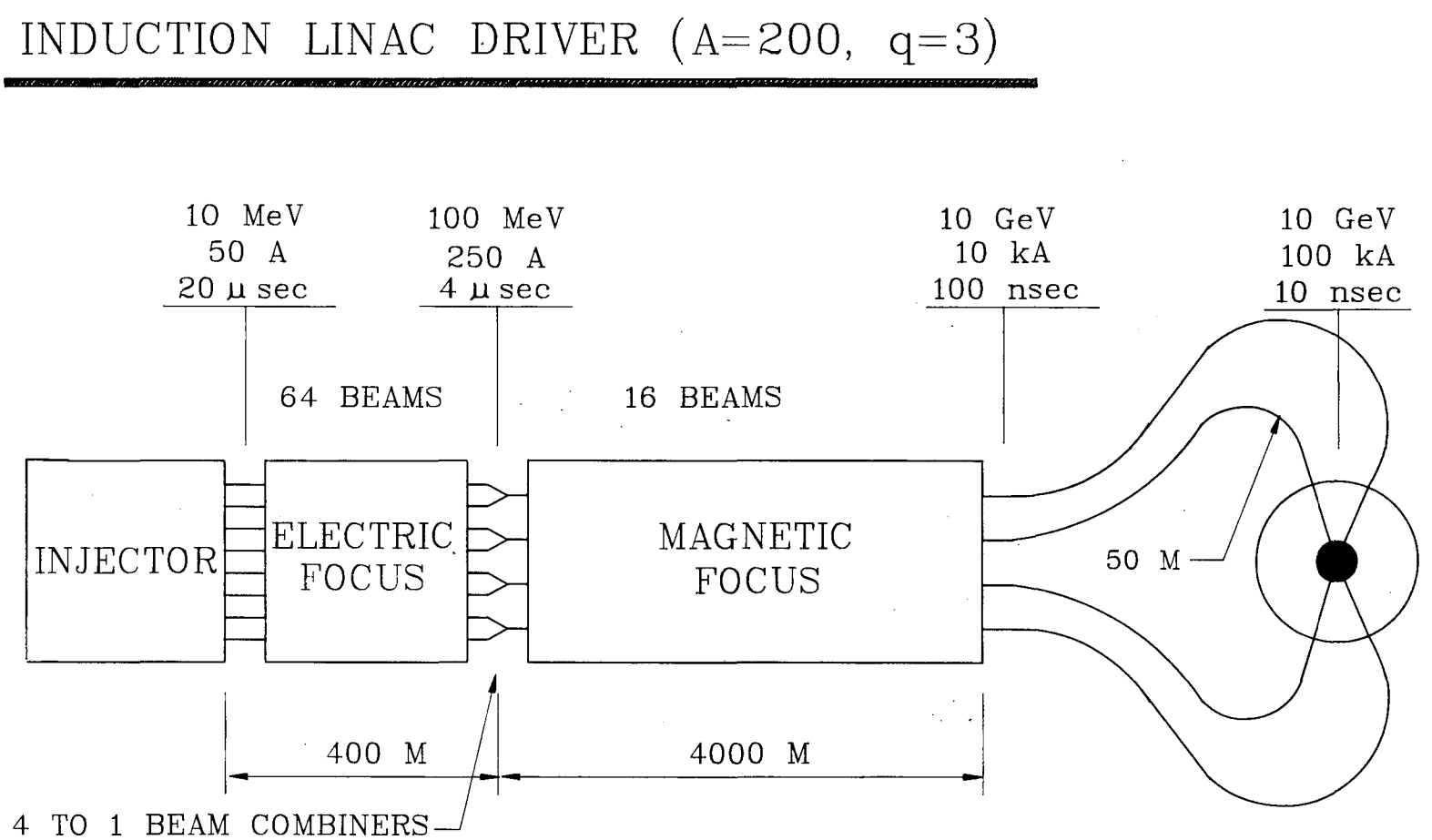


XBL 865-1965

Fig. 3 Schematic of a driver near the cost optimum.

LAWRENCE BERKELEY LABORATORY
TECHNICAL INFORMATION DEPARTMENT
1 CYCLOTRON ROAD
BERKELEY, CALIFORNIA 94720