RECEIVED
LAWRENCE
RADIATION LABORATORY

SEP 23 1974

LIBRARY AND
DOCUMENTS SECTION

Submitted to Advances in
Cryogenic Engineering

LBL-2669
Preprint

SUPERCONDUCTING MAGNET AND CRYOSTAT FOR A SPACE APPLICATION

W. L. Pope, G. F. Smoot,
L. H. Smith and C. E. Taylor

April 1974

Prepared for the U.S. Atomic Energy Commission
under Contract W-7405-ENG-48

TWO-WEEK LOAN COPY

This is a Library Circulating Copy which may be borrowed for two weeks. For a personal retention copy, call Tech. Info. Division, Ext. 5545

LAWRENCE BERKELEY LABORATORY
UNIVERSITY OF CALIFORNIA
BERKELEY

LBL-2669

DISCLAIMER

This document was prepared as an account of work sponsored by the United States Government. While this document is believed to contain correct information, neither the United States Government nor any agency thereof, nor the Regents of the University of California, nor any of their employees, makes any warranty, express or implied, or assumes any legal responsibility for the accuracy, completeness, or usefulness of any information, apparatus, product, or process disclosed, or represents that its use would not infringe privately owned rights. Reference herein to any specific commercial product, process, or service by its trade name, trademark, manufacturer, or otherwise, does not necessarily constitute or imply its endorsement, recommendation, or favoring by the United States Government or any agency thereof, or the Regents of the University of California. The views and opinions of authors expressed herein do not necessarily state or reflect those of the United States Government or any agency thereof or the Regents of the University of California.

TABLE OF CONTENTS

	Page
Introduction	1
Spectrometer Configuration	3
Diamagnetism of Helium	5
Cryostat	6
Magnets	9
Persistency Switch	12
Charging Current Leads	15
Coil Tests–Damage to the First Satellite Coil	16
Final Coil Test–Rewound Satellite Coil	19
Conclusions and Recommendations	20
Acknowledgments	21
References	22
Table I	24
Table II	25
Figure Captions	26

SUPERCONDUCTING MAGNET AND CRYOSTAT FOR A SPACE APPLICATION*

W. L. Pope, G. F. Smoot, and L. H. Smith†
Lawrence Berkeley Laboratory‡ and Space Sciences Laboratory
University of California, Berkeley, California

and

C. E. Taylor

Lawrence Livermore Laboratory‡, Livermore, California

INTRODUCTION

Most terrestrial high-energy particle experiments have measured particle momenta (energies) with magnetic spectrometers because they are accurate and simply calibrated. Cosmic ray experiments at the top of the atmosphere were unable to use such devices until recent years, because weight and power requirements render conventional magnet systems impractical for balloons and satellites.

By 1963, superconducting technology could produce reliable magnets. Professor Luis Alvarez then suggested that light-weight, high-field superconducting magnetic spectrometers could be applied to high-energy cosmic ray experiments. Furthermore, the magnetic spectrometer provides the unique means of measuring the sign of the cosmic rays, thus permitting the separation of electrons and positrons and of nuclei and antinuclei.

A few years later, the Alvarez group at Berkeley developed a balloon-borne single-coil superconducting magnetic spectrometer. A description of this apparatus and its first flight has already appeared[1]. Since that

*This work supported by NASA Contracts NAS8-27408 and NAS9-7801.
†Presently at Science Applications, Inc., Sunnyvale, California.
‡An AEC-supported Laboratory.

flight the spectrometer has been reflown for longer exposure. Encouraged by these initial scientific and technical successes we have designed, built, and flown a second-generation superconducting magnetic spectrometer to search for antimatter, to measure the abundance and spectra of the highly charged cosmic ray nuclei, and finally to separate electrons and positrons.

This technique has yielded such a rich dividend of cosmic ray measurements, it has only been natural to look forward to the exploitation of superconducting magnets in satellites.

We have built and tested a prototype superconducting coil designed for an orbiting magnetic spectrometer with a one-year mission. This coil has been integrated into an engineering model cryostat currently being fabricated by the AiResearch division of the Garrett Corporation in Torrance, California. In August 1974, when the cryostat is completed, we will transfer it to the Johnson Space Center in Houston, Texas, and conduct operational tests on the entire system.

Because of the high reliability and long helium storage time requirements of orbital missions, the performance characteristics of the magnet-cryostat system are of vital interest to everyone who may ultimately use a superconducting magnet or cryogenic system in a space application. Here we discuss the design and test history of the satellite coil and trace its evolution from the first- and second-generation balloon-borne superconducting magnets. These magnets are of particular interest because they have been successfully operated in field conditions. The cryostat-magnet currently being fabricated represents (except for shell weight) state-of-the-art aerospace engineering.

SPECTROMETER CONFIGURATION

Figure 1 is a schematic drawing of our design for an orbiting magnetic spectrometer. A charged particle traversing the spectrometer is deflected through an angle proportional to the line integral of the magnetic field ($\int \vec{B} x d\vec{l}$) and inversely proportional to its momentum per unit charge. The spectrometer consists of three major systems: (1) scintillators to define the entering beam of particles and to measure their charges, (2) spatial detectors to measure the trajectories and thus deflection angle, and (3) a superconducting magnet to provide the deflecting field.

Our group has acquired considerable skill in building previous superconducting magnets of the same generic type for use in balloon-borne spectrometers, and these magnets have performed extremely well during launch and flight. The cryostats for these balloon gondola magnets, however, were small and rugged and did not require extremely high thermal performance because of the short duration flights. The magnets were charged and the current made persistent prior to launch.

In the satellite cryostat, the magnet must be integrated in such a way that it can be charged remotely in space with limited power, provide a very strong external magnetic field but a limited fringe field, operate in any attitude, transition non-catastrophically, have a net torque in the earth's field of less than 0.05 ft-lb (the torque on a single coil would be about 50 ft-lb), and do all this reliably for a year with a limited dollar and weight budget.

The magnet consists of a pair of relatively large yet compact coils connected in series and mounted inside the cryostat with one coil as near to the spatial detector array as possible. The near coil provides the field to deflect the cosmic rays. The other coil is arranged with an opposing field to

cancel the dipole interaction with the earth's magnetic field, so as not to influence spacecraft guidance and attitude control, and to decrease the magnetic fringe field outside the spatial detector region, so as not to affect other experiments too severely.

The effective field in the spatial detector region falls off quite rapidly with axial distance from the near coil, so it is extremely important to minimize the distance between the near coil and the inner near edge of the spatial detectors to insure a sufficiently high $\int \vec{B} x d\vec{l}$ to measure accurately the higher energy events. This, of course, decreases the effectiveness of the cryostat thermal protection system and reduces cryostat and magnet lifetimes. For example, increasing the coil-to-detector distance by one inch and adding a third vapor-cooled shield might have increased the cryostat lifetime by another 10 to 12% with a very modest weight increase, but would reduce the number of accurately measured, very-high-energy events by 20%.

Similarly, relatively flat cryostat heads decrease the coil-to-detector distance, making available the very best resolution, which is concentrated in the high-field region near the coil. Flattening the heads increases their weight but allows larger-diameter coils to be used which, for a given weight of wire, produce a larger $\int \vec{B} x d\vec{l}$ in the spatial detector region.

The stiffness of the cryostat pressure vessel and vapor-cooled shield suspension system also influences the coil-to-detector distance. Our fiberglass pressure vessel supports cannot simply be designed with tensile stress criteria to minimize cross section and thus heat leak, because the elastic modulus is too low to keep launch load factors or vibration amplitudes tolerable. Also the designer cannot add arbitrarily large clearance between the multilayer insulation and the shells to avoid MLI compression. We conducted a study of these and other factors

to maximize the $\int \vec{B} x d\vec{l}$ and exposure time for a given overall weight of the magnet and cryostat.

DIAMAGNETISM OF HELIUM

Operation of a superconducting magnet in a weightless environment poses a unique operational difficulty not encountered in the laboratory. Helium is diamagnetic and is therefore repelled by magnetic fields.

The magnetic force on a unit mass of a substance with magnetic susceptibility, χ_m, is

$$\vec{F} = \chi_m (\vec{B} \cdot \vec{\nabla}) \vec{B}$$

where B is the magnetic field strength. For helium $\chi_m \simeq -0.47 \times 10^{-6}$ dynes/gram $\times$cm/gauss[2]. Typical values for the surface of the satellite coil are: B = 70 kG and ∇B = -10 kG/cm. So the magnetic body force on the helium in the vicinity of the coil is:

$$F = 330 \text{ dynes/gram}^{[2]}.$$

This force corresponds to about one third the acceleration of gravity at the earth's surface.

In normal laboratory situations a very moderate liquid helium level, about one centimeter in this case, has sufficient head to maintain contact with the magnet. On an orbiting satellite the only forces acting to keep the liquid helium in contact with the coil are surface tension and accelerations of the spacecraft. For this coil, surface tension and diamagnetism become comparable for distances from the magnet larger than about 100 cm.

A supercritical cryostat could maintain a magnet in the superconducting mode. However, because of the helium susceptibility, stratification and reduced heat transfer during charging could be a serious problem. In addition, the required tank pressure control system would be overly complicated.

A sponge or wick type enclosure could be built around the coils to insure liquid contact and to provide refrigeration through the helium's latent heat of vaporization. Liquid helium has a very low surface tension, $\lesssim 0.4$ dynes/cm, so such an enclosure must be very dense and would thus add appreciable weight to the system.

Our superconducting magnetic spectrometer experiment was located at one end of the spacecraft* to minimize the magnetic shielding required on the spacecraft control moment gyroscopes and to allow other experiments with highly field-sensitive equipment to be at the opposite end. In this orientation the cryostat-magnet is far enough from the spacecraft center of mass to use spacecraft rotation to settle the fluid.

Once the magnet is charged the diamagnetism of helium can be used advantageously to extend the cryostat lifetime. Simply placing the mouth of the vent near the magnet, where the product of magnetic field and field gradient are maximum, results in phase separation and improved performance. For the cryostat described below the operational lifetime for vapor expulsion is about 25% longer than for liquid expulsion.

CRYOSTAT

When we proposed our experiment to NASA for the High Energy Astronomical Observatory (HEAO) series of scientific flights[3] projected for 1975-1977, cryogenic refrigerator development was not yet at the stage to warrant serious consideration because of limited lifetime reliability. We proposed that the magnet could be sustained for a year in an efficient, hard vacuum shell, helium cryostat designed to survive the rigors of launch

---

*In January 1973 the HEAO satellite program was redirected and our experiment postponed indefinitely or until the space shuttle missions.

and to meet the physics requirements. The cryostat fluid was to be subcritical helium. At that time various fluid phase control devices (not including diamagnetic separators) had been studied and ground tested, but NASA had not yet flown either a subcritical helium cryostat or a superconducting magnet. In addition we decided not to include shields cooled by secondary solid or liquid cryogens, such as the liquid nitrogen in our second-generation balloon-borne cryostat, but instead we would simply employ vapor-cooled shields to take advantage of the refrigeration provided by the helium as it warms from 4°K to its exit temperature.

After initial cryogenic feasibility studies by Ball Brothers[4], we developed a relatively sophisticated computer design program for high vacuum and multilayer insulated, subcritical cryostats with multiple vapor-cooled shields. Because of the influence of the cryostat design on the overall spectrometer performance, additional programs were developed to study the cryostat-magnet-detector interfaces. A 2900 lb flight cryostat magnet system design was generated[5].

In May 1972 we put Garrett AiResearch under contract to design and build a thermal model cryostat identical to the proposed flight cryostat except for shell thickness and containing only one superconducting coil. Figure 2 is a photograph of the thermal model cryostat as it existed in February 1974 during the initial shield fitting operation. This 93.5 inch long cryostat has a 72 inch outer diameter and contains about 950 lb of liquid helium with a ~ 5% ullage. It has high vacuum and multilayer insulation and two .040 inch thick aluminum vapor cooled shields. The innermost vapor-cooled shield acts as a boiler, or external thermodynamic phase separator, in a liquid expulsion mode.

The AiResearch cryostat has a relatively stiff array of 16 fiberglass-epoxy band supports between eight equally spaced attach points on a central outer shell girth ring and four attachment points at each end of the pressure vessel. The supports are roughly 27 inches long with a total cross-sectional area of about 1.36 in^2. The band supports are preloaded in tension to about 70,000 psi to insure a relatively high stress after cool-down. With a flight weight pressure vessel and two coils, the cryostat minimum axial natural frequency would be about 29 to 30 Hertz, which would keep maximum load factors below 10 G's on a Titan IIIB launch. The supports are mechanically and thermally connected to the vapor-cooled shields to intercept some of the conduction heat which would otherwise flow directly to the pressure vessel.

The pressure vessel is to be insulated with one layer of low-emittance foil, whereas the inner and outer vapor-cooled shields are to be wrapped with 40 and 120 layers respectively of 1/4 mil double-aluminized Mylar with a 4 mil thick Dacron net spacer applied at a layer density of about 66 layers/inch maximum. The thermal protection system annulus is 4.50 inches everywhere except at the spatial detector end where the coil is mounted. Here the minimum annulus dimension is 3.0 inches on the axis between the torrispherical heads, which approximate 2/1 ellipsoids.

The cryostat has a 100 inch long stainless steel fill line, a 142 inch long fill vent line, and a 150 ft long shield heat exchanger line. The shield line starts at a tee, approximately 61 inches from the pressure vessel, in the fill-vent line on the boiler shield, is wrapped in serpentine fashion over the shields, and terminates at the tank pressure regulator outside the outer shell.

All instrumentation to the cryostat pressure vessel is contained in either the fill line or the fill-vent line, thus eliminating the need for cold

vacuum-tight electrical feed-throughs.

MAGNETS

Table I is a more complete description of the prototype satellite coil. Here we also have included, for comparisons, details of the coils from our two balloon-borne spectrometers. The satellite coil was originally wound and tested with 11,608 total turns (96 layers) of NbTi twisted multicore wire. This coil developed shorts on cool-down and was damaged after transitions at currents up to 107 amps. It was rewound using some new wire and a different cooling passage design which eliminated axial cooling passages. This existing coil has fewer turns simply because we ran into a bad batch of wire while rewinding, and there was insufficient time to obtain more wire without seriously affecting the cryostat schedule.

Several key features can be noted in the coils described in Table I. These features are mainly dictated by requirements of the application, such as: 1) high field at the wire and high current density[6], 2) moderate size weight and stored energy, and 3) relatively low current. The coils are also rugged and reliable.

If a small region in these high-current-density coils transitions to normal conductivity because of loss of cooling, excessive currents, wire movements, etc., the wire will heat very rapidly. Unless the current is quickly reduced, local overheating can occur. These coils have very high inductance because of the requirement for low current. This makes rapid coil discharge to an external load, such as a series resistor, impossible because of the high voltages required. Therefore, in case of accidental discharge, most of the magnetic energy must be dissipated as Joule heating within the coil windings. It is important to design the coil so that any local "hot-spot" or normal region will cause the entire coil to become normal in a time which is short enough

to prevent local overheating. This will result in most of the magnetic energy being dissipated nearly uniformly throughout the windings. The spread of a normal region throughout a coil is a complex process to analyze, because it involves heat conduction across layers, along the wire and turn-to-turn, heat transfer by helium in the windings (which has become heated and, therefore, pressurized), and by Joule heating caused by short-circuit currents which may flow between turns during rapid discharge. The latter effect is due to the use of a semiconducting material for turn-turn insulation. We do not know the details of the transition process in the coils. However, measurement of discharge characteristics shows that at design current, these coils become normal in less than about one second, and that the energy does dissipate nearly uniformly throughout the windings.

This design philosophy results in a system which is "passively" safe and does not need an active protection system. If these coils were constructed to be more stable, for example by using a better cooling geometry, the rate of "going-normal" might be reduced to a degree which would cause the coil to be damaged on discharge. Thus it is desirable to have the coils just stable enough to permit predictable and reliable charging and operation, but unstable to large disturbances.

The first two magnets built have been used successfully on a total of six balloon flights over a period of three years and in only one instance required repair or rework. The first cryostat had to be rebuilt after its first flight due to damage on landing impact, and for still unknown reasons the coil could only reach currents up to 80 amps after the cryostat was rebuilt for its second and third (last) flights.

The second magnet is so stable that it once remained persistent through the parachute opening shocks during descent and mountain-side landing even though much of the gondola shell was severely damaged on impact (at accelerations substantially greater than 5 G's).

The second coil has been driven normal without damage 10 times from currents between 104 and 117 amps. The rewound satellite coil is virtually identical to the second balloon coil in all pertinent details except overall physical size. This coil has been made persistent three times at currents between 100 and 110 amps but has not yet been driven normal; instead, it was discharged through external diodes. Because we had to deliver the coil to AiResearch for installation in the thermal model cryostat within a month after rewinding, we didn't want to risk damaging the coil by going to higher currents at that time. The design current is 120 amps.

In addition to measuring overall thermal performance and coil charging behavior, one important objective of the tests (to be conducted at Johnson Space Center in the fall of 1974) is the measurement of transient pressures and the associated fluid losses in the cryostat as a result of induced magnet transitions at various stored energy levels up to about one megajoule and for at least two fill fractions. This information is difficult to acquire analytically because of the assumptions that must be made about fluid mixing, but it is relevant to the pressure vessel design pressure, and therefore the weight, of similar future devices. Transition pressure-rise is seldom critical in the design of laboratory coil cryostats, because it is usually not difficult to build in a suitable low-impedance vent; however, in an orbiting superconducting magnetic spectrometer cryostat, it is necessary to contain a transition with minimal fluid loss so that the magnet can be recharged and the experiment continued. The thermal model cryostat pressure vessel has been statically tested to 105 psi at room temperature and should be able to withstand about 150 psi at 4°K.

PERSISTENCY SWITCH

Power is limited in satellites and balloons; therefore, rather than supply current continuously to the magnet from an external source we have chosen to complete the superconducting circuit inside the dewar and keep the magnet charged with a persistent current. However, to charge or discharge the magnet it is necessary to be able to open and close the superconducting circuit. We accomplish this by using a section of superconductor called the 'persistency switch,' which can be switched from its superconducting to normal-resistance state by means of a heater. This switch is mounted in parallel with the coil in the coil-charge lead circuit.

Desirable characteristics of the persistency switch for these high inductance coils are: 1) relatively high resistance in the normal state in order to minimize current in the switch during charging of the coil (about 10 volts maximum is required to charge these high-inductance coils in times of about one hour); 2) low switch inductance in order to minimize: energy stored in the switch, stray field of the switch, and switching time. A copper-nickel matrix composite wire was chosen to provide the high normal-state resistance with a one-to-one matrix-to-superconductor ratio for electrical stability. Half of the superconductor turns are reverse wound to keep the switch inductance low. The persistency switch, which is always connected across the coil terminals, is designed to carry the coil current during a discharge without overheating, assuming that it will be driven normal at the same time as the coil. Construction details and measured characteristics of the completed switch are shown in Table II.

The switch is very stable. It is reasonably well insulated thermally. When the applied voltage is above 0.25 volts, enough self-heating occurs to prevent recooling to superconducting temperatures. Since the coil is charged

in the range of one to six volts this means the heater is not needed during charging, except to initially heat the switch until it becomes normal.

These persistency switches have been tested repeatedly to 150 amps and occasionally to 200 amps at zero field. The balloon switch and magnet have been kept persistent several times at currents over 110 amps for a couple of weeks at a time with no failures and no measureable current loss (less than 1%).

It is important that there be no appreciable current loss due to either the switch or magnet for two reasons. First, we want to maintain the high magnetic field for one year. Second, since the satellite coils would each contain about one megajoule, a significant decay rate would generate too much heat within the cryostat. A maximum loss rate of the magnetic field energy of about 10% per year is tolerable for maintaining required experimental accuracy. This would increase the cryostat heat input by about 2.4%.

Persistency Switch Details

The persistency switch is a 4.0 inch long by 2.5 inch outer diameter solenoid of superconducting wire interwound with two separate Manganin wire heater coils. One heater is for redundancy. The coil form is a 1.75 inch outer diameter Micarta tube with 0.125 inch thick walls.

The superconductor is 509 turns of Kryoconductor No. 32 which is a 0.030 inch diameter Nb-Ti multicore superconducting wire imbedded in a Cu-Ni matrix with matrix-to-superconductor ratio of one-to-one. This wire has 500 Nb-Ti filaments, one twist per inch, and is insulated with Formvar. Two layers of superconductor are wound in a clockwise direction and two layers in a counter-clockwise direction. Each layer of wire is insulated with two layers of 5 mil thick glass cloth. This construction allows enough

cooling when immersed in liquid helium to be stable. Yet, only a small heat input is required to keep the superconductor above the transition temperature of about 9° K.

Each side of the switch is connected to the coil by a single strand of the Kryoconductor No. 32 plus two parallel strands of Kryoconductor No. 157 (Nb-Ti composite with a copper-to-superconductor ratio of 1.8 to 1, 180 filaments with three twists per inch and copper oxide insulation) soldered together with indium in a compact three-wire bundle.

CHARGING CURRENT LEADS

A very important reason for using small-diameter superconducting wire in these coils is to minimize the coil current and, therefore, to minimize the steady state heat leak due to the magnet charging leads. While using larger wire or ribbon could have reduced winding costs significantly, the charge leads would have to be larger to carry the increased current necessary to produce the same magnetic field. We do not disconnect the leads after charging, since complete thermal disconnection is much more complicated an operation than electrical disconnection and we want to maintain high system reliability and magnet protection. Also, 100 ampere power supplies are much more feasible than 1000 ampere power supplies in satellites and in the field during balloon flight operations.

There are four insulated charge leads (two are spares) about 3.6 meters long which run down the inside of the fill-vent line to the pressure vessel. The innermost 1.5 m of the leads is cooled by steady state boil-off from the cryostat before it is routed to the vapor-cooled shields. The lead cross section tapers down in three steps from #16 AWG copper (1.5 m long) at the warm end, #20 AWG high purity copper (1.5 meters) in the middle, to the final section of 0.8 mm diameter superconducting wire of 1.8/1 twisted Nb-Ti multicore 0.6 m long.

We have measured the zero-current heat leak from the four charge leads in a vacuum-jacketed tube, which simulates the fill-vent line, as a function of the helium vapor coolant flow rate. Then using our cryostat design program, we determined the baseline cryostat vapor expulsion flow rate and found that the four charge leads will contribute a steady state heat leak of 0.110 watts directly to the pressure vessel. The addition of the magnet charge leads and instrumentation increases the cryostat vapor expulsion

mass flow by 14%, even though they represent 42% of the final direct heat leak to the pressure vessel.

We have tested the current-carrying capacity of the leads and found that a coolant mass flow rate of about 2.5 kg/hr (5.5 lb/hr) is required to prevent thermal instability at 130 amps. This flow can be established by several methods, including: controlling the discharge pressure of the vent tube, or controlling the vapor pressure of the helium by using an auxiliary heater in combination with other heat sources such as eddy-current heating. Details of the charge leads may be found in the companion paper[7].

COIL TESTS—DAMAGE TO THE FIRST SATELLITE COIL

In the first winding of the satellite coil, the wrapping details were slightly different than for the two previous coils. These deviations from previous practice were made to see what influence a wicking system, similar conceptually to what might ultimately be used on a superconducting magnet in a subcritical cryostat in zero-G's, would have on the overall charging and operational characteristics of the coil.

After initially winding two layers of fiberglass cloth on the 7079-T6 aluminum coil form, we first wound a layer of superconducting wire and then added a layer of Mylar strips, $0.50 \times 0.0075 \times 3.75$ inches, followed by two layers of fiberglass cloth. We repeated this process for each of the 96 layers. There were 0.12-inch wide spaces between the Mylar strips to provide for increased axial fluid circulation between wire layers. In addition the coil had a liquid wicking system installed in the radial cooling slots in the textolite coil end spacer.

The wicks consisted of ten twisted strands of ordinary cotton string (kite string) installed in each of the 180 radial slots in the uppermost coil end spacer. The string extended from one end of the slots (innermost wire

layer) to the coil outside diameter and then vertically downward to the bottom of the liquid helium test vessel. The upper slotted end spacer was chosen for the location of the wicks for the first test; we felt this location would produce the most significant negative impact on coil venting during charging.

We wrapped two layers of 15 mil diameter stainless steel safety wire around the outside of the coil to keep the last layers in place. Outside the safety wire we added 105 turns of #29 gage copper wire, which we call a $\dot{B}$ sensor, as an induction loop to measure the time rate of change in the magnetic field.

On the first attempt to charge the coil the power supply voltage was set at 5.00 volts and we noticed a peculiar periodic oscillation on the $\dot{B}$ sensor (see Fig. 4) whose frequency increased with increasing charge voltage. In addition the measured coil self inductance was about 135 henries (roughly 10% lower than its predicted value). After about 30 minutes of charging the coil at 5 volts, it transitioned at 71 amps and decayed in about 4 sec.

The magnet was charged again at 5.25 volts and then made persistent at 50 amps for about one minute. The charge voltage was reduced to 3.0 volts and the magnet was charged to 100 amps and made persistent. At 3.0 volts the $\dot{B}$ coil oscillations previously noted disappeared and the measured inductance was 150 henries as originally predicted.

After about 4 minutes we continued charging at 3.0 volts and the coil transitioned at 107 amps. After this the coil was transitioned ten times at currents between 10 and 52.6 amps using various charge voltages between 1.0 and 5.0 volts. The peculiar $\dot{B}$ oscillations were present during the whole latter period and the coil was particularly sensitive to charge voltage above about 1.0 volt.

We discontinued the test, allowed the coil to warm to room temperature, and removed it from the test vessel for examination. No visible

superficial damage was evident. The coil resistance was measured and found to be 1204 Ω, 5.8% less than the 1278 Ω measured at the end of the winding operation.

We removed the $\dot{B}$ coil, the safety wire, and then the 96th and 95th layer of the coil. The 95th layer of wire was visibly burned in a small region (approximately 15 turns wide by 0.3 inch long), and centered between two Mylar strips at the top edge of the coil adjacent to the coil lead-in wire (which was imbedded in a milled shot in the textolite end spacer and separated from the outermost turn by the fiberglass cloth). The 94th wire layer showed no visible signs of overheating.

At that time it appeared quite possible that all that was wrong with the coil was the two shorted outermost layers which existed at the beginning of the test. We speculated that the short occurred between the last turn of layer 96 (a soldered splice joint) and the first turn of layer 95 due to fracture of the glass cloth between layers as the superconducting wire redistributed itself when the smaller diameter stainless steel safety wire layers were installed. The fiberglass fractured presumably at the coil lead-in wire slot simply because this was the only jagged edged discontinuity of its kind in the two textolite end spacers.

We remade the coil lead-out splice at the 94th layers, rewound the stainless steel safety wire and $\dot{B}$ sensor, and installed the coil in the test vessel for another test. During this second test the coil exhibited similar failure symptoms to those on the first test.

We warmed and unwound the coil completely, all the while inspecting it for damage. We found several defective areas with the following features: the overheated areas were adjacent to the uppermost coil edge (the wick side) at splice terminations and the glass cloth showed evidence of prior fracture.

FINAL COIL TEST-REWOUND SATELLITE COIL

It is well known that glass cloth will easily fracture when folded parallel to the weave. We found that we could largely overcome this inherent limitation of folding fracture simply by cutting the cloth spacer on about a 45° bias and not applying high wedging forces while pressing the wire into place at the end of each layer.

We also found that we could improve the splice joints by reducing the joint length to about six inches less than a full turn to allow the insertion of gradually tapered end fillers. We placed these Teflon wedges at the ends of each piece of the superconductor and the ends of the two turns of monofilament nylon fishing line interwound with the splice. Instead of indium we used ordinary 50/50 Pb Sn soft solder and noncorroding flux to make the splice joints.

With the time that was available to rewind and test the coil, only one test would be possible. Much of the wire had to be reused, and because several bare spots had developed in the oxide, it had to be stripped and recoated by the manufacturer. Although we could not definitely say that either the Mylar strips between layers or the wick system contributed to the earlier failures, these were departures from previous proven techniques and were eliminated. It is possible that the well ventilated coil, with Mylar spaces between each layer, was sufficiently more stable than the nonventilated coils, that it resulted in uneven dissipation of energy when discharging. This may have contributed to the damage which occurred.

A multitude of other construction details were executed as carefully as possible. Instrumentation and control features were improved and expanded and documentation was roughly tripled over previous coils.

After this careful rewinding we tested the coil again and it performed well, even the usual small flux jump activity observed on the $\dot{B}$ sensor was virtually nonexistent.

CONCLUSION AND RECOMMENDATIONS

Large superconducting coils with low but persistent currents have proven themselves to be rugged and reliable in our mobile balloon-flight operations. We have designed a similar type magnet-cryostat system for a satellite experiment which we believe can operate satisfactorily for one year in orbit.

There are two modifications in the construction of these coils that we are considering. We would avoid using glass cloth as the spacer in the coil if another material such as Dacron proved to have adequate stiffness. Recent developments in potting techniques for superconducting coils[8] makes a potted coil also appear attractive. The potted structure provides electrical isolation and holds the superconducting wire rigidly in place, which should provide improved charging stability.

The potting material remains in contact with the superconducting wire and is not repelled like the diamagnetic liquid helium. Although longer charging times may be required because of reduced heat transfer at the wire, operation in zero G's would be a much smaller extrapolation from laboratory test conditions than tests of liquid-cooled windings in one G.

Superconducting magnetic spectrometers are valuable new instruments for cosmic ray research in space which undoubtedly will be aboard future Space Shuttle flights[9]. Information gained through operational and performance testing of the thermal model cryostat-magnet system described can play an extremely valuable role in the design of such future systems.

ACKNOWLEDGMENTS

We thank R. Golden, W. Craddock, W. Chandler, J. Smithson, and their group at Johnson Space Center in Houston for arranging for the tests of this hardware and for supporting this effort, along with NASA headquarters and MSFC in Huntsville.

In addition, we express our appreciation to the members of our group– L. Alvarez, J. Angevine, J. Aymong, A. Buffington, H. Dougherty, J. Gibson, D. Heine, C. Orth, and J. Yamada for their support and assistance in this project. We also acknowledge the role played by J. Nestor and K. Leung in the design of the second balloon magnet and cryostat.

REFERENCES

1. Superconducting Magnetic Spectrometer for Cosmic Ray Nuclei, L. H. Smith et. al., Rev. Sci. Instrum. 43, 1, No.1 (1972).
2. We have tested these diamagnetic effects for water and other substances and the results along with the calculations for helium are documented in a group technical note: Diamagnetic Effects of Helium in the HEAO Spacecraft, G. F. Smoot, NASA-HEAO Note No. 208, University of California, Berkeley, 11/10/72.
3. Superconducting Magnetic Spectrometer Experiment for HEAO Mission B, University of California, Berkeley, Space Sciences Laboratory Series 13, Issue 11, 2/15/72.
4. Final Report, Cryogenics Study for Superconducting Magnets, R. N. Herring, Ball Brothers Research Corporation, Report No. F70-15, 12/18/70.
5. Superconducting Magnet Cryostat for HEAO-B Cosmic Ray Experiment, BCR-5, W. L. Pope, Proceedings of Cryogenic Workshop, pp. 529-579, (held at) NASA MSGC, Huntsville, Alabama, March 29-30, 1972.
6. C. N. Whetstone and R. W. Boom, "Nucleate Cooling Stability for Superconductor Normal Metal Composite Conductors in Liquid Helium," in Advances in Cryogenic Engineering, K. D. Timmerhaus (Ed.), Vol. 13, pp. 68 79, Plenum Press, New York (1968).
7. Low Heat Leak Current Leads for Intermittant Use, Advances in Cryogenic Engineering, Vol. 20.
8. D. N. Cornish (private communication) Culham Laboratory, Berkshire, England.

9. John E. Naugle, Research with the Space Shuttle, Physics Today, pp. 30-37, Nov. 1973. This article is a concise summary of the work of the NASA Shuttle Payload Planning Working Groups which is contained in a ten-volume set of reports published by NASA in May 1973.

Table I. Coil Parameters

Coil	Satellite Coil (1973)	Second Balloon Coil (1972)	First Balloon Coil (1968)
Outer diam., D_o (cm)	84.5	63.34	60.0
Inner diam., D_i (cm)	68.2	35.06	30.0
Length, L (cm)	9.52	8.05	6.35
Total magnet wt. (lb)	330	230	215
Total amp turns	1.13×10^6 **	1.73×10^6	1.43×10^6
Apparent current density, J_A (A/cm^2)	14,600	15,200	15,000
Max. operational current, I_m (A)	110*	117	105 (80)‡
Design current, I_o (A)	120	120	110
Max. des. field @ wire, H_m (kG)	70.	70.	78.
Stored energy (MJ)	.725**	.821	.264‡
Meas. inductance, L (henries)	119.5	120.	65.
Mean useful magnetic line integral $\langle \int Bxdl \rangle$ (kG-m)	5.0	5.1	4.1
Operational life with one cryostat filling (vapor expulsion)	>1.0 yr	4 days (w/LN_2 shield)	1 day

*Max. operational current not yet determined (120 A est.); TBD in Fall 1974 at JSC.

**Based on existing coil (86 layers) at 110 A current.

‡Only 80 A achieved after cryostat rebuild (see text).

Superconductor type	Nb-Ti, Cu-clad	Nb-Ti, Cu-clad	Nb-48% Ti, Cu-clad
Trade name	"Kryoconductor"	"Kryoconductor"	
Manufacturer	Magnetic Corp. of America	Magnetic Corp. of America	National Research Corp.
Number of filaments	180	180	1
Copper-to-superconductor ratio	1.8/1	1.8/1	3.0/1
Wire insulation (turn-to-turn)	Cu Oxide (Ebanol C)	Cu Oxide (Ebanol C)	Cu Oxide
Layer-layer insulation, 0.2mm glass cloth	2 layers	2 layers	2 layers
Winding tension (lb)	7.0-9.0	6.0-8.0	15.
Splice length, turns	0.94	0.98	1.98
Total turns	10285*	14886	12989

Coil region	Inner	Middle	Outer	Inner	Outer	Whole Coil
Turns distribution	880	947	8538*	1787	13,099	
Layer distribution	8	8	70*	20	128	172
Wire diameter (mm)	.890	.812	.762	.890	.762	.762
Twists per inch	3	3	3	3	4	

*Original design called for 80 layers in outer region, but we ran out of wire (see text).

Table II. Persistency Switch Details

A. Construction

Layer No.	Material	No. of Turns	
1	Superconductor	128	
2	#30 Manganin	133	Primary heater
3	Superconductor	127.5	
	REVERSE WIND SUPERCONDUCTOR		
4	Superconductor	127	
5	#30 Manganin	132	Primary heater
6	Superconductor	126	
7	#33 Manganin	130	auxiliary heater

B. Measured Properties

Component	Resistance (Ω) 290K	77K	4° K
Superconducting switch	57.7	43.3	≈ 10 (≈ 10° K)
Primary heater	611	573	360
Auxiliary heater	335	317	200

FIGURE CAPTIONS

Fig. 1: Orbiting superconducting magnetic spectrometer for measuring cosmic rays as proposed for the high-energy astronomical observatory.

LEGEND:

A, B = Trigger scintillators

C = spatial detectors

D = anti-coincidence shield

E = superconducting coil

F = opposing coil

G = coil support tube

H = He cryostat vacuum shell

I = cryostat pressure vessel

J = vapor cooled shields (multilayer insulated)

K = support girth ring and spacecraft mount

L = spacecraft mount ring

M = photomultiplier magnetic shields.

Fig. 2: Photograph of the thermal model cryostat taken in February 1974 as the vapor-cooled shield segments were being prefitted prior to cleaning for final assembly. The trunion mount allows the tank to be rotated about a horizontal axis for inverted testing. (Courtesy of Garrett AiResearch Manufacturing Division, Los Angeles, California.)

Fig. 3: Photograph of the prototype satellite superconducting coil. The outermost wire layers are wrapped with one layer of Mylar sheet. Edge cooling is provided by the 180 radial slots milled into Textolite coil end spacers.

Fig. 4: $\dot{B}$ sensor response for coil with shorted turns. This is how the response appeared after the initial transition; before that, only 4 and 5 volts showed this effect. Note that the period decreases with increasing magnet current.

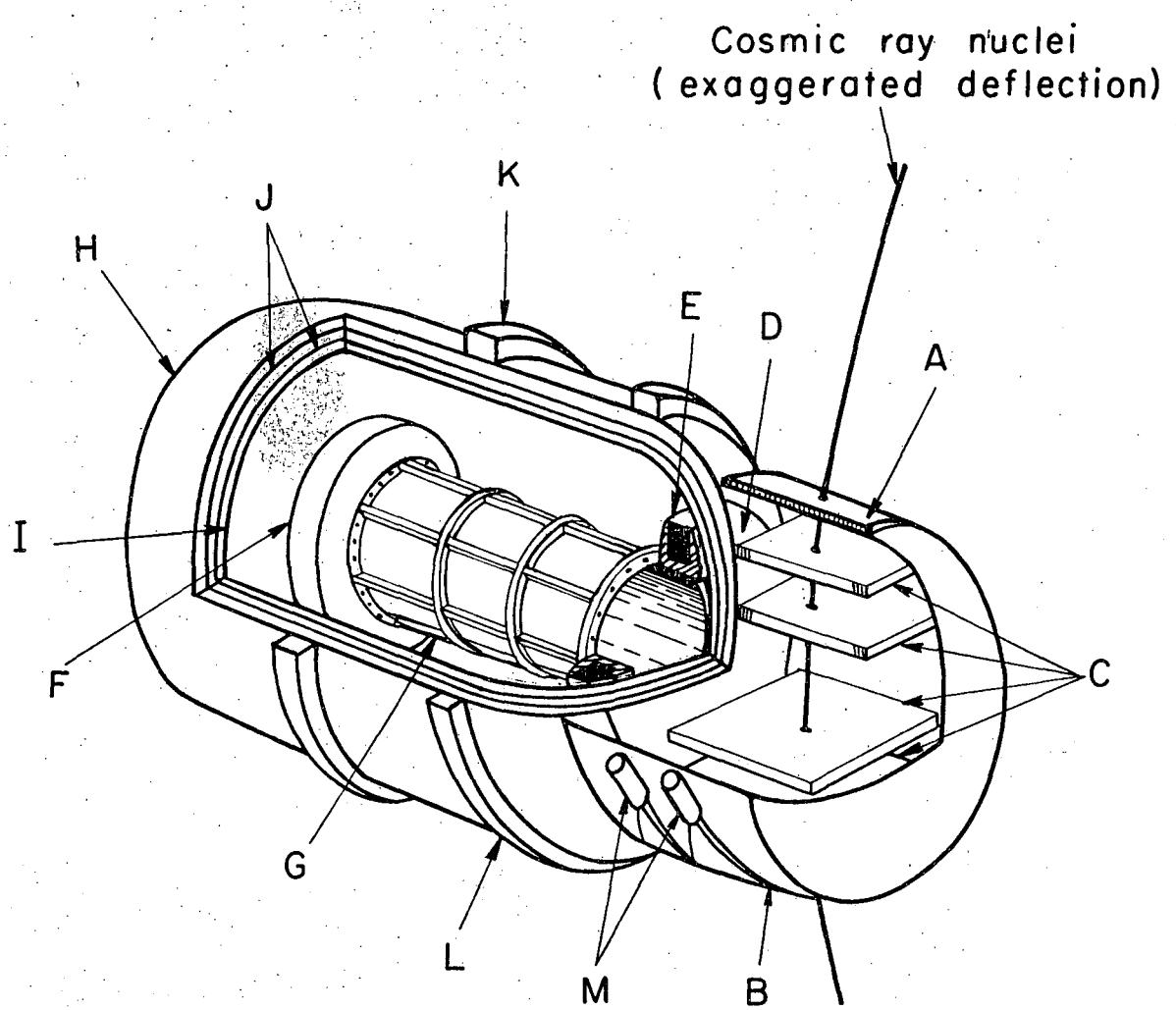

Fig. 1 XBL741-2262

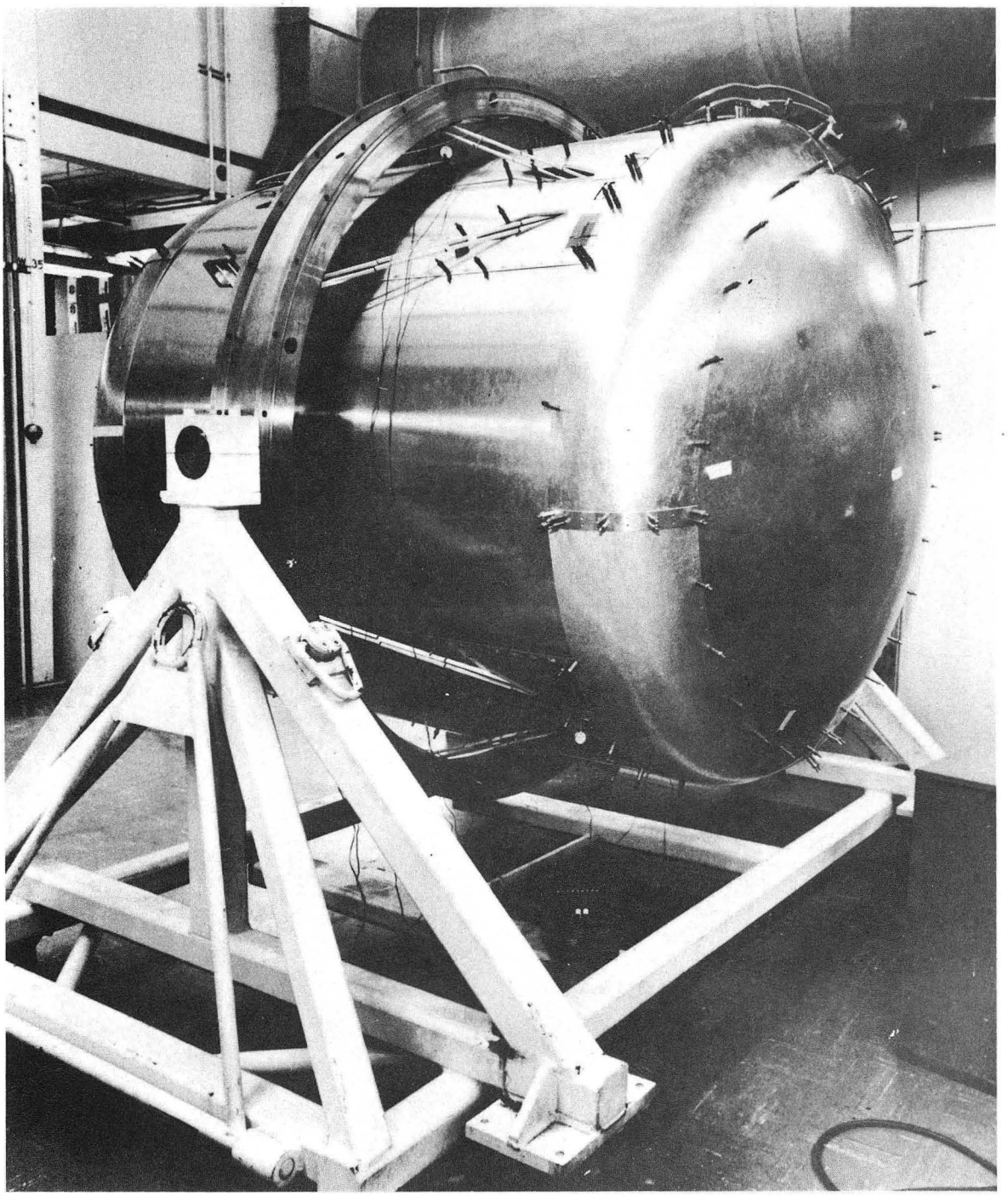

Fig. 2 XBB 744-2155

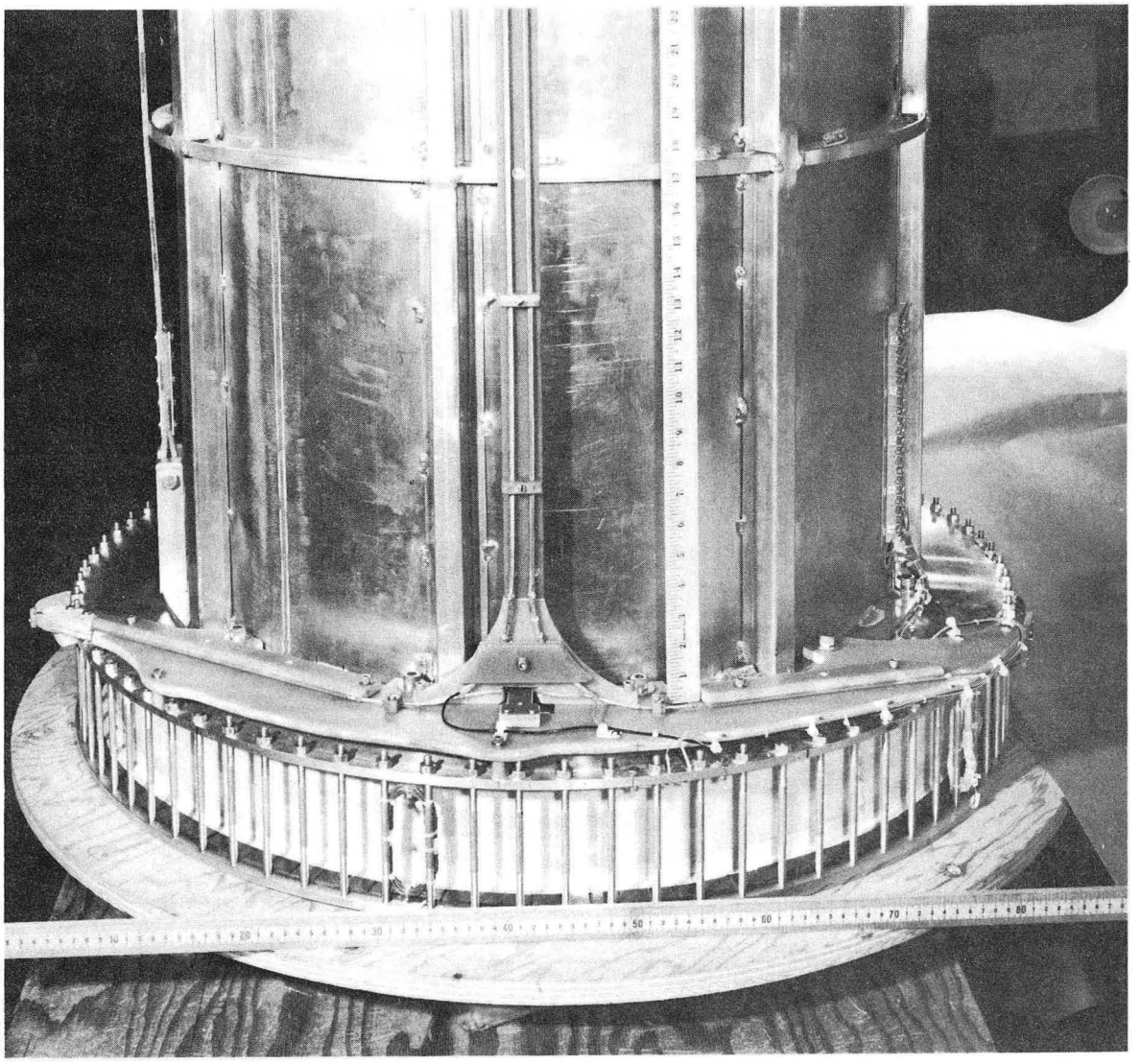

Fig. 3 XBB 737-4509

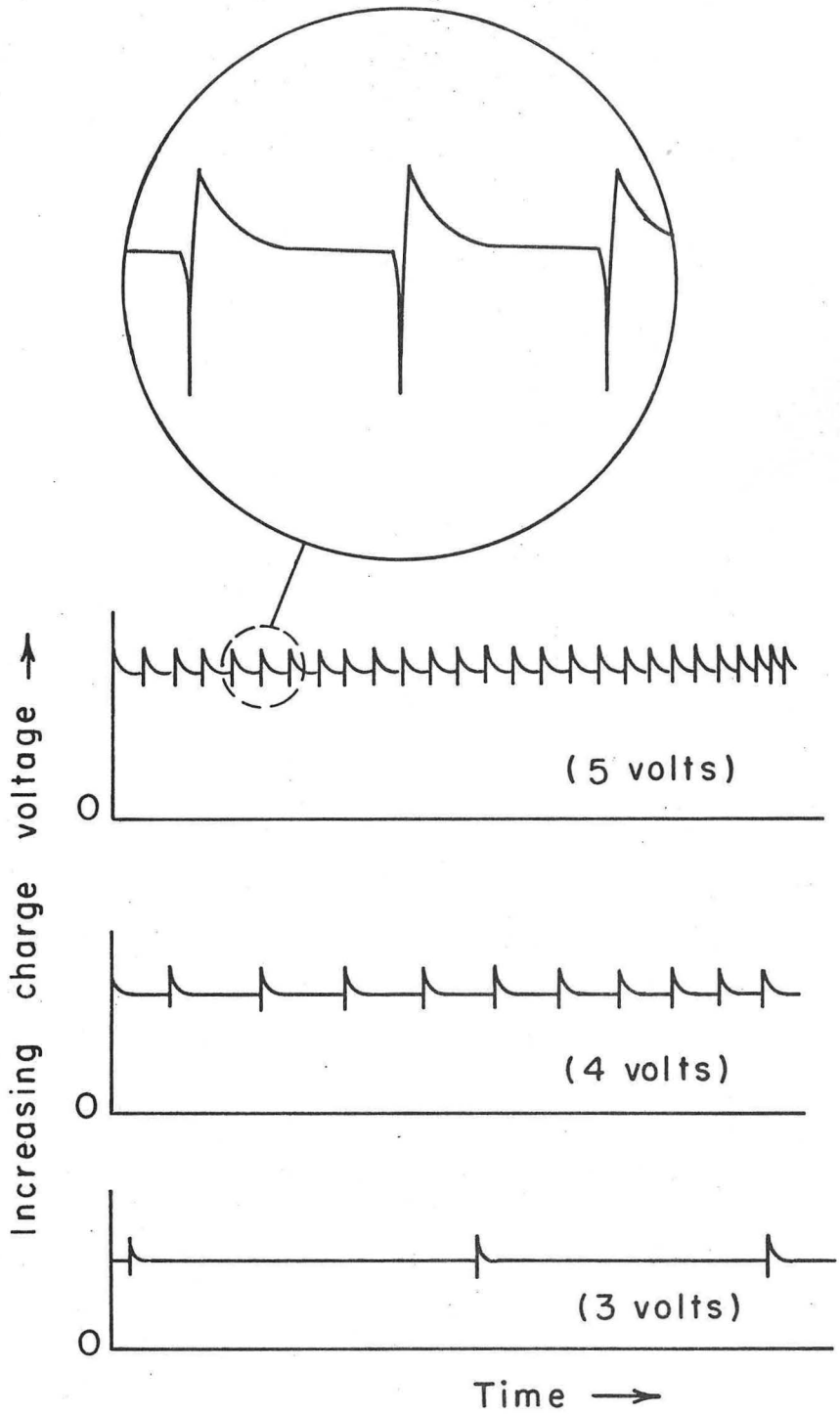

Fig. 4 XBL741-2261

LEGAL NOTICE

This report was prepared as an account of work sponsored by the United States Government. Neither the United States nor the United States Atomic Energy Commission, nor any of their employees, nor any of their contractors, subcontractors, or their employees, makes any warranty, express or implied, or assumes any legal liability or responsibility for the accuracy, completeness or usefulness of any information, apparatus, product or process disclosed, or represents that its use would not infringe privately owned rights.

TECHNICAL INFORMATION DIVISION
LAWRENCE BERKELEY LABORATORY
UNIVERSITY OF CALIFORNIA
BERKELEY, CALIFORNIA 94720