LBL-26844

Lawrence Berkeley Laboratory
UNIVERSITY OF CALIFORNIA

Accelerator & Fusion Research Division

Presented at the International Conference on Ion Sources, Berkeley, CA, July 10–14, 1989, and to be published in *Review of Scientific Instruments*

Some Novel Design Features of the LBL Metal Vapor Vacuum Arc Ion Sources

R.A. MacGill, I.G. Brown, and J.E. Galvin

June 1989

Prepared for the U.S. Department of Energy under Contract Number DE-AC03-76SF00098.

LOAN COPY
Circulates
for 2 weeks
Bldg. 50 Library.
LBL-26844
Copy 2

DISCLAIMER

This document was prepared as an account of work sponsored by the United States Government. While this document is believed to contain correct information, neither the United States Government nor any agency thereof, nor the Regents of the University of California, nor any of their employees, makes any warranty, express or implied, or assumes any legal responsibility for the accuracy, completeness, or usefulness of any information, apparatus, product, or process disclosed, or represents that its use would not infringe privately owned rights. Reference herein to any specific commercial product, process, or service by its trade name, trademark, manufacturer, or otherwise, does not necessarily constitute or imply its endorsement, recommendation, or favoring by the United States Government or any agency thereof, or the Regents of the University of California. The views and opinions of authors expressed herein do not necessarily state or reflect those of the United States Government or any agency thereof or the Regents of the University of California.

LBL-26844

Paper presented at the
International Conference on Ion Sources
Berkeley, CA, July 10-14, 1989

SOME NOVEL DESIGN FEATURES OF THE LBL METAL VAPOR VACUUM ARC ION SOURCES

Robert A. MacGill, Ian G. Brown and James E. Galvin

Lawrence Berkeley Laboratory
University of California
Berkeley, CA 94720

This work was supported by the U.S. Army Research Office under Contract No. ARO 116-89, the Office of Naval Research under Contract No. N00014-88-F-0093, and the Department of Energy under Contract No. DE-AC03-76SF00098.

SOME NOVEL DESIGN FEATURES OF THE LBL METAL VAPOR VACUUM ARC ION SOURCES

Robert A. MacGill, Ian G. Brown and James E. Galvin

Lawrence Berkeley Laboratory
University of California
Berkeley, CA 94720

ABSTRACT

The family of MEVVA (metal vapor vacuum arc) high current metal ion sources developed at LBL over the past several years has grown to include a number of different source versions with a wide range of some of the design and operational parameters. The MicroMEVVA source is a particularly compact version, about 2 cm diameter and 10 cm long, while the MEVVA IV weighs some 30 kG. MEVVAs IV and V incorporate multiple cathode assemblies (16 and 18 separate cathodes respectively), and the operating cathode can be switched rapidly and without down-time. The new MEVVA V embodiment is quite compact considering its broad beam (10 cm), high voltage (100 kV) and multiple cathode features. The large-area extractor grids used in the MEVVA V were fabricated using a particularly simple technique, and they are clamped into position and so can be changed simply and quickly. The electrical system used to drive the arc is particularly simple and incorporates several attractive features. In this paper we review and describe a number of the mechanical and electrical design features that have been developed for these sources.

I. INTRODUCTION

The MEVVA metal vapor vacuum arc high current metal ion sources that have been developed at the Lawrence Berkeley Laboratory were made initially for the purpose of providing intense uranium ion beams for injection into the Bevalac heavy ion synchrotron [1,2] for basic nuclear physics experiments. Since then it has become apparent that this kind of ion source is also of value for other applications including ion implantation for metallurgical surface modification. Consequently the source has been developed in a number of ways with these specific applications in mind.

In the overall LBL MEVVA r&d program, a total of five quite different sources have been designed and constructed, MEVVAs I through V, as well as two different versions of miniaturized sources, MicroMEVVA I and II. A photograph of three of these sources - the MEVVA II, MEVVA IV and MicroMEVVA II - is shown in Figure 1. These different sources all have their different characteristics and performance parameters, and in the process of their development a number of unique and interesting features have been used. Here we describe a number of these interesting characteristics.

II. DESCRIPTION OF THE SOURCES

MEVVA II

Following initial trials made on a relatively primitive first test version, the MEVVA II device was made and this has served as the "laboratory workhorse" for several years now. This is a single-cathode embodiment with a maximum extraction voltage of around 70 kV, an extractor diameter of up to 2 cm, which can readily produce a beam current of several hundred milliamperes in typical operation. Note that to-date all of the sources have been designed and operated in a pulsed mode, with a pulse length in the approximate range 0.1 to 5.0 ms and a repetition rate of up to a maximum of about 100 pps (depending on arc and beam currents and the pulse length). Pulsed operation is not an inherent limitation of this kind of ion source, but has evolved because of the low duty cycle pulsed nature of the synchrotron for which the sources were initially designed. The MEVVA II ion source has been described in several publications [3-6].

MEVVA IV

The principal novelty introduced in the MEVVA IV source is the multiple cathode feature. A multi-cathode assembly holds 16 separate cathodes, and by rotating the assembly externally any one of these cathodes can be brought into operation. At present the rotation (cathode switching) is performed manually, but clearly this could be automated with an electromechanical or air operated switching mechanism. The cathodes can be of the same or different metallic elements, thus increasing the effective lifetime of the source between scheduled maintenance periods (cathode replacement) by a factor of sixteen, or increasing the range of ion species that can be simply switched into operation in a single experimental run. A photograph displaying the multiple cathode assembly is shown in Figure 2.

The MEVVA IV can operate with a beam extraction voltage of up to 100 kV. The beam formation grids are similar to those used in the MEVVA II source, ie, of 2 cm diameter, and the beam current that can be produced is similar also. The performance of the MEVVA IV device is summarized in a companion paper [7].

MEVVA V

In the MEVVA V, we increased the size of the beam formation grids by a large factor, while maintaining the multiple cathode and high voltage features developed for the MEVVA IV. The extractor grids are 10 cm in diameter. For good usage of this large area it is necessary to present the metal plasma, from which the beam is to be formed, to the grids with a relatively uniform ion density profile across the extractor dimension; otherwise the beam optics will be poor, and breakdown between the grids will occur at relatively low voltage. Thus this source also incorporates a plasma expansion chamber in which the metal plasma plume generated at the cathode is allowed to expand to large size (comparable to the grid dimension) prior to beam formation and in which a samarium cobalt permanent magnet multipole structure can be included.

The grids were made using commercially available perforated metal sheet with hexagonal hole pattern. Although some drilling out and touching up of the beamlet extractor holes was necessary, by purchasing the pre-drilled sheet a great deal of layout and machine time was saved. This kind of perforated material is available in a wide range of hole size and for several different metals.

The multiple cathode feature was maintained, and in fact the number of individual cathodes was increased to 18. The cooling of the source was increased and made more efficient, and we expect that the power dissipation capability, which translates into pulse repetition rate and mean beam current, has also been increased. The cylindrical vacuum chamber is of alumina construction, and although its length is quite short, about 12 cm, an extraction voltage of nearly 100 kV in operation can be held. A photograph of the MEVVA V is shown in Figure 3. The MEVVA V source is still undergoing its commissioning process, and the performance results that we have obtained to-date are summarized in a companion paper to this paper [8].

MicroMEVVA

Two versions of miniature sources have been made. Both of these sources are of overall length about 10 cm, diameter about 2 cm, and mass about 100 gm. They are fabricated from coaxially fitting stock ceramic and stainless steel tubing, and are of particularly simple design. Beam extraction is done in an unsophisticated manner through a single aperture of diameter about 3 mm, and the maximum extraction voltage that can be maintained across the short distances is about 20 kV. Pulsed beam current is up to 10 or 20 mA. The entire source resides within the vacuum, and the cooling is minimal; thus the pulse repetition frequency (mean arc and beam current) is limited too. The MicroMEVVA sources have found useful application as high vacuum metal ion injectors into EBIS (electron beam ion source) devices [9]. The MicroMEVVA I (assembled) and the MicroMEVVA II (partially disassembled) are shown in Figures 4(a) and 4(b).

III. ELECTRICAL SYSTEM

Because of quite severe economic constraints we have been obliged to make simple and inexpensive ion source electronics and electrical support systems. The main parts of the overall system are the extractor power supply, the arc power supply, and the trigger generator. The extractor system makes use of an unfiltered high voltage power supply that charges a high voltage capacitor of 0.16 μF; the capacitor then serves as the power supply seen by the ion source. Thus the high voltage is applied across the extractor grids dc, and current is drawn only when the arc pulse is supplied to generate the metal plasma. The arc

is initiated by a trigger pulse applied between the ion source trigger electrode and the cathode, at a level of roughly 10 kV and of some microseconds duration. At present the trigger generator uses switched air spark gaps.

The arc current is supplied by an LC pulse line of impedance of order 1 Ohm (our present line has $Z_0 = 1.5$ Ohms) and pulse length several hundred microseconds (250 μs in our present version). The line output is connected across the ion source anode and cathode, and discharges into the vacuum arc when the trigger pulse is applied. We have incorporated several interesting features into the pulse line design that have greatly increased the ion source operation reliability.

(i). A 'modified Gibbs section' has been added to the front of the LC line to sharpen the risetime of the current pulse. This is simply a series RC combination with $R = Z_0$ and C the same as the other capacitors in the pulse line. The effect of this addition is to supply a small increment of current at early time - ie, to sharpen the pulse and help to establish the vacuum arc quickly.

(ii). A 'pre-arc' feature has been added, whereby a separate capacitor is discharged into the vacuum arc for the first few tens of microseconds, also helping to establish the arc at early times. This capacitor is charged to a higher voltage than the LC pulse line (we use a voltage doubler from the same power supply that charges the LC line), thus enabling the arc to establish even when the line charging voltage is low.

(iii). An 'efficiency enhancing' diode is included, whereby the charge that otherwise would be dumped into the line capacitors in the reverse direction after each discharge is caused to actually partially charge the line with the correct polarity. Thus the amount of charging current needed for the subsequent discharge is reduced and the pulse repetition frequency can be increased, for fixed mains power supply current. These features can be seen in the arc circuit shown schematically in Figure 5.

IV. CONCLUSIONS

Several different embodiments of MEVVA ion source have been developed as part of the LBL program, incorporating a number of unique and interesting features that enhance the source operation. Characteristics of importance include multiple cathodes and the ability to switch between cathode materials simply and quickly, high voltage operation, and broad beam source version as well as miniature versions. Also, several novel features have been incorporated into the electrical systems to increase the source operational reliability. The MEVVA r&d program is ongoing and it is to be expected that further improvements in the source mechanical and electrical design features will be made.

ACKNOWLEDGEMENTS

We are indebted to Bob Wright, Mark West and Mike Dickinson for their important contributions towards the fabrication of the MEVVA ion sources. This work was supported by the U.S. Army Research Office under Contract No. ARO 116-89, the Office of Naval Research under Contract No. N00014-88-F-0093, and the Department of Energy under Contract No. DE-AC03-76SF00098.

REFERENCES

1. J. R. Alonso, Nucl. Instrum. and Methods A244, 262 (1986).
2. B. Feinberg and I. G. Brown, 1987 Particle Accelerator Conference, Washington, D.C., March 1987. (Proceedings, IEEE Catalog No. 87CH2387- 9, p. 860).
3. I. G. Brown, in *The Physics and Technology of Ion Sources*, edited by I. G. Brown (Wiley, N.Y., 1989).
4. I. G. Brown, J. E. Galvin and R. A. MacGill, Appl. Phys. Lett. 47, 358 (1985).
5. I. G. Brown, J. E. Galvin, B. F. Gavin and R. A. MacGill, Rev. Sci. Instrum. 57, 1069 (1986).
6. I. G. Brown, IEEE Trans. Nucl. Sci. NS-32, 1723 (1985).
7. H. Shiraishi and I. G. Brown, *Operational Characteristics of a Metal Vapor Vacuum Arc Ion Source*, this Conference.
8. I. G. Brown, J. E. Galvin, R. A. MacGill and F. J. Paoloni, *A Broad-Beam, Multi-Ampere Metal Ion Source*, this Conference.
9. M. A. Levine, R. E. Marrs, J. R. Henderson, D. A. Knapp and M. B. Schneider, Physica Scripta T22, 157 (1988).

FIGURE CAPTIONS

Fig. 1 MEVVA II (left), MEVVA IV with corona shield removed (right), and the MicroMEVVA II (foreground).

Fig. 2 The MEVVA IV multiple cathode assembly, partially disassembled.

Fig. 3 The MEVVA V ion source.

Fig. 4 (a) MicroMEVVA I (assembled), and (b) MicroMEVVA II (partially disassembled).

Fig. 5 Schematic of typical MEVVA arc power supply.

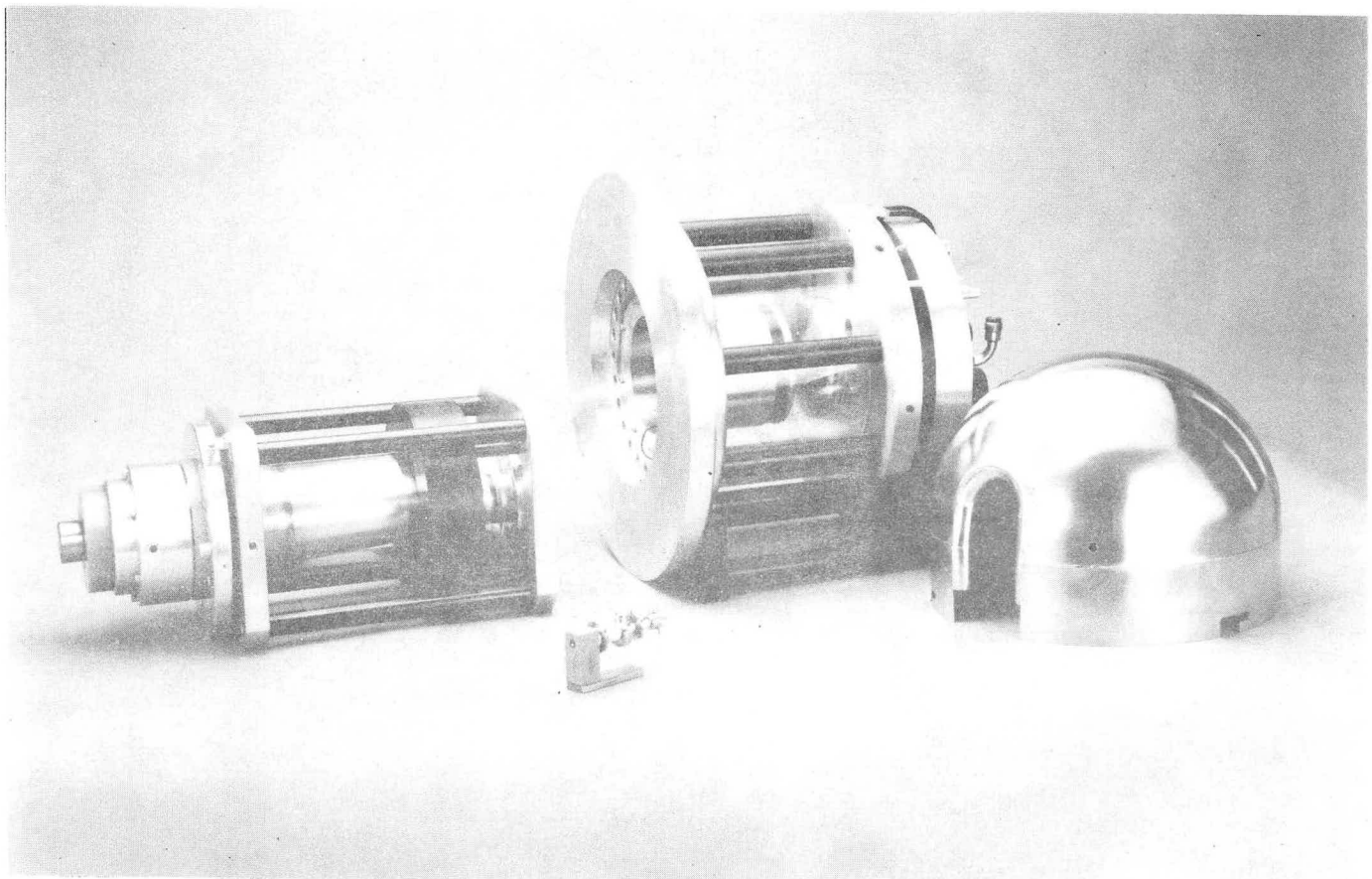

CBB 881-677

Figure 1

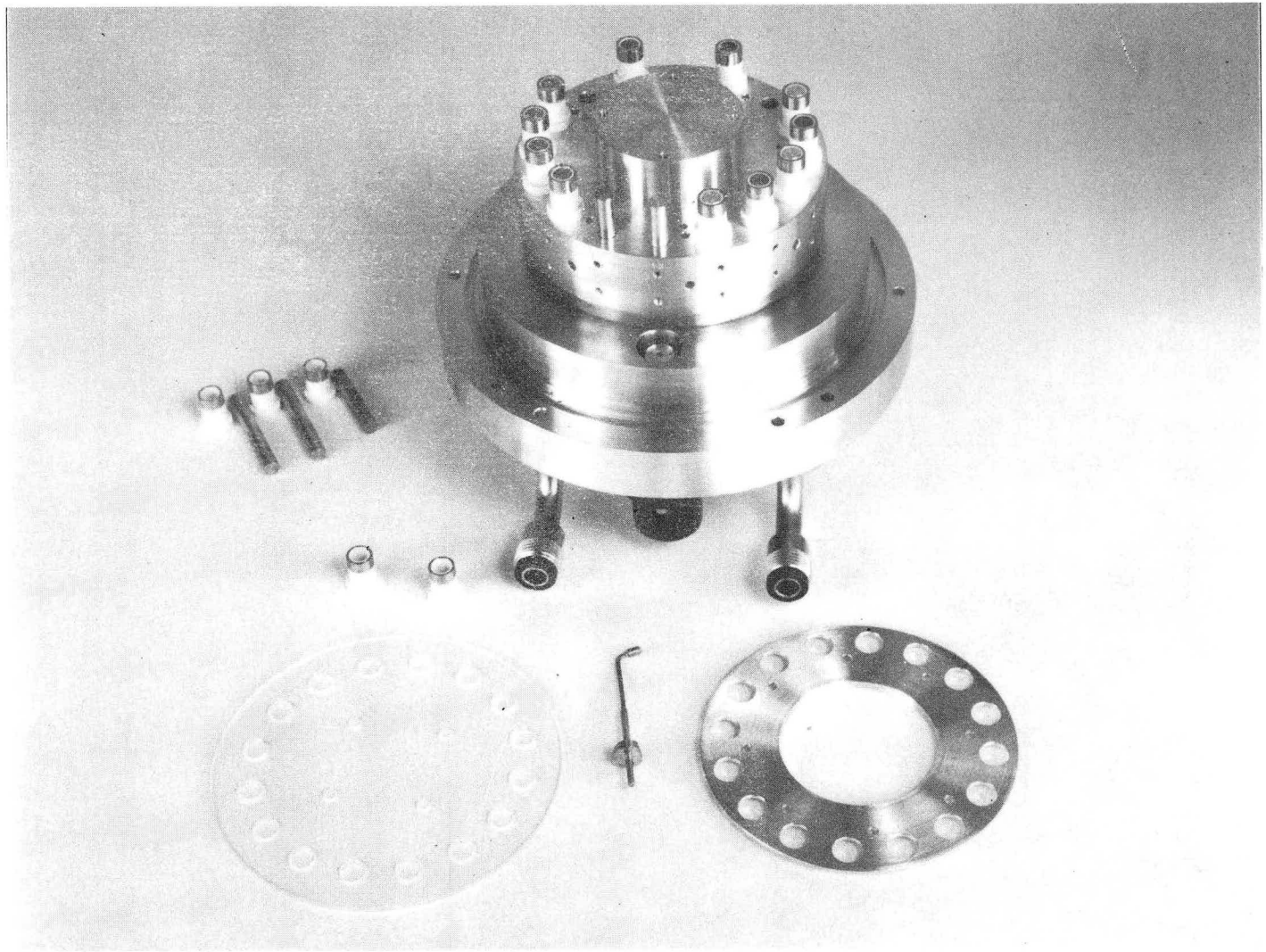

CBB 860-9287

Figure 2

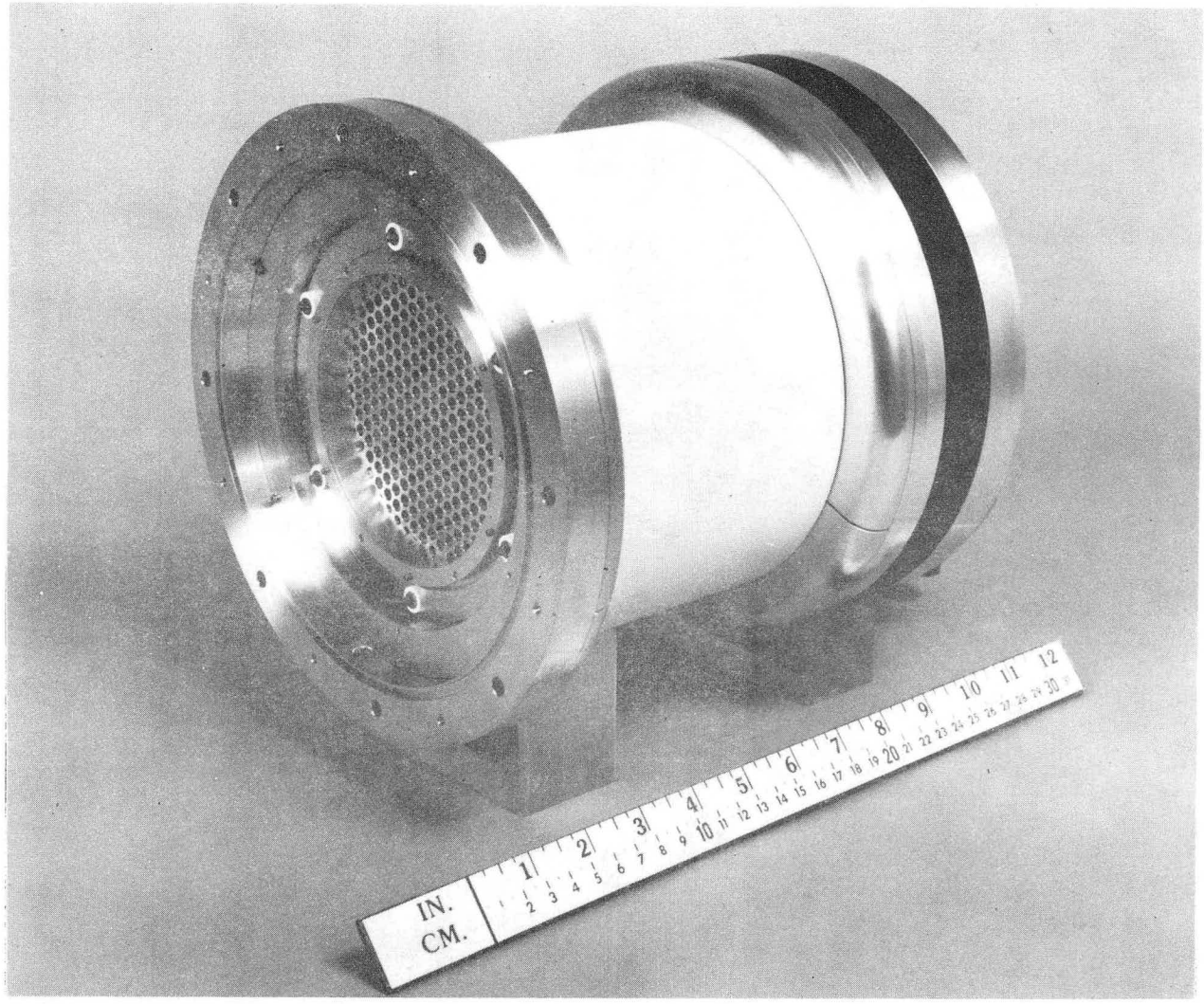

CBB 892-1120

Figure 3

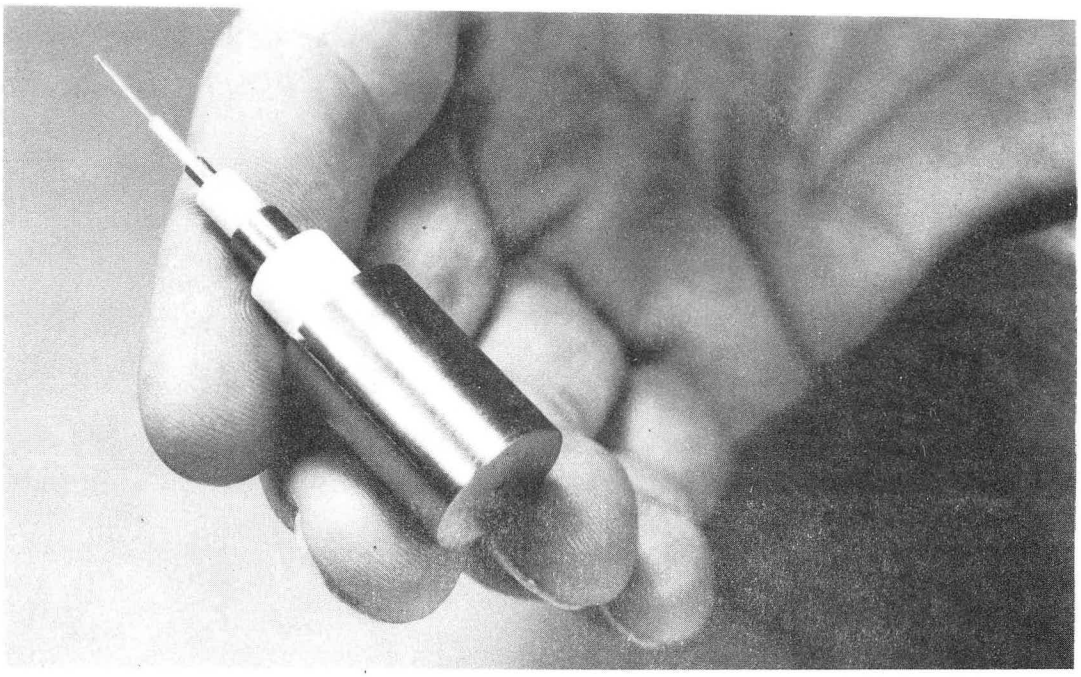

CBB 864-3054

Figure 4a

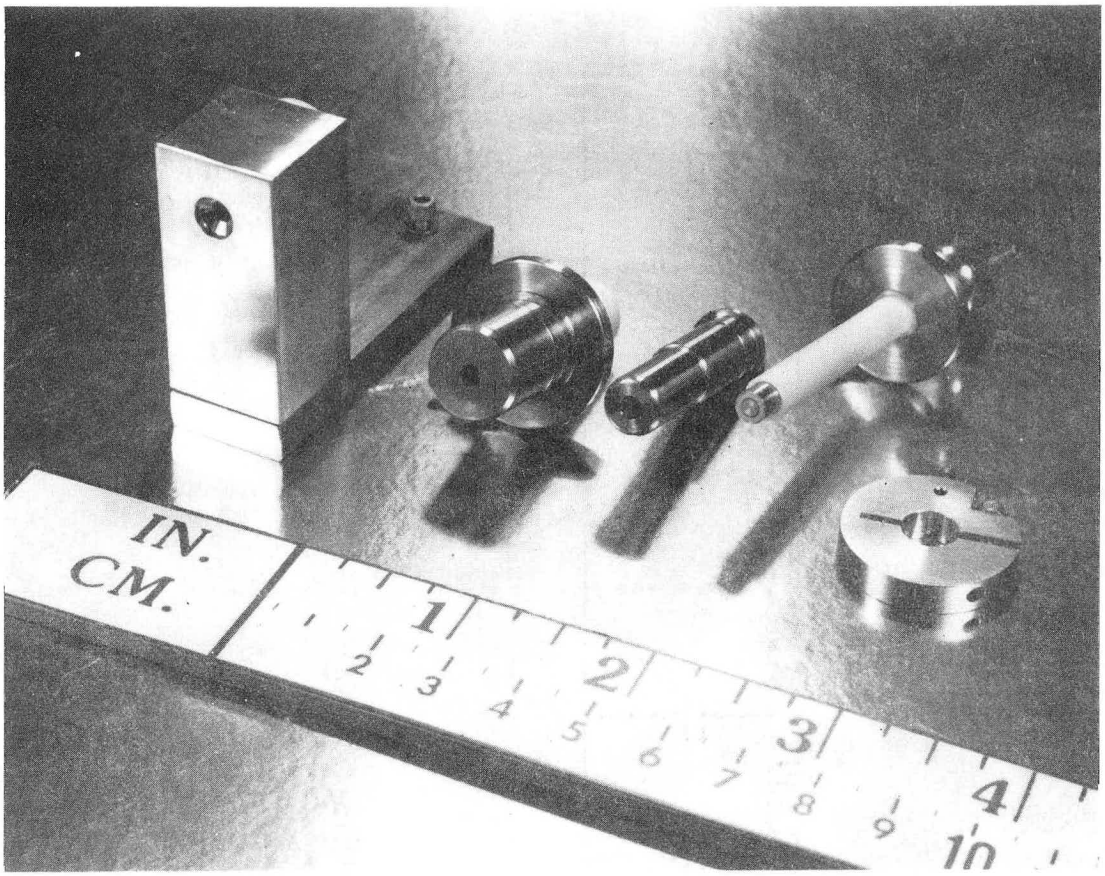

CBB 879-7331

Figure 4b

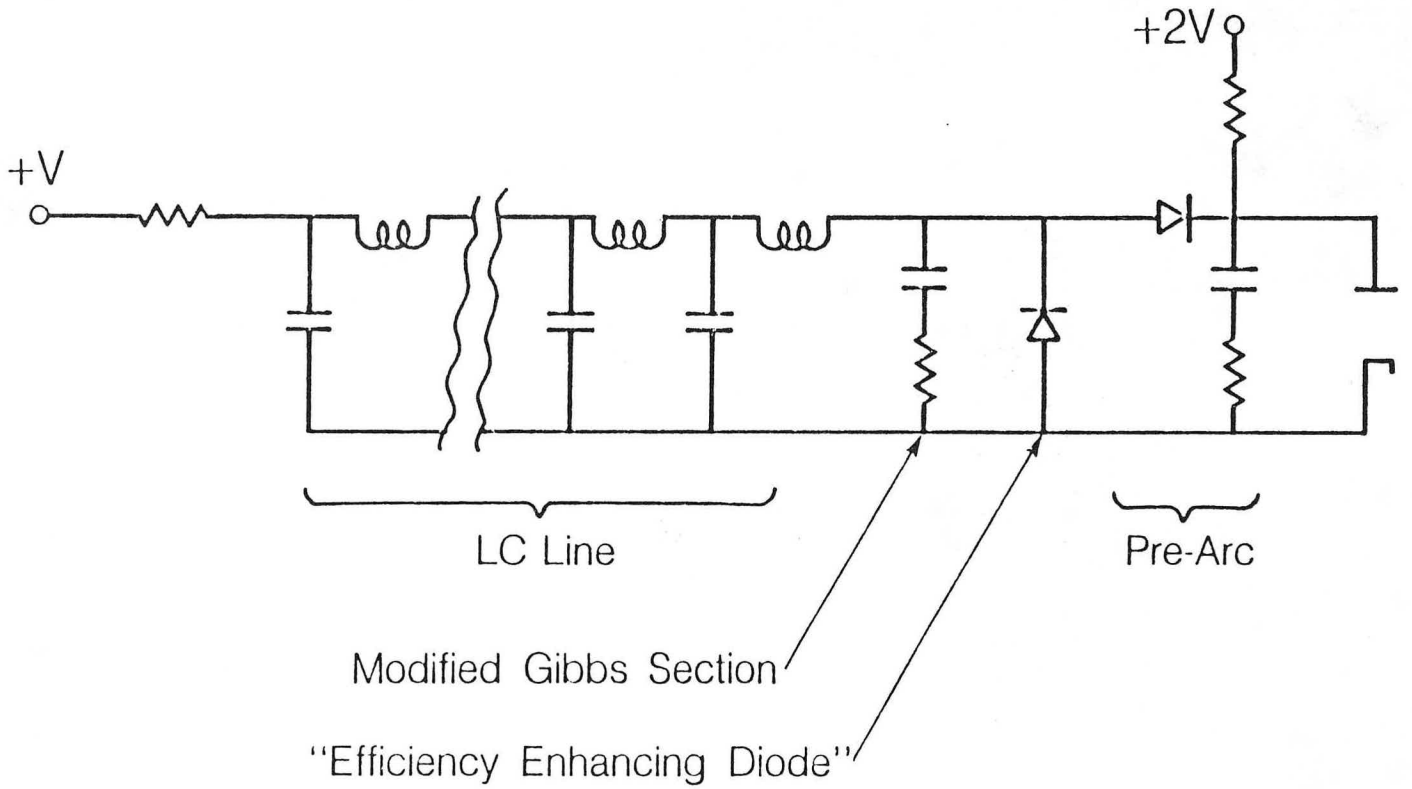

XBL 896-6932

Figure 5

LAWRENCE BERKELEY LABORATORY
TECHNICAL INFORMATION DEPARTMENT
1 CYCLOTRON ROAD
BERKELEY, CALIFORNIA 94720