LBL-27059 c.2

Lawrence Berkeley Laboratory
UNIVERSITY OF CALIFORNIA

Accelerator & Fusion Research Division

RECEIVED
LAWRENCE
BERKELEY LABORATORY

JUL 31 1989

LIBRARY AND
DOCUMENTS SECTION

To be published in the Proceedings of the
1989 Workshop on Advanced Accelerator Concepts,
Lake Arrowhead, CA, January 9–13, 1989

Elements of a Realistic 17 GHz FEL/TBA Design

D.B. Hopkins, K. Halbach, E.H. Hoyer,
A.M. Sessler, and E.J. Sternbach

January 1989

TWO-WEEK LOAN COPY

This is a Library Circulating Copy which may be borrowed for two weeks.

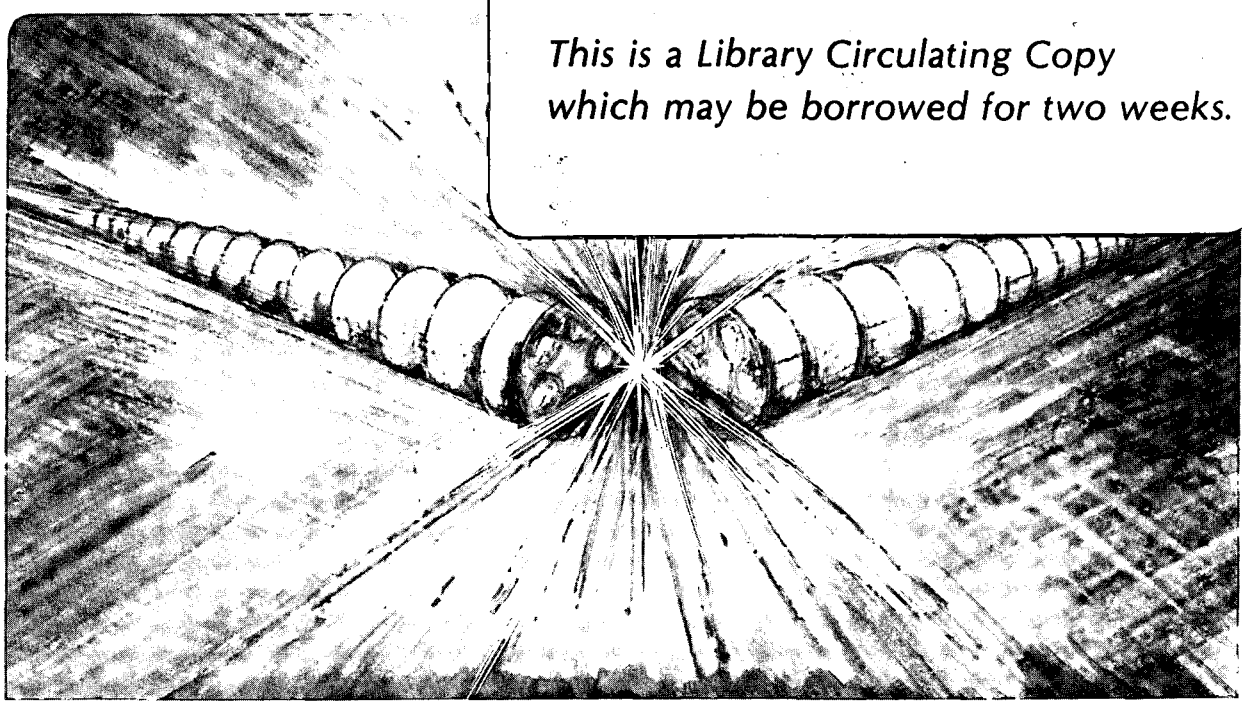

LBL-27059 c.2

Prepared for the U.S. Department of Energy under Contract Number DE-AC03-76SF00098.

DISCLAIMER

This document was prepared as an account of work sponsored by the United States Government. While this document is believed to contain correct information, neither the United States Government nor any agency thereof, nor the Regents of the University of California, nor any of their employees, makes any warranty, express or implied, or assumes any legal responsibility for the accuracy, completeness, or usefulness of any information, apparatus, product, or process disclosed, or represents that its use would not infringe privately owned rights. Reference herein to any specific commercial product, process, or service by its trade name, trademark, manufacturer, or otherwise, does not necessarily constitute or imply its endorsement, recommendation, or favoring by the United States Government or any agency thereof, or the Regents of the University of California. The views and opinions of authors expressed herein do not necessarily state or reflect those of the United States Government or any agency thereof or the Regents of the University of California.

LBL-27059

ELEMENTS OF A REALISTIC 17 GHz FEL/TBA DESIGN*

D. B. Hopkins, K. Halbach, E. H. Hoyer, A. M. Sessler, E. J. Sternbach
Accelerator & Fusion Research Division
Lawrence Berkeley Laboratory
University of California
1 Cyclotron Road
Berkeley, California 94720

January, 1989

* Work performed under the auspices of the U.S. Department of Energy by the Lawrence Berkeley Laboratory under contract number DE-AC03-76SF00098.

ELEMENTS OF A REALISTIC 17 GHz FEL/TBA DESIGN*

D. B. Hopkins, K. Halbach, E. H. Hoyer, A. M. Sessler, E. J. Sternbach
Accelerator & Fusion Research Division
Lawrence Berkeley Laboratory
University of California
1 Cyclotron Road
Berkeley, California 94720

ABSTRACT

Recently, renewed interest in an FEL version of a two-beam accelerator (TBA) has prompted a study of practical system and structure designs for achieving the specified physics goals. This paper presents elements of a realistic design for an FEL/TBA suitable for a 1 TeV, 17 GHz linear collider.

1 - TeV LINEAR COLLIDER SPECIFICASTIONS.

In this paper, we discuss a realistic design for a 1 TeV (center of mass) linear positron-electron collider based on the FEL/TBA approach. We choose a set of machine specifications established by R. B. Palmer during the course of accelerator optimization studies.[1] Excerpts from Palmer's list are given in Table 1. The collider considered here thus consists of two opposed 500 GeV accelerators operating at a frequency of 17.143 GHz.

Table 1. 1 TeV Linear Collider Specifications

<u>Collider</u>

Operating frequency	17.143 GHz
Total length	7.29 km
Particles/bunch	2×10^{10}
No. bunches	10
Luminosity	7.9×10^{33} cm^{-2} sec^{-1}
Repetition rate	360 pps
Wall plug power	210 MW

* Work performed under the auspices of the U.S. Department of Energy by the Lawrence Berkeley Laboratory under contract number DE-AC03-76SF00098.

Table 1. [continued]

<u>Accelerator Structure</u>

Accelerating gradient	186 MeV/m
Peak cavity field	463 MV/m
rf power/m required	586 MW/m
Stored energy/m	35.1 J/m
Length between feeds	1.60 m
rf power/feed required	938 MW
rf pulse length	60 ns
Group velocity/c	0.082
Attenuation parameter, τ	0.60
Cavity diameter	14.90 mm
Iris diameter	7.00 mm
Q	5850

The required rf power is to be generated by FEL sections as depicted in Figure 1. Periodically, induction accelerator modules will reaccelerate the bunched beam restoring the energy given up to the FEL microwave field. The detailed physics analysis of this type of power source is presented elsewhere.[2,3]

For the FEL sections, we choose the parameters shown in Table 2 which we believe to be realistic (i.e. readily achievable.)

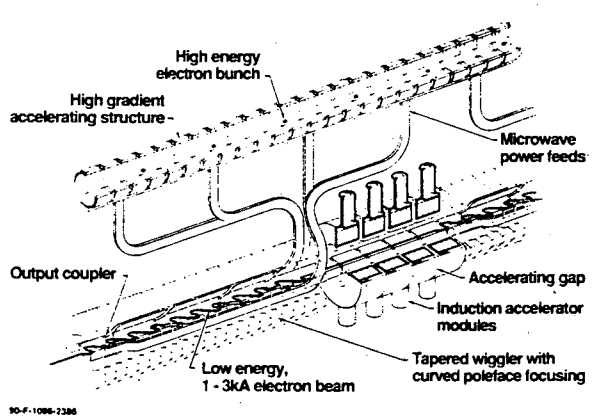

Fig. 1. FEL/TBA Configuration.

Table 2. FEL Section Parameters

Beam energy	14.0 MeV
Beam current	3.0 kA
Beam brightness	10^8 A/(m-rad)^2
Wiggler length	3.8 m
Initial wiggler field	3.8 kG
Number of gain periods	12
Wiggler period	25 cm
Beam energy loss/FEL	1.4 MeV
Number HGA feeds supplied	4
Total power output	4.2 GW
Average power output/m	1.1 GW/m
Feedline power loss allowance	12%

REALISTIC SYSTEM DESIGN

In this paper, we assume that the 14 MeV, 3kA bunched beam is available from an injection section in which are taken the unavoidable losses from such mechanisms as beam scraping and the imperfect trapping of particles in rf buckets. Analysis, still in progress, shows that beyond this front-end system, the number of particles trapped in rf buckets is likely to remain high and relatively stable for at least several, and perhaps dozens, of repetitive FEL/reacceleration cycles. A generalized diagram of a "downstream" repetitive FEL sub-unit, or superperiod, is shown in Figure 2. With a 1.6 m length between high gradient accelerator (HGA)

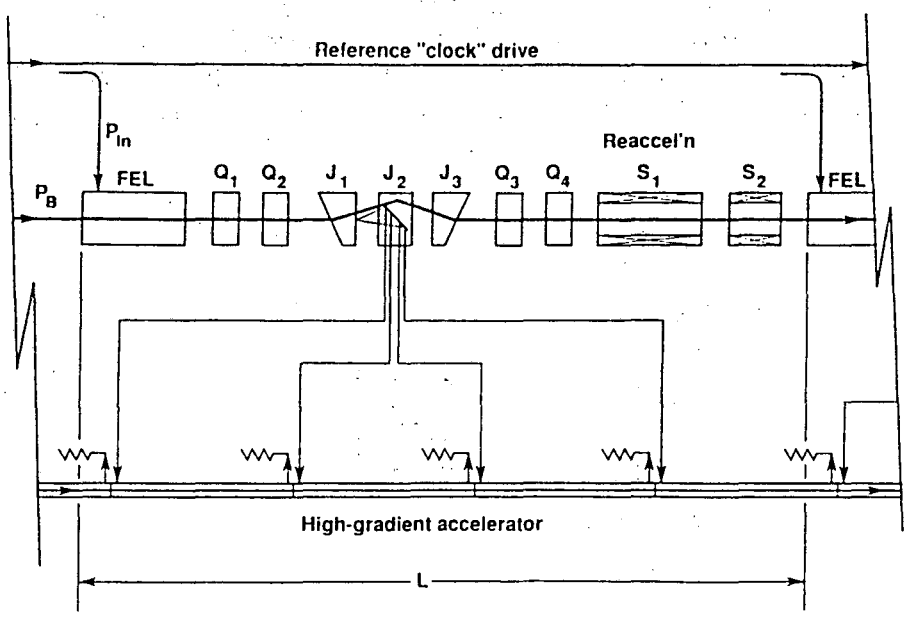

90-F-0389-0102

Fig. 2. FEL/TBA Superperiod.

feed points (from Table 1) the corresponding superperiod length, L, is thus 6.4 m. The HGA under consideration is a traveling-wave disc-loaded waveguide having the specifications listed in Table 1.

Recent analysis shows that the strongly bunched beam entering each FEL section establishes the necessary phase so that no phase-locking input (i.e. P_{in}) is required. The system phase stability is analyzed in Reference 2. For this present paper, we assume that phase control will not impose any other constraints on the proposed configuration.

As seen in Table 1, the required wiggler parameters are modest. We therefore envision the use of fixed, permanent-magnet wigglers having the required optimized tapering of the wiggler magnetic field along their length. Figure 3 shows such a wiggler[4] designed for an earlier study[5] employing a 3.5 MeV, 3 ka beam, a 12-cm wiggler period and a 4.1 kG initial wiggler field. The design is simple, straightforward and inexpensive (i.e. < $50k/m). With a 14 MeV beam, a 25 cm wiggler period and a 3.8 kG initial field value, the present requirement is, in several respects, even more modest. The interaction waveguide (IW) size is to be 3x10 cm, rectangular, however. Also, curved pole faces, rather than the flat faces shown in Figure 3, are planned to provide proper beam focussing in both the x and y planes.

After the FEL, the second major component of each superperiod is the high-power microwave extractor. This power must be efficiently separated from the electron beam, divided equally into four paths, and transported with proper phase to the four HGA feed points. We are presently studying two possible methods for achieving these functions. Figure 4 shows microwave extractor concept no. 1. The electron beam is achromatically jogged away from the centerline by ~ 15 cm. The widened

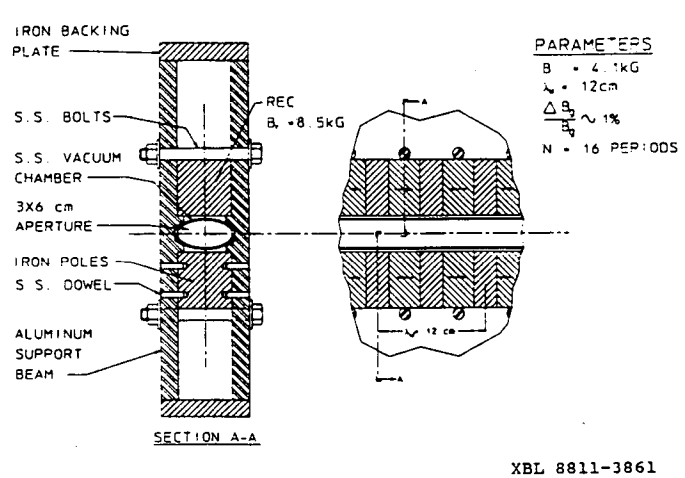

Fig. 3. Permanent magnet wiggler for a 3.5 MeV, 3.0 kA FEL.

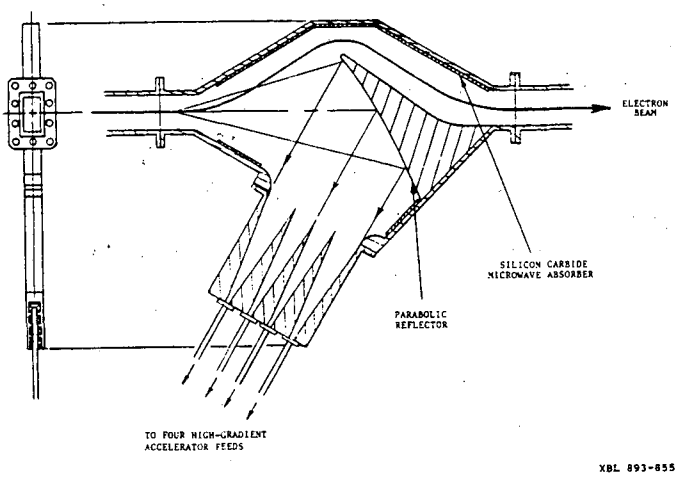

Fig. 4. Microwave extractor concept no. 1.

chamber permits the microwave beam to spread (with a ~ 8° half-angle) and be reflected by a parabolic surface. Such a scheme produces a broad, parallel microwave beam with a planar uniphase front. The chamber's y-dimension (out of the paper) is a constant 3 cm throughout; i.e. the chamber is broadened in the x-direction only. Because four HGA feeds must be supplied, a 1:4 power division can conveniently be achieved in the chamber. Three short septa divide the power into four oversized waveguides which immediately taper down to the standard dominant-mode waveguide size (i.e. WR-62). We are presently negotiating a contract with TRW who will provide analytical support for studying microwave propagation problems and who will aid in producing an optimized design with minimum mode-conversion, and other, losses.

A possible unacceptable drawback to the concept just discused is the effect on the electron beam of the assymmetries in the beam return-current path in the extractor chamber. Figure 5 shows the elements of the extractor drawn to scale and perhaps indicates that the treatment of the beam is not quite as drastic as Figure 4 would suggest. Also, the top and bottom walls (in the y-direction) are always substantially closer to the beam than the sidewalls. The beam return-current is therefore primarily carried in the top and bottom walls and is less affected by the sidewall position. It appears likely that this geometry can be modeled and studied by computer codes in use at LLNL. A simple "kick" of the beam, caused by this scheme, can be compensated by an external dipole magnet. Any appreciable emittance degradation, on the other hand, may be intolerable for the long machines contemplated.

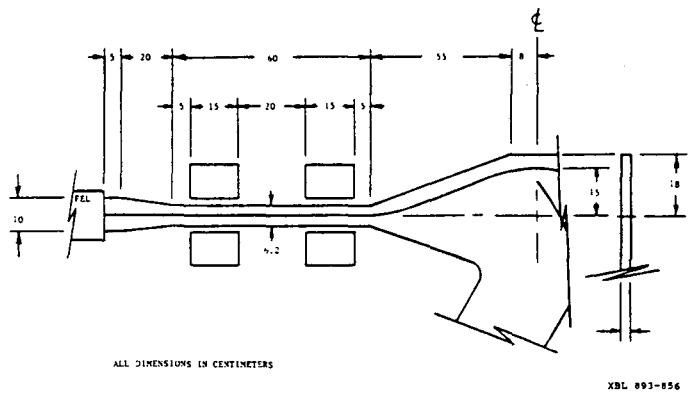

Fig. 5. Scale drawing of microwave extractor concept no. 1.

We now examine the likelihood of electrical breakdown and multipactor problems in the IW and output waveguides. For the TE_{01} mode in a rectangular waveguide, the peak power is given by

$$\hat{P} = \frac{a \times b}{4\eta}\left(\frac{\lambda}{\lambda_g}\right)\hat{E}^2$$

where $\hat{P}$ is the peak power, a and b are the waveguide dimensions (a is parallel to the E-vector), η is the intrinsic vacuum impedance, λ is the operating wavelength, λ_g is the guide wavelength, and $\hat{E}$ is the peak electric field.

λ/λ_g is given by

$$\frac{\lambda}{\lambda_g} = \left[1 - \left(\frac{\lambda}{\lambda_c}\right)^2\right]^{1/2} = \left[1 - \left(\frac{c}{2bf}\right)^2\right]^{1/2}$$

where λ_c is the cutoff wavelength, c is the velocity of light, and f is the operating frequency. The vacuum microwave breakdown electric field, E_{bd}, can be scaled[6] from the SLAC-measured value of 312 MV/m at 2.856 GHz for 2.5 μs pulses[7]:

$$E_{bd} = 0.312\left(\frac{f_{GHz}}{2.856}\right)^{1/2}\left(\frac{T_{\mu s}}{2.5}\right)^{-1/4} \qquad [GV/m]$$

where T is the pulse width. For 17.1 GHz, 60 ns pulses we obtain $E_{bd} \approx 2.0$ GV/m. If we conservatively derate this value to 300 MV/m, we calculate for the maximum allowable power levels in the IW and output waveguides (the latter having dimensions of 1.58x0.79 cm) the values of 175 GW and 7.3 GW, respectively. We thus conclude that breakdown in the waveguides should not be a problem. Attention to precision flange mating, however, is likely to be important.

Double-sided multipactor is known to be possible in magnetic field-free regions if the following condition is satisfied[8]:

$$0.07 < fd < 10 \qquad \text{[GHz-cm]}$$

where fd is the product of the operating frequency and the distance between any two walls at different rf potentials. Any magnetic field present can only lower the numerical values in the above inequality. The IW and output waveguides have fd products of 170 GHz-cm and 13.6 GHz-cm respectively, so should not exhibit double-sided multipactor. Single-sided or unipolar, multipactor is also unlikely with such high fd values and is, in any case, amenable to magnetic field suppression techniques.[9]

For the beam-jog magnets required in the above concept, a 4 kG adjustable permanent magnet dipole (designed by K. Halbach) is shown in Figure 6. Edge-focussing is included in the design. Figure 7 presents an analysis[10] of the x- and y- excursions of the beam outer envelope with a sample design, using quadrupole magnets, of the microwave extractor concept no. 1 and the beamline between the FEL and the reacceleration modules. As can be seen, the design accepts a 1-cm diameter beam at the FEL output and delivers the same-sized beam to the reacceleration module. For other extractor concepts, it may be desirable to use solenoids for beam transport and focussing, rather than quadrupoles.

Regarding space allocation within the 6.4 m-long superperiod, the FEL length is 3.8 m and the length required for reacceleration is about 1.4 m. Only 1.2 m remains for the microwave extractor and any required additional focussing or matching elements. The extractor concept no. 1, with its associated quadrupole magnet layout, is thus too long as shown. We have not yet examined the possibility of a shorter design but have instead, studied another extractor concept, which we now discuss.

A second concept for microwave extraction is shown in Figure 8. The solid arrows show the microwave electric field vectors at a given instant in time. The dotted arrows indicate the direction of microwave propagation. This scheme[11] has the advantage of symmetry in beam return-current paths. Following the FEL, the beam pipe is symmetrically tapered up to a 25-30 cm diameter where a four-faceted reflector (e.g. graphite) is located. This quasi-optical element thus serves as the desired

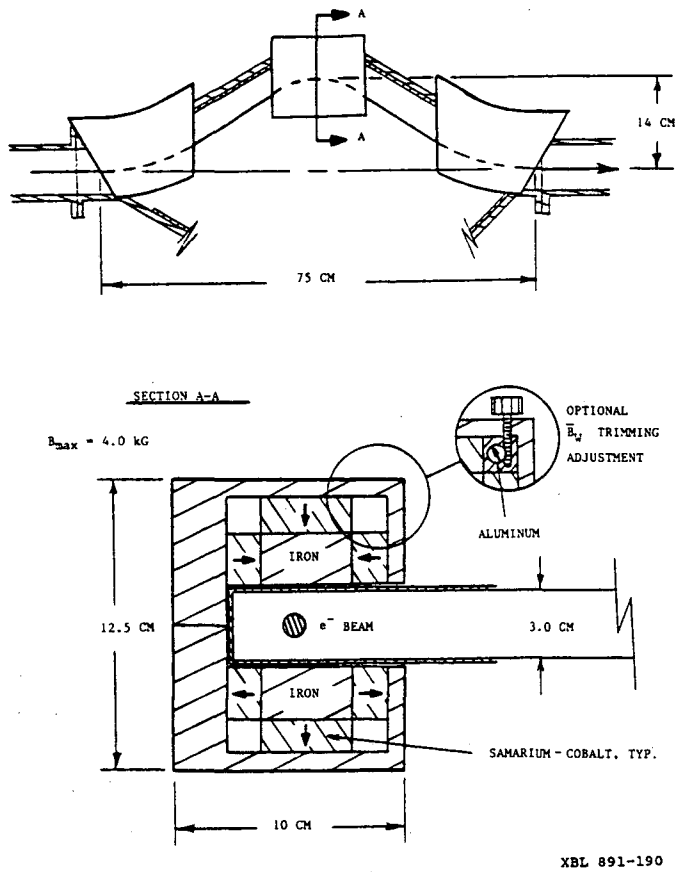

Fig. 6. Achromatic beam-jog magnets.

four-way power divider and directs the microwaves into four oversized waveguides through a highly transparent wire grid of beam current-return bars at each port. The electron beam and, unavoidably, several percent of the microwave power continue through the ~ 3 cm-diameter hole in the reflector. Due to diffraction, this microwave beam expands and is primarily absorbed on downstream wall liners. This second extractor concept has the obvious advantage of symmetry. Also, it appears that it can be implemented in the space available.

Not much will be said here about the induction reacceleration modules and their power sources. These are of more or less standard design and have been discussed in detail and cost-estimated elsewhere.[5] Tests are presently being conducted on recently-designed smaller diameter cells at LLNL which show promise for reducing costs. As indicated in Figure 2, these modules have solenoidal focussing magnets built into their structure.

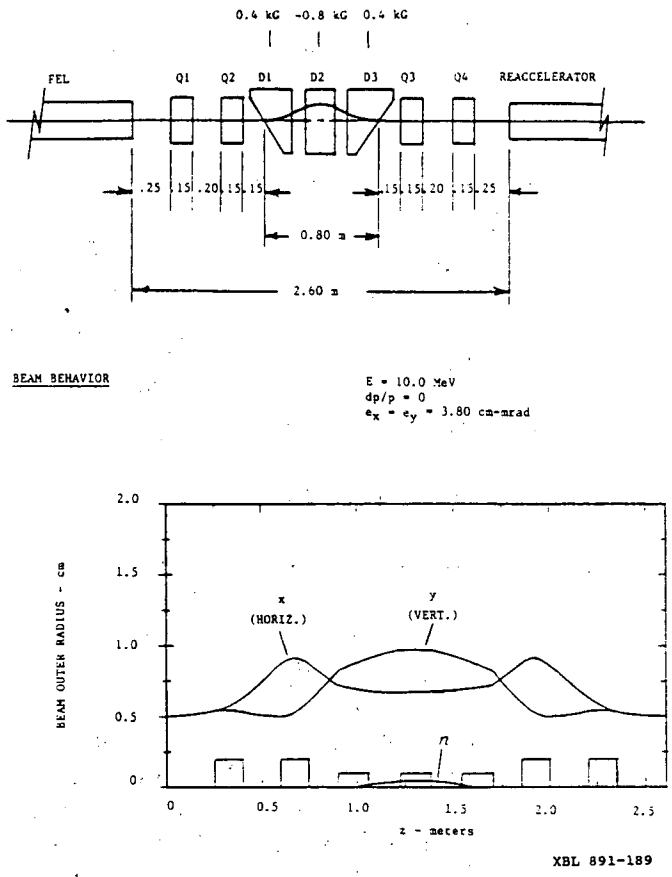

Fig. 7. Electron beam-envelope behavior in microwave extractor concept no. 1.

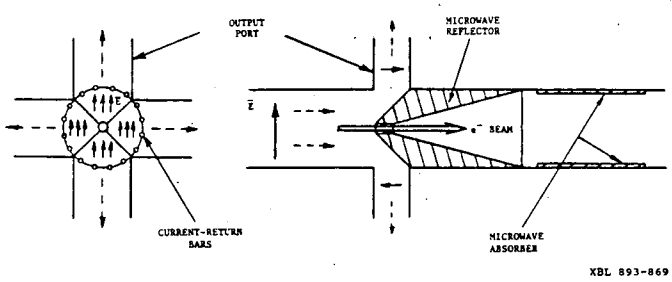

Fig. 8. Microwave extractor concept no. 2.

Actual experimental studies of bunched-beam reacceleration have not yet taken place but are scheduled to begin within the year.[12] Two examples of important questions to be resolved are, (1) the effect of reacceleration on beam emittance, and (2) the degree of beam energy loss due to bunch-excited rf cavity losses in the reacceleration cells.

Finally, we note the need for a well designed beam transport system to obtain an efficient, repetitive traversal of the superperiods just discussed and the proper matching of the beam into each FEL section, with minimal degradation of beam current and emittance. Element S_2 of Figure 2 indicates a solenoid, or any additional magnetic elements, required for achieving proper beam transport. Partly because of the as-yet unresolved choice of microwave extractor concept, a detailed, optimized beam transport study has not yet been carried out. Such a design study may show that S_2 is unnecessary, thereby maximizing the space available for the microwave extractor and reacceleration modules.

CONCLUSIONS

High quality, GW power-level microwaves at 35 GHz were first generated in an FEL several years ago at the LLNL ELF facility. There, in 1989, in the upgraded ETAII/ELF II facility, a few GW of peak power at 140 GHz is scheduled to be produced for plasma heating.[13] Later, with a [1]different wiggler, 10 GW of peak power and 2 MW of average power at 250 GHz will be produced in 0.5 sec bursts. Therefore, there is little doubt that 17 GHz power adequate for a TeV linear collider can be generated in FEL sections. The central questions remaining to be answered revolve around beam dynamics and such practical aspects as efficient microwave extraction and successful bunched-beam reacceleration. We believe it is time to move ahead, experimentally, and obtain these answers. Reacceleration studies will commence soon. Analytical studies of microwave extractor concepts are in progress. Experimental tests of a preferred concept should begin within the year.

We hope to obtain funding for initiating 17 GHz FEL experiments, perhaps with a permanent-magnet wiggler, in the FY-90 or 91 time frame. During these experiments, we will study phase stability and investigate methods for controlling variations in beam current and energy. In any case, no "show stoppers" are forseen. Although analytical studies in progress will steer the system physics design, it is not too early to begin experimental testing of the key sub-systems discussed above.

REFERENCES

1. R. B. Palmer, "Some Recently Calculated Parameter Sets #1", AAS-Note 39, Stanford Linear Accelerator Center, November (1988).

2. J. S. Wurtele, et al., "A Study of Phase Control in the TBA", these proceedings.

3. J. S. Wurtele and A. M. Sessler, "High Repetition Rate Linear Colliders at TeV and GeV Energies", Proc. Symp. on Advanced Accelerator Concepts, Madison, Wis. August (1986).

4. Designed by K. Halbach and E. H. Hoyer.

5. D. B. Hopkins, et al., "An FEL Power Source for a TeV Linear Collider", Presented at the 1988 Linear Accelerator Conf., Williamsburg, Va., October 2-7 (1988).

6. G. A. Loew of SLAC points out that the dependence of E_{bd} on pulse width is not well known, but that indications are that n = - 1/4 to - 1/3 in T^n scaling.

7. J. W. Wang and G. A. Loew, "Measurements of Ultimate Accelerating Gradients in the SLAC Disk-Loaded Structure, IEEE Trans. Nuc. Sci. NS-32 (1985), p. 2915.

8. A. J. Hatch, "Suppression of Multipacting in Particle Accelerators", Nucl. Inst. and Meth., 41 (1966), pp. 261-271.

9. K. Sakamoto et al., "Unipole Multipactoring Discharge in the LHRF Launcher", IEEE. Trans. Plas. Sci. PS-14, 4, August (1986).

10. Analysis by A. C. Paul, LLNL.

11. Suggested by T. J. Orzechowski, LLNL.

12. Tests to be conducted by North Star Research Corp., Albuquerque, N.M., and Pulse Sciences Inc., Agoura Hills, Ca., under a second-phase Small Business Innovative Research (SBIR) grant.

13. A. L. Throop, el al., "High-Average-Power Millimeter-Wave FEL for Plasma Heating Using the ETA-II Accelerator", Presented at the 1989 Particle Accelerator Conference, Chicago, Ill., March 21-24 (1989).

LAWRENCE BERKELEY LABORATORY
TECHNICAL INFORMATION DEPARTMENT
1 CYCLOTRON ROAD
BERKELEY, CALIFORNIA 94720