UC-411
LBL-27288 c.1

Lawrence Berkeley Laboratory

UNIVERSITY OF CALIFORNIA

RECEIVED
LAWRENCE BERKELEY LABORATORY
SEP 27 1989
LIBRARY AND
DOCUMENTS SECTION

Physics Division

Presented at the Trends in Theoretical Physics Colloquia Series, Minneapolis, MN, March 29, 1989, and to be published in the Proceedings

The Standard Model and Beyond

M.K. Gaillard

May 1989

For Reference

Not to be taken from this room

LBL-27288 c.1

Prepared for the U.S. Department of Energy under Contract Number DE-AC03-76SF00098.

DISCLAIMER

This document was prepared as an account of work sponsored by the United States Government. While this document is believed to contain correct information, neither the United States Government nor any agency thereof, nor the Regents of the University of California, nor any of their employees, makes any warranty, express or implied, or assumes any legal responsibility for the accuracy, completeness, or usefulness of any information, apparatus, product, or process disclosed, or represents that its use would not infringe privately owned rights. Reference herein to any specific commercial product, process, or service by its trade name, trademark, manufacturer, or otherwise, does not necessarily constitute or imply its endorsement, recommendation, or favoring by the United States Government or any agency thereof, or the Regents of the University of California. The views and opinions of authors expressed herein do not necessarily state or reflect those of the United States Government or any agency thereof or the Regents of the University of California.

May 31, 1989

LBL-27288
UCB-PTH-89/13

THE STANDARD MODEL AND BEYOND *

To be included as a chapter in
Trends in Theoretical Physics, Vol. 1
P.J. Ellis and Y.C. Tang, Editors

Mary K. Gaillard

Department of Physics
University of California
and
Theoretical Physics Group
Physics Division
Lawrence Berkeley Laboratory
1 Cyclotron Road
Berkeley, California 94720

*This work was supported in part by the Director, Office of Energy Research, Office of High Energy and Nuclear Physics, Division of High Energy Physics of the U.S. Department of Energy under Contract DE-AC03-76SF00098 and in part by the National Science Foundation under grant PHY85-15857.

THE STANDARD MODEL AND BEYOND

Mary K. Gaillard
Department of Physics and Center for Particle Astrophysics
University of California at Berkeley
and
Theoretical Physics Group, Physics Division
Lawrence Berkeley Laboratory

The field of elementary particle, or high energy, physics seeks to identify the most elementary constituents of nature and to study the forces that govern their interactions. Increasing the energy of a probe in a laboratory experiment increases its power as an effective microscope for discerning increasingly smaller structures of matter. Thus we have learned that matter is composed of molecules that are in turn composed of atoms, that the atom consists of a nucleus surrounded by a cloud of electrons, and that the atomic nucleus is a collection of protons and neutrons.

The more powerful probes provided by high energy particle accelerators have taught us that a nucleon (proton or neutron) is itself made of objects called quarks. Different quarks (q) are distinguished by attributes known as "flavor" and "color". The flavor quantum numbers of nucleons, such as electric charge, are determined by the flavor quantum numbers of the three "valence quarks" that are their constituents. The proton p (with electric charge $Q_p = +1$ in units of the positron charge) is composed of two "up" quarks u ($Q_u = +\frac{2}{3}$) and one "down" quark d ($Q_d = -\frac{1}{3}$); the neutron n (electric charge $Q_n = 0$) is composed of two down quarks and one up quark, as illustrated schematically in Figure 1. In both cases the three valence quarks are each of a different color, i.e. the the nucleons are "white", or color neutral, as are all known bound states of quarks.

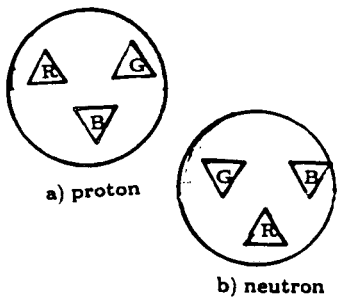

Figure 1: Schematic representation of a) a proton containing two up quarks and one down quark, and b) a neutron containing two down quarks and one up quark; each of the three quarks in a nucleon carries a different color charge.

The forces among quarks and electrons are understood within a general theoretical framework called the "standard model", that accounts for all interactions observed in high energy laboratory experiments to date. These are commonly categorized as the "strong", "weak" and "electromagnetic" interactions. In this lecture I will describe the standard model, and point out some of its limitations.

Probing for deeper structures in quarks and electrons defines the present frontier of particle physics. I will discuss some speculative ideas about extensions of the standard model and/or yet more fundamental forces that may underlie our present picture.

ELEMENTARY GLUE: QED AND QCD

It is well known that electrons are bound to the nucleus in an atom by the exchange of photons (γ) between the negatively charged electrons and the positively charged protons in the atomic nucleus. Photons are the quantum excitations of the electromagnetic field: a ray of light or a radio wave is a beam of photons. The exchange of photons creates an attractive force between particles of opposite electric charge. This is the electromagnetic force; its effects are described by the quantum field theory known as quantum electrodynamics or QED.

In a similar way, protons and neutrons are bound together within a nucleus by the exchange of particles called π-mesons, or pions. Pions are not elementary particles, but are themselves quark–antiquark bound states. Like quark bound

states they are color neutral, that is, a red quark is bound to an "anti–red" antiquark, etc. In other words, unlike the "atomic glue" (the photon), which is elementary (as far as we know today), the nuclear glue is not. Pion exchange is one manifestation of the strong nuclear force.

According to the standard model, quarks are in turn bound to one another inside nucleons by the emission and absorption of elementary quanta called gluons (g), believed to be the fundamental mediators of the strong force. Their effects are described by a quantum field theory similar to QED that goes by the name of quantum chromodynamics, or QCD.

However, gluons differ from the photon in that they are themselves carriers of the strong "color charge" to which they couple; in contrast, the photon, which couples to electromagnetic charge, is itself electrically neutral. Since gluons are carriers as well as mediators of the color charge, the theory predicts the existence of "glueballs", that is, bound states of gluons with no valence quarks or antiquarks. Such states are difficult to establish experimentally, but evidence for glueballs is actively being sought among the debris produced in elementary particle collisions.

Another consequence of this self–coupling of the gluon is that the color force between two colored particles increases in strength with increasing distance between the particles. As a result, quarks and gluons do not appear as free particles in nature. They exist only inside composite particles like nucleons and pions, generically known as "hadrons". The name is derived from the Greek *hadros* (thick, heavy); all quark bound states, or hadrons, are subject to the strong force.

When one tries to use a very high energy probe to split a hadron into its constituents, one finds instead that quark–antiquark pairs (as well as gluons) are created in the strong color field and rearrange themselves together with the original constituents to form more hadrons. One way to model this phenomenon is to imagine a *meson* (the generic name for quark–antiquark bound states), for example, as a string whose ends carry the valence quark quantum numbers that determine the flavor properties of the meson. When the string is stretched over a sufficiently large distance (in practice, a distance that is large in comparison

with the range of the nuclear force, which is about one fermi, or $10^{-13}cm$) the string tension becomes infinite, and the string breaks because it cannot be stretched further: the two pieces of the broken string correspond to two mesons (see Figure 2).

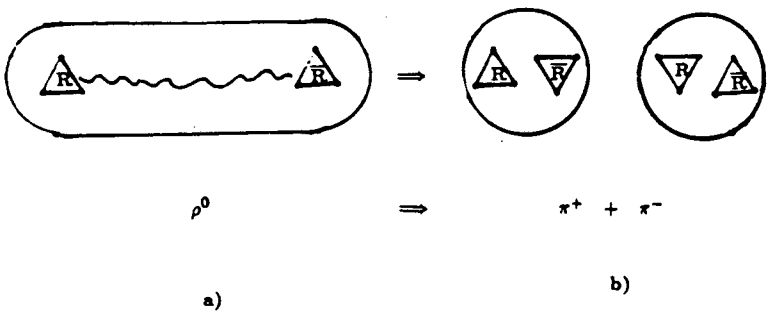

Figure 2: The neutral ρ–meson can be depicted as a quark and an antiquark attached to the ends of a string. At large distances the string tension becomes infinite; the string breaks, resulting in the creation of a color– and flavor–neutral $q\bar{q}$ pair. Thus the ρ breaks up into a pair of π–mesons, rather than a (confined) $q\bar{q}$ pair.

In spite of the fact that quarks and gluons do not themselves traverse particle detectors in an unbound state, the elementary interactions among them can nevertheless be studied in high energy laboratory experiments. This is because the hadronic debris resulting from a hard collision involving quarks and/or gluons arranges itself into collimated jets of particles. These jets leave visible tracks or electronic signals in detectors. The measured energy and direction of each high energy jet reflects the original energy and direction of an elementary quark or gluon from which the jet emanated. The hadronic jet is formed by a Bremsstrahlung process through which the primary quark or gluon radiates gluons and quark–antiquark pairs that ultimately (i.e. within a distance less than the "confinement radius" of about one fermi) convert to hadrons (mostly mesons). The collimated jet topology that results can be understood from the peaking towards small angles that is characteristic of a Bremsstrahlung distribution.

Jet production in e^+e^- collisions is illustrated in Figure 3 which shows

events recorded in the JADE detector at the DESY colliding ring facility in Hamburg, Germany, where electron and positron beams collide head on, each with an energy of 18 GeV (1 $GeV = 10^9$ electron Volts (eV), roughly the rest energy of a proton). The events shown are a) a collinear two–jet event resulting from the elementary process

$$e^+ + e^- \rightarrow \gamma \rightarrow q\bar{q}, \tag{1}$$

b) an event with two acollinear jets together with an energetic photon produced by Bremsstrahlung from one of the electrons or quarks in the process (1), and c) a three–jet event interpreted a hard gluon Bremsstrahlung by one of the quarks.

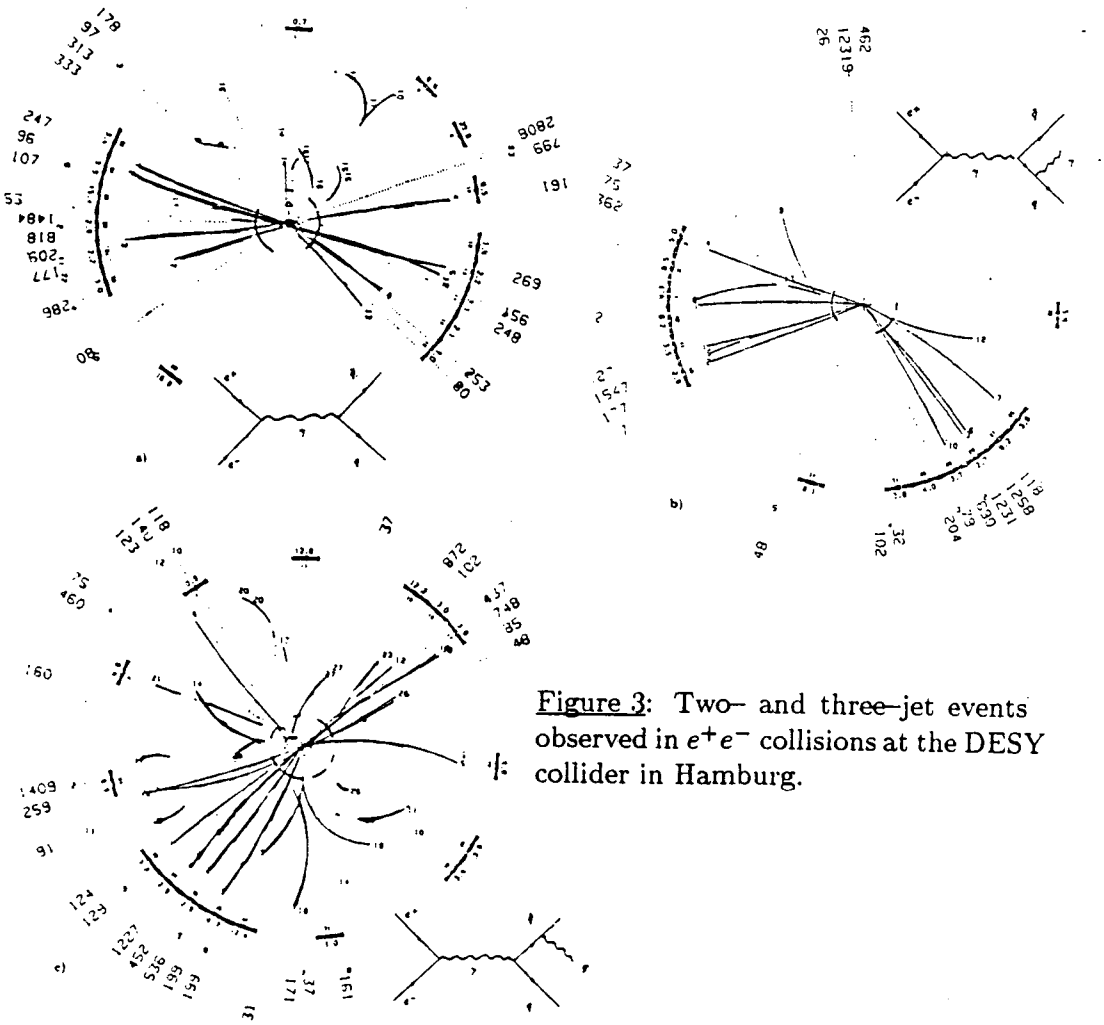

Figure 3: Two– and three–jet events observed in e^+e^- collisions at the DESY collider in Hamburg.

Figure 4 shows a "Lego plot" of the energy deposited in the Collider Detector at Fermilab (CDF) in Batavia, Illinois, by two quark and/or gluon jets emitted back to back at about a 90° angle with respect to colliding proton and antiproton beams, each with an energy close to a TeV, that is, $10^{12}eV$. A highly accelerated proton is in fact an ensemble of constituents including a colorless and flavorless "sea" of gluons and of quark and antiquark ($\bar{q}$) pairs, as well as its valence quarks. The proton's energy is shared among these constituents, each of which carries on average about a tenth to a sixth of the proton energy. The event shown in Figure 4 is interpreted as resulting from a head–on collision of one of the proton's constituents with a constituent of the antiproton, e.g.:

$$q + \bar{q} \rightarrow g \rightarrow q + \bar{q} \text{ or } g + g$$

or

$$g + g \rightarrow g \rightarrow q + \bar{q} \text{ or } g + g. \tag{2}$$

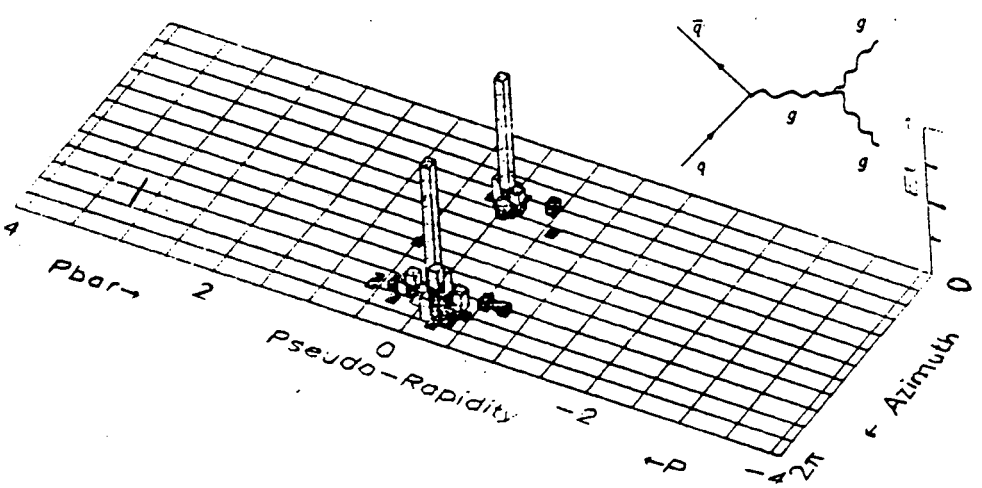

Figure 4: "Lego plot" of the energy deposited by two energetic hadron jets produced back–to–back, at approximately right angles to the colliding $p\bar{p}$ beams at Fermilab.

UNGLUING NUCLEAR MATTER: THE WEAK FORCE

The third elementary force of the standard model is the weak force, responsible for the radioactive β–decay of unstable nuclei. This decay occurs when, for example, one of the down quarks in a nucleon converts into an up quark emitting an electrically charged quantum known as a W–particle (Figure 5). The W rapidly converts into an electron and a neutrino, which is an electrically neutral, apparently massless particle. Together with the electrically neutral Z–particles,

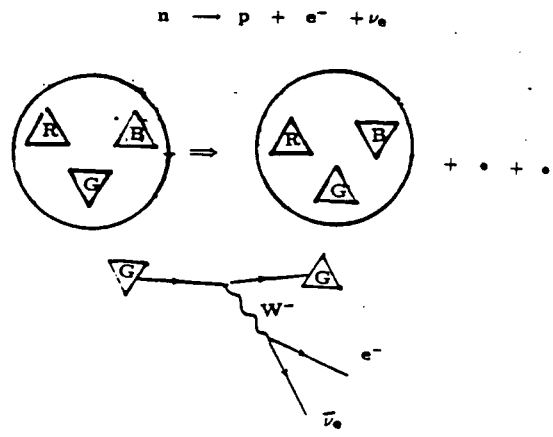

Figure 5: Schematic representation of neutron β–decay: one of the down quarks in the neutron converts into an up quark of the same color, emitting an $e^-\bar{\nu}_e$ pair by the exchange of a quantum of the W field.

the W's are the mediators of the weak force. Like gluons, they couple to one another—that is, they are carriers of the "weak charge", but unlike either the gluons or the photon, they are massive: the W and Z weigh, respectively, about 80 and 95 times the proton mass. They were discovered in 1983 in experiments using proton–antiproton ($p\bar{p}$) colliding beams at the European Center for Particle Physics, CERN, in Geneva, Switzerland. Their properties are being studied in detail both at CERN and at the higher energy $p\bar{p}$ collider at Fermilab. Figure 6 shows an example of an event recorded by the CDF detector at Fermilab which is interpreted as the production and subsequent decay of a W particle, e.g.,

$$\bar{u} + d \rightarrow W^-, \quad W^- \rightarrow e^- + \bar{\nu}_e. \tag{3}$$

The Figure shows the electron energy which is deposited in the detector via electromagnetic interactions. However, the weakly interacting neutrino leaves no trace of its passage, resulting in a large apparent imbalance of energy and momentum in the recorded event. This striking signal is very characteristic of W production and decay.

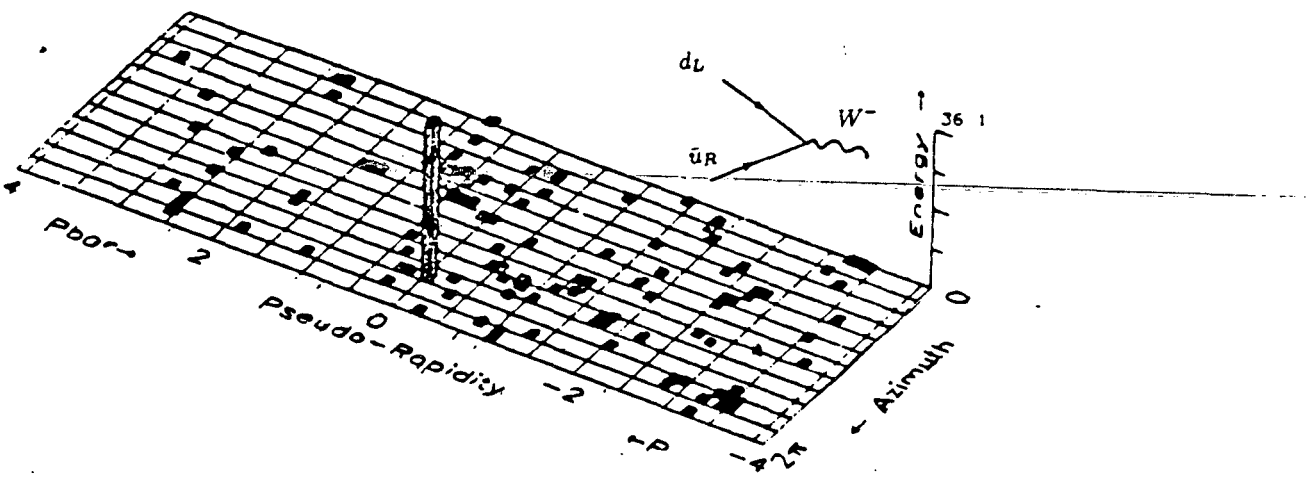

Figure 6: "Lego plot" of the energy deposited by an energetic, wide angle electron, interpreted as a decay product of a W–boson produced in $p\bar{p}$ collisions at Fermilab.

The properties of the Z will soon be studied in even greater detail at facilities where electrons collide with their antiparticles, positrons: a linear collider, SLC, that has just begun operation at Stanford University, and a higher energy, circular collider, LEP, whose construction is soon to be completed at CERN.

Ordinary matter is composed of electrons (e) and of up and down quarks (u and d). Quarks of each flavor carry one of three possible color charges. Together with the electron neutrino (ν_e), the neutral, massless particle emitted in radioactive β–decay, these particles are the members of what is referred to as the first family of matter particles. Two other families of matter particles are known to exist. Their members (Table 1) have properties identical to those of the first family, except that they are more massive (aside, possibly, from neutrinos, which have all been found to be massless within the experimental

errors).

Table 1: Elementary fermions are grouped into three families, each with leptons (ℓ) of two flavors and quarks (q) of two flavors and three colors (taken here as Red, Blue and Green). The known families are listed below with the fermion masses (m) and electric charges Q indicated. ($GeV = 10^3 MeV = 10^9 eV$)

Quarks	m_q	Q_q	Leptons	m_ℓ	Q_ℓ
$u_R u_B u_G$	a few	$+2/3$	ν_e	$< 18eV$	0
$d_R d_B d_G$	MeV	$-1/3$	e	$.5eV$	-1
$c_R c_B c_G$	$\approx 1.5GeV$	$+2/3$	ν_μ	$< \frac{1}{4}MeV$	0
$s_R s_B s_G$	$\sim 100MeV$	$-1/3$	μ	$106MeV$	-1
$t_R t_B t_G$	$> 60GeV$	$+2/3$	ν_τ	$< 35MeV$	0
$b_R b_B b_G$	$\approx 5GeV$	$-1/3$	τ	$1.8GeV$	-1

The quark flavors analogous to (u, d) for the second and third families, respectively, are called "charm" and "strangeness" (c, s) and "top" and "bottom" (t, b). The top quark is in fact so heavy that it has not yet been established experimentally, but few particle physicists doubt its existence. These heavy quarks live only briefly, decaying rapidly to lighter quarks by a mechanism similar to the $d \longrightarrow u$ transition of Figure 5 that induces β–decay. Thus the heaviest quark t can decay via a chain:

$$
\begin{array}{lllllllll}
t \longrightarrow & b & + & \ell^+ & + & \nu^\ell & & & \\
 & \hookrightarrow & c & + & \ell^- & + & \overline{\nu_\ell} & & \\
 & & \hookrightarrow & s & + & \ell^+ & + & \nu_\ell & \\
 & & & \hookrightarrow & \nu & + & \ell^- & + & \overline{\nu_\ell}
\end{array}
\tag{4}
$$

where ℓ stands for e, μ, or τ, except for the last two steps in the chain, in which there is insufficient energy release for production of the more massive τ. Each link in the chain occurs via the exchange of a W particle, as in Figure 5.

Each family also includes two types of leptons (ℓ, ν_ℓ), that is, particles that carry no color charge and thus do not interact with gluons, like (e, ν_e) of the first family. The electrically charged counterparts of the electron for the second and third families are called the muon (μ) and the τ-lepton, respectively. Like the heavy quarks, they are short-lived and decay to lighter leptons:

$$\tau^- \to \nu_\tau + e^- + \bar{\nu}_e \quad \text{or :} \quad \begin{array}{lllllll} \tau^- \to & \nu_\tau & + & \mu^- & + & \bar{\nu}_\mu & \\ & & & \hookrightarrow & \nu_\mu & + & e^- + \bar{\nu}_e \end{array} \tag{5}$$

Their companion neutrinos (ν_μ and ν_τ) may be stable.

All of the above matter particles are "fermions", which means that they are tiny spinning tops, carrying a half a unit (in units of Planck's constant $\hbar = h/2\pi$) of "spin" or intrinsic angular momentum. The elementary glue, that is, the quanta of the electromagnetic, color and weak fields (generically called gauge fields) carry one unit of spin. These spin–1 particles, called "vector bosons", are, respectively, the photon (γ), eight colored gluons (g), and the weak bosons W and Z. The interactions among the various particles are described by quantum field theories collectively known as "gauge theories." The W particles carry electromagnetic charge $(Q_{W^\pm} = \pm 1)$ as well as weak charge, that is, they also couple to the photon. Thus in the standard model the weak and electromagnetic forces are described together by what is referred to as the "electroweak" gauge theory.

SYMMETRY AND BROKEN SYMMETRY: GAUGE THEORIES

The strong color interactions are characterized by a high degree of symmetry. Particles with the same spin and flavor, but different color charges, have identical masses; in fact there is no way to distinguish experimentally among particles that differ only in their color charge. The weak and electromagnetic interactions are understood in the context of an "electroweak" theory according to which the laws of nature are such that members of a fermion family with the same color charge, but different electric charge (e.g., a red up quark and a red down quark, or the electron and its neutrino) should be similarly indistinguish-

able. Clearly this is not what we observe: the symmetry of the elementary laws of nature is not reflected in the world around us.

To understand symmetry and symmetry breaking, imagine that the earth is a perfect sphere with no magnetic field. An ant crawling over the earth's surface would be completely lost; it could not distinguish one place from another. Now turn on the earth's magnetic field and give the ant a compass. The ant can now distinguish the north pole from the south pole, but it doesn't know its position along the equator: the presence of the magnetic field reduces the original spherical symmetry of the earth to a cylindrical symmetry (Figure 7a).

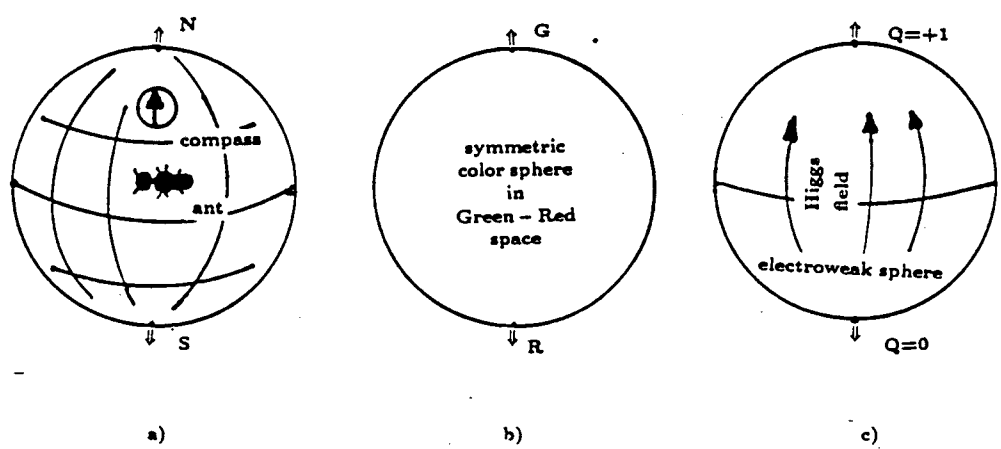

Figure 7: a) The spherical symmetry of the earth is broken by its magnetic field, leaving a residual cylindrical symmetry. b) The unbroken symmetry of QCD makes it impossible to distinguish one color from another. c) The conjectured "Higgs field" breaks the electroweak symmetry, making different electric charges distinguishable, but leaves a residual symmetry (conservation of total electric charge).

Next consider a sphere in an abstract space, such that the north pole represents green color charge and the south pole red (Figure 7b); the symmetry of the strong color interactions means that no position on this sphere is distinguishable from any other.

Finally, consider a sphere in another abstract space (Figure 7c) where the north and south poles correspond to electric charges differing by one unit. The observed spectrum of particles and their interactions can be understood if we assume the existence of a field—known as the Higgs field—which distinguishes the north and south poles of this sphere, leaving a residual "cylindrical" symmetry.

Just as a photon passing through matter moves at a velocity v less than the speed of light, c, due to its interactions with atomic electrons, the W and Z bosons interact with the Higgs field that permeates all space, and they cannot propagate with the speed of light; they acquire an "index of refraction", $n = v/c$ or equivalently, a rest mass: the velocity is related to energy E and momentum p by $v = pc/E$, where for a particle of mass m, $E^2 = (cp)^2 + (c^2m)^2$, so the "index of refraction" is related to the mass by

$$n = \frac{p}{\sqrt{p^2 + m^2c^2}} \rightarrow \begin{cases} 0 & p^2 \ll m^2c^2, \\ 1 & p^2 \gg m^2c^2. \end{cases} \tag{6}$$

We see that at energies which are large compared with the boson rest masses, these masses become negligible, and the W and Z propagate essentially with the speed of light. The photon does not interact with the Higgs field (corresponding to the residual cylindrical symmetry of the imagined sphere), and hence is exactly massless.

The mass m_W acquired by the heavy gauge boson W is proportional to the strength g_W of its coupling to the Higgs field and to the strength v of that field. The field strength

$$v = \frac{2m_W}{g_W} \simeq 250GeV \tag{7}$$

is known from the measurement of the free neutron lifetime. To understand this, first recall that the force

$$\vec{F} = \frac{\partial V}{\partial \vec{r}} \tag{8}$$

that attracts two oppositely charged particles at rest, separated by a distance r and with electric charges $\pm e$, arises from the Coulomb potential

$$V = \frac{e^2}{4\pi r} \tag{9}$$

that is characteristic of a static electromagnetic field. A force mediated by a massive particle with mass m and coupling strength g is instead derived from a Yukawa potential

$$V = \frac{g^2}{4\pi r} e^{-mrc/\hbar}, \tag{10}$$

with finite range $r_{int} = \hbar c/m$. This can be understood in terms of the Heisenberg uncertainty principal: The range of the interaction is the uncertainty in distance: $r_{int} = \hbar/\Delta p$, and mc is the minimum momentum uncertainty Δp required for the emission of a particle of mass m_W from a much lighter particle. For a force mediated by W–exchange, $m_W c = 80\ GeV/c$, and so $r_{int} \simeq 10^{-16} cm$, which is much smaller than the effective radius of the nucleon: $r_{\text{nucl.}} \simeq 10^{-13} cm$. As a consequence, the probability amplitude for neutron β–decay, which is determined as the Fourier transform of the potential (10), is suppressed by a factor proportional to the area $r_{int}^2 \propto m_W^{-2}$ over which the weak interaction is effective, and is therefore proportional to $v^{-2} = (g_W/2m_W)^2$. The coupling g_W has been independently determined by a series of measurements of weak transitions, including neutrino–induced interactions, and it was thus possible to predict accurately the mass of the W—as well as that of the Z—before they were directly produced in high energy $p\bar{p}$ collisions.

In a gauge field theory, each spin–one particle, or gauge boson, is identified with a symmetry of nature. In the unbroken symmetry phase (i.e. in the absence of a Higgs field) of the electroweak gauge theory, there are three gauge bosons $W_{1,2,3}$, with couplings of strength $g \equiv g_W$ to one another and to fermions. These three bosons correspond to the axes of rotation in an abstract three–dimensional space that represents flavor quantum numbers. In fact, the W's couple only to *left–spinning* fermions f_L, that is, fermions whose spin is anti–parallel to their momentum (as for a left–handed screw). Left spinning fermions are said to have one–half unit of *negative helicity*. Thus, for example, a rotation of 180° about the first or second axis (Figure 8) in this abstract space effects the transformations

$$u_L \leftrightarrow d_L, \quad \nu_{eL} \leftrightarrow e_L^- \tag{11}$$

(i.e. a rotation north pole $\leftrightarrow$ south pole in the sphere of Figure 7c). In the symmetric phase, the laws of nature are unchanged by arbitrary rotations about these axes.

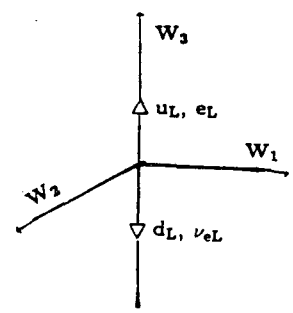

Figure 8: The three electroweak gauge bosons W_i correspond to three axes in an imaginary space. Fermions differing in electric charge by one unit correspond to equal and opposite positions along the third axis.

In addition there is a gauge boson B with couplings of strength g' to both left– and right–spinning fermions, and with no self–coupling (like the photon of QCD). The symmetry associated with B is a phase transformation on fermions:

$$f_i \rightarrow e^{i\alpha_i} f_i, \tag{12}$$

where f_i can be any right–spinning (f_R—possessing one half unit of *positive helicity*) or left–spinning fermion; the phase α_i depends on both the helicity and the flavor quantum numbers of the fermion f_i.

In the broken symmetry phase (i.e., in the presence of a background Higgs field), the physical states, that is, those states of well–defined mass, are linear combinations of the above, namely

$$W^+ = \frac{1}{\sqrt{2}}(W_1 + iW_2), \quad W^- = \frac{1}{\sqrt{2}}(W_1 - iW_2),$$
$$Z = cos\theta_w W_3 - sin\theta_w B, \quad \gamma = cos\theta_w B + sin\theta_w W_3. \tag{13}$$

The known QED couplings of the photon γ — which remains massless because the background Higgs field is electrically neutral — makes it possible to relate the mixing angle θ_w to the electromagnetic (e) and weak (g, g') coupling strengths:

$$sin\theta_w = \frac{e}{g}, \quad cos\theta_w = \frac{e}{g'}. \tag{14}$$

This mixing angle also determines the relative rates of various transitions mediated by Z–exchange, such as

$$\nu + f_i \rightarrow \nu + f_i. \tag{15}$$

Thus measurements of a variety of neutrino–induced processes allowed the determination of the parameter θ_w and consequently, via (14), the couplings g and g', which in turn gave predictions for the W and Z masses through Eq. (7) and an analogous relation for the Z–particle. The Z–mass turns out to be related to the W–mass by:

$$m_Z = \frac{m_W}{cos\theta_w}. \tag{16}$$

A characteristic feature of the couplings of gauge bosons to fermions is that emission or absorption of a gauge boson by a fermion leaves the helicity of the fermion unchanged. Equivalently, consider, a difermion system composed of a left–spinning fermion f_L and the antiparticle $\overline{(f'_L)}$ (which is right–spinning: $\overline{(f'_L)} \equiv (\bar{f}')_R$) of another left–spinning fermion, with no net orbital angular momentum (see Figure 9a). This difermion system has net helicity -1, which is the same as that of a circularly polarized photon or other gauge boson. It therefore has the correct spin quantum numbers to couple to spin–1 bosons, as in the processes (1) and (2).

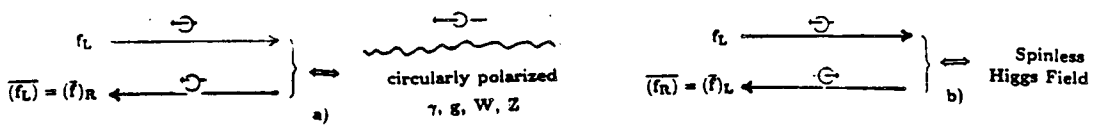

Figure 9: a) A fermion–antifermion pair of opposite helicities (and opposite momentum directions) has the correct angular momentum to emit a spin–1 gauge field quantum . b) A pair with the same helicities can couple to the spinless Higgs field.

On the other hand a difermion system composed of a left–spinning fermion f_L and the antiparticle $\overline{(f'_R)} \equiv (\bar{f}')_L$ of a right–spinning fermion, and with no net orbital angular momentum (Figure 9b), has net helicity 0, i.e., that of a spin–zero particle. In other words, emission or absorption of a spin–zero particle flips fermion helicity. Electrically charged quarks and leptons couple to the background Higgs field, and therefore propagate with a velocity less than the speed of light, that is, they acquire masses. As they propagate their helicity oscillates, which is precisely the property of a massive fermion. As far as we know, only left–spinning neutrinos occur in nature, and they may by exactly massless.

In the symmetric phase (no Higgs field), the fermions are necessarily massless because fermions of opposite helicity have different transformation properties under the symmetries of the gauge theory (e.g., (11,12)) and therefore left $\leftrightarrow$ right oscillations are forbidden. However, in contrast to the case of the massive gauge bosons, the coupling strengths of fermions to the Higgs field cannot be independently determined, and therefore the mass of the top quark, for example, cannot be predicted. This is one of the weaknesses of the standard model.

OPEN QUESTIONS: PHYSICS AT THE TEV SCALE

While the standard model successfully accounts for a very large body of experimental data, the origin of electroweak symmetry breaking and the na-

ture of the Higgs field are not understood. Another puzzle is the replication of fermion families. Why are there three families? Are there more? There is no understanding of the pattern of fermion masses, nor of the flavor mixing parameters that determine how fast heavy quarks and leptons decay to lighter ones via the chains (4) and (5). All of these parameters are determined by the couplings of fermions to the Higgs field; put another way, we do not understand why these couplings take the values that are observed. In particular, the couplings of fermions to the Higgs field seem to be the only couplings in nature that are not invariant under the CP operation which turns a fermion spinning parallel to its direction of motion into an antifermion spinning antiparallel. (C is the charge conjugation operation that turns a particle into an antiparticle of the same spin and momentum; P is the parity, or mirror reflection, operation that inverts momentum direction but not spin, and thus inverts helicity.) If CP were an exact symmetry of nature we would have no way of understanding the predominance of matter over antimatter in our universe, which made possible the formation of galaxies, planets, DNA,... and life.

Many theorists believe that these questions can be answered only by probes with energies higher than those accessible at facilities now in operation. A signpost for the requisite hard collision energy is provided by the scale of electroweak symmetry breaking which is fixed by the value of the Higgs field strength, $v = 2g_W/m_W$, corresponding to an energy of a fourth of a TeV. Since, among the known particles, the massive W and Z couple most strongly to the Higgs field, their collisions are expected to provide the most efficient probe of its nature and origin. W's and Z's are present in colliding hadrons or leptons because, like photons, they can be radiated from energetic quarks and leptons—but with reduced energy. Calculations indicate that W and Z collisions with up to one or two TeV of total energy will be probed at the proposed Superconducting Collider (SSC) that is planned for construction in Waxahachie, Texas. In the SSC protons of 20 TeV energy will collide head on. This will permit the observation of quark interactions with total collision energies of up to about 4 TeV, and of collisions between radiated bosons with a total energy of 1 or 2 TeV.

The simplest possibility for understanding electroweak symmetry breaking is the existence of an elementary spin–zero (Higgs) field that has a potential

energy–density which has a local maximum for vanishing field strength, and a global minimum at a constant value v of field strength, as illustrated by the "Mexican hat potential" of Figure 10. If this Higgs field is a vector on the imagined "electroweak sphere" of Figure 7c, and if it is nonvanishing, it must be oriented. The direction of its orientation defines the "north" and "south" poles on that sphere, that is, it distinguishes between particles of different charges and thus breaks the electroweak symmetry.

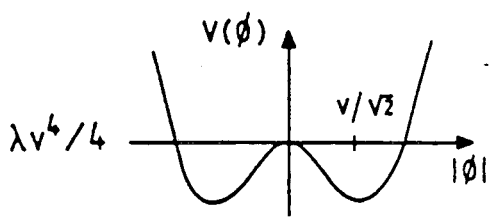

Figure 10: A scalar field potential energy density that has its minimum away from the symmetric point $|\phi| = 0$.

Consider, for example a complex scalar field which can be parametrized as

$$\varphi(x) = \frac{\rho(x)}{\sqrt{2}} e^{i\theta(x)/v} \tag{17}$$

where ρ and θ are real functions of the space–time point x. The potential energy–density

$$V(\varphi) \equiv V(\rho) = \frac{\lambda}{4}(\rho^2 - v^2)^2 \tag{18}$$

is minimized for $\rho = v$ or $|\varphi| = v/\sqrt{2}$. However, since V is invariant under phase transformations

$$\theta(x) \to \theta(x) + \alpha, \tag{19}$$

where α is a constant, the vacuum is degenerate. The background Higgs field

takes on a constant value

$$\langle\varphi\rangle_{vac} = \frac{v}{\sqrt{2}} e^{i\theta_0/v}$$

so as to minimize the energy density, but quantum excitations that change the value of θ cost no energy; these excitations correspond to states of massless particles with zero energy and momentum. Quite generally, for every degree of degeneracy of the vacuum with respect to a continuous transformation on the fields, there is a massless, spinless particle, called a Goldstone boson.

In a gauge theory in which the scalar fields couple to gauge boson fields, there is a larger symmetry, called a "gauge symmetry". For example if the spinless field φ defined in (17) is coupled to the electromagnetic field A_μ ($\mu = 0, \ldots, 3$ is a Lorentz index), the theory is invariant under phase transformations that depend on the space–time variable x, provided that the field A_μ is shifted by a total divergence:

$$\theta(x) \to \theta(x) + \alpha(x), \quad A_\mu \to A_\mu - \frac{1}{ev}\frac{\partial_\mu \alpha(x)}{\partial x^\mu}, \tag{20}$$

where e is the electric charge of φ. This gauge invariance allows one to make the choice $\alpha(x) = -\theta(x)$ with no observable consequences; with this choice the θ degree of freedom is apparently removed from the theory. It reappears as the longitudinally polarized component of the now massive "photon". Again quite generally, for every degree of vacuum degeneracy with respect to a *gauged* continuous transformation on the fields, the corresponding gauge boson acquires a mass. The electroweak symmetry is broken by the introduction of four real spinless fields, with a potential energy–density that has three degenerate directions in the space of field variables. The three associated massless particles are "eaten" by the massive $W^\pm$ and Z bosons to become their longitudinally polarized components.

However, there is always at least one massive scalar particle left over; in the above example, it corresponds to quantum excitations that move the field ρ away from its ground state value. The mass is determined by the curvature of the potential at its minimum; this gives

$$m_H^2 = 2\lambda v^2 = \frac{\lambda}{2}(TeV)^2, \tag{21}$$

for the mass of the "Higgs particle" $H \equiv \rho - v$, where I used the result (7) for the value of v in the electroweak theory, as inferred from β–decay data.

We see that the Higgs mass is determined by the parameter λ that also governs scalar self–interactions, that is, the terms quartic in the field ρ in the potential (18). A Higgs particle with a rest energy as high as a TeV could be discovered at the SSC. If it were more massive than that, W and Z collisions would grow rapidly in rate when their total collision energy exceeds a TeV. This is because their longitudinal components, which are really eaten scalar particles, also have strong couplings if the parameter λ is of order unity or larger. The study of these new W and Z interactions with enhanced rates would provide an alternative probe of the physics associated with electroweak symmetry breaking. These interactions could be observable at the SSC if it operates at its maximum design energy and luminosity.

However, the existence of an elementary Higgs particle is problematic because the rest energy of a spinless particle gets large contributions from quantum fluctuations; these are illustrated by the "loop diagrams" in Figure 11 that represent the emission and reabsorption of bosons and fermions by the Higgs field. When these effects are taken into account, it becomes difficult to understand how the Higgs mass can be as small as a TeV or so, as is required by the data and by the consistency of the theory. One can in fact show that allowing the quantum corrected value of the Higgs mass, and therefore the quantum corrected value of the coupling strength λ, to become arbitrarily large is not a viable option.

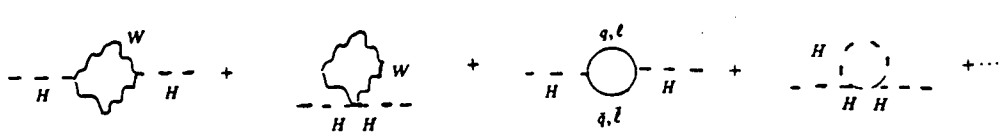

Figure 11: Quantum "loop" effects can contribute large corrections to the classical value of the scalar mass.

An alternative possibility is that the Higgs field is a composite field induced by fermion–antifermion pairs. It is believed that the effects of strong coupling at large distance in QCD lead to "quark condensation" (somewhat analogous to the formation of Cooper pairs), that is, nonvanishing vacuum expectation values of bilinear quark fields:

$$\langle \overline{q_L} q_R \rangle \equiv (v_\pi)^3 \approx (100 MeV)^3 \neq 0. \tag{22}$$

The condensate (22) has the effect of breaking the so–called chiral symmetry of QCD. If quarks were massless, QCD would be invariant under separate (constant) phase transformations on right– and left–spinning quarks:

$$q_L \rightarrow e^{i\alpha} q_L, \quad q_R \rightarrow e^{i\beta} q_R \tag{23}$$

because the couplings of quarks to gluons does not mix quarks of different helicity. Since the up and down quarks have very tiny masses (a few MeV), QCD is to a very good approximation invariant under the transformations (23) for $q = u, d$. The nonvanishing of (22) at the QCD vacuum, i.e. the state of lowest energy, breaks invariance under the chiral transformations (23) and implies a vacuum degeneracy. This phenomenon explains many features of the observed mass spectrum of hadrons, in particular the massiveness of the nucleons N: $m_N \gg 3m_q$, and the very small pion masses: $m_\pi \approx \frac{1}{7} m_N$. According to this picture, if u and d were exactly massless, so would be the pions: they would be the Goldstone bosons associated with the vacuum degeneracies of the chiral symmetric theory.

The condensate (22) also breaks the electroweak gauge symmetry, which involves separate transformations among left– and right–spinning quarks. If there were no other source of electroweak symmetry breaking, the pions would be eaten by the $W^\pm$ and Z particles which would acquire masses of order

$$m_W = cos\theta_w m_Z = \frac{g_W v_\pi}{2} \approx 30 MeV. \tag{24}$$

To get a value of v as large the observed one (in other words to get a sufficiently large W mass) from the fermion condensation mechanism requires

the introduction of new fermions, called "technifermions" that interact very strongly via a new force, "technicolor", transmitted by "technigluons". These new techniparticles, like quarks and gluons, would exist in bound states that could be produced only at collision energies as high as those to be made available at the SSC.

Alternatively, the potentially large quantum corrections to the Higgs rest energy could be damped if the theory possessed a larger symmetry, called supersymmetry, which relates fermions (particles with half integral spin) to bosons (particles with integral spin). This is because fermion loops and boson loops in the quantum corrections of Figure 11 contribute with opposite signs. If supersymmetry were an exact symmetry of nature, there would be equal numbers of fermions and bosons occurring in pairs with equal mass, and their couplings to the Higgs particle would be related in such a way that the quantum corrections from boson loops would exactly cancel those from fermion loops. We know that supersymmetry is not an exact symmetry of nature: fermion and bosons are not observed in equal mass pairs. However if this lack of apparent supersymmetry is due to some symmetry breaking mechanism (similar to the electroweak gauge symmetry breaking) that gives large masses to the partners of the observed particles, the quantum corrections would still be damped by a factor proportional to the boson–fermion mass splitting ΔM. In other words, quantum effects would contribute a correction to the Higgs mass of order:

$$\Delta m_H^2 \sim \frac{g^2}{16\pi^2}\Delta M^2. \tag{25}$$

A Higgs mass of a TeV or less could be understood if $\Delta M \leq 1TeV$.

According to this conjecture, every known particle has a "superpartner" or companion "sparticle" with identical properties (mass, electric charge...), except that it differs in spin by one half unit. Thus the spin–$\frac{1}{2}$ particles of the standard model imply the existence of partner spin–0 particles, and conversely:

Spin = 1/2	$\Longleftrightarrow$	Spin = 0
quarks(q)	$\Longrightarrow$	squarks($\tilde{q}$)
leptons(ℓ)	$\Longrightarrow$	sleptons($\tilde{\ell}$)
neutrinos(ν)	$\Longrightarrow$	sneutrinos($\tilde{\nu}$)
Higgsino($\tilde{H}$)	$\Longleftarrow$	Higgs(H)

Similarly, the spin–1 gauge bosons of the this model should be accompanied by spins–$\frac{1}{2}$ "gauginos": gluinos, the photino, the Wino...

Spin = 1	$\Longleftrightarrow$	Spin = 1/2
g	$\Longrightarrow$	$\tilde{g}$
γ	$\Longrightarrow$	$\tilde{\gamma}$
$W^{\pm}$	$\Longrightarrow$	$\tilde{W}^{\pm}$
Z	$\Longrightarrow$	$\tilde{Z}$

These sparticles are being sought, so far unsuccessfully, at accelerator facilities throughout the world. It is not possible to make precise predictions about their masses, but if supersymmetry plays a role in determining the scale of electroweak gauge symmetry breaking, at least some of them should have masses less that a TeV, and therefore accessible to planned, if not currently operating, machines. Squarks and gluinos would be abundantly produced at $p\bar{p}$ or pp collider facilities of sufficient energy, and any electrically charged sparticle would be produced together with its "antisparticle" in sufficiently energetic e^+e^- collisions.

SPECULATIONS: PHYSICS NEAR THE PLANCK SCALE

The technicolor hypothesis replaces elementary spin–zero fields with fermion–antifermion composite spinless fields. Yet another possibility is that quarks and leptons are themselves composite and that some substructure would by revealed by analysing data from high energy scattering experiments. Quarks and/or leptons that have common constituents are expected to have additional, hitherto unobserved, very short range interactions arising from the elementary couplings of their constituents. At energies E that are small in comparison with the inverse range r_c of these new interactions: $(r_c E/\hbar c)^2 \ll 1$, these interactions are suppressed in rate relative to the standard model gauge interactions by a factor

$(r_c E/\hbar c)^4$. However their effects can be observable at energies that are considerably smaller than $\hbar c r_c^{-1}$. The absence of such effects in present experimental data suggests that

$$r_c < \hbar c (TeV)^{-1} \approx 10^{-17} cm, \tag{26}$$

a result which implies that the scale at which quark and/or lepton compositeness becomes manifest is probably too large to be a relevant factor in determining the scale of electroweak symmetry breaking.

A more fashionable idea at present is that elementary "particles" are not particles at all, but rather the lowest vibrational modes of tiny strings—open strings or closed strings, see Figure 12—with an extension of the order of the Planck length, about $10^{-33} cm$. The excited string modes would have masses $M^2 \sim \hbar T/c^3$, where T is the string tension that is assumed to be governed by the value G_N of Newton's gravitational constant:

$$\hbar c T \sim G_N^{-1} \sim (10^{19} GeV)^2. \tag{27}$$

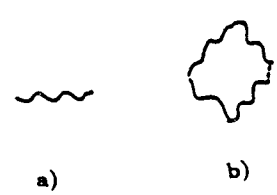

Figure 12: According to superstring theory the observed particles are the lowest vibrational modes of a) open strings (gauge bosons) and b) closed strings (graviton).

When supersymmetry is included, this "superstring" theory provides the only known possibility for a consistent quantum theory of gravity. It suggests that space–time is actually ten dimensional, but with six dimensions curled up with a radius comparable to the Planck length. In the context of superstring theory, many new exotic particles (in addition to the superpartners of ordinary particles) are predicted. Some of these could be produced at the present or

planned accelerator facilities. Others would interact with ordinary matter only with couplings of gravitational strength, that is, too weakly to be produced in laboratory experiments. They could, however, have implications for cosmology.

It is also conjectured that higher symmetries entail couplings among quarks and leptons that can induce the proton to decay to leptons and pions or other mesons. Together with CP violation, proton instability could account for the existence of matter in today's universe. Evidence for proton decay has been sought unsuccessfully in deep mine experiments. If they exist, the interactions responsible for proton decay are probably far too weak to be detected in accelerator experiments. However new particles discovered at or below the TeV scale could give clues to the underlying theory, which in turn could shed light on questions such as proton instability, the density of matter in the universe and the origin of galaxy formation, among many others.

THE VERY EARLY UNIVERSE

According to the Big Bang theory, the universe began with an explosion yielding a hot dense gas of elementary particles that subsequently expanded and cooled. Its evolution to the presently observed universe was determined by the total number of particle species and by the properties of their interactions at very high energies. The growing field of "particle astrophysics" involves the search for relic particles from the Big Bang, in particular, particle species that might have not been been observed in high energy accelerator experiments. Observational cosmology has in fact provided evidence for the presence of nonluminous matter in galactic halos. In addition, there are theoretical arguments which suggest that nuclear and atomic matter make up only a small fraction of the total matter in the universe. Perhaps the presence of superstring–predicted states with couplings to ordinary particles only through interactions of gravitational strength could account for this nonluminous matter. Other candidates for "dark matter" include massive neutrinos, stable sparticles, black holes... The determination of the nature of dark matter is in turn a crucial element that is needed for our understanding of the process through which galaxies were formed from density fluctuations in an otherwise homogenous early universe.

The evolution of the very early universe may have involved phase transitions analogous to the condensation of a gas or the freezing of a liquid. The Higgs field is similar to a ferromagnetic material, in which the lowest energy state is one with all electron spins aligned. Spin alignment implies a direction; the choice this of direction breaks the rotational symmetry of the laws of nature, just as the choice of a Higgs field orientation breaks the electroweak symmetry. In the ferromagnet, rotational symmetry can be restored by heating: the hot, energetic electrons become randomly oriented and there is no longer a special, preferred direction. Similarly, the electroweak symmetry should have been restored in the hot early universe. If the universe supercooled in the false, symmetric vacuum, this would have created a constant energy density that would have caused the universe to expand exponentially until the transition to the lower energy, asymmetric phase occurred. Such a period of exponential expansion could explain cosmological puzzles like the homogeneity, isotropy and flatness of the present universe. A consequence of this scenario is that the universe is closed, which in turn implies that the mass density of the observed universe is much greater that the density that can be accounted for by ordinary matter. This is the theoretical argument in support of the existence of dark matter that I alluded to above.

Returning to the standard model of elementary particles, it is in fact known that the specific phase transition associated with electroweak symmetry breaking cannot have led to the inflationary epoch just described. However if there is a more fundamental theory underlying the standard model, and if that theory possesses still higher degrees of symmetry, there may have been many other, earlier phase transitions in the cosmological evolution. Understanding the origin of one such phase transition, which has an energy scale that appears to be accessible for study at achievable accelerator energies, would have profound implications for cosmology as well as for particle physics.

LAWRENCE BERKELEY LABORATORY
TECHNICAL INFORMATION DEPARTMENT
1 CYCLOTRON ROAD
BERKELEY, CALIFORNIA 94720