UC-95d

LBL-27315

Lawrence Berkeley Laboratory
UNIVERSITY OF CALIFORNIA

APPLIED SCIENCE DIVISION

Presented at the AEE-World Energy Engineering Congress, Atlanta, GA, October 25–27, 1989, and to be published in the Proceedings

The Energy Conservation Potential Associated with Thermally Efficient Fluorescent Fixtures

M. Sminovitch, F. Rubinstein,
R. Verderber, and D. Crawford

June 1989

For Reference

Not to be taken from this room

APPLIED SCIENCE DIVISION

LBL-27315
Copy 1
Bldg. 50 Library.

Prepared for the U.S. Department of Energy under Contract Number DE-AC03-76SF00098.

DISCLAIMER

This document was prepared as an account of work sponsored by the United States Government. While this document is believed to contain correct information, neither the United States Government nor any agency thereof, nor the Regents of the University of California, nor any of their employees, makes any warranty, express or implied, or assumes any legal responsibility for the accuracy, completeness, or usefulness of any information, apparatus, product, or process disclosed, or represents that its use would not infringe privately owned rights. Reference herein to any specific commercial product, process, or service by its trade name, trademark, manufacturer, or otherwise, does not necessarily constitute or imply its endorsement, recommendation, or favoring by the United States Government or any agency thereof, or the Regents of the University of California. The views and opinions of authors expressed herein do not necessarily state or reflect those of the United States Government or any agency thereof or the Regents of the University of California.

Published in the Proceedings of the 12th World Energy Engineering Congress, Atlanta, GA, 25-27 October 1989

LBL-27315
L-137

THE ENERGY CONSERVATION POTENTIAL ASSOCIATED WITH THERMALLY EFFICIENT FLUORESCENT FIXTURES

M. Siminovitch, F. Rubinstein, R. Verderber and D. Crawford

Lighting Systems Research Group
Lawrence Berkeley Laboratory
Berkeley, California 94720

June 1989

ACKNOWLEDGEMENT

This work was also supported by the Assistant Secretary for Conservation and Renewable Energy, Office of Buildings and Community Systems, Building Equipment Division of the U.S. Department of Energy under Contract No. DE-ACO3-76SFOOO98.

THE ENERGY CONSERVATION POTENTIAL ASSOCIATED WITH THERMALLY EFFICIENT FLUORESCENT FIXTURES.

Michael Siminovitch, Francis Rubinstein, Rudy Verderber
and Douglas Crawford

Lighting Systems Research Group
Lawrence Berkeley Laboratory
University of California
Berkeley, California 94720

ABSTRACT

This paper describes the energy conservation potential associated with thermally efficient fluorescent fixtures. Various approaches to improving fixture efficiency through the optimization of lamp wall temperature are discussed. The energy saving potential using thermally efficient fixtures is estimated for a sample lighting layout for an office space. This analysis indicates that both power density and the number of fixtures can be reduced with thermally efficient fixtures. Conservation potential on a national level is also estimated, using market profiles obtained from fixture manufacturers in conjunction with measured fixture performance data.

INTRODUCTION

Most efforts towards improving the efficiency of fluorescent lighting systems have focused on developing more efficacious lamps and ballasts and improved energy management. Methods for increasing the fixture efficiency by optimizing the thermal operating characteristics of the fluorescent lamp system are often overlooked. Fluorescent lamps are highly sensitive to changes in minimum lamp wall temperature (MLWT) as shown in Figure 1.

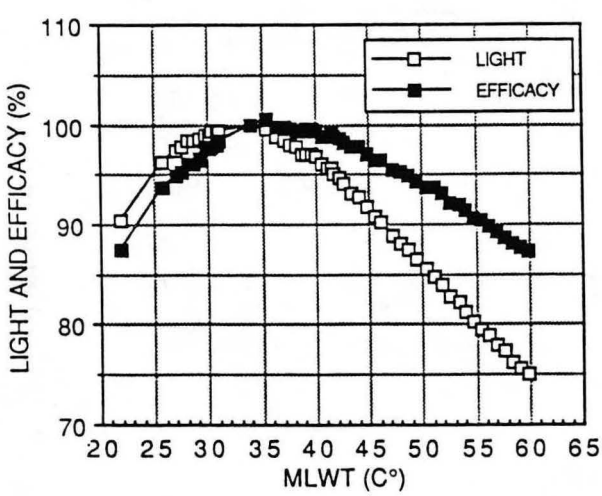

FIGURE 1. LIGHT OUTPUT AND EFFICACY

For the standard F40 lamp/CBM (Certified Ballast Manufacturers) ballast system shown, light output is maximal at a MLWT of 37° (±1°), corresponding to an ambient temperature of 25°C [1,2,3]. This is also the temperature condition at which the manufacturer rates the lamp's lumen output. System efficacy (the ratio of light output to input power) generally maximizes at a slightly higher MLWT (40°C). Fluorescent lamps operated at ambient temperatures of 25-30°C are near their maximally efficacious MLWT. However, when lamps are operated in a typical enclosed fixture, the ambient temperature and MLWT are higher than optimal due to the constricted thermal environment surrounding the lamps. Measurements indicate that MLWTs of 55-60°C are obtained in typical enclosed fixtures. At these temperatures, light output is 25% lower than maximum. Even more important, system efficacy is down 12% from maximum at these MLWTs. Improving the system's thermal performance requires the MLWT to be reduced closer to the optimum range [4,5].

Existing and developing technologies have been shown to reduce lamp wall temperatures inside fluorescent fixtures. These techniques include lamp compartment extract with air flow fixtures, natural convective cooling of the lamp compartment, and direct lamp spot cooling using thermo-electric and heat pipe devices. These techniques can be employed to obtain thermally efficient fixture configurations by allowing the lamps to operate at or near their maximum performance which can result in significant energy and capital cost savings when applied to a lighting layout.

This paper describes the use of thermal control approaches to reduce operating MLWTs inside fixtures and describes the potential for energy conservation that can be realized with thermally efficient fixtures. A sample lighting layout is used to illustrate the potential associated with thermally efficient fixture systems and this information is projected using fixture market profile information to estimate national energy conservation potentials.

THERMAL CONTROL SYSTEMS

There are two approaches that can be employed to improve the thermal performance of lamp/ballast systems inside fixtures: spot cooling systems that directly reduce the temperature on the surface of the lamp and lamp compartment cooling which reduces MLWT by convection.

Spot cooling techniques have been demonstrated with the use of small thermo-electric Peltier devices which are attached to the lamp wall inside a fixture. The Peltier device produces a localized cooling effect on the surface of the lamp. Optimum lamp wall temperature can be maintained by controlling the electrical input characteristics to the device. Experimental studies indicate that optimum light output and efficacy can be maintained over a wide range of temperatures with approximately 1/2 watt of input power. Figure 2 shows a cross section of the external Peltier system attached to a lamp. This technique is currently being developed as an integrated system within the end cap of a typical lamp. Figure 3 shows a cross section detail of the system being developed. This concept is intended to allow the lamp to produce maximum light output independent of the surrounding ambient temperature conditions encountered with a fixture [6,7].

Another spot cooling technique uses a thermally conductive heat pipe to conduct heat away from a small area of the lamps thereby reducing lamp wall temperature. The conductive heat pipe contains a conductive working fluid which transfers heat utilizing the latent heat of vaporization. Heat that is conducted along the length is dissipated with a fin or heat exchanger. This system can be attached to the lamps to convey heat through the envelope of the fixture to the plenum space where it is dissipated by convection. Figure 4 shows a cross section of the fixture showing a heat pipe positioned on the lamps.
Lamps can be cooled using a flexible heat sink with heat conductive fluids. These encapsulated thermally conductive fluids can be placed between the lamps and the top of the fixture housing to conduct heat away from the lamps to the envelop of the fixture where it is dissipated to the plenum or ambient surround. Figure 5 shows a cross section of a fixture with a flexible heat sink.

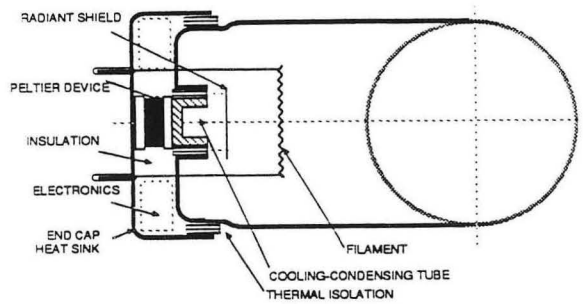

FIGURE 3. INTERNAL PELTIER DEVICE AT END CAP LOCATION

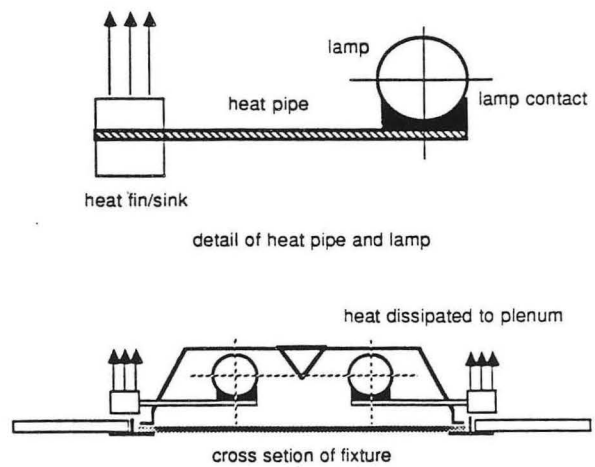

FIGURE 4. HEAT PIPE IN FIXTURE

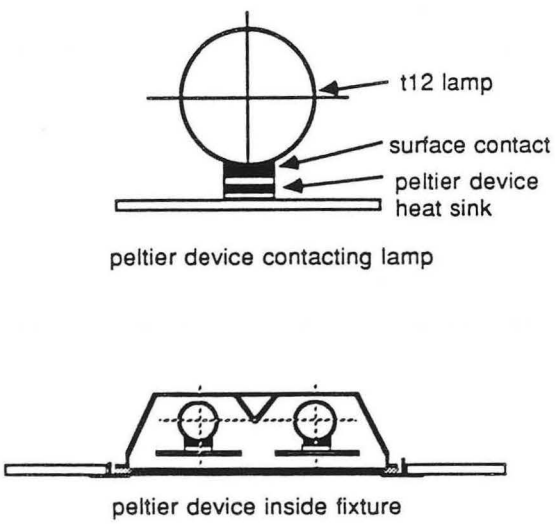

FIGURE 2. EXTERNAL PELTIER ATTACHED TO LAMPS

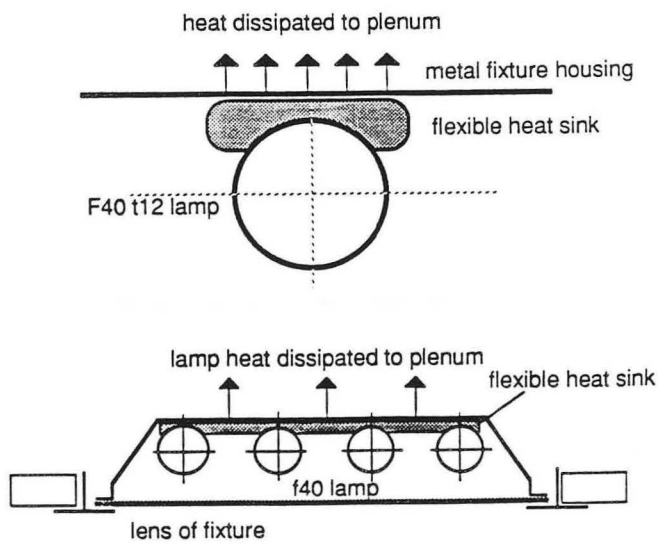

FIGURE 5. LIQUID HEAT SINK ATTACHED TO LAMPS

Lamp compartment cooling approaches rely on convective cooling of the lamps inside the fixture. This convection is induced mechanically by integrating the return air system with the fixture. Laboratory studies of air handling fixtures have shown that MLWT can range between 35°C and 40°C with the use of lamp compartment extract where the room air is drawn through the compartment and into the plenum. This air flow approach results in a convective cooling of the surface of the lamp reducing lamp wall temperatures 15-20 °C, depending upon the volumetric flow rate. At these MLWTs the lamps are operating at or near optimum in terms of light output and efficacy. Figure 6 shows a schematic of the typical air flow pattern through a lens type fixture.

Convective cooling of the lamp compartment can be obtained naturally by designing the envelope of the fixture with inlet and outlet vents to induce convection as a function of the differential in temperature and air density. This natural convection can produce 10-15°C reductions in lamp wall temperature in comparison to static configurations. These approaches are well suited to fixture applications where it is impossible to integrate a return air function using mechanical ventilation. This includes most surface mounted fixtures, enclosed pendant, and wall mounted types.

Figure 7 shows a schematic of a typical surface mounted wrap around fixture. The envelope of this fixture was modified with small venting apertures to promote natural convection through the compartment. The first section drawing shows the standard fixture with an operating MLWT of 59°C. The second section drawing shows the fixture mounted 1-inch from the ceiling with top, side, and bottom vents. These venting configurations promote a natural convection through the compartment resulting in a reduction in MLWT from approximately 59°C to 45°C .

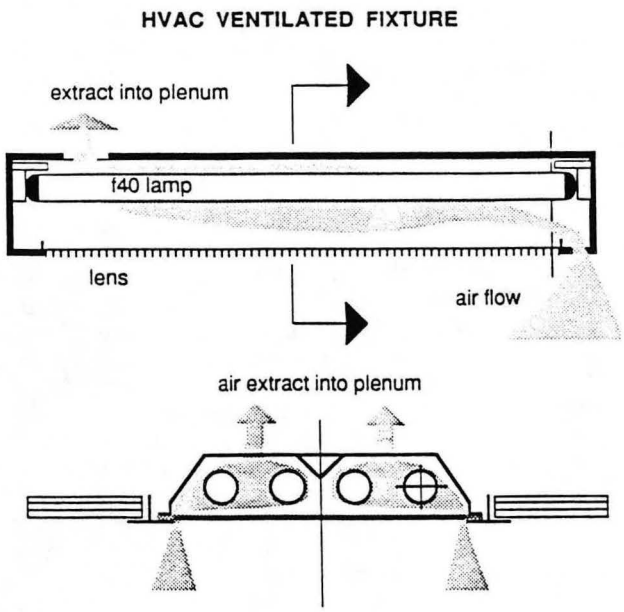

FIGURE 6. HVAC VENTED FIXTURE

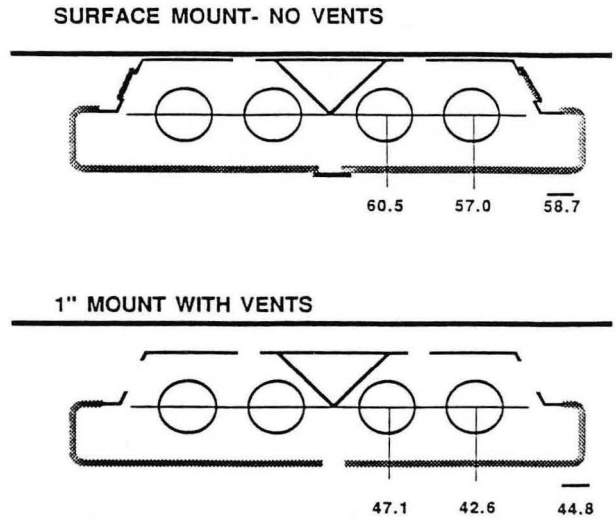

FIGURE 7. CONVECTIVE VENTING OF FIXTURE

ENERGY CONSERVATION POTENTIAL

We illustrate the energy conservation potential of thermally efficient fixtures by modeling a lighting layout for a 10,000 square foot office space. Two lighting designs for 70 foot candles will be developed for both a standard 4 lamp lensed fixture and a hypothetical thermally efficient 4 lamp lensed fixture. The number of fixtures to maintain 70 foot candles will be determined in conjunction with the corresponding power requirements and power density. Calculations for both layouts will be based on the standard 40 watt lamps and CBM ballasts [8,9].

For the standard 4 lamp lens troffer, the lamps will operate at approximately 55-57°C. For the thermally efficient fixture, we assume an optimum MLWT of 35-40°C at which point the lamps are at their maximum light output. These reductions in lamp wall temperature can be achieved by various approaches previously described.

Figure 8 summarizes the operating and design characteristics for both the standard fixture and the thermally efficient fixture. The differential in lamp lumens in the fixture is due to the difference in MLWT for the two systems. Work plane lumens is determined by using a factor to account for both optical efficiency and light losses that occur over time. This factor is estimated to be .64 and in this comparison it is equally applied in both cases. Power is based on measured performance data. The number of fixtures is determined knowing the illuminance level, square footage, and the relative quantity of work plane lumens supplied by both fixtures.

The results of this layout comparison show a reduction in both the number of fixtures and the relative power density with the thermally efficient fixture. The reduction in fixtures is due to the increase in lumen output from the thermally efficient fixture as the lamps are operating at the maximum output. The reduction in power density is a function of the increase in system efficacy that occurs with cooler lamp operation within the thermally efficient fixture.

Figure 9 shows the change in lamp lumen output within the fixture as a function of MLWT. Lumen output ranges from a maximum of 2900 lumens at 35-37°C to a minimum of 2242 lumens at 57°C, illustrating the functional relationship between light output and MLWT. The change in lumen output is reflected in the number of fixtures required to maintain 70 foot candles. With increasing MLWT, there is an increase in the number of fixtures required to maintain 70 foot candles as a function of the light loss that occur.

Figure 10 shows the percent reduction in both power density and the number of fixtures required as a function of using thermally efficient fixtures in comparison with the standard fixture. Using a thermally efficient fixture operating at an optimum MLWT, there is approximately 23% reduction in the number of fixtures required corresponding to the increase in lamp lumen output in comparison to the standard fixture. There is a corresponding decrease of 10-12% in power density as a function of the increase in system efficacy. Power density reductions are not the same as the fixture reductions as there is a progressive increase in power with cooler lamp operation. However, this increase in power is more than offset by the increase in efficacy that occurs with cooler lamp operation.

	MLWT=55-60C° standard lens fixture	MLWT=35-40C° thermally efficient fixture
A) bare lamp lumens with CBM ballast	2,900	2,900
B) lamp lumens in the fixture	2,242	2,900
C) total fixture lumens (four lamps)	8,968	11,600
D) work plane lumens per fixture =Cx.64	5,739	7,424
E) power per fixture watts	162	186
F) number of fixtures	122	94
G) total power=FxE watts	19,764	17,484
H) power density =G/10,000	1.97	1.74

FIGURE 8. OPERATING CHARACTERISTICS FOR BOTH FIXTURE SYSTEMS

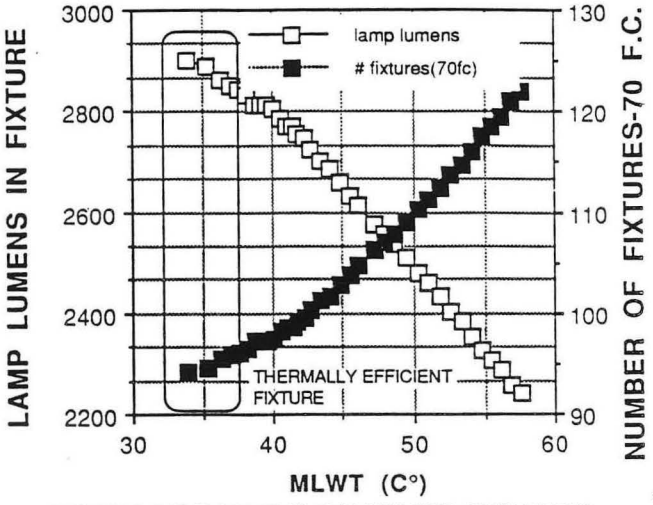

FIGURE 9. LAMP LUMENS AND NUMBER OF FIXTURES

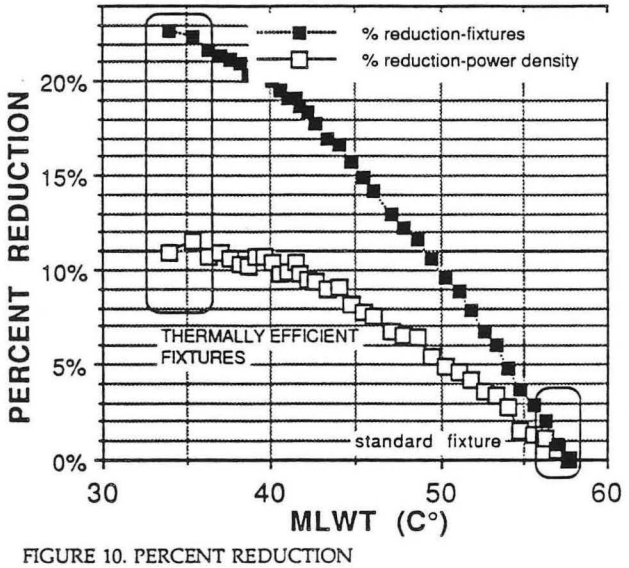

FIGURE 10. PERCENT REDUCTION

ENERGY BENEFITS

Figure 11 shows the energy saving realized with the the use of the thermally efficient fixtures for the layout described above. Total energy use for both cases is determined based on 3000 hours of operation per year and an energy cost of .10 cents per kwh. The total energy saving obtained with use of the thermally efficient fixture is approximately 6,852 kwh or a total annual saving of $685.00. Conservation benefits are also obtained in terms of reduced fixture hardware and labor required as a function of the reduction in the number of fixtures in comparison to conventional fixtures.

Figure 11 shows a summary of the 3 levels of savings that could be obtained with thermally efficient fixtures in this particular layout. Fixture savings are determined using the differential in the number of fixtures required for each layout. Total fixture savings are determined using a cost estimate of $60.00 per fixture. Savings in installation costs are based on a cost of $40.00 per fixture and the reduction in the number of fixtures.

	MLWT=55-60C°	MLWT=35-40C°
	standard fixture	thermally efficient fixture
number of fixtures	122	94
total power kw	19.76	17.48
total energy kwh (3000 hrs/yr)	59,292	52,440
total energy cost (.10$/kwh)	5,929.00	5,244.00
annual energy savings (kwh)		6,852
value of energy saving		685.00
fixture cost savings based on $60/fixture		1680.00
installation cost savings based on $40/fixture		1120.00

FIGURE 11. ENERGY AND FIXTURE COST SAVINGS

COST BENEFIT

It is understood that thermally efficient fixtures will require a technology improvement that will undoubtedly add to the cost of the fixture. The following is a analysis is an estimate of the cost increase that would be available to the manufacturer as a function of the energy saving potential. This cost increase is expressed on a per fixture basis and is applied to the manufacturers base cost of $26.00. Figure 12 shows the added cost potential per fixture over five years. This cost potential is based on the annual energy savings obtained with this fixture, divided by the number of fixtures. The total cost potential based on the period of energy saving is shown as simply the sum of the potential available and the base manufacturers fixture cost. For example, if one were to base their cost benefit analysis one a one year pay back the maximum added cost to obtain this savings would be approximately $7.00. With a two year analysis approximately $15.00 could be added to the cost of the fixture justifying a $40.00 fixture in comparison to a standard fixture at $26.00 [10].

The graph indicates that at 3-1/2 years, the energy conservation potential would justify an approximate doubling in the manufacturers cost of the thermally efficient fixture in comparison to the standard fixture.

NATIONAL ENERGY CONSERVATION POTENTIAL

From the previous analyses it was shown that thermally efficient fixtures can have a significant energy and material conservation potential in respect to the lighting layout application presented. In this part of the paper an estimate of the national energy conservation potential is projected to illustrate the potential of thermally efficient fixtures. In order to project conservation potentials, it is necessary to develop an estimate of the existing fixture market in terms of fixture type and the relative volume of sales in conjunction with an estimate of the lamp wall temperature conditions.

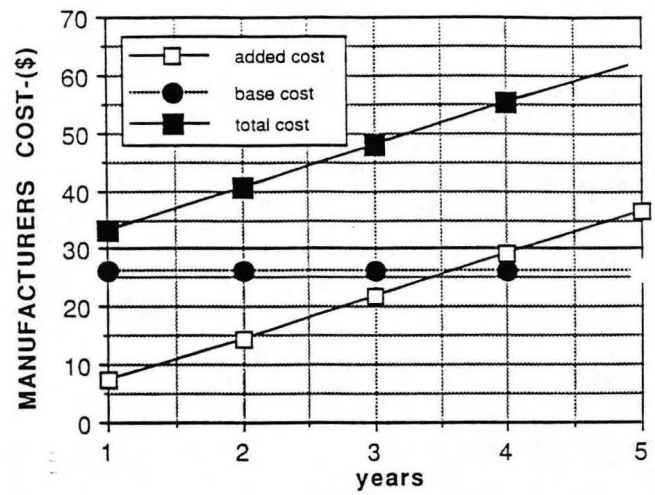

FIGURE 12. ADDED COST POTENTIAL

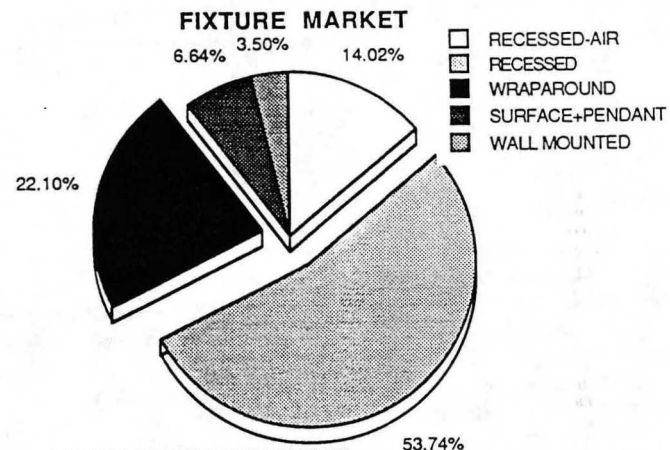

FIGURE 13. FIXTURE MARKET

Figure 13 shows a market distribution profile for office commercial type fluorescent fixtures.(industrial and strip fixtures are not included in this study). There are principally 3 types of fixtures; recessed, recessed air handling, and wrap around. Recessed fixtures are typically 2 x 4-foot fluorescent fixtures that are laid in to a suspended t-bar type ceiling with a plenum above. These fixtures represent the majority of sales accounting for approximately 50% of the market. Recessed air handling fixtures are also of the lay in configuration, however, they are designed to be integrated with the HVAC system by extracting the return air through the lamp compartment. Air handling fixture types represent a smaller sector of the market, approximately 14%. This is due primarily to the higher cost associated with air handling fixture types. Wrap around fixtures represent approximately 25% of the market and are typically surface mounted directly on to the ceiling plane [10].

Approaches to improve the thermal efficiency of fixtures can be applied directly to recessed non-air handling fixtures and to wrap around types. As previously discussed, air handling fixtures that incorporate compartment extract are already operating near maximum performance in terms of light output due to reduced lamp wall temperature conditions.

	MLWT=50-53C°		MLWT=35-40C°	
	average fixture		thermally efficient fixture	
	40-watt	35-watt	40-watt	35-watt
lumen output in fixture	4930	4233	5800	4980
power	83	72	93	79
efficacy	59	59	63	63
lumens required	1.74×10^{11}		1.74×10^{11}	
number of two lamp systems	38×10^{6}		32×10^{6}	
total power-watts	2.945×10^{9}		2.762×10^{9}	
annual saving-kw			1.93×10^{5}	
annual savings-kwh			5.790×10^{8}	
annual savings- $ @.10$/kwh			5.790×10^{7}	

FIGURE 14. NATIONAL SAVINGS POTENTIAL

It is estimated that the average MLWT for wrap around and recessed fixtures is in the range of 50-53°C. Based on this MLWT range, an estimate of the national saving potential is made by comparing the performance of a typical lamp ballast system to thermally efficient system. This comparison is similar to the analysis previously developed for the office layout except national sales profiles are used to estimate the number of systems involved.

It is estimated that 38 million 2 lamp/ballast systems are sold based on annual sales of 23 million fixtures including 2, 3, and 4 lamp wrap around and non-air handling recessed fixtures. The existing fixture market involves a complex mix of different lamp types including a variety of 40 watt and 35 watt lamp types. To simplify this analysis it is assumed that 50% of the market are 40 watt lamps and 50% are 35 watt lamps. Figure 14 shows a performance comparison between the thermal operating conditions for both systems. The thermally efficient system is operating at near optimum in terms of light output and efficacy (MLWT=35-40°C). Within the average fixture, it is estimated that the performance of both lamp/ballast combinations are reduced on the average by 15% in terms of light output and 7% in efficacy due to elevated lamp wall temperatures (MLWT=50-53°C). The number of lumens required is an estimate of the national usage or demand for light, based on existing number of systems sold and the lumen output of the lamp inside the average fixture. The number of systems required using thermally efficient fixtures is determined by using the estimated existing lumens required and the lumen output of the lamp/ballast operating under optimum thermal conditions. The reduction in systems reflects the higher lumen output of the lamp/ballast systems operating under optimum thermal conditions.

Total power for each is the product of the number of systems and the respective power for each system. The annual savings of 5.790×10^{8} kwh is determined using the differential between the two fixtures based on 3000 hours of annual operation. At .10 cents a kwh this energy saving has an annual value of approximately 60 million dollars.

DISCUSSION

From the previous analysis and sample layout it is apparent that significant energy and material conservation potential exists as a function of improving the inherent thermal operating characteristics of fluorescent fixtures. These potentials can be realized with the application of existing technologies such as air handling fixtures. One of the principal factors limiting the application of air handling fixtures is their relative cost compared to standard fixtures. Typically, air handling fixtures involve a relative long payback period when comparing energy benefits and increased fixture costs. However, the air flow fixture has the potential to be constructed at significantly lower costs with simplified air flow geometries and related hardware.

Conventional fixtures also present opportunities for increased thermal efficiency by appropriately designing the envelope of the fixture to reduce elevated compartment temperatures. This approach is well suited to both surface mounted fixtures and lay in troffers. With lay in troffers thermal efficiency can be improved by promoting natural venting to the plenum. This should not represent a significant additional cost in manufacturing and could significantly increase fixture efficiency with reduced lamp wall temperatures.

The principle barriers associated with development of thermally efficient fixtures have been the lack of information documenting thermal losses that occur and the corresponding lack of effort to improve fixture efficiency by reducing lamp wall temperatures. Fixture manufactures need to understand and document explicitly, these temperature based variations that occur due to geometry and construction of the fixture. Based on this understanding, fixture manufacturers should document both the performance improvements and the potential for energy conservation associated with thermally efficient fixtures. Market place pressures should encourage the development of thermally efficient fixtures given the commercial advantage associated with the resulting increase in fixture efficiency.

CONCLUSION

Optimizing the thermal operating characteristics of fluorescent lamp/ballast systems presents a significant opportunity for energy conservation. For this conservation potential to be realized there must be a concerted effort within the fixture design process to understand and account for the temperature based parameters that affect lamp ballast performance.

ACKNOWLEDGEMENT

This work was supported by the Assistant Secretary for Conservation and Renewable Energy, Office of Buildings and Community Systems, Building Equipment Division of the U.S. Department of Energy under Contract No. DE-ACO3-76SFOOO98.

REFERENCES

[1] Jerome, C., "Effect of Bulb Wall Temperature on Fluorescent Lamp Parameters" Illuminating Engineering., Vol.2 No. 2, Feb. 1956.

[2] Siminovitch, M., et. al. "Determining Lamp Ballast Performance with a Temperature Controlled Integrating Chamber" Journal of the Illuminating Engineering Society Vol. 14, No.1 October 1984

[3] Levin,I., et. al. "Performance characteristics of Fluorescent lamp ballast combinations" Journal of the IES, Vol 13 No.1 1983.

[4] Siminovitch, M., et. al. "The Effects of Fixture Type and HVAC Integration on Fluorescent Lamp/Ballast Performance" Published in the IEEE Transactions on Industry Applications Vol. 24, No. 3 June 1988

[5] Dobras, Q.D., M., et. al. "Comparative Performance of Four Foot Fluorescent Systems" Proceedings of the Annual IES Conference ,Detroit, MI. 1985

[6] Clarke, T., et. al. U.S. Patent 3,309,565 (March 1967)

[7] Siminovitch, M., et. al. 1986 Maintaining Optimum Fluorescent Lamp Performance Under Elevated Temperature Conditions. Presented at I.E.S. Annual Conference, Boston, MA, August 1986.

[8] Verderber, R ., et. al. "Measurement of Optical Efficiency of Fluorescent Luminaires" Journal of the IES Vol. 17 No. 2, 1988.

[9] Verderber,R ., et. al. "Lighting Retrofit Considerations" Electrical Systems Design Magazine, April, 1989

[10] Electric Lighting Fixtures. Current Industrial Reports. U.S. Department of Commerce Bureau of the Census, 1987.

LAWRENCE BERKELEY LABORATORY
TECHNICAL INFORMATION DEPARTMENT
1 CYCLOTRON ROAD
BERKELEY, CALIFORNIA 94720