LBL-27394
UC-414

Lawrence Berkeley Laboratory
UNIVERSITY OF CALIFORNIA

Engineering Division

LAr Calorimeter for SCC with a Common Vacuum Bulkhead — a Concept to Improve Hermeticity

W.L. Pope and R.D. Watt

November 1989

TWO-WEEK LOAN COPY

This is a Library Circulating Copy which may be borrowed for two weeks.

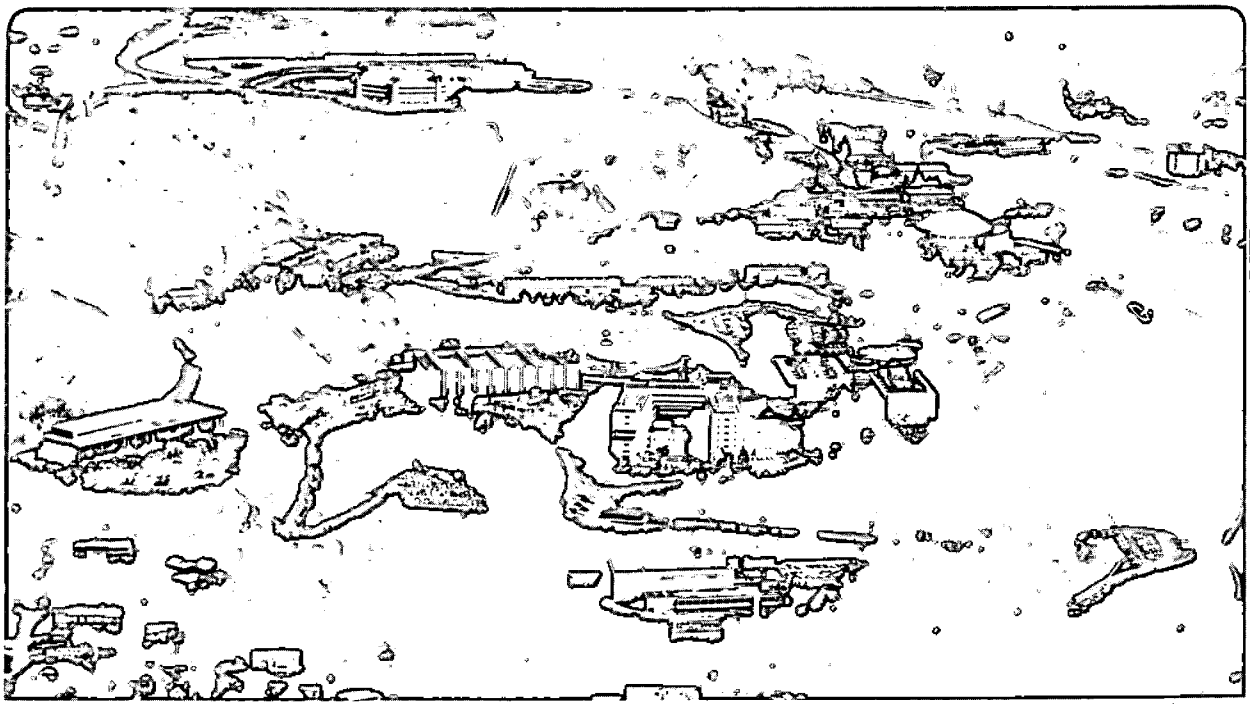

LBL-27394 Copy 2
Bldg. 50 Library.

Prepared for the U.S. Department of Energy under Contract Number DE-AC03-76SF00098.

DISCLAIMER

This document was prepared as an account of work sponsored by the United States Government. While this document is believed to contain correct information, neither the United States Government nor any agency thereof, nor the Regents of the University of California, nor any of their employees, makes any warranty, express or implied, or assumes any legal responsibility for the accuracy, completeness, or usefulness of any information, apparatus, product, or process disclosed, or represents that its use would not infringe privately owned rights. Reference herein to any specific commercial product, process, or service by its trade name, trademark, manufacturer, or otherwise, does not necessarily constitute or imply its endorsement, recommendation, or favoring by the United States Government or any agency thereof, or the Regents of the University of California. The views and opinions of authors expressed herein do not necessarily state or reflect those of the United States Government or any agency thereof or the Regents of the University of California.

LBL-27394

LAr CALORIMETER FOR SSC WITH A COMMON VACUUM BULKHEAD -- A CONCEPT TO IMPROVE HERMETICITY --

William L. Pope
Lawrence Berkeley Laboratory
Berkeley, Calif. 94720
and
Robert D. Watt, Consultant, formerly with
Stanford Linear Accelerator Center
Nov. 10, 1989

I INTRODUCTION

A new concept for a Barrel/Endcap LAr Calorimeter (LAC) is described in which the Barrel and Endcaps are in separate vacuum enclosures but share a common vacuum bulkhead (CVB). We explore 2 possible bulkhead construction types ; 1) welded plate sandwich panels, and 2) brazed sandwich panels in which the core is an *isotropic cellular solid*--foamed aluminum. Gas lines and electric cables from the innermost Drift Chamber pass through radial holes in the core of the sandwich bulkhead.

The CVB concept offers the potential to obtain a more hermetic calorimeter with **significantly** reduced dead material and/or space in the interface region (z = +/- 4 m) common to conventional design LAr detectors for the SSC with Endcap features.

To utilize a common structural wall with these cryogenic vessels, however, means additional steps to remove (replace) the Drift Chamber, a large increase in Endcap *standby* heat leak, and perhaps, new cryogenic safety issues.

We find that significant amount of dead mass (**about 85 %** for the welded bulkhead and **about 75 %** for the brazed foam core panel) can be removed from critical regions of the vacuum shells when compared to a promising SSC LAC reference design. It is also shown that the increased standby heat leak of this concept can be easily removed by existing cooling capacity in another large LAr calorimeter. It is further shown that shut-downs (to access the Drift Chamber, for example) need not be *appreciably* longer.

Finally, it is argued that cryogen spill hazards can be avoided if the Endcap's LAr is removed during Drift Chamber maintenance shutdowns, and that cryogenic safety is **not compromised**.

Thus the Common Vacuum Bulkhead concept may offer a quite attractive set of potential trade-offs for proposed LAr Detector designs for the SSC.

II REFERENCE DETECTOR DESCRIPTION

The symmetric, Barrel/Endcap LAr Calorimeter configuration currently under study (Ref. 1) by Martin Marietta Corporation was selected as a Reference Design to illustrate the Common Vacuum Bulkhead concept. **Figure 1** shows a vertical section through the Reference Design which includes a central Barrel Calorimeter, Endcaps, and an interior region which would be occupied by a Drift Chamber. Outside the Barrel and Endcaps is a large superconducting solenoid (which we can ignore here) surrounded by an iron flux return.

In the z = 4 m region the 2 (innermost) Aluminum flat plates (roughly 5.3 cm thick & 10.2 cm thick, Ref. 1) serve as outer head walls of the vacuum vessels for the Barrel and Endcap respectively. The 5.3 cm space between the 2 vacuum heads provides an utilities egress region for the Drift Chamber.

The use of independent vacuum enclosures for the Barrel and Endcaps (or Endplugs) offers a common (Ref. 2) and convenient means to access the Drift Chamber in very large LAr Detectors. However, the large amount of dead space and/or material between the active calorimeter masses due to 4 relatively thick walls (common to large LAr Calorimeters) is an item of serious concern to physicists. It has been proposed that "massless gaps" can be used to make calorimetry "corrections" in dead regions. The Common Vacuum Bulkhead concept *does not preclude* that option--we simply prefer to reduce the severity of the dead mass problem first.

III THE REFERENCE DETECTOR WITH A COMMON VACUUM BULKHEAD

Figure 2a is a sketch of a vertical section through the Reference Detector modified with a Common Vacuum Bulkhead (CVB). Also shown is a slightly modified support arrangement (See comment emphasized below) for the LAr Vessel of the Barrel Calorimeter which will be described more completely in **Section VI**. In addition, the Endcap's Inner Vacuum Cone in the Reference Design is replaced with a 35 cm radius Cylinder (Ref. 3). The CVB concept can be applied with either a cone or a cylinder here--the choice dictated

primarily by Endcap vacuum seal type and location options which are influenced somewhat by internal and external Endcap support selections.

Although there are several possible inner and outer vessel support arrangements for the Endcap, and perhaps a number of other places to separate its vacuum shell (to access the Drift Chamber), we will use a specific set of assumptions here simply to illustrate the CVB concept along with its take-apart and cryogenic ramifications.

These assumptions--taken as Givens or Non-Issue items *in the interest of brevity* --consist of : (See **Figure 2a**)

(1) The Endcap's LAr vessel is supported to its vacuum vessel similar to the D-Zero Central Calorimeter (Ref. 4),

(2) a system of rails (integrated with the Barrel's Outer Vacuum Shell extension @ $z > 4$ m) are provided to support and withdraw the Endcap,

(3) no utilities lines or electrical cables from the LAr vessel of the Endcap(s) penetrate the Endcap's :

a. Inner Vacuum Cylinder (or previous cone),

b. forward inner Annular Vacuum Plate,

(4) the Endcap is equipped with a suitable Vapor Barrier,

(5) LAr will be removed from the Endcap prior to spoiling its vacuum,

(6) cryogenic fluid and other utilities lines for the Endcap are readily detachable (to allow Endcap withdrawal) or are equipped with suitably flexible rotary bayonets (Ref. 4)

Another **option** for Endcap support is to cantilever it off the Door as shown in **Figure 2b**, with no rail supports needed. This also allows the possibility of cantilevering the Endcap's LAr vessel from the Endcap's aft vacuum head (with adjustable struts), which minimizes Vapor Barrier penetrations, and was found to be quite practical (Ref. 5) for the Endplug of the SLD at SLAC.

If this Endcap support configuration is considered, technician access through the flux return Door must exist to get to the bolted

vacuum connection at D (unless it can be remotely actuated), because the Door is withdrawn with the Endcap.

It is emphasized that the Common Vacuum Bulkhead concept can be employed in the Reference Design without changing the steel cylinder LAr Barrel support shown in **Figure 1** (excepting the Barrel's LAr vessel support strut *angle*) if this Barrel support arrangement is found to have important module loading and assembly advantages.

Vapor Barrier Description

Figure 3 is a schematic of a **Generic Cryostat** with all its "conventional" sub-systems. This particular cryostat, however, is equipped with a *vapor barrier* which, in typical applications, completely surrounds the cold insulated vessel, and at appropriate locations, affects a vapor seal to all vacuum annulus "penetrations". The vapor barrier is thin and radiation hard, and, in many conventional applications, is loose and flexible. In such cases, this vapor barrier could perhaps be made of a laminated assembly of Kapton and Aluminum foil (Ref. 6).

The vapor barrier need not completely surround the inner vessel and need not be "flexible", however, and we will later describe how a thin Aluminum sheet vapor barrier (welded to appropriate regions of the Endcap's vacuum shell) can be used to our advantage.

The purpose of the vapor barrier in the CVB concept is to allow opening and removing part of the Endcap's vacuum shell (while the inner vessel is cold but filled with Ar gas), and to keep the MLI clean and dry for extended periods while attending to other Calorimeter systems--i.e. Drift Chamber maintenance operations.

Prior to Endcap withdrawel, it's vacuum annulus space (the inner and outer vapor barrier regions) are simultaneously brought up to a very small (<< 1" H2O) positive pressure with Ar(g). With the MLI space at atmospheric pressure, the Endcap's standby heat leak will be much higher. We will look at this later.

IV DRIFT CHAMBER ACCESS

To get to the Drift Chamber, we need to separate the Endcap's vacuum shell. The operational steps for the **Figure 2a** support configuration are as follows (*this* proceedure assumes conventional bolted flanges and high vacuum seals at A, B & D--where seal A is in a high radiation region, seal B is in a "moderate" radiation region, and seal D sees low radiation. We will *later* describe how the normally *high* vacuum requirement of seals at A & B can be eliminated

with a modified Vapor Barrier arrangement and a remotely actuated flange connection at joint B(**Figure 2a, 2b**)):

1. withdraw the flux return Door

2. pump the Endcap's LAr to storage, valve off the vacuum pump, and valve down the Endcap's Ar vessel to local relief valve pressure (say 5 psig)

3. fill the Endcap vacuum enclosure with Ar(g) at 1 atmosphere,

4. (a) remove the Endcap's inner vacuum cylinder bolts, A

   (b) remove the Endcap's outer vacuum shell bolts, D

5. disconnect (as applicable) the cryogenic utilities lines, and withdraw the Endcap LAr vessel

6. remove the Endcap's forward vacuum plate bolts, B, and remove the plate/inner vacuum cylinder assembly

-------- Access to the Drift Chamber end exists ---------

7. if necessary, disconnect cables, utilities, etc. and remove the Drift Chamber

8. move the Endcap LAr vessel (as required) to reconnect cryogenic utilities lines. Commence Endcap re-cooling.

Re-assembly would follow in reverse order, and will take more time (as in any complex system to be closed for a year). To reconnect the Endcap's Outer Vacuum Shell joint at D (see **Figure 2a or 2b**), we suggest that tapered guide pins would be provided on the Barrel side of the joint to obtain initial x, y, and rotational allignment. If flange parallelism needs to be re-established (**normally not necessary** with a repeatable Endcap withdrawal means), the vacuum load carrying array of screws (or nuts), Feature E, could be adjusted.

Drift Chamber Access Time

Very rough estimates of the time required to access the Drift Chamber for maintenance are shown in **Table 1**. Drift Chamber

removal is not considered, because we have no way to estimate the time to locally disconnect the many thousands of signal channel cables.

It should also be recognized that *it will be necessary to provide local Drift Chamber cable disconnects at at least one end of the unit* to remove it from the opposite end--for even the Reference Design configuration.

The relative time to **replace** the Endcap for a CVB LAC and a "conventional" LAC is about the same as the **Table 1** values, except that we would have to add time for Endcap vacuum acquisition--perhaps 2 to 4 hours-- short because we have not exposed the previously pre-conditioned MLI to air and water vapor.

From the forgoing we conclude that the additional time to access the Drift Chamber, though a small operational *inconvenience*, is not a serious impediment to consider the Common Vacuum Bulkhead concept.

If the **Figure 2b** Endcap support option is chosen, Step 1 (above) moves to and becomes part of Steps 5 and 8. Drift Chamber access time could be somewhat longer, because the technicians would be working under more confined conditions, unless a remotely actuated flange connection at joint D is provided.

V STANDBY HEAT LEAK AND REFRIGERATION

With the Endcap removed while it's LAr vessel is only "insulated" by Ar gas shorted MLI (in a vapor barrier at 1 atmosphere), it's standby heat leak will be very much higher. We need to know the magnitude of this standby heat leak to determine whether or not adequate cryogenic cooling capacity exists.

The results of such calculations are contained in **Appendix A**, where it is shown that the Endcap's overall standby heat leak will go up by about a factor of 10 to perhaps 15 even though the MLI heat leak will increase by about 100 times (depending upon a number of MLI design choices).

In addition, we conclude that there will be more than enough existing cooling capacity (using information from Mulholland, Ref. 7, 8) to maintain the Endcap arbitrarily close to 90 K indefinitely for subsequent refilling with LAr. If not, added standby refrigeration capacity is relatively easy to provide.

Consequently, we do not believe that the Endcap's high *standby heat leak* is an important issue when considering the CVB concept.

VI DEAD MASS REDUCTION WITH A COMMON VACUUM BULKHEAD

a) welded, non-isotropic sandwich panel CVB

In this section we describe some of the structural characteristics and the potential relative mass of an 5083 Aluminum alloy flat bulkhead of welded sandwich construction which could replace the 15.5 cm of Aluminum (2 vacuum heads) in the Reference Design.

In **Section VI, b)** we describe potential mass reductions using brazed sandwich panels with isotropic foamed aluminum cores.

Our investigations were quite limited in scope, tailored to get to the meat of the vacuum shell's dead mass at z = +/- 4 m without modeling the entire Calorimeter structure.

In order to minimize the mass of the flat bulkhead (See **Figure 2a or 2b**), we first conceptualize a support scheme for the Barrel's LAr vessel which to first order, doesn't need the end vacuum bulkheads for the major gravity load (active mass) support function or to resist earth-quake accelerations in any direction. This support scheme should also allow cool-down of the LAr vessel with a minimum of load variation from it's initial pre-loaded condition.

A commonly accepted means to accomplish this is with a rotationally symmetric array of Struts equipped with spherical rod-ends with opposite hand threads to allow the high thermal impedance central member (usually a low thermal conductivity tube) to also function as a turnbuckle. Such Struts can simplify assembly allignment operations, have been common on flight cryostats, and are used to support the Endplug LAr vessels on the SLD at SLAC. The appropriate number of Struts depends upon the supported mass and the stiffness of the shells to which they're attached.

To minimize Strut load variation (and Strut and vessel attachment stresses) during cool-down, they must be attached to the shells with the strut axes nominally perpendicular to a line through the clevis on the Barrel's LAr vessel and the center of the Barrel (See **Figure 2b**)--the exact angle depending upon the desired load variation during cool-down.

One Common Vacuum Bulkhead Design Concept

Appendix B contains a description of the steps performed to arrive at a first-cut estimate of a CVB design which could replace the 2 thick Aluminum Vacuum Heads in the Reference Design. Also

included are the details and results of FEA using the ANSYS Code (Ref. 9).

The welded sandwich panel CVB design is based upon a total sandwich thickness of 8.0 inches, so the relative z-positions of the active calorimeter masses are the same as in the Reference Design.

Figure 4 is a sketch of our first-cut CVB design. This relativly simple, 3300 lb welded sandwich structure would be stressed to less than about **5.4** ksi during normal operation and standby (one side up to air), to *about* **10** ksi if one LAr vessel ruptures with the other intact (See Structural Simulation, **Appendix B, 1)**), and has about **15 %** of the mass of the 2 flat vacuum heads of the Martin Marietta Reference Design in the region between ro = 335.3 cm (132 inch) and ri = 167.6 cm (66.0 inch).

Part of the 85 % mass reduction with the CVB design is achieved through the use of an inherently more mass efficient bulkhead construction type (the required space was there to exploit), and *part* because some of the Endcap's vacuum load is now ***shared*** by another efficient *existing* member--the Barrel's Inner Vacuum Shell--effectively *reducing* the Endcap Vacuum Head's radial span.

It should also be noted that to achieve the CVB's inner radial edge (simple) support condition, with only the small outer/inner edge relative displacement due to Barrel Vacuum Cylinder net compliance (**Appendix B**), the Endcap's aft vacuum head and outer cylinder must be made stiffer (i.e. thicker) than in the Reference Design, but this is easily done and no Physics penalties are involved.

The thickness of the Barrel's Inner Vacuum Shell ***might*** increase *slightly* because of the physical connection between the Endcap and the Barrel with a CVB, *but this depends upon a multitude of LAC design considerations which include, but are not restricted to*, the maximum anticipated transient pressure rise in the Endcap's vacuum annulus as a result of an Endcap LAr Vessel rupture.

For this study we've assumed this transient (positive) pressure rise to be no more than 12 psig (as in the Reference Design)--there is no logical reason to attempt to "contain", (without venting to storage, liquid dump, or external surroundings) higher pressure spikes.

For the Endcap's forward Inner Annular Vacuum Plate (ro = 160 cm, ri = 35.4 cm), a simple 1 3/4 inch thick solid Aluminum plate could replace the 4 inch thick head of the Reference Design (for a 56 % reduction of mass), or another, lighter gauge, sandwich panel could be used here to **easily** reduce the local mass by about 90 %.

The forgoing head mass reductions are accomplished using the **same** materials, the **same** loading, the **same** allowable stresses,

and the **same** failure criteria as those adopted to date for the Martin Marietta Reference Design--by incorporating a suitable CVB.

The welded plate sandwich CVB obviously has some attractive features for an improved LAC. It has, however, one potentially important experimental drawback--the circumferential and radial panel web plates represent localized concentrated masses which could significantly complicate the analysis and/or reconstruction of events. In the next section we describe another CVB panel construction type which avoids this problem.

b) brazed, foam core, isotropic sandwich panel CVB

Another way to achieve a low mass bulkhead is through the use of a sandwich panel with a thick, low density, isotropic core and thin, relatively higher strength face sheets. This construction type has been common to the aircraft industry since the early 1940's, and has found many other useful industrial applications. Honeycomb panels are a well known example of a structurally efficent, *near isotropic*, flat bulkhead.

A relatively recent core material development (about 1965), however, are ***foamed metals.*** Metals, glasses, and ceramics (like many plastics) are now commercially produced as low density cellular solids--not to be confused with the *much denser sintered metals and ceramics used in filtering applications and made using powder metallurgical methods.* The foamed metals have a variety of very useful structural and thermal properties. These materials can be sawed, milled, drilled, brazed, and welded, and have quite *predictable* mechanical (and thermal) properties.

Ashby (Ref. 10) was perhaps the first to successfully correlate the mechanical properties of broad groups of these *cellular solids.* Gibson & Ashby (Ref. 11) have recently published a very comprehensive book on these ***very important*** new materials, and provide one of the most thorough analyses to date of minimum weight sandwich beams--which included carefully executed testing and failure mode verification.

We have used the foamed metal property correlations from Gibson and Ashby, and have slightly modified their sandwich beam design equations to obtain a useful design code, RFOBM (Ref. 12), for minimum weight foamed metal core (and other *isotropic materials*) sandwich beams subjected to arbitrary face sheet bending (or wrinkling) and core shear stress constraints. The RFOBM design results agree quite well with (limited) detailed finite element analysis using the ANSYS Code.

Using RFOBM (see **Appendix B, 2**) and the geometry, loading and boundary conditions of the previously described welded panel design, we have computed the minimum relative mass and overall thickness of foamed metal core CVB's constructed of 6101-T6 Aluminum alloy (both the core and the brazed-on face sheets). This alloy was selected for this analysis simply because it is produced by a local vendor (along with foamed Copper and Titanium) who supplied samples, property data and fabrication information.

Figure 5 shows the results of the RFOBM calculations on the foamed core Aluminum sandwich panels used as CVB's on the Reference Design. This plot applies for the previously described (welded panel CVB--**Section VI, a)**) loading, geometry, and boundary conditions, and for 28,000 psi face sheet yield strength panels stressed to 10,000 psi maximum (face sheet axial stress Margin-of-Safety of 1.80) when subjected to a distributed lateral pressure of 27.0 psi (See **Appendix B** for the basis of the 27.0 psi lateral pressure for the Reference Design LAC if it were to be implimented with CVB's).

From **Figure 5** we see that if we maintain the same relative z-location of the Barrel and Endcap active masses as in the Martin Marietta Reference Design (H/Hmm =1.0, where Hmm = 8.0 inches--the distance between the *inside* of the Barrel's vacuum head and the *inside* of the Endcap's vacuum head), the relative mass of the isotropic CVB (loaded at 27 psi) is **about 25 %** of the Reference Design's 2 thick 5083 Aluminum vacuum heads (loaded at 15 psi), and the CVB core's maximum shear stress would be about 1/3 of the foamed Aluminum core's shear yield strength--$(MS)_{CS}$ = 2.0.

For these conditions, the minimum weight 6101-T6 foamed core panel would have a core density of *about* 0.015 lb/in^3, and, according to Ashby's correlations, an Elastic Modulus of *about* 222 ksi, and a shear yield strength of *about* 483 psi. This core density (as are all others implied in **Figure 5**) is well within the range of densities produced by the local vendor (and perhaps others), and the assumed properties agree closely with his own limited measured property data.

The hermeticity of the calorimeter not only depends on the amount of dead mass, but also on the gaps between active masses, so if, on the other hand, we chose to bring the active calorimeter masses closer--to say, H/Hmm of 0.9, the relative CVB mass would increase to only about 27.5 %, and a higher core shear Margin-of-Safety would be required--about 2.7, obtained through the use of a higher density foam core. More details of this analysis are contained in **Appendix B, 2**.

From **Figure 5** we see that there are some *very interesting hermeticity trade-offs* with the isotropic, foamed core CVB (which should be conducted by the detector system integrater) which we feel will lead to some **rather compelling Physics reasons** to seriously consider the Common Vacuum Bulkhead concept for an SSC LAC.

Figure 6 is a very simplified conceptual sketch of one possible configuration of a CVB constructed with a foamed Aluminum core. In this design we have increased the facing sheet thickness near the outer radius (where the bending moment would be high, but mass is not critical because interactions would be "outside" the endcap) to achieve a low overall mass sandwich panel with a more structurally efficient outer edge. We also switched to 5083 for the face sheets to increase CVB attachment reliability (but may make the brazing more difficult), and we show thin Aluminum tube "liners" for the Drift Chamber utilities ducts (which were not considered in the core shear evaluation above, but will be looked at later with ANSYS--this is *not* a problem-- see **Appendix B, 2**).

VII BASELINE CONCEPTUAL DESIGN CVB

We're now in a position to describe potentially achievable design *goals* for a Barrel/Endcap LAC for SSC utilizing a CVB.

First of all, to be seriously considered, the Baseline CVB LAC conceptual design should achieve significant dead mass and/or active mass gap reductions at z = +/- 4 m to offer real Physics advantages over all competing LAC design alternatives. Secondly, but of utmost importance, the CVB design should not compromize safety to experimentors or operations & maintenance personnel, or the SSC facility itself.

In addition, the CVB design should be isotropic to simplify event analysis and/or track reconstruction, and it should be radiation hard even in removable joint seal areas where it is all to easy to overlook a subtle compromize. Finally, the design should permit easy access to the Drift Chamber and not be prohibitively expensive--engineering development items must be minimized.

A conceptual CVB configuration which we feel can meet all these goals is shown in **Figures 7 & 7a**. This design utilizes a thin, 5000 series, stability critical, Aluminum sheet Vapor Barrier *(roughly* 1/16 inch thick), which is welded vacuum tight to the Endcap's 5083 Aluminum vacuum shell with a small, external "Purge Gap" which, in normal operation, is continually pumped with a suitable mechanical system.

The external Purge Gap, **Figure 7a**, is also relatively small--say the order of 1/4 to 3/8 inch--to insure that the Vapor Barrier stretches *elastically* with the application of the Purge Vacuum, and is fully supported in the event of a rupture in the Endcap's LAr vessel. The Purge Gap region and the Endcap's main insulating vacuum are suitably connected pneumatically, and electrically interlocked such that, through all planned start-up, operation, and shut-down proceedures, and during any *unplanned* power interupts, the thin sheet Vapor Barrier *never sees a significant external pressure differential.*

In addition, in the standby mode, when the Vapor Barrier is not "supported" externally, the design must be such that there is *no chance of applying a potentially damaging internal pressure differential.*

This LAC Conceptual Design also utilizes an isotropic, foamed Aluminum core, CVB with brazed-on 5083 Aluminum face sheets so that it's flanges are readily weldable to the Barrel's 5083 Inner Vacuum Cylinder (a bolted joint with a thin sheet cover weld) and to the rigid cylindrical box section which is part of the Inner Vacuum Shell Extension of the Barrel (see, for example, **Figures 6 & 7**).

Next, at z = +/- 4 m, between the Endcap Vacuum Shell inner radius and the Barrel Inner Vacuum Cylinder radius, there exists another *very low* mass, isotropic, foamed Aluminum core sandwich panel, which is similarly designed, but for 15 psi operation (it is NOT a CVB), and takes advantage of *load sharing* (**Section VI, a**).

At the junction between these two sandwich panels, a disconnectable joint exists, with an efficient axial load path to the Inner Vacuum Cylinder of the Barrel.

This design has only 2 "frequently opened" joints (for Drift Chamber access) with circumferential seals at the interface between the removable Endcap and the Barrel with it's welded-on CVB, and ***neither** of these room temperature seals need to be high vacuum tight.*

For the seal at Joint A (**Figure 7**), which is exposed to a relatively high annual radiation dose (the order of 10^3 Gy at SSC design luminosity, Ref. 13) we could, perhaps, use an internal coil spring energized, all metal gasket of commercial design and never have to worry about radiation damage, or use one of a variety of, more compliant, high radiation resistant plastics, and replace it at about 1 year intervals (Ref. 14) and still be quite safe.

For the seal at Joint B, which sees a low annual radiation dose (less than about 100 Gy), we could, perhaps, safely use a conventional, highly reliable, rubber O-ring.

All other Endcap and Barrel Vacuum Shell joints would be seal-welded shut--as has been described for the Reference Design--frequent access to the internals of these vessels is not anticipated.

To the careful reader, it should be clear that the Baseline Conceptual Design CVB equipped LAC just described requires at least one *remotely operable* vessel "disconnect" (at Joint A, which is inaccessable). This joint must open and close reliably, carry the Endcap's Inner Vacuum Panel vacuum load outer reaction, and incorporate the inner radius Purge Gap seal (not high vacuum) previously described.

We have only a "Buck Rogers quality" design for this joint at this time, so we'll defer it's description until after we've picked the fertile mechanical brains of others who might approach the problem with less bias.

VIII SAFETY

It is clear that the use of a Common Vacuum Bulkhead will introduce new safety issues *or concerns* --no one has ever built a large cryogenic vessel like this. It is fully accepted that removal of the Endcap's liquid Argon prior to spoiling the vacuum is essential to eliminate the potential hazard of a LAr spill. Other steps which appear to be logical and prudent are listed in **Figure 8**. Our conclusion here is that appropriate means *can be provided* so that a Common Vacuum Bulkhead LAC can be operated safely.

IX OTHER POTENTIAL ISSUES

An informal discussion of potential issues resulting from the use of a CVB in a large LAC at the SSC site was held at LBL on 6/7/89. **Figure 9** is a list of items briefly discussed at this meeting, including a general consensus with regard to solvability assuming appropriate levels of study and proper design execution.

No single issue was identified which could preclude the use of Common Vacuum Bulkheads in a Liquid Argon Calorimeter for SSC--except, perhaps, time--if such a design were to be implimented on the first LAC for SSC, we have to start talking about it *soon.*

Peter Limon recently asked what level of mass reduction could be achieved if the 2 vessel vacuum heads of the Reference Design

were simply replaced by independent, foamed core aluminum panels--*not* a Common Vacuum Bulkhead.

We find that minimum weight panels could reduce the vacuum head mass by *about* 50 to 60 % (depending upon the assumed core shear margin-of-safety) with *about* a factor of 3 to 4 increase in overall head thickness. This, of course, moves the active masses much farther apart, but, ostensibly, has second-order hermeticity affects. A similar level of mass and space change could be achieved with relatively flat, dished vacuum heads as was done in D-Zero. If vessel dead mass (and not active mass configuration and support complexity, etc.) was the *only* issue, the D-Zero vessel design approach would *perhaps* win in all comparisons.

X SUMMARY AND CONCLUSIONS

This is by no means a thorough study of either alternatives or issues, and no detailed assembly sequence or FMEA was developed. The concept is offered as a first cut solution to local *hermeticity problems common to all large LAr Calorimeters with applicability to the SSC.*

The isotropic, foamed Aluminum core CVB in the Baseline Conceptual Design allows a ***significant*** (approx 75 %) dead mass reduction in the vacuum vessels of the Reference Design at z = +/- 4 m which should improve hermeticity, and thus calorimetry, with no significant cost, schedule, safety, or maintenance impacts--with a negligible Drift Chamber access *inconvenience* penalty.

We do not anticipate a large amount of engineering development because of the use of foamed Aluminum in the core of the sandwich panels--*the technology exists.* However, we will need to identify a vendor of this material who will be able to supply Aluminum foam "blocks" the order of 8 inch x 22 inch x 70 inch long at densities of *about* 0.015 to 0.020 lb/in^3 (which, *if necessary*, could be pre-brazed assemblies of smaller machined blocks with Aluminum foil at the joints), and a furnace large enough to do Aluminum brazing on parts which will be about 265 inches in diameter.

If a conventional LAr cryostat (with 4 flat, or nearly flat, walls) Barrel/Endcap design configuration is "desired" for the Large (or Small/Short) Solenoid Detector for SSC, and vessel dead mass or active mass gaps @ z = +/- 4 m remain as serious hermeticity issues, the CVB concept should be included for comparative hermeticity analysis by the Martin Marietta Corporation.

This note provides sufficient Barrel/Endcap interface region definition to do a hermeticity comparison with the Reference Design now.

XI ACKNOWLEGEMENT

We thank Gerry Abrams, Peter Limon, Robert L. Fulton, H. Paul Hernandez, Richard Wolgast, Bill Edwards, and Ray Fusezy (all from LBL), and Mike Marx (Stony Brook) for their frank critical comments and useful suggestions. Special thanks go to Kent K. Leung (formerly with LBL, now with the SSC CDG) for his timely response of expert structural assistance and ANSYS calculations, and to Yoshy Minamihara (LBL) for his illustrations.

XII REFERENCES

Ref. 1 T. Adams, et. al, "Reference Engineering Design Study for Hermetic Liquid Argon Calorimetry", Brookhaven-Martin Marietta-Stony Brook, presented at SSC Large Mechanical Detector Systems Workshop, Lawrence Berkeley Laboratory, Berkeley, Ca., Apr 20-21,1989.

Ref. 2 G. G. Tower, "Proceedings of The Workshop for the: Comparative Engineering Study of Cryostat Systems for Generic Hermetic Liquid Argon Calorimeters for the SSC", University of Colorado, Boulder Co., Dec 19-20,1988.

Ref. 3 G. S. Abrams, LBL, private communication, June 7, 1989.

Ref. 4 G. T. Mulholland, et. al, "Cryogenic Design of the D-Zero Liquid Argon Collider Calorimeter", Fermi National Accelerator Laboratory, Batavia, Ill, in ADVANCES IN CRYOGENIC ENGINEERING, Vol. 33, 1987.

Ref. 5 R. Bell, SLAC, private communication, June 6, 1989.

Ref. 6 T. M. Flynn, et. al, "External Insulation Systems for Cryogenic Storage Systems", Final Study Report, Colspan, P.O. Box, 3467, Boulder Colo., 5/17/71, prepared for NASA Manned Spacecraft Center, Houston, Texas, R. K. Allgeier, Technical Monitor.

Ref. 7 See Mulholland's handouts in W. Cooper's presentation on D-Zero in Ref. 2 above.

Ref. 8 G. T. Mulholland, FNAL, private communication, June 20, 1989.

Ref. 9 ANSYS, Copyright 1987, Swanson Analysis Systems, Inc. Houston, Penn.

Ref. 10 M. F. Ashby, "The Mechanical Properties of Cellular Solids", The 1983 Institute of Metals Lecture to the Metallurgical Society of AIME, Metallurgical Transactions A, Vol. 14A, Sept. 1983.

Ref. 11 L. J. Gibson & M. F. Ashby, CELLULAR SOLIDS, Structure & Properties, Pergamon Press, 1988.

Ref. 12 W. L. Pope, "Minimum Weight Sandwich Beams & Plates with Arbitrary Stress Constraints", LBL Mech. Eng. Note (TBD), Lawrence Berkeley Laboratory, Berkeley, Ca. (in work 11/89).

Ref. 13 Summary Talks, Workshop on Calorimetry for the Superconducting Super Collider, Tuscaloosa, Ala, Mar 13-17, 1989--See plot from (CDG Study) of "Typical peak Yearly doses....." in R. Hollebeek's 3/14/89 presentation on Warm Liquid Purity Requirements.

Ref. 14 D. Evans & J. T. Morgan, "A Review of the Effects of Ionizing Radiation on Plastic Materials at Low Temperatures", ADVANCES IN CRYOGENIC ENGINEERING, Vol. 28, Materials, 1982.

Ref. 15 LMSC, "Thermal Performance of Multilayer Insulations", Final Report for Contract NAS 3-12025, NASA-CR 72747, 4/20/71, Lockheed Missiles & Space Company, Sunnyvale, Ca.

Ref. 16 W. H. McAdams, HEAT TRANSMISSION, McGraw-Hill Book Company, Inc. 1954.

Ref. 17 ALCOA, ALCOA STRUCTURAL HANDBOOK, A Design Manual for Aluminum, Aluminum Company of America, 1960.

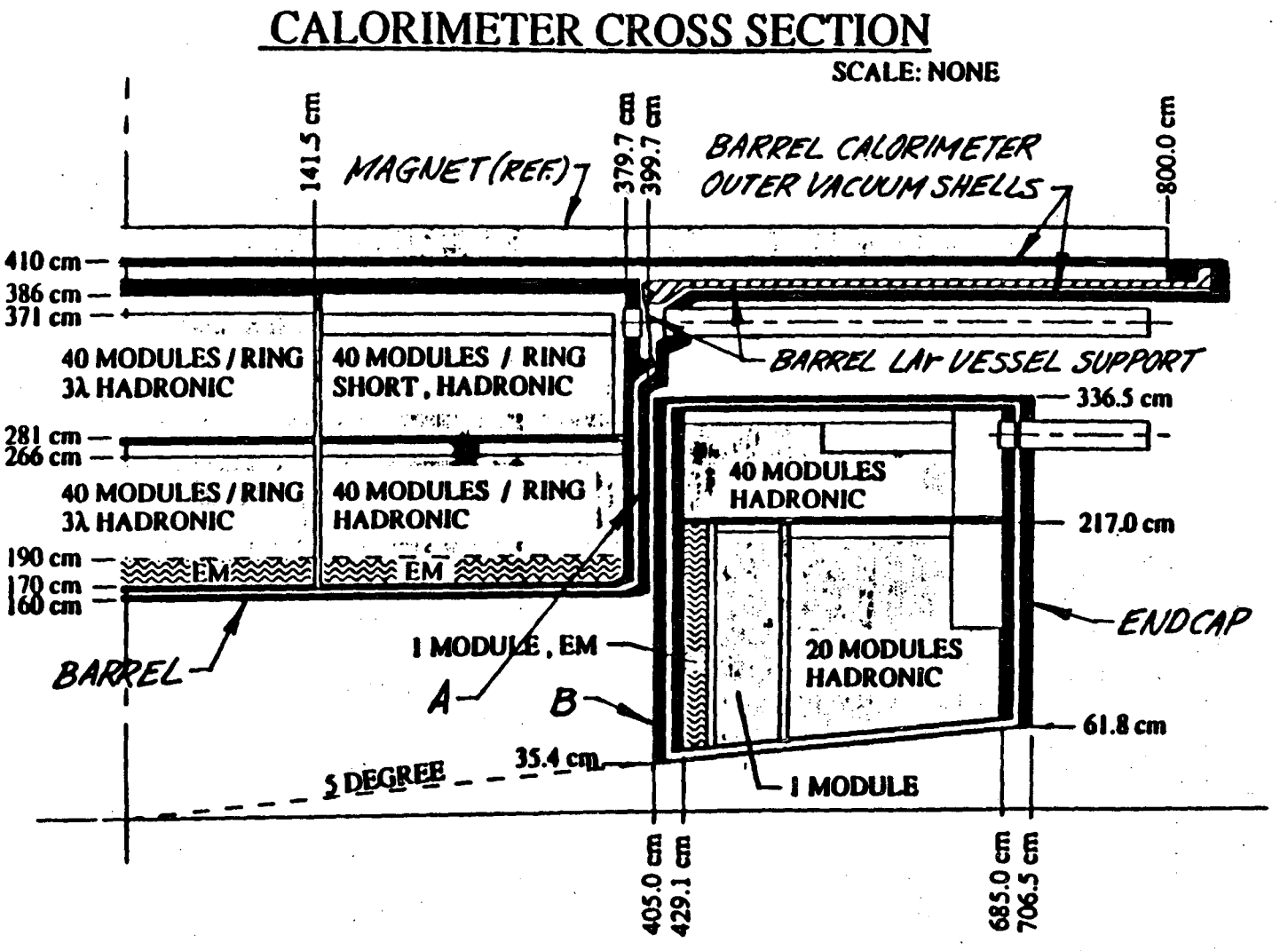

FIGURE 1 THE SYMMETRIC BARREL/ENDCAP LAr CALORIMETER AS DESCRIBED IN REF. 1. THE VACUUM VESSEL HEADS, A & B ARE 2" AND 4" THICK, 5083 ALUMINUM ALLOY PLATES.

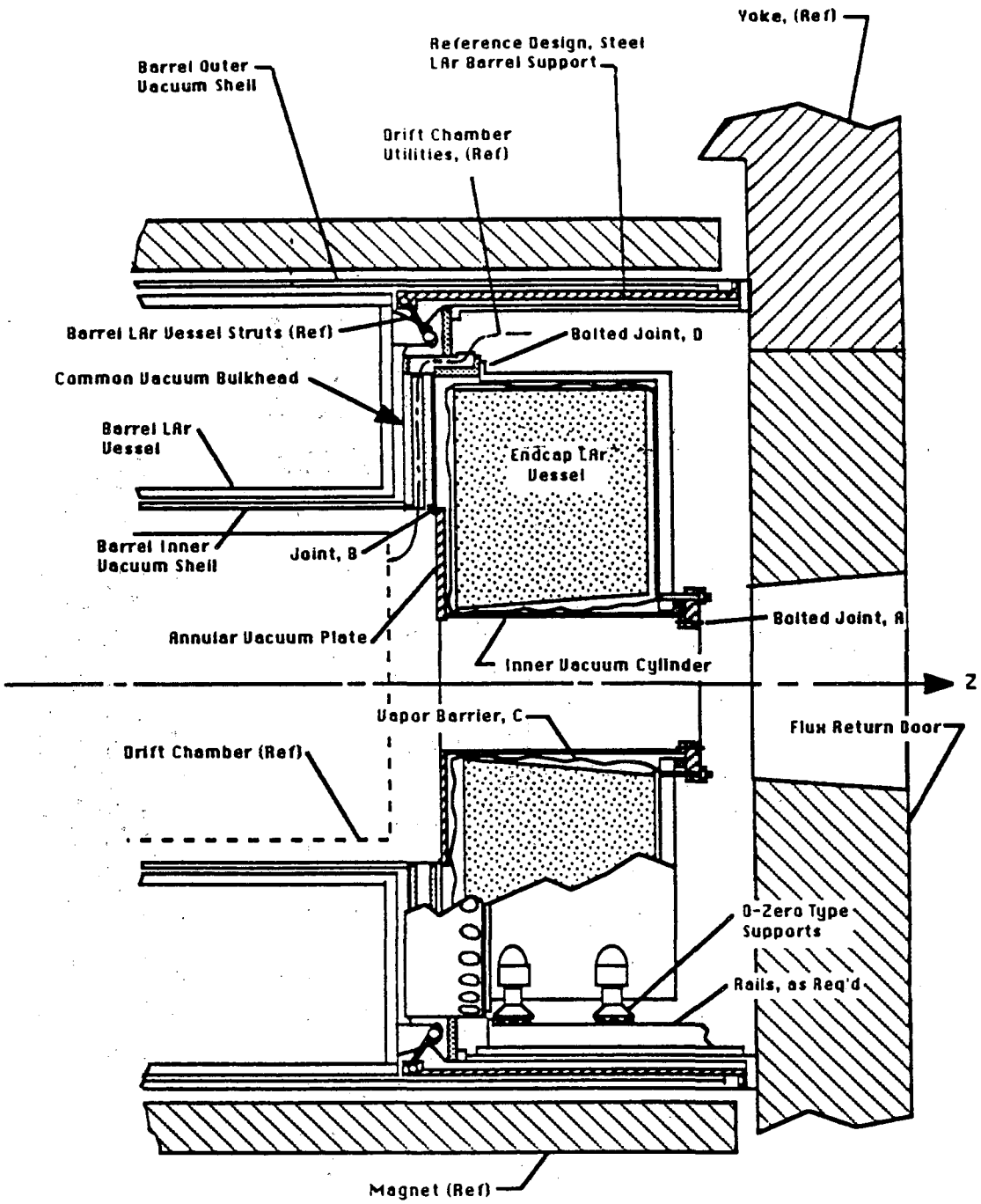

Figure 2a (NOT TO SCALE)
Conceptual Sketch of the Reference Design LAr Calorimeter modified with a Common Vacuum Bulkhead to reduce shell mass in the z = +/- 4 m region between Barrel and Endcaps

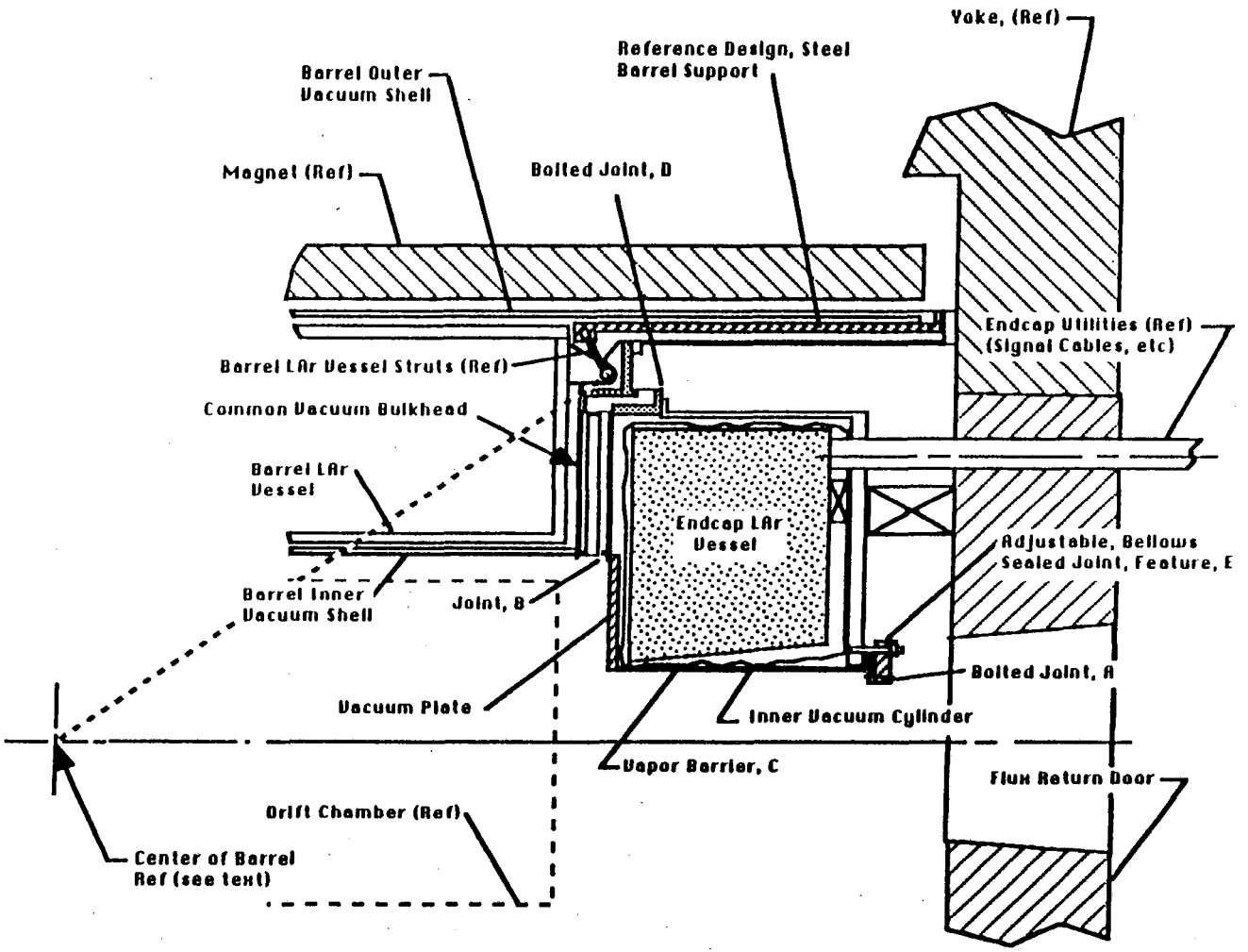

Figure 2b (NOT TO SCALE)
Reference Design LAr Calorimeter modified with a Common Vacuum Bulkhead which assumes the Endcaps are cantilevered off the flux return door

GENERIC LAr CRYOSTAT

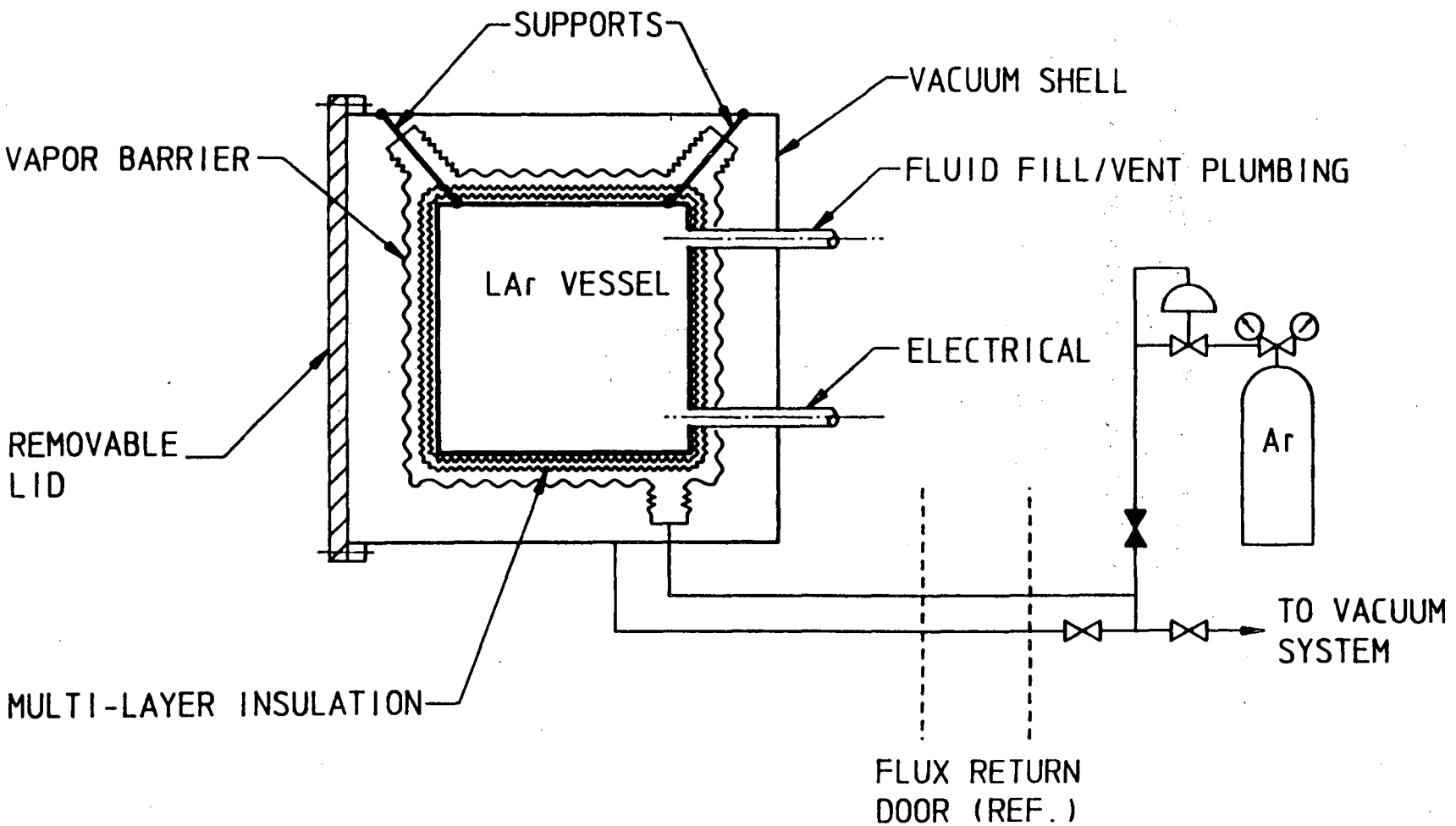

FIGURE 3. VAPOR BARRIER

TABLE 1 ***APPROXIMATE*** **DRIFT CHAMBER ACCESS TIME ESTIMATE -- (hours)**

(See text Section IV for Operation Step descriptions)

Operation Step	CVB LAC (Fig. 2a option)	Conventional LAC
1	1-5	1-5
2	4	0-4
3	1	0
4	1-3	0
5	6-15	6-15
6	2-4	0
7	----	----
8	10-20	10-20
Total Time	25-52	17-44
Relative Time	1.47-1.18	1.0-1.0

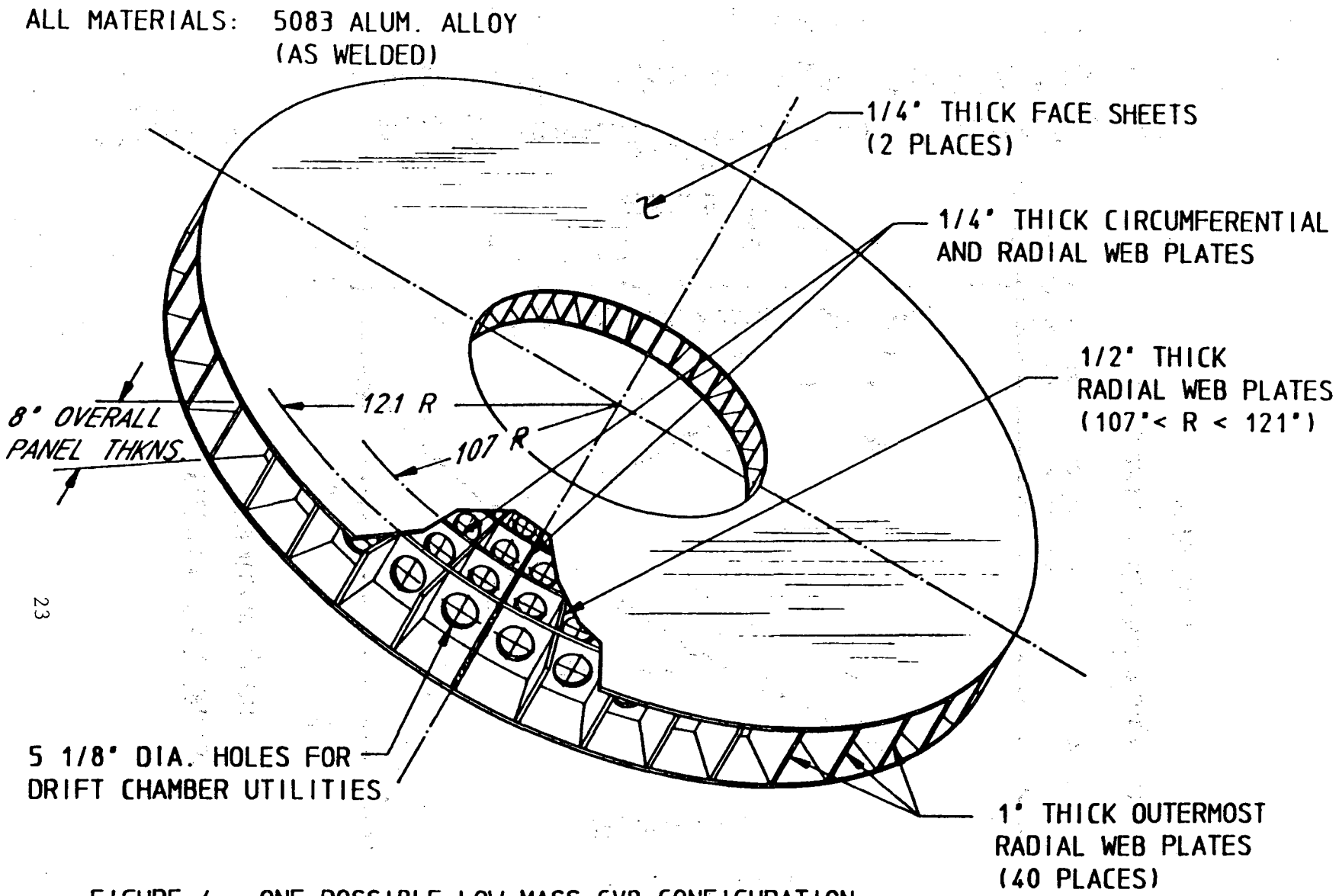

FIGURE 4. ONE POSSIBLE LOW MASS CVB CONFIGURATION
FOR THE MODIFIED REFERENCE CALORIMETER
(CLOSURE WELD DETAILS(200 PANELS) AND INNER RADIUS FLANGES NOT SHOWN)

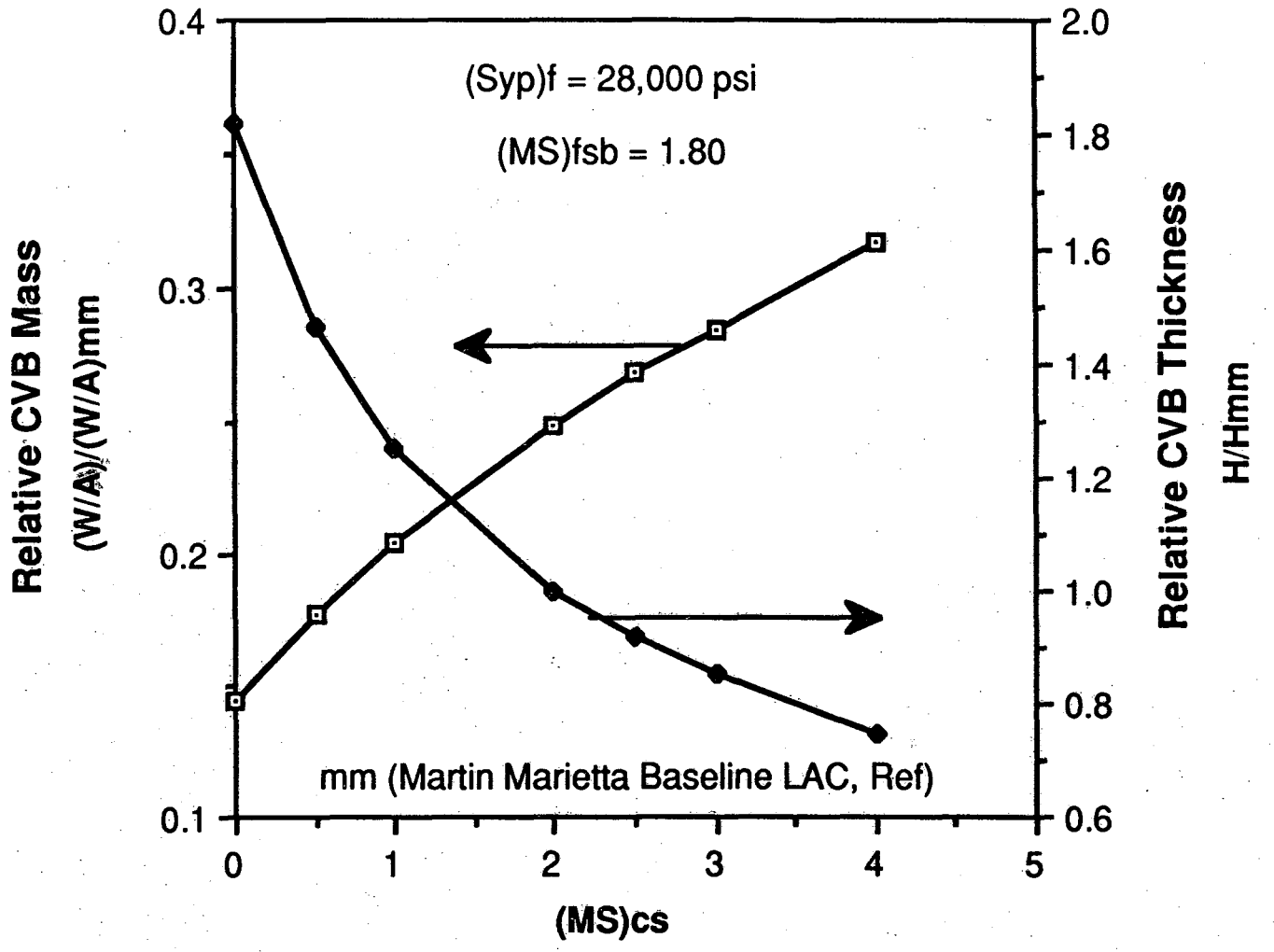

Figure 5 **Mass Reduction Potential with Foamed Alum Core Sandwich Panel as CVB for LSD LAC**

ALL MATERIALS: CORE - FOAMED 6101 ALUMINUM ALLOY(0.015-0.020 LB/IN^3)
FACE SHEETS - 5083 ALUMINUM ALLOY
TUBES - TENTATIVELY, 6063 ALUMINUM ALLOY

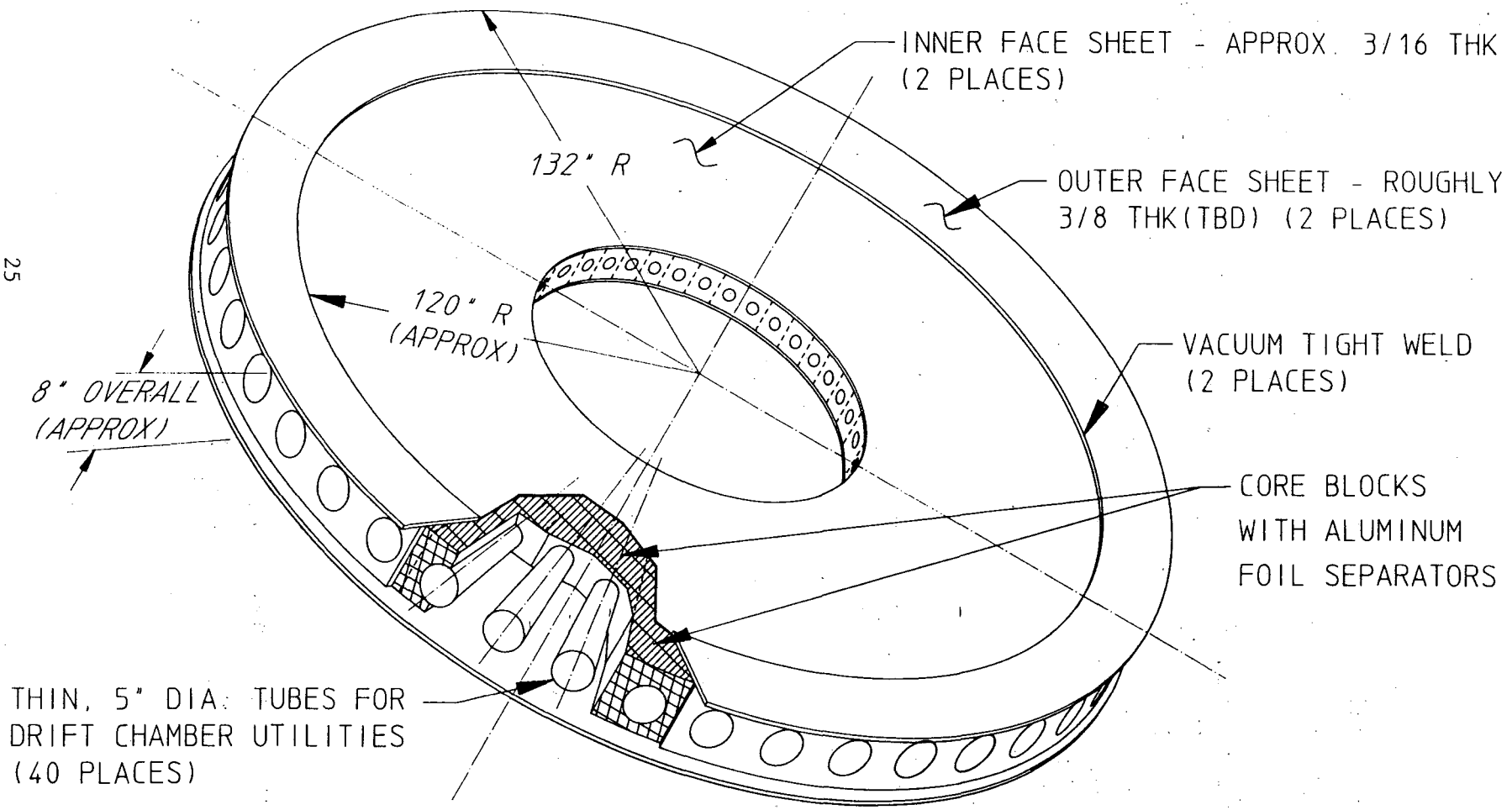

FIGURE 6. CONCEPTUAL SKETCH OF BASELINE DESIGN COMMON VACUUM BULKHEAD WITH THIN 5083 ALUMINUM FACE SHEETS AND FOAMED ALUMINUM CORE (BRAZED CONSTRUCTION; INNER RADIUS DETAILS NOT SHOWN)

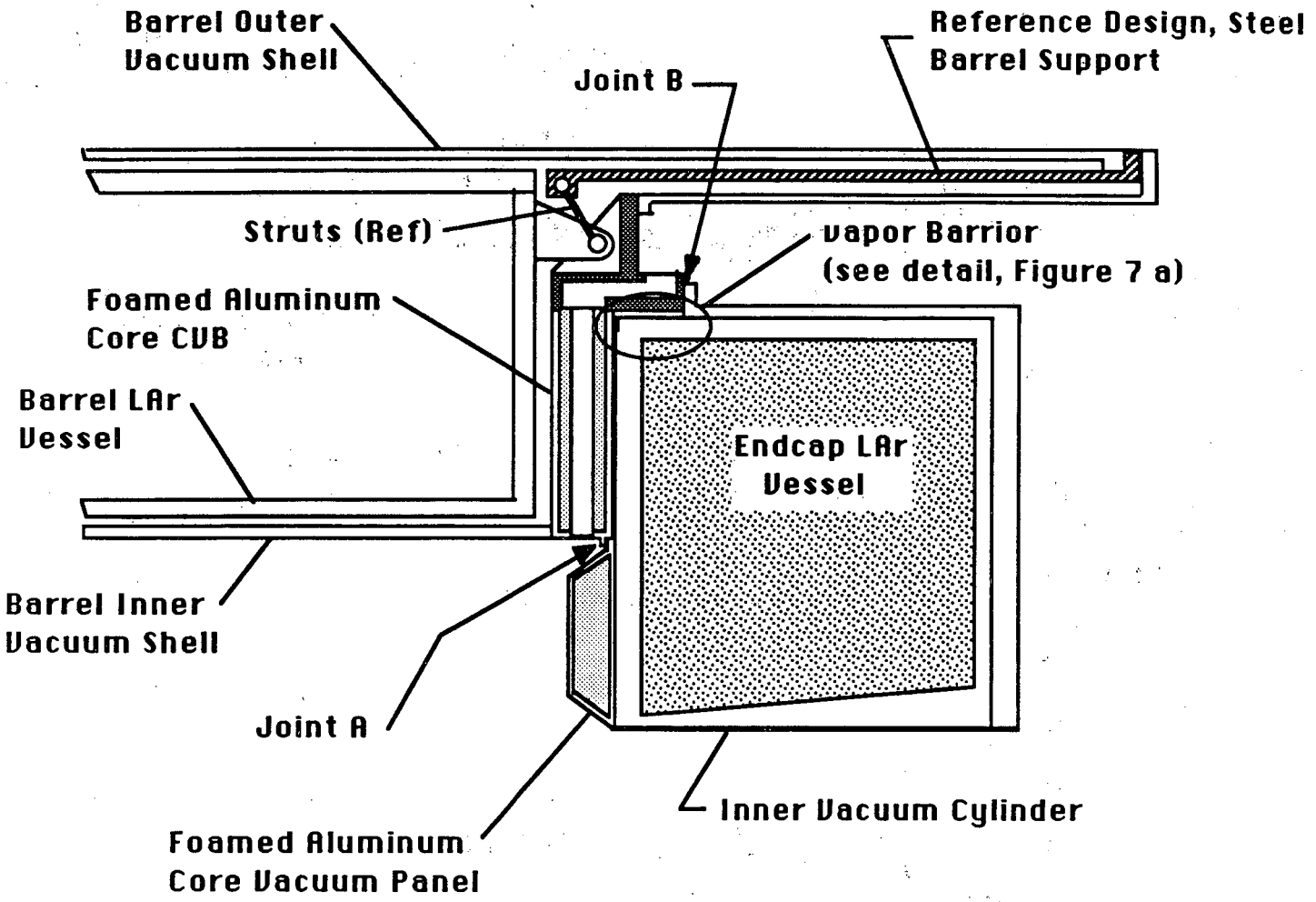

Figure 7 Pictorial Configuration of the Baseline Conceptual Design CVB as applied to the Reference Detector

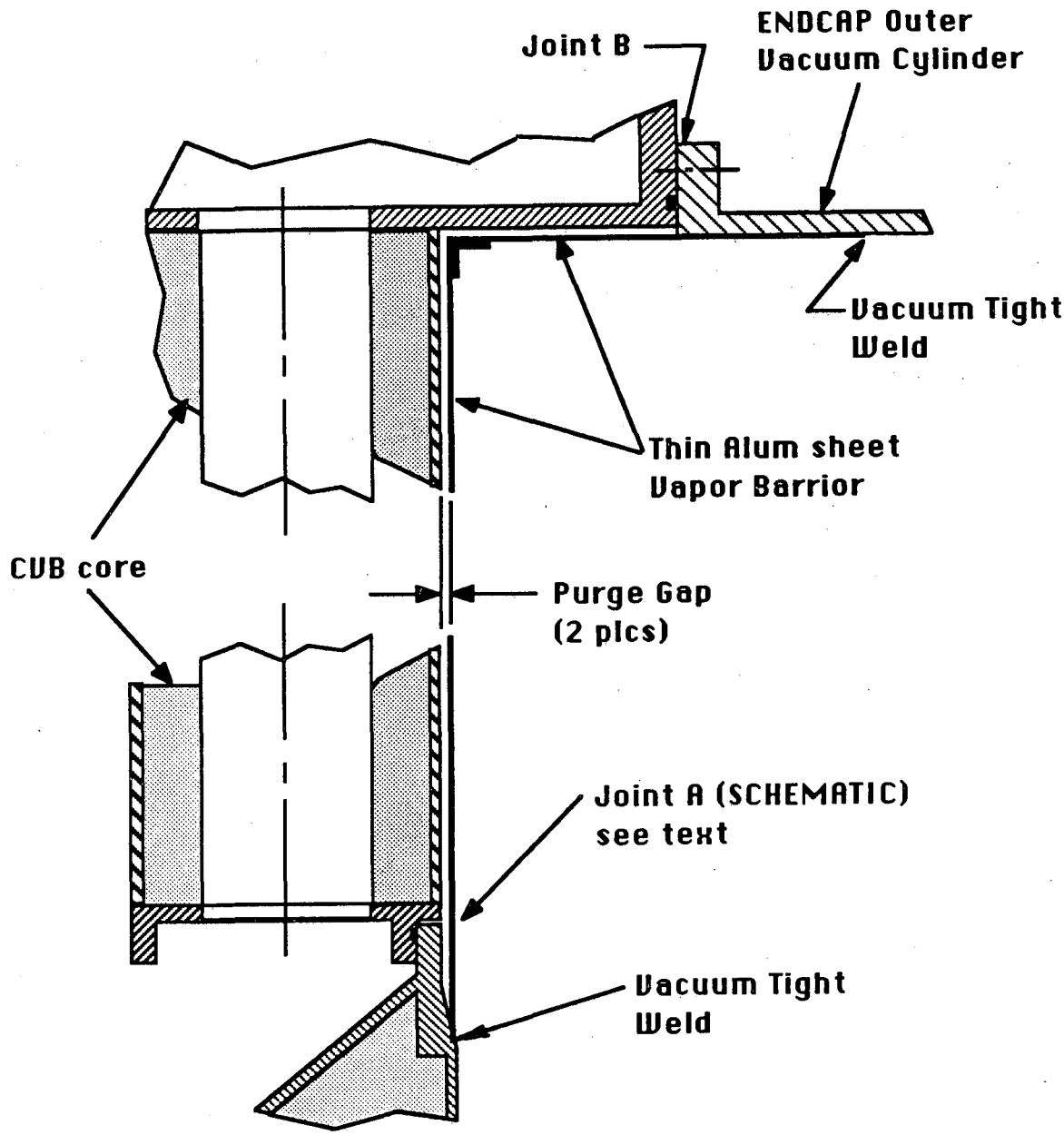

Figure 7 a Vapor Barrior Conceptual Detail
(see text for nomenclature)

FIGURE 8 CRYOGENIC SAFETY RELATED ISSUES

CONCERN

- Cryogenic vessel (Endcap) with 1 wall during standby
- Moving cold vessel (Endcap) with some cryogenic lines removed (if applicable)

PROPOSED SOLUTION

a) REMOVE THE ENDCAP'S LIQUID ARGON AND PREVENT LIQUID SIPHON FROM STORAGE.

b) VALVE DOWN ENDCAP'S ARGON SYSTEM TO SAY 5 PSIG RELIEF PRESSURE

c) MAINTAIN ACTIVE RELIEF VALVE ON ENDCAP'S ARGON SYSTEM AT ALL TIMES

--ALL CRYO TANK VACUUM VESSELS *MUST HAVE* LOW OPENING PRESSURE, LOW IMPEDANCE RELIEF SYSTEMS TO STORAGE AND/OR EXTERNAL ATMOSPHERE, AS APPROPRIATE, INCLUDING MM DESIGN--

FIGURE 9 OTHER POTENTIAL ISSUES

ISSUE	SOLUTION EXIST ?
GENERAL SAFETY	YES
ASSEMBLY & MAINTENANCE	YES
ASME CODE STAMP	
Applicability	Don't know
Required ?	Don't know
STRUCTURAL	
Vacuum (and upset) load sharing	
Operational	YES
Standby	YES
Vessel Support	
Operational	YES
Standby	YES
VAPOR BARRIER	
Radiation hardness	YES
Permeability	YES
Water vapor dripping	YES
Accidental punctures	YES
DRIFT CHAMBER ACCESS TIME	(See **Table 1**)
DRIFT CHAMBER REMOVAL	external disconnects req'd
ENDCAP LEAK TESTING	requires spare partial EC vacuum shell
VACUUM SEAL LIFE	YES
ADDITIONAL DEVELOPMENT ?	modest--foamed core & remote flange actuator

XIII APPENDIX

APPENDIX A--STANDBY HEAT LEAK AND AVAILABLE REFRIGERATION

A. Heat Leak Estimate

Flynn (Ref. 6) studied the performance of a variety of external vehicle multi-layer insulation systems for cryogenic rocket applications. He looked at 3 insulation thicknesses (1", 2", & 3") for 2 sets of boundary temperatures with 2 interstitial gas pressures--evacuated in space and filled with gas at 1 atm. in a bladder--simulating launch hold conditions. Flynn's annotated bibliography contains references to about 20 bladder systems which are not only designed to satisfy our conditions, but also the rigors of launch--high acceleration, rapid decompression, frictional drag and aerodynamic heating.

In principle, one could back-out from Flynn's report the relative heat leak ratio, RQ = Q(MLI+gas)/Q(Evacuated MLI), but several "corrections" from his conditions to ours would be required. Because of the complexity of that approach and the fact that details of his study are not generally available, we did the required standby heat leak calculations, and present the proceedure here.

Assume we need to know the relative heat leak in the MLI annulus given by;

$$RQ = Q(MLI + gas)/Q(Evacuated\ MLI) \qquad (A\text{-}1)$$

The basis of the calculation of RQ is as follows;

1) assume a suitable MLI system and appropriate boundary temperatures,

2) calculate the the Endcap's annulus heat flux for;

   a. Vacuum vessel on with no residual gas conduction

   b. Vacuum vessel off with MLI shorted by 1 atm Ar(g)

3) using the forgoing and a set of thermal performance expectations for an Encap design, compute the new standby heat leak including cables, piping, supports, etc.

We had information for 3), but with no details with regard to insulation type, thickness, layer density, or as-applied degradation factor. A specific set of these is not as useful as as knowlege of the behaviour of RQ over a broad range of these parameters, so we wrote a short code to do the calculations. These RQ calculations require a heat balance on the Vacuum Jacket for Case 2), a., and on the outer surface of the Vapor Barrier for Case 2), b..

A simple one dimensional, steady state heat balance on the "wall" which ignores small (< 10 %) area differences is;

$$hc(Ta-Tw) + hr(Te-Tw) - K(Tw-Tc)/t = 0 \qquad \text{(A-2)}$$

where ;

Ta is the ambient air temperature,
Tw is the "wall" (Vacuum Jacket or vapor barrier) temperature,
Te is the temperature of mean radiant surroundings,
Tc is the Endcap's Argon vessel wall temperature,
hc is the heat transfer coefficient for natural convection between the ambient air and the wall,
hr is the radiant heat transfer coefficient between the surroundings and the wall,
K is the thermal conductivity of the "insulation" --either evacuated MLI or gas shorted MLI,
t is the insulation thickness

To compute K we used the MLI correlations developed by Lockheed (Ref. 15) for crinkled, single aluminized Mylar (NRC-2) and used the simplified equations for air from Mc Adams (Ref. 16) for hc. A linearized approximation to the radiation equation was used for hr, which also assumed radiation from a black source, and a receiver which cannot see itself.

In the calculation of the MLI heat flux with 1 atmosphere interstitial gas, the thermal resistance was calculated from:

$$(RMLI)g = (RMLI)e \times Rgas/((RMLI)e + Rgas) \qquad \text{(A-3)}$$

where (RMLI)e is the thermal resistance (t/KA) of the evacuated MLI, and Rgas is the parallel thermal resistance of an EQUAL thickness of Argon gas. Our basic assumption, then, was that the gas and MLI heat flux simply add, with no attempt to compute the gas resistance on a layer-by-layer basis. Finally, since we have no idea what the

absorbtivity of the vapor barrier would be, we opted for conservatism and guessed on the high side using an emmisivity of 0.9.

The results of these calculations are shown in **Table A,1** along with the input assumptions. The first column of **Table A,1** lists the assumed MLI's applied degradation factor--that is the ratio of the heat flux as applied to a vessel, with slits, gaps, excess compression, etc, to that which would be measured in a guarded flat plate calorimeter with virgin MLI under ideal conditions. The second column is self explanatory. In the third column we have varied the assumed, as applied layer density from the Minimum Practical Layer Density--MPLD (that number of layers per inch to which NRC-2 MLI will stack at 1 g) to 1.2 times the MPLD. The 4th column lists the calculated ratio RQ as defined above, with no benefit assumed for a loose bladder (thick gas space). Column 5 lists the calculated values of (Ta-Tw) for gas shorted MLI. We **expect** that the vapor barrier will condence H_2O on humid days, and drip.

It is clear from **Table A,1** (for MLI in a vapor barrier at conditions applicable to large, high performance LAr calorimeters--with vessel heat leaks dominated by cables) that the heat flux ratio, RQ, would be **about** 100 or less.

Now for an idea of the probable maximum Endcap heat leak under standby conditions, we apply the forgoing to Mulholland's estimated radiation heat leak for D-Zero of 130 W (Ref. 4) to get 13 kW. Adding to this his estimates for heat leak from cables (1.12 kW), nozzles (0.083 kW), piping (0.024 kW), and supports (0.016 kW), we estimate that the total Endcap heat leak for standby conditions with 1 atm Ar(g) in a bladder system would be **about** 14.3 kW as opposed to about 1.37 kW in normal (evacuated) service. As additional reference information, we note that the steady state total system heat leak for D-Zero is about 5.65 kW.

We now need to know if the available refrigeration is sufficient to handle this greatly increased Endcap heat load. Although the warm-up time constant is obviously very large, adequate refrigeration will reduce re-cooling delays after long shut-downs.

B. Available Refrigeration

For corresponding values of available refrigeration, we again use estimates by Mulholland (Ref. 7) for the D-Zero system. Looking at the D-Zero system's Ar cooling loops, we find there is more than 60 kW of total refrigeration capacity (at gas-to-wall temperature differences of 50K) in the central (Barrel) calorimeter, and with a

TABLE A.1

Relative performance of 1 Atm gas filled & evac. MLI as a function of as-applied degradation factor, thickness, and layer density--NRC-2 per Lockheed correlations

MLI D.F. (dmls)	MLI thickness (inch)	MLI layer density (L/in)	RQ Q(w/gas)/Q(evac) (DMLS)	del Ta (Ta-Tw) (deg F)
1.0	0.50	60.	100.5	43.84
1.0	0.50	66.	106.8	43.82
1.0	0.50	72.	112.1	43.81
1.0	0.75	60.	97.0	33.17
1.0	0.75	66.	102.0	33.16
1.0	0.75	72.	108.3	33.14
1.0	1.00	60.	95.1	27.38
1.0	1.00	66.	101.1	27.37
1.0	1.00	72.	106.3	27.36
1.5	0.50	60.	67.4	43.99
1.5	0.50	66.	71.5	43.96
1.5	0.50	72.	75.1	43.94
1.5	0.75	60.	65.0	33.28
1.5	0.75	66.	68.4	33.27
1.5	0.75	72.	72.6	33.25
1.5	1.00	60.	63.7	27.48
1.5	1.00	66.	67.8	27.46
1.5	1.00	72.	71.2	27.44
2.0	0.50	60.	50.8	44.14
2.0	0.50	66.	53.9	44.10
2.0	0.50	72.	56.6	44.08
2.0	0.75	60.	49.0	33.40
2.0	0.75	66.	51.5	33.38
2.0	0.75	72.	54.7	33.35
2.0	1.00	60.	48.1	27.57
2.0	1.00	66.	51.1	27.55
2.0	1.00	72.	53.7	27.53

see Below for Details

*** Specific Input Assumptions ***

Ambient Air Temperature,Ta = 540.0 (R)
Mean Rad Surrounds Temp,Te = 530.0 (R)
Gas Barrier Ext. absorbtivity =0.900 (DMLS)
EC Characteristic Dim. Do (Ngr) = 15.00 (ft)
EC cold wall Temperature,Tc = 162.0 (R)
EC MLI thickness = 1.00 (in)
Number of MLI layers = 66
Applied Layer Density = 66.0 (layers/in)
Assum. Appl. D.F. = 1.5

********** Results **********
(Gas resistance in parallel w/MLI)
-- Number of iterations = 4 (Ref)

MLI heat flux (EVAC) = 0.445 (Btu/hr-ft2)
Gas heat flux (1 Atm)= 29.71 (Btu/hr-ft2)
EVAC MLI conductivity =0.00127 (Btu-in/hr-ft2-R)
- ABOVE MLI k FOR REFERENCE ONLY - NOTE UNITS -
Mean Ar Gas conductivity =0.0071 (Btu/hr-ft-R)
Tot Heat flux = 30.16 (Btu/hr-ft2)

Qtot/QMLI (q @ 1atm/q(Evac)) = 67.8 -NOTE-

*** Computed Details ***

Average Barrier Temperature,Tb = 512.5 (R)
Ext. Delta-T (Ta-Tb) = 27.46 (F) --DRIPS H2O ?--
Ext. Conv. HTC, Hc = 0.543 (Btu/hr-ft2-F)
Ext. Radient HTC, Hr = 0.873 (Btu/hr-ft2-F)
Ext. Prandtl No., Npr = 0.715 (DMLS)
Ext. X param (Ngr*Npr) = 0.138E+12 (DMLS)
Ext. Nusselt No.,Nnu = 548.95 (DMLS)
Const. in Nnu--Nnu=C(Ngr*Npr)**n =0.180 (DMLS)

call to Mulholland (Ref. 8), we find that each Endcap has about 60 % of the refrigeration capacity of the Barrel. Thus we see that the *existing* D-Zero cool-down system has about 2 1/2 times the required refrigeration capacity to handle the increase in Endcap MLI heat leak during standby while maintaining the EC's LAr vessel temperature at about 140 K indefinitely.

The forgoing example suggests that perhaps other large LAr calorimeter's cryogenic systems--designed to cool down very large, high density masses in reasonable times--may also have more than adequate refrigeration capacity to consider this concept.

APPENDIX B--CVB STRUCTURAL SIMULATION

The shell arrangement in the Strut region of **Figure 10** is a conceptual level attempt to allign the load paths between the Barrel mass and the iron yoke through rigid shell members and the struts (retaining, **as much as possible,** the *complex considerations* of module loading, assembly, and vessel close-out developed in Martin Marrietta's Reference Design), and to provide boundary conditions for the CVB such that the dominant stress on the CVB is due to bending from the unavoidable Barrel vacuum load and bending from the 12 psig Endcap LAr spill load--both loads acting in the same direction, but applied to opposite CVB facing sheets.

If we agree that the outer cylindrical cable egress box, with it's outermost annular plate, can be thought of as an **Arbitrarily Rigid Member** if adequately stiffened by an array of suitable Gusset Plates, G, a set of near controlling support/load conditions which *define* the configuration of the annular panel, Common Vacuum Bulkhead, A, are;

1) "fixed" outer edge (Ro = 132 inch),

2) "supported" inner edge (Ri = 63.0 inch),

3) a relative Z-displacement between inner and outer radii due to the difference in axial compliance of the Barrel Calorimeter's Inner and Outer Vacuum Shells,

4) a 14.7 psi distributed vacuum load, applied to the inside of the forward sandwich facing sheet,

5) and a 12 psig distributed gas load applied to the outside of the aft facing sheet.

B, 1 Welded Panel Construction CVB

Using an overall sandwich thickness of 8.0 inches, we did some hand calculations with stability equations from Reference 17 to define an initial set of face sheet and web plate thicknesses, and panel span dimensions. Kent Leung then ran a brief series of ANSYS calculations using "plate" elements and a realistic mesh which ignored the relative z-displacement above to arrive at the welded Common Vacuum Bulkhead design shown in **Figure 4.**

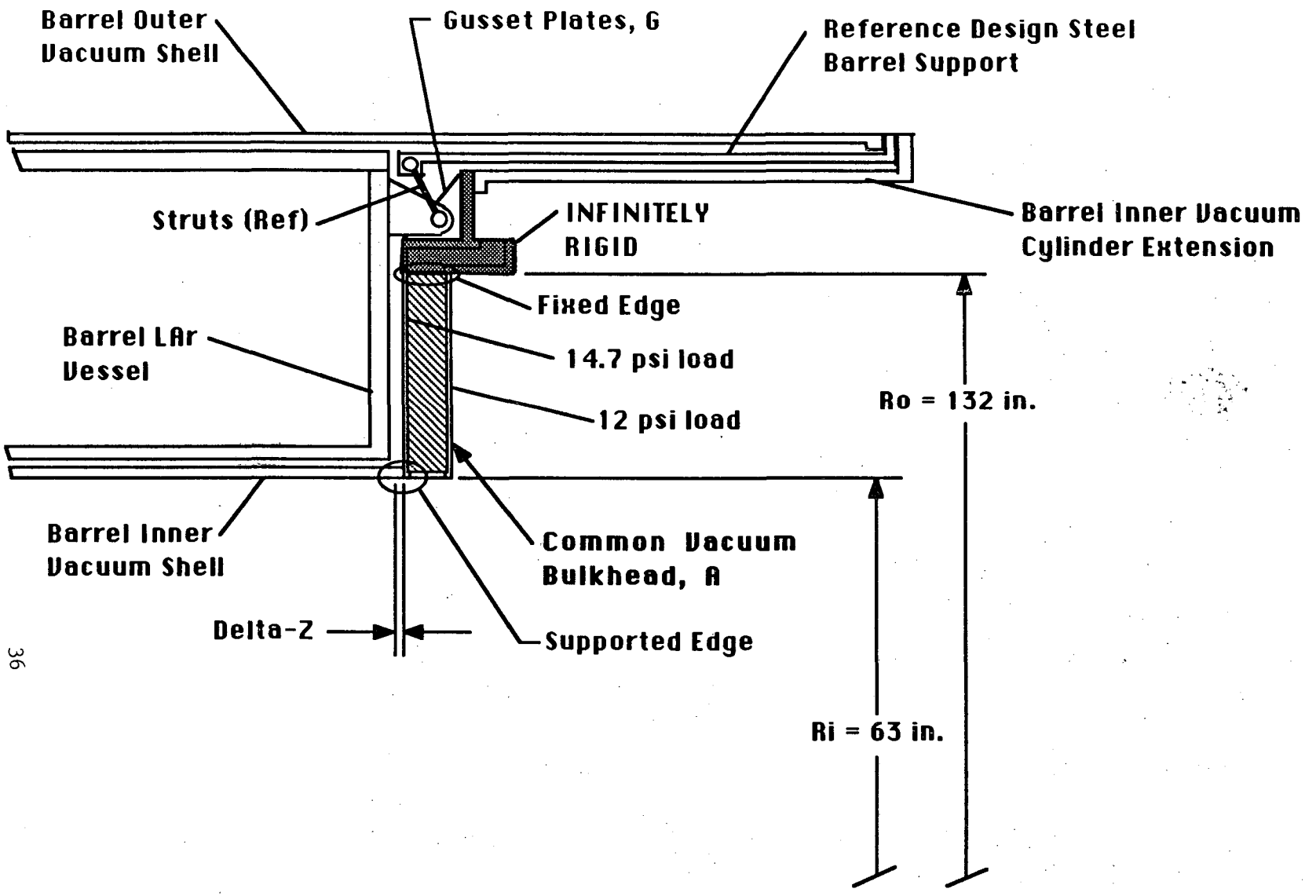

FIGURE 10

Common Vacuum Bulkhead structural idealization for ANSYS calculations (see text for details)

He then took the **Figure 4** head and re-ran the ANSYS analysis as above with an added 0.054 inch delta-z displacement applied to the panel's supported inner edge to roughly account for the relative axial compliance of the Barrel's vacuum shells.

The ANSYS stress and deflection characteristics of the welded panel bulkhead are shown in **Figures 11** through **17** where maximum stress criteria are noted on the plots. The maximum stress of about 10 ksi in the bulkhead occurs at the outer edge of the 1/4 inch thick face sheets and neither local nor overall stability appear to be a problem.

It thus appears that the welded Common Vacuum Bulkhead could be an 8.0 inch thick welded 5083 Aluminum Alloy sandwich panel consisting of 1/4 inch thick facing sheets with 5 each, 1/4 inch thick circumferential web plates (with variable radial spacing), and 40 each, 1/4 inch thick radial web plates from r=63 inch to r=107 inch, 40 each, 1/2 inch thick radial web plates from r=107 to r=121 inch, and finally 40 each 1.0 inch thick radial web plates from r=121 inch to r=ro=132 inch. The circumferential webs would have 5 1/8 inch diameter through holes to provide utilities egress for the Drift Chamber (the same total area provided in the Reference Design).

The mass of the CVB over the annular span between ro = 132 inches and ri = 66 inches (we assume about 3.0 inches of the inner edge region would be occupied by suitable flanges) is less than about 15 % (13 % not including weld fillets) of the mass of the 2 flat Aluminum heads it would replace in this region.

By now it should also be obvious that the Endcap's Forward Inner Annular Vacuum Plate (in **Figure 2a and 2b**) can also be **significantly** thinner than the 4.0 inch thick head of the Reference Design, because of axial support from the Barrel's Inner Vacuum Shell through the CVB flange set at the 63 inch inner radius. A simple 1.75 inch thick 5083 plate would do the job here for a 56 % mass reduction, but another sandwich panel could be used for much greater mass reductions.

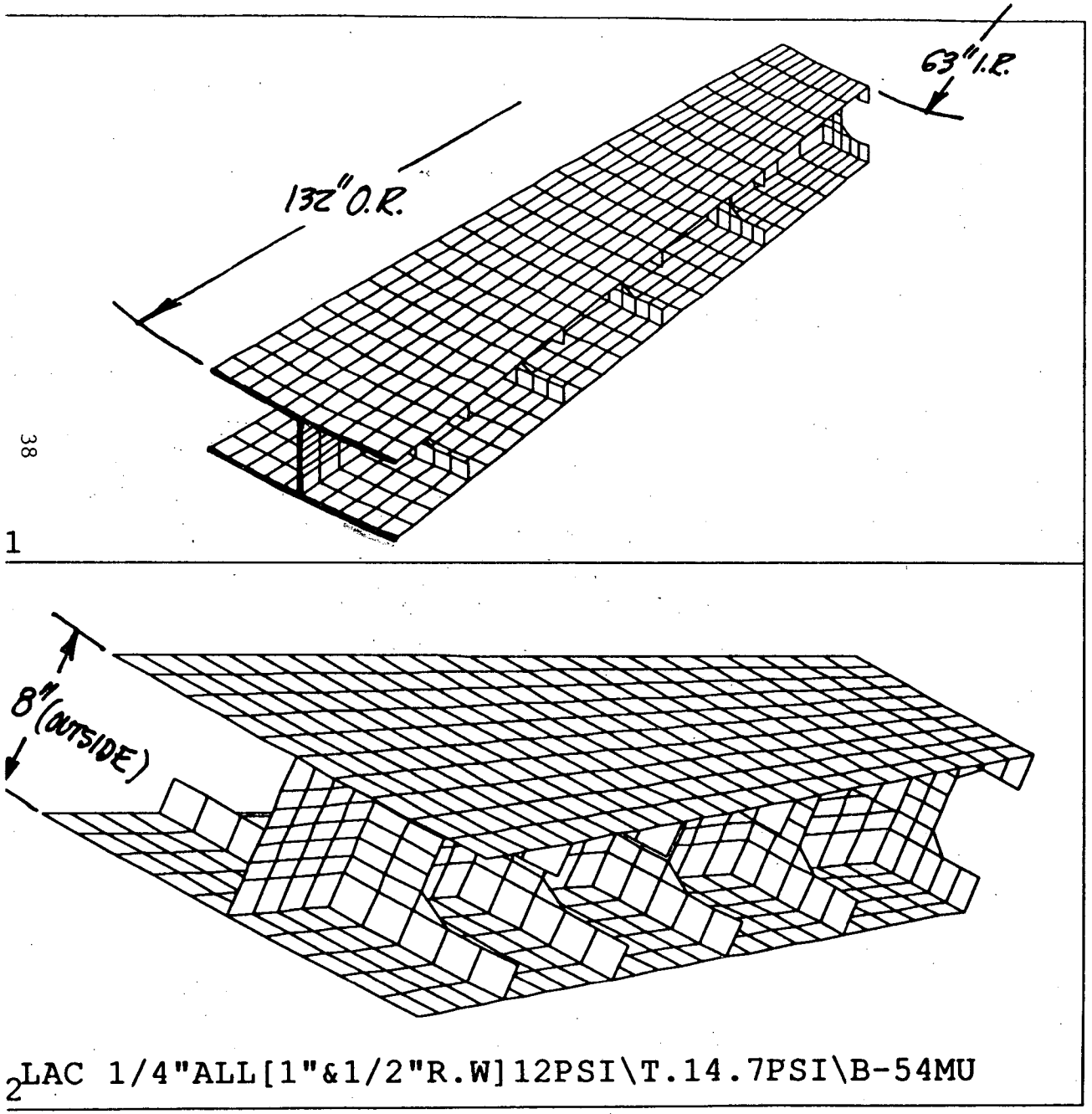

ANSYS 4.3
JUN 21 1989
15:59:25
PREP7 ELEMENTS

XV=1
YV=1
ZV=1
DIST=23.4
XF=99.6
YF=7.41
ZF=4
ANGL=-120
HIDDEN

WIND=2
XV=2
YV=1
ZV=.5
DIST=12.3
XF=98.8
YF=6.86
ZF=2.32
ANGL=-120
HIDDEN

FIGURE 11 – 9 Deg. Sector of CVB – See Text for thickness details

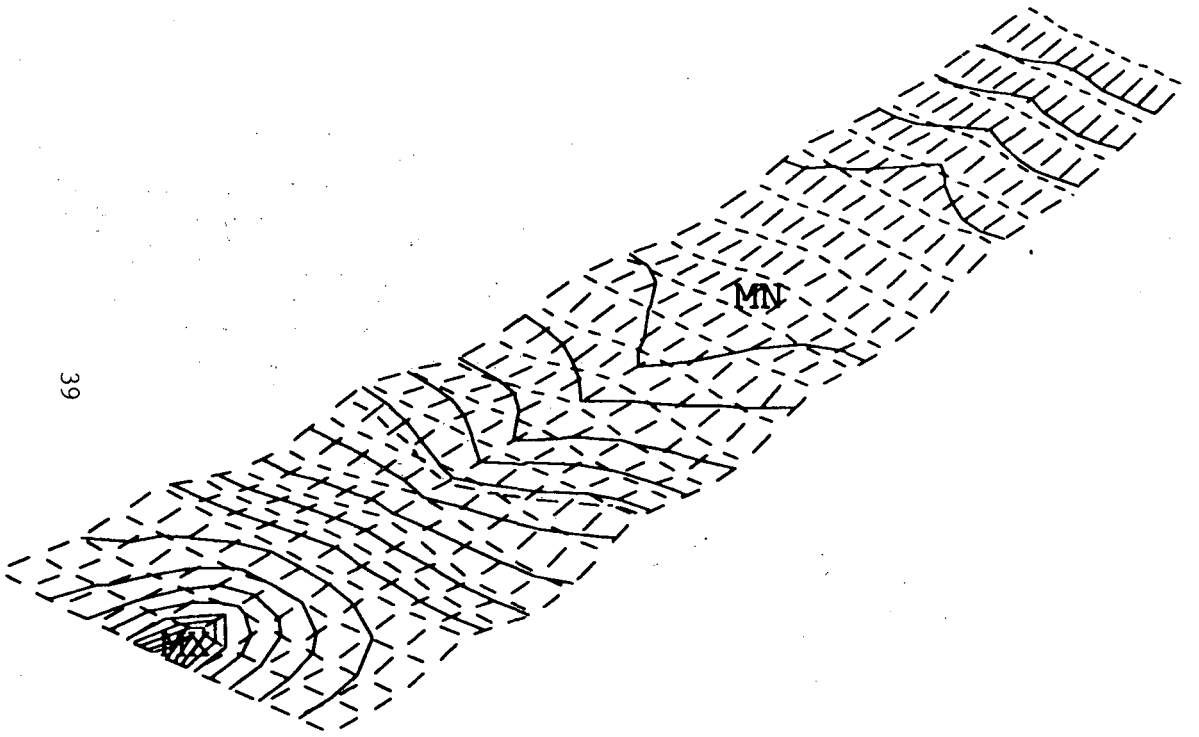

LAC 1/4"ALL[1"&1/2"R.W]12PSI\T.14.7PSI\B-54MU

ANSYS 4.3
JUN 21 1989
15:27:44
POST1 STRESS
STEP=1
ITER=1
SX (AVG)
MIDDLE
STRESS ELEM CS

XV=1
YV=1
ZV=1
DIST=31
XF=99.6
YF=7.41
ZF=8
ANGL=-120
MX=9667
MN=-3700
A=-3001
C=-1593
E=-185
F=519
G=1223
I=2631
J=3335
K=4039
M=5447
N=6151
O=6855
Q=8263
R=8967

T.F. (PSI)

FIGURE 12 Radial stress in the Top face sheet of CVB sector (less than 10KSI)

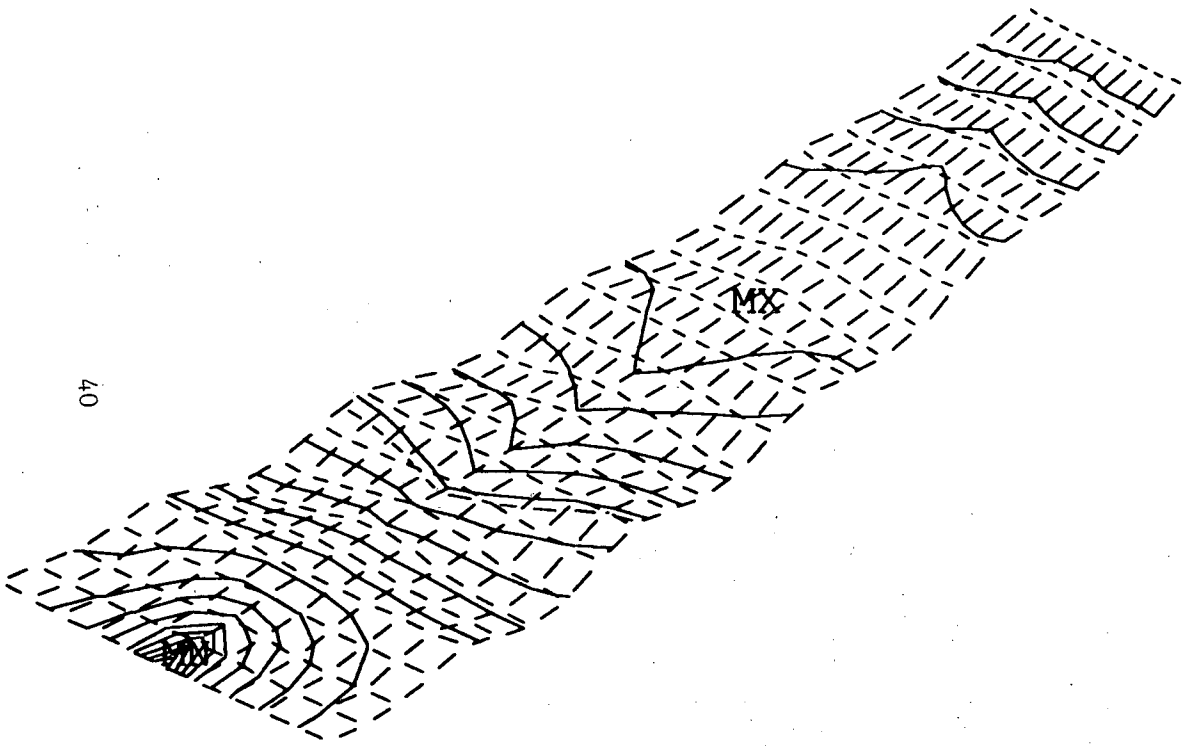

LAC 1/4"ALL[1"&1/2"R.W]12PSI\T.14.7PSI\B-54MU

ANSYS 4.3
JUN 21 1989
15:29:09
POST1 STRESS
STEP=1
ITER=1
SX (AVG)
MIDDLE
STRESS ELEM CS

XV=1
YV=1
ZV=1
DIST=31
XF=99.6
YF=7.41
ANGL=-120
MX=3688
MN=-9674
A=-8977
C=-7569
D=-6865
F=-5457
G=-4753
H=-4049
I=-3345
K=-1937
L=-1233
M=-529
N=175
P=1583
Q=2287
R=2991

B.F. (PSI)

FIGURE 13 Radial stress in the Bottom face sheet (less than 10 ksi)

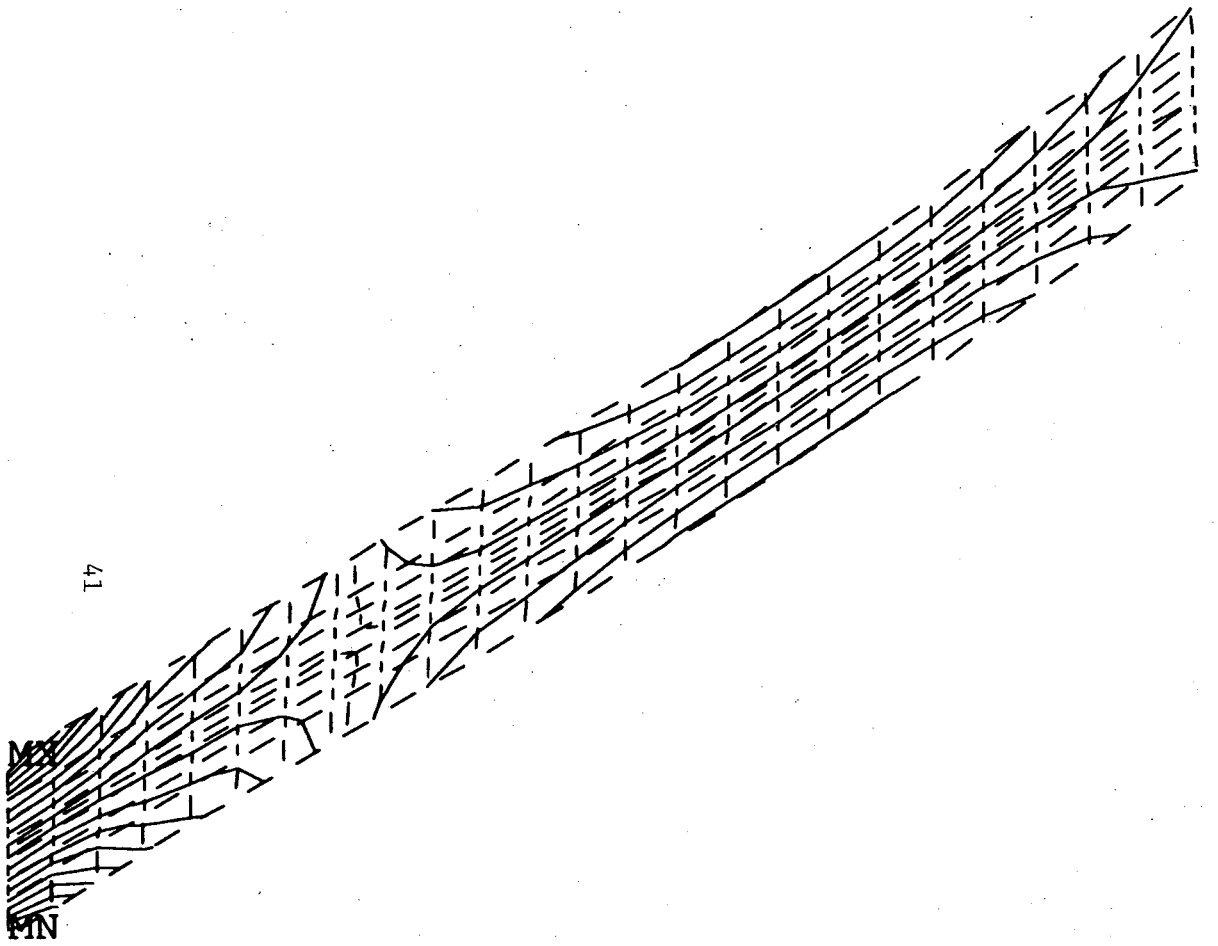

LAC 1/4"ALL[1"&1/2"R.W]12PSI\T.14.7PSI\B-54MU

ANSYS 4.3
JUN 21 1989
15:31:29
POST1 STRESS
STEP=1
ITER=1
SX (AVG)
MIDDLE
STRESS ELEM CS

XV=1
YV=1
ZV=1
DIST=24.6
XF=97.2
YF=7.65
ZF=4
ANGL=-120
MX=9341
MN=-9346
A=-8366
C=-6398 (R.W.) PSI
E=-4430
F=-3446
G=-2462
I=-494
J=490
K=1474
M=3442
N=4426
O=5410
Q=7378
R=8362

FIGURE 14 Bending stress in the CVB sector's radial web plate (< 10 KSI)
(of variable thickness – see Appendix B, 1 text)

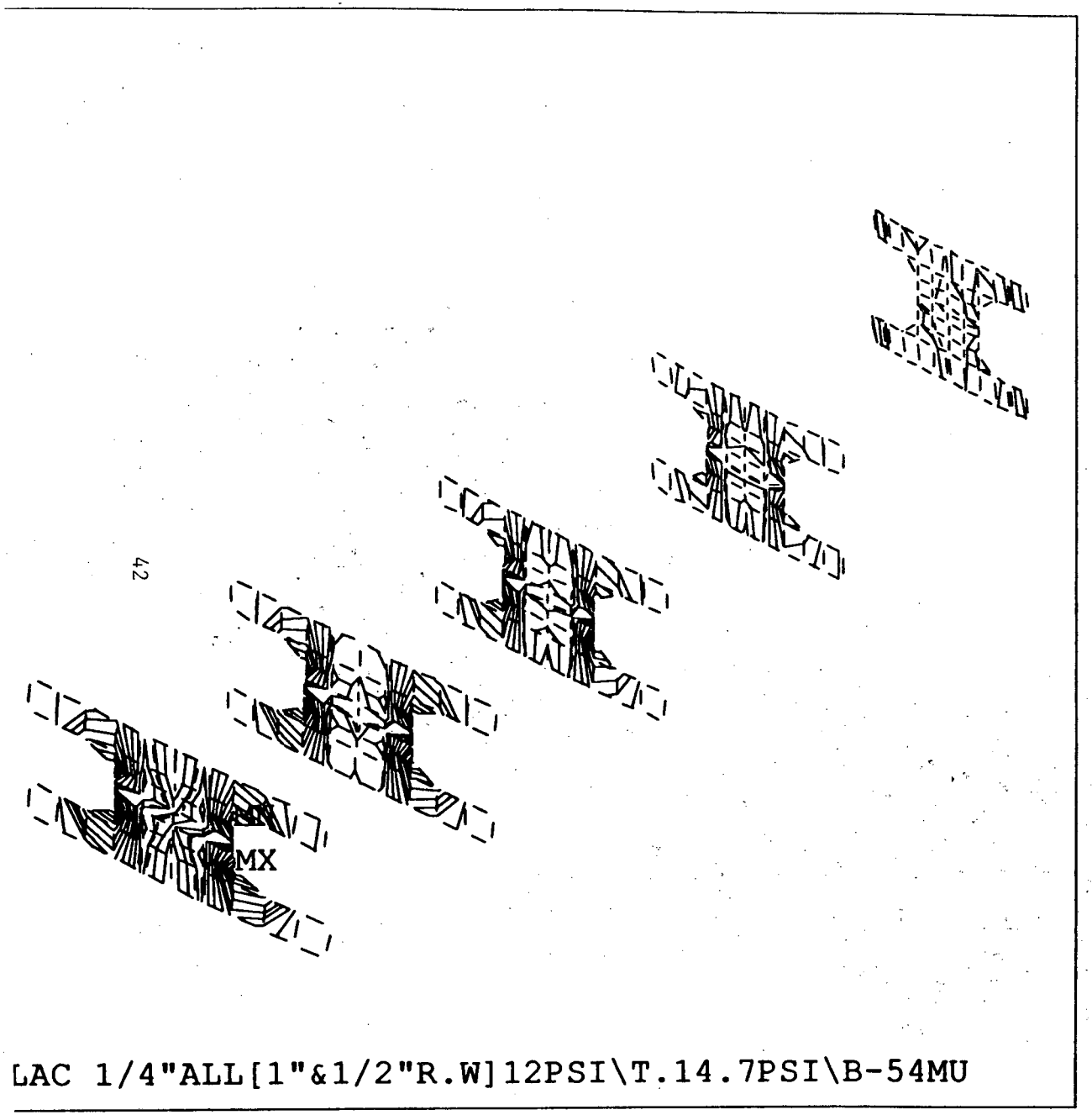

ANSYS 4.3
JUN 21 1989
15:32:33
POST1 STRESS
STEP=1
ITER=1
SX (AVG)
MIDDLE
STRESS ELEM CS

XV=1
YV=1
ZV=1
DIST=26.8
XF=93.9
YF=7.03
ZF=4
ANGL=-120
MX=2754
MN=-2121
A=-1868
C=-1354 (c.w.) psi
E=-840
F=-583
G=-326
I=188
J=445
K=702
M=1216
N=1473
O=1730
Q=2244
R=2501

FIGURE 15 Bending stress in the 9° sectors of the welded CVB's circumferential web plates (all 1/4" thk)

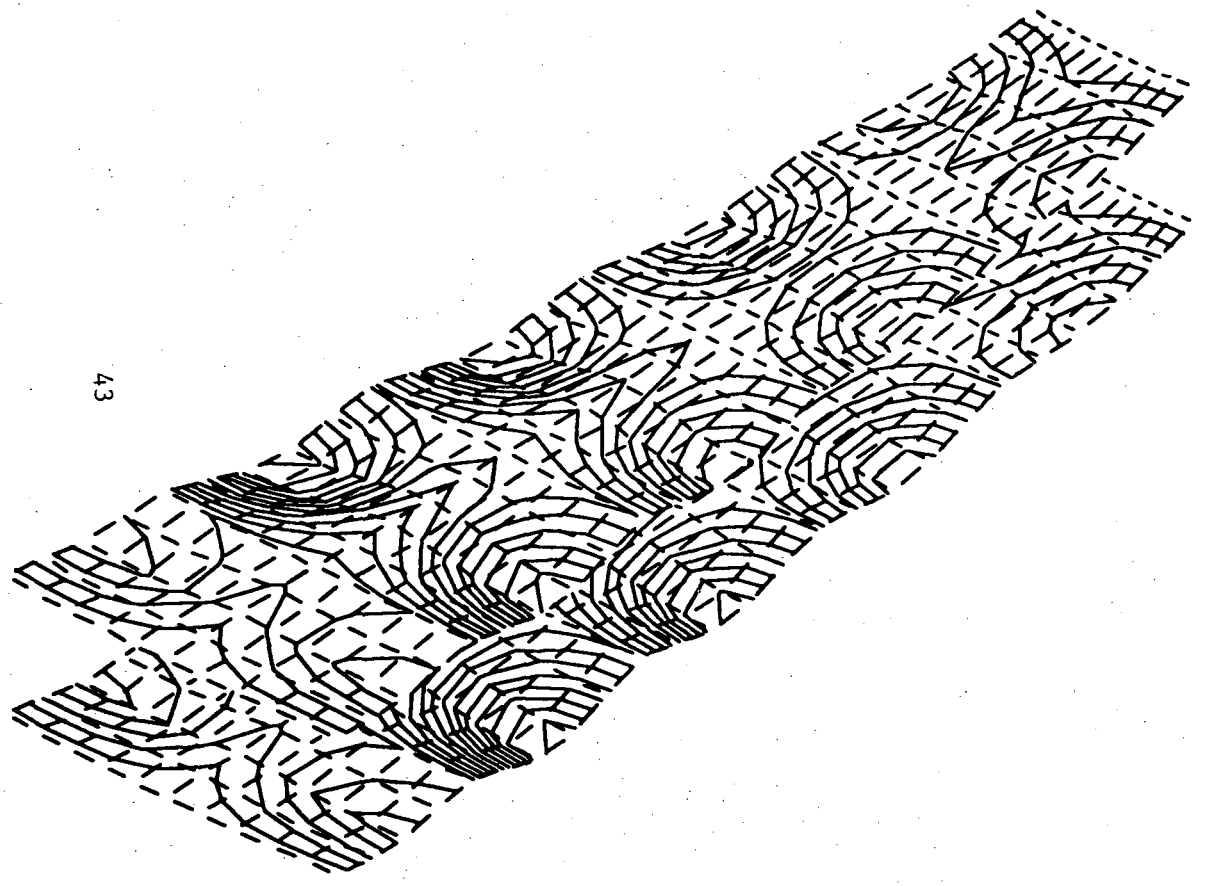

LAC 1/4"ALL[1"&1/2"R.W]12PSI\T.14.7PSI\B-54MU

ANSYS 4.3
JUN 21 1989
15:34:02
POST1 STRESS
STEP=1
ITER=1
UZ
DISPL NODAL

XV=1
YV=1
ZV=1
DIST=31
XF=99.6
YF=7.41
ZF=4
ANGL=-120
HIDDEN
MX=0
MN=-.128
A=-.123
C=-.109 T.F./B.F
D=-.102
F=-.0883 VERT DEF (IN)
G=-.0813
H=-.0743
J=-.0603
K=-.0533
L=-.0463
N=-.0323
O=-.0253
P=-.0183
R=-.00427

FIGURE 16 Lateral deflection in the CVB's z face sheets (about 1/8" maximum)

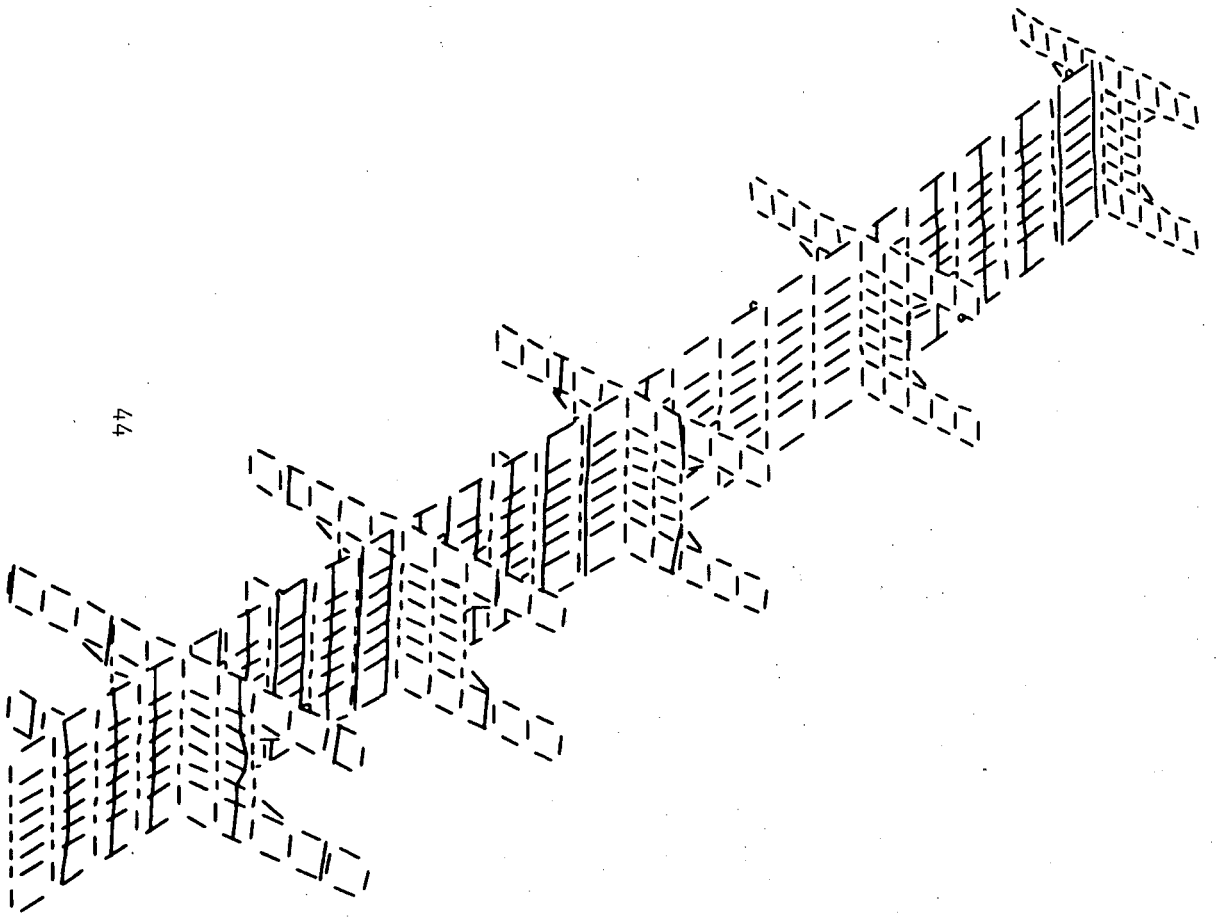

LAC 1/4"ALL[1"&1/2"R.W]12PSI\T.14.7PSI\B-54MU

ANSYS 4.3
JUN 21 1989
15:36:37
POST1 STRESS
STEP=1
ITER=1
UZ
DISPL NODAL

XV=1
YV=1
ZV=1
DIST=26.8
XF=94.7
YF=7.82
ZF=4
ANGL=-120
HIDDEN
MX=0
MN=-.0799
A=-.0765
C=-.0679
D=-.0636
F=-.055
G=-.0507
H=-.0464
J=-.0378
K=-.0335
L=-.0292
N=-.0206
O=-.0163
P=-.012
R=-.0034

C.W./R.W
VERT DEF. (IN)

FIGURE 17 Lateral deflection in CVB's (9° sector) web plate assembly (about .08" max)

B, 2 Foamed Aluminum core CVB

To determine the minimum weight configuration of a foamed core, brazed sandwich panel CVB for comparison with the Reference Design, we approximated (a narrow sector of) the annular (Ro = 132 inch, Ri = 63 inch) bulkhead's moment and shear boundary conditions with a unit width, uniformly loaded beam (p = 27 psi, L = 70 inch) with one end "fixed" and the other "simply supported". This beam approximation produces both maximum moments and shears which are *quite conservative*, so the subsequent relative mass plot, **Figure 5**, is also conservative.

Starting with a new, closed form, relationship for minimum weight sandwich beams from Reference 11, we made some minor corrections and eliminated approximations which developed into a consistent, iterative solution for stress constrained minimum weight sandwich beams, RFOBM (Ref. 12). One (simply supported) RFOBM beam design was tested for accuracy with ANSYS and found to be in excellent agreement.

Figure 18 is an example of an RFOBM output, which is one of the seven runs used to produce **Figure 5**. The 10 ksi maximum face sheet bending stress (which is also the face sheet's maximum principle stress) was used to allow direct comparisons with the Reference Design.

A relatively simple check of the consistency of the RFOBM results can be applied as was noted by Gibson & Ashby (Ref. 11, pg 262) : "when face sheet yield and core shear occur together" (in minimum weight sandwich panels subject to stress constraints) "the ratio of the weight of the faces to that of the core is 1:3". It follows then, *for cores foamed from the* ***same material*** *as the face sheets*, that ;

$$6\ T/Ch = Rho_C/Rho_S \qquad \text{(B-1)}$$

where T is the face sheet thickness, Ch is the core thickness, Rho_C is the density of the foamed core, and Rho_S is the density of the solid material from which the core is made. Equation (B-1) is plotted in **Figure 19**.

```
*********************************************
Failure load corrections have been applied on all iterations (10)
*********************************************

Wrat1 = 21.977667 Wrat2 =  8.671942

      p        pfy        pfw        pcs
   27.ØØØ    23.628  1Ø49.819    28.Ø99

IZONFYS =  1 IZONFWS =  Ø IZONFYW =  Ø

      p        pfyp        pfw        pcsp
   27.ØØØ    27.ØØØ  1Ø49.819    27.ØØØ

     tcor       chcor     rhoccor
    Ø.875     Ø.887     1.Ø27

     --REF. INFO. Foamed Metal Core Sandwich Beam--
     ***************************************************

     Optimum Values for this beam of Minimum Weight design
     subject to the specified Stress constraints are ---

     Overall Panel Height, Hopt     =     8.Ø131 (inch)
     Core Height, CHopt             =     7.6339 (inch)
     Face Sheet Thickness, Topt     =     Ø.1896 (inch)
     Core Density, RHOCopt =     Ø.Ø149 (lb/in**3)

     (W/A)min   =     Ø.1517 (lb/in**2)
     (W/A)core  =     Ø.1137 (lb/in**2)
     (W/A)faces =     Ø.Ø379 (lb/in**2)

     Calc. Face Sheet Max. Bend. Stress =  1ØØØØ.ØØ2 (psi)
     Calc. Core Max. Bending Stress     =    211.499 (psi)
     Calc. Core Max. Shear Stress       =    161.Ø37 (psi)

     Core Shear Yield Strength =    483.11 (psi)--per Ashby Corel.
     Elastic Modulus Ratio, Ef/Ec = 45.Ø4

     ---- INPUT STUFF (Arbitrary Assumptions) ---

     Face Sheet Yield Strength  =  28ØØØ.ØØ (psi)
     Face Sheet Elas. Mod., Ef  = 1ØØØØØØØ. (psi)
     Distributed load, p =  27.ØØØ (psi)
     Beam Length, L =   7Ø.ØØ (inch)
     Beam Width, b  =    1.ØØ (inch)
     Specified Core Shear MS      =  2.ØØØ
     Spec. Face Sheet Bending MS =  1.8ØØ
     Beam Type = 2 (1 = simple, 2 = one end fixed and
     the other simply supported
     ***************************************************

     ***************************************************
     --- Face Yield/Core Shear Fail Region ---
     ***************************************************

Approx. Relative (W/A) of CVB made with Composite 61Ø1-T6 Alum
Foamed Panel Construction at  27.Ø (psi) with design stress
margins of (MS)fsb =  1.8ØØ and (MS)cs =  2.ØØØ compared to
MM Baseline Design with 2 vacuum walls totaling  6.1Ø2 inch
of alum. [8.Ø inch space] is (W/A)cvb/(W/A)MM = Ø.249

*********** Beam Deflection & Stiffness/Weight *************

    Deflection due to Bending      =  Ø.Ø528 (in)
    APPROX. Defl. due to Shear     =  Ø.Ø248 (in)
    APPROX. Beam Deflection, Ymax =  Ø.Ø776 (in)
Above are approximate (LOW) because BOTH ends were assumed
FIXED for shear deflection calc.

    APPROX.(HIGH) Stiffness/Weight =  2293.95 (in-1)
```


FIGURE 18 Sample RFOBM output of data used to produce FIGURE 5

Figure 19 See text, Appendix B, 2 for details

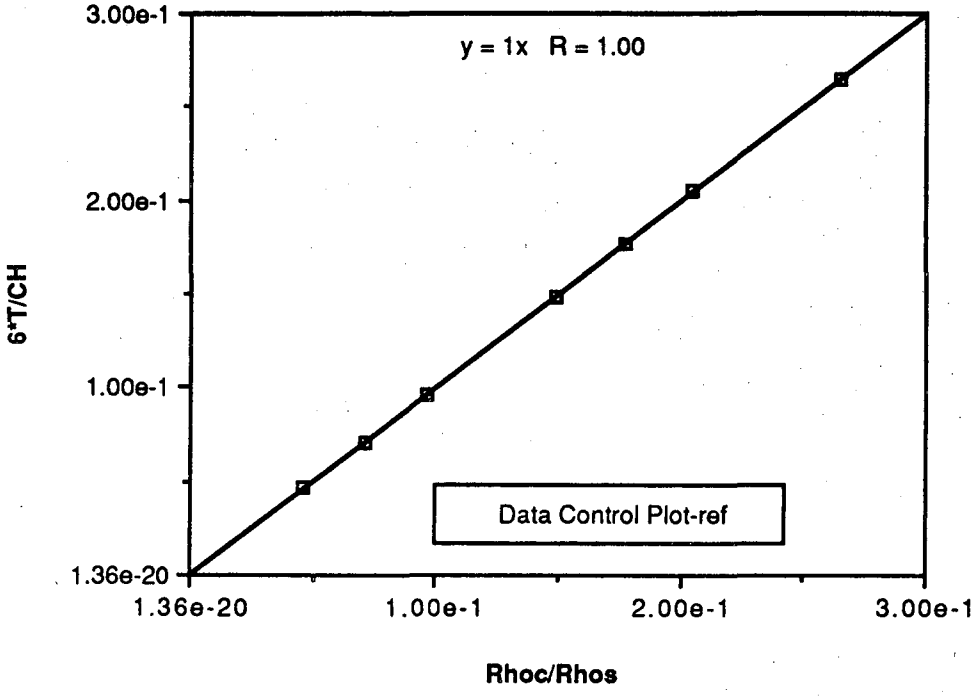

LAWRENCE BERKELEY LABORATORY
TECHNICAL INFORMATION DEPARTMENT
1 CYCLOTRON ROAD
BERKELEY, CALIFORNIA 94720