LBL-27587

# Lawrence Berkeley Laboratory
UNIVERSITY OF CALIFORNIA

## Engineering Division

To be presented at the SPIE 1990 Symposium on Astronomical Telescopes and Instrumentation for the 21st Century, Tucson, AZ, February 11–16, 1990, and to be published in the Proceedings

# Alignment and Calibration of the W.M. Keck Telescope Segmented Primary Mirror

C. Witebsky, R.H. Minor, E. Veklerov, and R.C. Jared

July 1989

LOAN COPY
Circulates
for 2 weeks
Bldg. 50 Library.
Copy 2
LBL-27587

Prepared for the U.S. Department of Energy under Contract Number DE-AC03-76SF00098.

## DISCLAIMER

This document was prepared as an account of work sponsored by the United States Government. While this document is believed to contain correct information, neither the United States Government nor any agency thereof, nor the Regents of the University of California, nor any of their employees, makes any warranty, express or implied, or assumes any legal responsibility for the accuracy, completeness, or usefulness of any information, apparatus, product, or process disclosed, or represents that its use would not infringe privately owned rights. Reference herein to any specific commercial product, process, or service by its trade name, trademark, manufacturer, or otherwise, does not necessarily constitute or imply its endorsement, recommendation, or favoring by the United States Government or any agency thereof, or the Regents of the University of California. The views and opinions of authors expressed herein do not necessarily state or reflect those of the United States Government or any agency thereof or the Regents of the University of California.

LBL-27587

# Alignment and Calibration of the W.M. Keck Telescope Segmented Primary Mirror

C. Witebsky*, R.H. Minor,
E. Veklerov, and R.C. Jared
Engineering Division
Lawrence Berkeley Laboratory
University of California
Berkeley, CA 94720

*Space Sciences Laboratory
University of California
Berkeley, CA 94720

Primary funding was provided by the California Association for Research, in Astronomy. This work was supported in part by the Director, Office of Energy Research, Office of Health and Environmental Research, Physical and Technological Divisin of the U.S. Department of Energy under Contract No. DE-AC03-76SF00098.

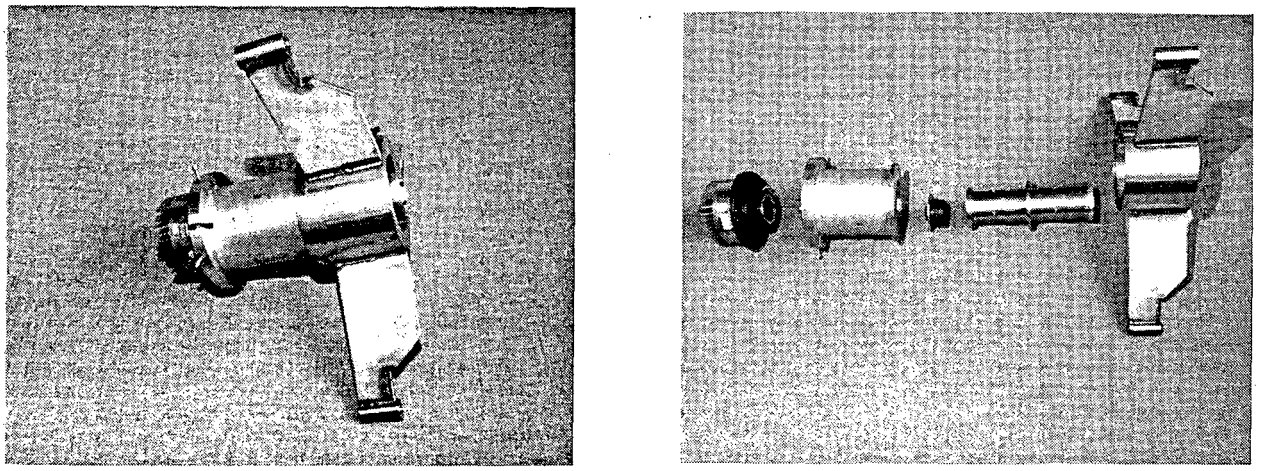

CBB 901-658 CBB 901- 660

Fig. 1: The star-stacking camera, assembled and partially disassembled

## 2. CAMERA

Mounted at one of the four f/15 bent-Cassegrain foci of the Keck Telescope, the star-stacking camera is designed around a commercial CCD camera head and support electronics from Photometrics Inc. A custom-designed set of reimaging optics provides a 40" x 30" field of view at the CCD. These components are mounted on the telescope by means of a spider assembly (Fig. 1).

The reimaging optics consist of a simple 200 mm focal length (f.l.) double-convex field lens and a compound 52 mm f.l., f/2.8 reducing lens, spaced so that the field lens images the primary mirror on the entrance pupil of the reducing lens. Two colored-glass filters between the lenses restrict the passband to wavelengths from ~ 620 to 700 nm, limiting the effects of atmospheric dispersion. These components are shown schematically in Fig. 2. The reducing lens, a commercial (Nikkor) double Gaussian enlarging lens operated in reverse, focuses the reduced image on the CCD array, providing sharp images in a flat field with very little distortion. Together, the lenses reduce the image by a factor of 3.3, changing the effective plate scale from 1.38 arcseconds/mm to 4.55 arcseconds/mm.

The camera head, a Photometrics model CH230, uses a Thompson-CSF frame-transfer CCD with an imaging array of 384 x 288 pixels, cooled to - 25°C by a thermoelectric refrigerator. Pixels are read out at ~ $10^5$ pixels/second and digitized by a 12-bit analog-to-digital converter (ADC) mounted on the telescope near the camera head.

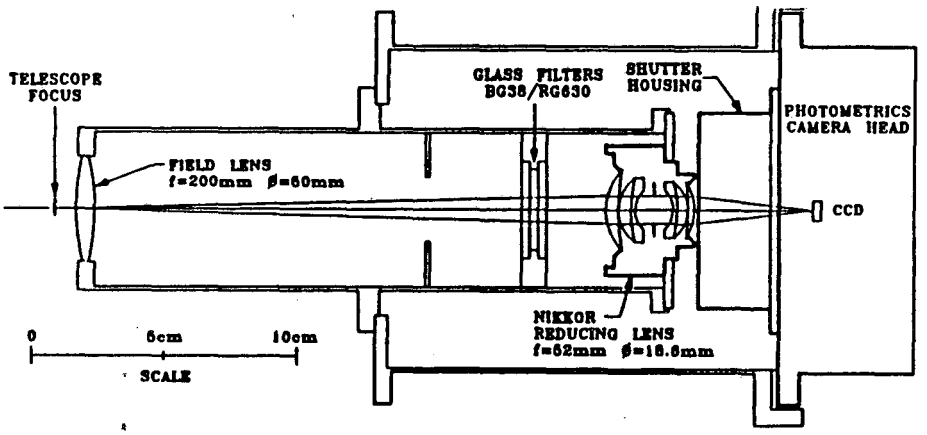


Fig. 2: A layout diagram of the reimaging optics and CCD camera head

LBL-27587

# Alignment and calibration of the W.M. Keck telescope segmented primary mirror

C. Witebsky*, R.H. Minor, E. Veklerov and R.C. Jared
Engineering Division
Lawrence Berkeley Laboratory
1 Cyclotron Road, Berkeley, CA 94720
and
*Space Sciences Laboratory
University of California, Berkeley, CA 94720

## ABSTRACT

We describe the camera, algorithms and software used to coalign (star stack) the 36 segments of the Keck Telescope primary. The camera and software also calibrate the sensors and actuators used for primary-mirror control and optimize the secondary-mirror position. Data resulting from these activities are used by the primary-mirror active control system to stabilize the primary segments and by the telescope drive and control system to adjust the secondary.

The camera must collect data at various telescope temperatures and zenith angles. The data acquisition and analysis are automated to improve the accuracy and repeatability of the results and to reduce the demands on the operator. Under the operator's guidance, a DEC VAXstation II computer analyzes star images, issues commands to move the optical elements and telescope structure, acquires settings from the telescope and primary control systems and stores the measurement results in a database.

## 1. INTRODUCTION

The Keck Telescope Active Control System (ACS) holds the primary mirror segments fixed, relative to one another, within a few nanometers of the settings provided to it.[1] This precision is useful, however, only if those settings coalign the segments so that all their images coincide. Mirror alignment is further complicated because gravity and temperature can affect the readings of the ACS primary-mirror position sensors.

The Keck Telescope calibration and star-stacking (CSS) system allows the operator to align the segments automatically, using star images acquired by a dedicated CCD camera, and to store the settings used to achieve the alignment. Settings acquired at a number of temperatures and telescope zenith angles can then be used to determine the desired ACS settings over the operating range. The system also allows the operator to measure and archive other ACS- and optics-related data--the gains and offsets of ACS sensors and actuators, and the measurements used to set the secondary-mirror tilt and focus--and to perform various preparatory set-up tasks. It cannot phase the segments--that task is performed by a separate camera[2]--but the segment alignment that it provides is a necessary prelude to phasing and is sufficient by itself for many observing needs.

Running on a Digital Equipment Corporation (DEC) VAXstation II workstation, the CSS software communicates with other external devices besides the CCD camera. An ACS interface program on the workstation acts as a conduit, transferring variable values over an Ethernet link between the CSS task and the VME bus-based ACS multiprocessor system that maintains the mirror figure. The Ethernet link allows the CSS software to exchange data with the drives and controls system (DCS) VAXstation, which controls the telescope pointing and tracking, positions the secondary and tertiary mirrors, and provides the observatory time standard.

A 130 m cable carries the digitized pixel values to the Photometrics CC200 camera controller, as well as carrying commands from controller to camera. The controller stores digitized image frames in a local cache, and either transmits them to the workstation or performs frame subtractions to remove dark current and other unwanted image features. The controller can also perform flat fielding (pixel-by-pixel CCD gain calibration), but measurements of the CCD uniformity indicate that this will not be needed. A general-purpose interface bus (GPIB or IEEE-488) links the controller with the workstation, carrying commands to the controller and image values and camera status data to the workstation.

## 3. OPERATION

The CSS task is largely menu-directed: the operator selects the desired functions from menus appearing on the screen. Additional information, such as telescope coordinates, is entered from the keyboard in response to prompts. An auxillary graphics window on the workstation screen displays the most recent star image.

When CSS is first invoked, it asks the operator for information concerning the star to be observed. After the telescope is pointed at the star, the program takes a 1 sec picture and displays it in the graphics window. A menu appears, asking the operator to choose whether to manually adjust the telescope pointing or segment alignment, to perform one of the four types of automated measurements, to choose a different star, or to exit the task. When the selected function has completed, a new image is shown and the menu reappears.

The manual pointing and alignment functions are an important prelude to automated measurements of segment alignment and secondary position because the automated measurements assume that all star images initially lie within ~ 0.5" of the center of the image frame. This assumption places a small burden on the operator, but it simplifies the task of locating centroid positions and matching images with segments during the automated measurements.

If the operator chooses to adjust the telescope pointing, she is asked to indicate the position of the center of the star image with the workstation mouse. Based on the indicated position, CSS then computes the pointing adjustments needed to center the image on the screen and sends a pointing request to the DCS VAXstation.

If a segment is badly out of alignment, the operator may choose to align it manually. If she selects this option, she is asked the number of the segment to be adjusted. CSS then takes two pictures--one with the segment in its initial orientation and a second with the segment tilted to shift its image--and the camera controller subtracts the second frame from the first one to remove all star images except the one formed by the chosen segment. CSS displays the difference frame on the screen and asks the operator to indicate the position of the segment image. It computes the segment adjustments needed to move the image to the center of the screen and issues the necessary commands to ACS.

Once the images are approximately centered and stacked, the operator may choose to perform automated measurements. If this selection is made, the program commands the camera to take a 10 sec dark frame, which will be used for dark-current corrections to any image frames acquired during an automated measurement. It then displays a second menu, asking the operator to indicate the type of measurement to be performed: star stacking (segment alignment), sensor and actuator calibration, secondary focus or secondary tilt. The chosen measurement is then carried out as described below. For those measurements that use the CCD camera, image frames are shown on the screen so that the operator can monitor the progress of the measurement and observe any unexpected behavior as it occurs.

If the measurement completes successfully, the operator is called upon to decide the fate of the resulting data. If the circumstances and measurement quality warrant, she may store them either temporarily or permanently in a database, together with a variety of parameters characterizing system and measurement conditions. Otherwise, she may discard them.

When the data have been measured and stored, CSS displays a new star image and its main menu once more, and asks the operator to choose the next operation.

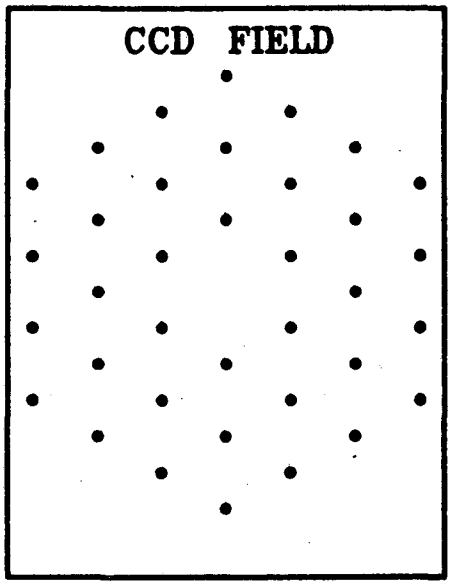


Fig. 3: Array of star images measured during star stacking

## 4. ALGORITHMS

### 4.1.1 Star stacking - Introduction

The telescope design requirements call for the centroid positions of star images to have an RMS scatter of 0.014" or less in each coordinate. To achieve this precision, roughly 20 to 40 times smaller than the radius of an individual image, the star-stacking algorithm must surmount a number of obstacles. These include clutter resulting from multiple overlapping images, centroid positioning errors resulting from optical aberrations in the telescope or the reimaging lenses, segment motion errors due to imperfect calibration of the segment displacement sensors, and image wander on timescales of seconds to minutes caused by atmospheric turbulence. The procedure must be repeated many times, so the algorithm should align all the segments in one operation to minimize the time required.

### 4.1.2 Star Stacking - Description

To eliminate image clutter and allow simultaneous alignment of all the segments, the star-stacking function commands the mirror segments to undergo a combination of tilt and poston motions (intersegment focus motion[2]), to space the images 5" apart in a hexagonal array (Fig. 3). The centroid positions of the displaced star images are then measured.

The centroid measurement is performed by a modified version of the FINDCENT routine from the Lick Observatory VISTA package. This routine starts by computing the centroid position of the pixel values within an octagon whose width and center coordinates are input parameters. It then centers the octagon on the centroid position and recomputes the centroid, performing the operation repeatedly until the change in centroid position from one iteration to the next is sufficiently small or until it exceeds the maximum allowed number of iterations. If it obtains a stable centroid position, it computes the RMS width and asymmetry parameters of the image centered on that location.

The segments are moved again to shift the images by twice the original amount in the opposite direction, producing a second hexagonal pattern with each star image shifted from its original position by an equal amount in the opposite direction. The centroid positions of this pattern are measured and the segments are restored to their initial positions.

The function computes the mean position of each pair of displaced star images. Because of the symmetry of the measurement, the mean values are equal to the positions of the unshifted centroids if the centroid motions are linear with segment tilt. In particular, the segments need not be moved by precisely known amounts, so long as they are moved by the same amount in each direction. If optical aberrations cause nonlinearities in the centroid motions, corrections can be added to the mean positions. Preliminary measurements of the camera optics indicate that such corrections should be 0.030" or less.

The mean positions are used to compute the segment motions needed to correct alignment errors. These are passed to the ACS, which implements them.

Atmospheric turbulence displaces short-exposure star images from their mean locations by as much as 0.2". To reduce the error from such image shifts, the star-stacking function samples over a longer interval to average out the image wander. In each of the two focus-mode settings it takes a series of four 10 sec exposures during a 50 sec interval. Each image frame is analyzed, and the centroid values from individual exposures are combined. This approach is similar to taking a pair of 50 sec exposures, but it yields additional information about image wander and possible tracking errors, and it allows us to observe brighter stars without saturating the CCD array. An analysis based on the work of Chanan[3] indicates that this approach should reduce the seeing-related error to a value between .014" and .050", depending on atmospheric conditions.

Uncertainty in the sensor gains can limit the accuracy of large tilt corrections, causing residual alignment errors. To reduce these errors, the procedure iterates until the tilt corrections are sufficiently small. Numerical simulations suggest that convergence should occur within two iterations.

To test for convergence, the function compares the measured rms and maximum image misalignment with the observed scatter in the centroid positions from one frame to another caused by image wander. The images are considered to be stacked successfully when the measured misalignments are no larger than the expected errors due to image wander. The procedure halts if more than four iterations are needed to stack the images. These convergence criteria make few assumptions about the accuracy of sensor calibrations or the characteristics of image wander. However, they are inefficient, since they require a final iteration to determine that the penultimate iteration stacked the images adequately. As we acquire knowledge and experience, we may be able to modify the criteria to reduce the number of iterations without sacrificing data quality.

### 4.2.1 Sensor and actuator calibration - Introduction

The ACS uses the position sensors and actuators to control the mirror figure. To respond rapidly and accurately to segment-motion commands, the ACS needs to know how many nanometers each sensor or actuator count represents--the design requirements call for 1% RMS accuracy for sensor gains and 2% RMS for actuator gains. The ACS also needs to know the residual offsets in the sensor electronics in order to interpret their readings correctly. The CSS gain-calibration function measures these parameters.

The position sensors read out the relative displacements of adjacent segments in digital counts.[4] Digital-to-analog converters (DACs) in the sensors permit the ACS software to adjust their gains and offsets. The circuit is designed so that the programmed offset, in counts, is proportional to the sensor gain and thus mimics a physical displacement of the sensor. The offset DAC for each sensor is individually programmed, whereas the gain-DAC settings are all controlled by the ACS sensor-range variable.

### 4.2.2 Sensor and actuator calibration - Description

Sensor and actuator calibrations are a multistep process. First, the offsets in the sensor electronics are measured. Next, the calibration function measures the sensor gains. Finally, the segments are pistoned to calibrate the actuators against the sensors.

To measure the sensor gains, one could command the segments to tilt and monitor the resulting changes in sensor readings and star image positions, but the behavior of the ACS feedback loop would make such a measurement difficult to interpret. Rather than trying to unravel the data from such a measurement, we take a different approach by calibrating the sensor gains with the offset DACs. The sensors remain fixed in position; only their control settings are altered.

During the sensor measurements, the characteristics of the ACS are modified to make the measurements feasible. The calibration function sets the gain of the ACS feedback loop[5] to zero to decouple the sensors from the actuators. This step prevents the actuators from responding to changes in the sensor readings during the calibration procedure. The function also reduces the time constant of the digital low-pass filter on the sensor outputs to shorten the effective response time of the sensors. Because the primary array cannot be actively controlled under these conditions, the telescope drive is halted for the duration of the measurement.

To measure the intrinsic offsets in the sensor ADCs and other sensor electronics, the calibration function sets the ACS sensor-range variable to a very large value, reducing the sensor gains virtually to zero. Under these conditions, sensor displacements and programmed offsets have a negligible effect on the sensor readings, so nonzero sensor readings can be attributed to the intrinsic sensor offsets. After the offsets have been measured, the sensor range is restored to its initial value.

To measure the sensor gains, the calibration function changes the offset-DAC settings by a specified amount (emulating a sensor move of ~ 10,000 nm) and observes the resulting change in the sensor readings. The response of a sensor reading to a change in its programmed offset is proportional to the product of the sensor gain and the offset change. By measuring the change in the output reading, the function derives the sensor gain.

The precision of the gain values depends on the dimensional tolerances of the sensors and on the precision of the offset DAC and associated electrical components. The dimensional tolerances of the relevant sensor components are all much better than 1%. The measured responses of a group of 12 randomly selected offset-DAC circuits agree with the expected value to better than 0.4%. When the gain of a test sensor was measured both by this technique and by mechanical means, the results agreed to within 1.3%.

With the sensor calibrations complete, the calibration function prepares to measure the actuator gains by restoring the ACS feedback and filter parameters to their normal values and loading the newly-measured sensor calibration coefficients into the control software. It then commands a group of segments to piston 20,000 nm. (The segments are divided into three groups, chosen so that no two segments in a group share a common boundary.) The control loop moves the actuators attached to the segments until the relevant sensor readings change by 20,000 nm. The function then divides the distance each actuator has moved (20,000 nm) by the change in its reading (~ 5000 counts) to derive its gain, typically 4 nm/count. Afterward, the segments are restored to their initial positions.

At the end of the measurement, the calibration function reloads the initial sensor coefficients in the ACS, resets all segments in their original positions and causes the telescope to resume tracking. If the measurements are successful, the calibration data can be stored in the database.

### 4.3.1 Secondary focus and tilt - Introduction

Actuators allow the secondary mirror to be pistoned and tilted remotely. The secondary focus and tilt functions measure the widths of star images over a range of secondary settings. These measurements are saved and later analyzed to determine the optimum secondary settings for a range of temperatures and zenith angles.

The main difference between these functions and the analogous measurements on more conventional telescopes is that segment-alignment errors can affect the width of the star image formed by the full primary array. To eliminate this ambiguity, we shift the images formed by one or more selected segments away from the rest of the group and measure their widths individually.

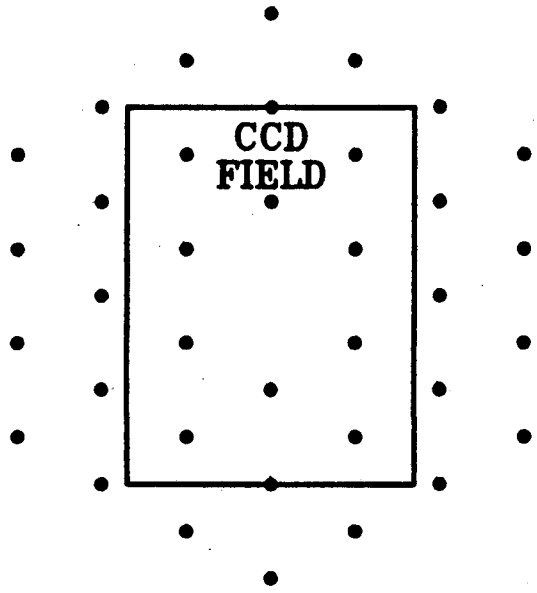


Fig. 4: Array of star imges measured during secondary focus

4.3.2 Secondary focus - Description

The main effects of secondary mispositioning are to shift the positions of the images formed by individual segments and to increase their sizes. The details of both effects depend on the type of mispositioning and the location of the segment.

The secondary focus function commands the segments to move so as to spread the images 10" apart, moving many of the images out of the field entirely (Fig. 4). It then takes a series of exposures with the secondary mirror pistoned by varying amounts and measures the widths of the images formed by the inner ring of segments. Pistoning the secondary alters all image widths equally and moves the centroids radially. To compensate for image motions, the function moves the segments to keep the centroid positions stationary. If the measurement completes successfully, the secondary settings and the squared image widths are saved in a database. Offline, the operator can analyze them to derive the setting that yields the minimum width.

4.3.2 Secondary tilt - Description

Tilting the secondary moves the images in a direction perpendicular to the tilt axis. The effect of coma on an individual image is to further shift its centroid position, with the magnitude and direction of the shift depending on the segment position and the secondary tilt axis, and to increase the image size and elongate it in a direction approximately perpendicular to the secondary tilt axis (Fig. 5). The changes in size and shape are most pronounced in the images formed by the outer segments, especially those farthest from the secondary tilt axis.

The secondary tilt function measures the size of star images as the secondary is tilted. The function performs two sets of measurements to determine the effect of secondary tilt about two orthogonal axes. Prior to the first measurements, the function tilts two of the segments most strongly affected by coma to move their images 5" away from the stacked images, as shown in Fig. 5. It then tilts the secondary mirror in steps about one of the axes and measures the image widths in the direction of maximum elongation at each position. After the measurements are completed and the settings restored, the function selects the appropriate segments for the second set of tilt measurements. It separates their images from the others and proceeds in a fashion similar to that described above, tilting the secondary about the second axis. Again, the secondary settings and squared image widths are saved for later analysis.

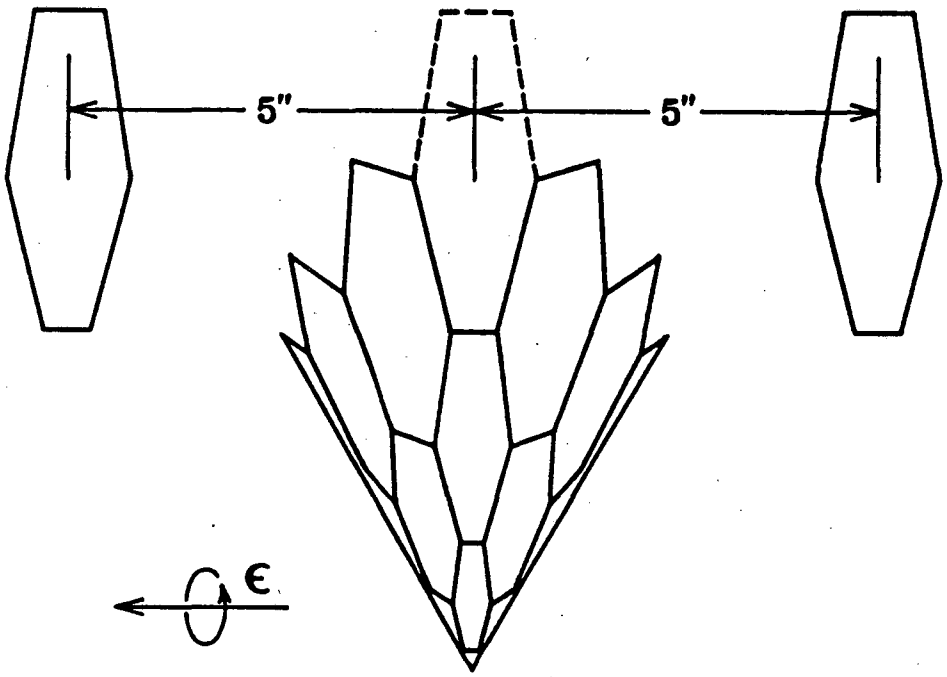


Fig. 5: Contributions of the various segments to the comatic imageresulting from a secondary tilt E. Two segments have been tilted to shift the images in the uppermost hexagon to the left and right.

## 5. CALIBRATION AND ALIGNMENT SEQUENCE

When the first group of segments is installed in the telescope, the operator will use the CSS functions to perform the initial calibration and alignment. Initially, the functions will be invoked in the following order:

1. Sensor and actuator calibration. This measurement does not require star images or segment alignment. The results of the measurement allow greater control over the segment motions that occur during later measurements.
2. Manuarl or automatic star stacking to prepare for the measurements that follow.
3. Secondary-mirror piston (to optimize focus). This measurement can be performed before the secondary-mirror tilt measurement since it is only weakly sensitive to coma. It should be performed before systematic automated star stacking since secondary motions can unstack the images.
4. Secondary-mirror tilt (to minimize coma). This measurement should also preceed systematic star stacking because of its effect on stacked images.
5. Systematic automated star stacking at multiple zenith angles and temperatures to determine desired sensor readings and actuator settings.

The CSS functions will be used during later phases of telescope operation as well. Each time a sensor or mirror segment is added or replaced, the sensors and actuators will be calibrated and the images restacked. An ongoing star-stacking program will monitor and correct for drifts in the sensor readings over time. Secondary-mirror piston and tilt will be remeasured and corrected as needed.

## 6. CONCLUSION

The CSS system allows the operator to calibrate and align the primary mirror array so that the ACS can maintain the primary-mirror figure and image quality to the required degree of precision over a range of operating conditions. The star-stacking camera and software have been completed and tested, both as an isolated system and in conjunction with the ACS software. The test results to date are all positive, but the crucial test will take place in the summer of 1990, when the system is installed and operated on the Keck Telescope.

## 7. ACKNOWLEDGMENT

We thank Jerry Nelson, Terry Mast and Gary Chanan for their numerous discussions, suggestions and contributions over the course of this project. Jack Franck was responsible for the mechanical design of the star-stacking camera and its mount. Davis Monet provided important early direction in the design of the reimaging optics and the choice of the center-finding algorithm. Primary funding was provided by the California Association for Research in Astronomy. This work was supported in part by the Director's Office of Energy Research, Office of Health and Environmental Research, U.S. Department of Energy under Contract No. DE-AC03-76SF00098. Reference to a company or product name does not imply approval or recommendation of the product by the University of California or the U.S. Department of Energy to the exclusion of others that may be suitable.

## 8. REFERENCES

1. R.C. Jared et al., "The W.M. Keck Telescope Segmented Primary Mirror Active Control System," this volume.

2. J. Nelson, T. Mast, and G. Chanan, "Aberration Correction in a Telescope with a Segmented Primary," Active Telescope Systems, F.J. Roddier, ed., Proc. SPIE, 1114, 241-257 (1989). Keck Observatory Report No. 1800.

3. G. Chanan, "Atmospheric Seeing and its Effect on the Alignment of Segmented and Multiple Mirrors," *JOSA A*, submitted, 1990.

4. R.H. Minor, A.A. Arthur, G. Gabor, H.G. Jackson, R.C. Jared, T. Mast and B. Schaefer, "Displacement Sensors for the Primary Mirror of the W.M. Keck Telescope," this volume.

5. R.W. Cohen, S. Andreae, A.K. Biocca, R.C. Jared, J. Llacer, J.D. Meng, R.H. Minor and M. Orayani, "The W.M. Keck Telescope Segmented Primary Mirror Active Control System Software," this volume.

LAWRENCE BERKELEY LABORATORY
TECHNICAL INFORMATION DEPARTMENT
1 CYCLOTRON ROAD
BERKELEY, CALIFORNIA 94720