LBL-27627

Lawrence Berkeley Laboratory
UNIVERSITY OF CALIFORNIA

Engineering Division

Invited paper presented at the 4th Workshop on RF Superconductivity,
Tsukuba, Japan, August 14–18, 1989

Review of SC/RF Refrigeration Systems

R.A. Byrns

August 1989

LOAN COPY
Circulates
for 2 weeks
Bldg. 50 Library.
LBL-27627
Copy 2

Prepared for the U.S. Department of Energy under Contract Number DE-AC03-76SF00098.

DISCLAIMER

This document was prepared as an account of work sponsored by the United States Government. While this document is believed to contain correct information, neither the United States Government nor any agency thereof, nor the Regents of the University of California, nor any of their employees, makes any warranty, express or implied, or assumes any legal responsibility for the accuracy, completeness, or usefulness of any information, apparatus, product, or process disclosed, or represents that its use would not infringe privately owned rights. Reference herein to any specific commercial product, process, or service by its trade name, trademark, manufacturer, or otherwise, does not necessarily constitute or imply its endorsement, recommendation, or favoring by the United States Government or any agency thereof, or the Regents of the University of California. The views and opinions of authors expressed herein do not necessarily state or reflect those of the United States Government or any agency thereof or the Regents of the University of California.

LBL-27627

Review of SC/RF Refrigeration Systems

R. A. Byrns

Engineering Division
Lawrence Berkeley Laboratory
1 Cyclotron Road
Berkeley, CA 94720

Invited Paper
4th Workshop on RF Superconductivity
KEK — Tsukuba — Japan

August 14-18, 1989

This work was supported by the U.S. Department of Energy under Contract No. DE-AC03-76SF00098.

LBL-27627

Review of SC/RF Refrigeration Systems

R. A. Byrns
Lawrence Berkeley Laboratory
Berkeley, CA 94720

Abstract

A short review is given of historical events in accelerator and cryogenic developments at both Stanford and Berkeley. Methods of refrigeration between 1.85 K and 4.5 K together with modern techniques and improvements are discussed. Where the decade of the 70's was the era of the screw compressor, the 80's can be considered that of the cold vacuum pump for superfluid cooling. Distribution methods are of major importance, and arguments can be made for bath or tube cooling, two-phase, thermo-syphon, supercritical or superfluid. System design affects reliability, safety and operating stability. Distribution costs and heat loads can be a large part of system totals. Some specific system descriptions are included:

Introduction

The San Francisco Bay Area has indeed been fortunate because of its mild "Mediterranean" climate, which provides an excellent stimulus for arts and science. It also has two great universities, and these schools in turn have had some excellent teachers. The importance of teachers cannot be over-emphasized. The Japanese especially revere and honor their teachers, using the term "sensei" as an honorific.

In the last sixty years many major industries have grown up around the schools of Stanford and Berkeley. At Stanford beginning with Terman, author of the classic "Radio Engineering" and Hansen, together with the Varians and myriad others, whole industries were established in Silicon Valley. Transistors, semiconductors, magnetic recording and computers became large, commercial empires. In Berkeley, Lawrence patented the Cyclotron in 1929 and founded the "large accelerator" industry. His students and co-workers went on to great success in physics — MacMillan developed the Synchrotron, Alvarez the proton Linac (standing wave), Wilson the Fermilab machine and Panofsky the SLAC. Giauque made important advances in low temperature work and also trained many in the field.

By 1946, after World War II, the whole physics community was primed to build particle accelerators, especially with all the micro-wave equipment available from military radar. At Stanford they pursued wave-guide electron accelerators, and in Berkeley synchrotrons and proton linear accelerators were developed. In part, because Stanford is private and can license patents individually and protect the developers, industrial growth has been much larger there than at Berkeley, which is a public university. Table I denotes some important events at both schools.

Refrigeration

The business of cryogenic cooling has had slow and continual improvements since Kamerlingh Onnes first liquefied helium in 1908 and later discovered superconductivity in 1911. These developments, while not as spectacular as those in electronics, have still been fruitful and contributed to many modern technical, scientific and medical fields. Worldwide demand for helium gas had doubled in the last six years, due to increased activity, especially in SC areas. Figure 1 shows how the capacity of helium liquefiers has grown in 80 years, from cc's to 4000L/hr.[2]

Invited Paper
4th Workshop on RF Superconductivity
KEK — Tsukuba — Japan
August 14-18, 1989

Table I

	Stanford[1]	U.C. Berkeley
1929		Lawrence patents the Cyclotron
1933		Giauque and MacDougall reach 0.25 K with magnetic cooling (adiabatic demag.)
1935	Hansen proposes Linac for X-ray production	
1938-39	The Varians and Hansen invent and develop the Klystron	
1942		Lawrence builds his 4.5 m cyclotron. MacMillan (and Veksler, USSR) propose the synchrotron
1945	Fairbank working with superconductors	
1946	Hansen, Ginzton, Woodyard investigated electron linacs with military magnetrons	Alvarez builds a proton linac with military magnetrons. MacMillan builds a 1 m diameter electron synchrotron
1947	Mark I electron linac, 4 m long, 6 MeV	
1948	Mark II, electron linac, 4 m long, 35 MeV	
1950	Mark III electron linac, 10 m long, 75 MeV, 3 klystrons	New ion sources and energies for the 4.5 m cyclotron
1952	Mark III, 27 m - 200 MeV - 8 klystrons	
1953	Mark III, 70 m - 400 MeV - 14 klystrons	The Bevatron, a 6 GeV proton synchrotron, is commissioned
1954	He^3 He^4 separation discovered by Fairbank	
1955	Mark III, 70 m - 600 MeV - 21 klystrons	The HILAC (Heavy Ion Linac) is built simultaneously with one at Yale
1956	Ginzton, Panofsky, et al. propose a 2 mile, 15-50 GeV, 480 klystron electron accelerator	A 1500 W (20 K) H2 refrigerator installed for the 72" Bubble Chamber
1960	Mark III, 100 m, 900 MeV, 30 klystrons	
1961	Congress approves 114 M$ for SLAC	
1962	Fairbank, Schwettman, Wilson propose a SC linac SLAC groundbreaking HEPL ring pair operational	88" sector-focused cyclotron commissioned Berkeley studies the 200 GeV proton synchrotron — later to become Fermilab
1966	SLAC startup 10 - 18.4 GeV	
1967	HEPL commissions a SC superfluid 1.85 K electron linac. SLAC achieves 20 GeV, 240 klystrons	Start study of high field SC accelerator magnets
1970	Free electron laser invented (Madey)	
1972	SPEAR (Richter) and SSRL operational	HILAC and Bevatron (Bevalac) combined for heavy ion work - cryopumps installed
1975		1500 W (4.5 K) He refrigerator installed for a pilot SC proton accelerator, ESCAR
1980	PEP ring installed	
		Neutral beam test facility for fusion, includes a 400 W (4.2 K) He refrigerator
1982		1.85 K superfluid He reefer commissioned for magnet development 20 TEV SSC studies and design
1989		

SLAC produces Z particles in their SLC. HEPL is still operating their SC Linac (accumulating many thousand hours) and doing important work with Free Electron Lasers. Berkeley is also doing some FEL and 2-beam accelerator study work, as well as constructing a new electron synchrotron and storage facility called the Advanced Light Source (ALS). This machine will be used for material, solid state and catalysis studies.

Now, most people who begin working with superconductivity, start with a dewar supply of liquid helium and simple pool-boiling cryostats. Of course, as the equipment grows larger and extends, the cryogenic cooling must develop into a system, rather than a batch process of dewar fill. Reliability and efficiency become important. Costs affect project approval very heavily. Superconductors can reduce magnet power costs considerably and also provide very high fields. Large savings in power costs are also possible with SC/RF systems as well as continuous (CW) operation. This provides strong motivation for the present planning at all the large electron accelerators: CEBAF, HERA, Tristan and LEP. Notable past work in cryogenic accelerator construction has been:

- The pioneering Stanford HEPL superfluid (1.85 K) recirculating electron linac (1967).[3,4,5]
- The two heavy ion linacs, Argonne's Atlas (1978) and SUNY's Stony Brook (1983)
- Chicago and Michigan (1980) superconducting cyclotrons
- The Cornell electron synchrotron, CESR (1983)
- The Fermilab proton synchrotron, Tevatron (1983) 24 Kw at 4.5 K.
- KEK's electron synchrotron, Tristan, with SC/RF cavities (1988).[11,12]

Most of the modern LHe cryogenic systems, closed loop refrigerators particularly, operate in a mixed mode as liquefier-refrigerator. They also may supply some cooling (40 - 80 K) for cryostat shields. It is important to recognize the differences; liquefaction can be thought of as cooling a separate stream of gas, adding at the compressor (300 K) and removing LHe, 4.5 K, at the cold box. This produces unbalanced flow in the heat exchangers where more mass flows in the forward direction than returns. This is a much more severe condition than the refrigerator mode where flows are equal. When dewar filled systems are used, the heat capacity of the helium from 5 to 300 K is often lost unless used for shields or power leads.

The relationship between liquefier and refrigerator capacities can be plotted as shown in Figure 2 for the Fermilab satellite refrigerator (one of 30 there) which can operate in many modes. Most refrigerators use only the upper half of the graph. It has the unique design of adding 5 gm/sec of LHe from the Central Helium Liquefier (CHL) to amplify its local cooling capacity to ~ 970 W. The CHL operates as a high efficiency liquefier (4000 L/hr) and serves to ballast the system, distributing pumped LHe to the 6 km ring.

Refrigeration of helium gas, GHe (as the working fluid) is presently accomplished by four methods, and modern plants may use all of the following techniques (except 5):

1. Cascade - Successive cooling in varied baths of boiling fluid, LN at 80 K, LH_2 at 20 K.

2. Joule-Thomson - expansion through a J-T valve, a constant enthalpy, non-reversible process, but simple and reliable.

3. Expander Engine - an isentropic, reversible process that can be very efficient, better yields, (30 - 40%) than J-T, uses either turbines or reciprocating pistons.

4. Vacuum pumps - LHe which boils at 4.2 K and 1 bar must be pumped to achieve lower temperatures, say 0.5 bar for 3.5 K and 10 mbar for 1.85 K. The earliest systems used warm (300 K) staged multiple vacuum pumps. More recent developments use cold pumps (1.8 - 30 K), either reciprocating or rotary.

(5). Magnetic Cooling (in development) adiabatic demagnetization, up to 50% Carnot efficiency between 1.8 - 12 K, possible future use in ~ 5 years.

The past performance of the old style, 1.8 K - 300 W plants — Stanford (1967)[3], Karlsruhe (1970-72)[6,7,8] and CERN (1976)[9] with warm pumps has been quite satisfactory. Only good vacuum design and practice is needed to prevent contamination due to air leaks. The more recent successful one-year operation of the Toré Supra Tokamak (1988-89) in southern France has demonstrated the advantages of cold turbo-pumps. There is now world-wide interest and competition in cold pumps. L'Air Liquide and Sulzer in Europe, IHI in Japan and Crearé, CCI and Rotaflow in the U.S., have all built cold pumps.

This has allowed CEBAF[10] to proceed in full confidence with their 2 K system with all cold pumps located within the insulation vacuum shell. Major advantages, noted by C. Rode, over warm pumps are in cost and technical areas and outweigh the inefficiencies created by cold pumping. The problems of huge low pressure heat exchangers and mega-watt warm vacuum pumps with purifiers and leak prevention maintenance are all reduced.

Another possible warm pump problem is with safety. Stanford had a serious Roots pump explosion due to overheating between stages. The development of the cold pump has opened the way for a whole new series of LHe plants working from 4.5 K down to superfluid at 2 K.

The additional components of the refrigeration system have all reached design maturity. Heat exchangers of the aluminum brazed plate-fin type are commercially available, as well as control hardware and logic.

The compressor provides the heart beat for the plant and also most of the power loss, 50 - 60%. The oil flooded positive displacement screw compressor in the last decade has provided much greater economy in capital and maintenance costs and greater reliability than many earlier compressor systems. Mean operational times between service can achieve up to 50,000 hours. Large foundation and vibration problems are reduced and eliminated. The oil flooding provides a good approach to efficient isothermal compression. Oil removal is possible into the ppb range, and commercial compressor and oil removal skid packages are available. The result in that most present day modern helium installations all use screw compressor modules.

Large helium refrigerators in the 5 to 10 kW range can reach 20% of Carnot efficiency. Plants of 5 - 10 kW are now becoming quite common and almost standard. (Table II)

Distribution

After the selection of the cold plant capacity and performance, the next step is LHe delivery to the cryostats and cooling method. This is an important task because the distribution system can easily approach or exceed the refrigerator capital cost and the total heat load of the cryostat.

The DESY HERA magnet installation transfer line distribution system cost was a significant fraction of the multiple cold plant price. (Price and cost mean different things to buyer and seller.) The recent CERN long-term test had 35 W available for RF loads out of 119 W total (26 W cryostat static plus 20 W shields and tuners plus 39 W transfer line)[13].

For most of the large electron accelerators, long strings of cavity cryostats are needed. The efficient method of LHe distribution is to use the cryostat as part of the transfer line. However, most of the large SC/RF cavity installations use a separate transfer line with supply LHe and return GHe plus the shield circuits. For the superfluid case the return GHe line must be rather large — 12 cm. diameter for Stanford and 15 cm. for CEBAF, to minimize vacuum pressure drops. Usually the LHe inlet feeds individual cryostats with level control and the exit valve may control the bath pressure. Connections between the main transfer line and the cryostat are made with control and isolation valves and "U" tube transfer lines. Such multiple connections are expensive but provide flexibility and isolation of separate cryostats during malfunction.

Most of the accelerators, both electron and ion, use bath cooling. The cavity is immersed in boiling LHe. Some of the ion machines use a gravity feed from a reservoir or thermo siphon, with tubes for circulation. At least three other dynamic methods are possible as developed for ring magnet cooling.

Both CERN and DESY are working on development of tube cooled cavities. Such a system has a bonded tube or shell on the cavity outer surface. LHe is circulated via gravity. The ideal design would have a thin SC film, sufficient for the sub-micron RF skin depth, bonded to a good thermal conductor such as copper. Electroplated lead (Stony Brook) and niobium (ANL),

sputtered Nb (CERN) and others have been used. An effective coat of high T_c superconductor would be most ideal. Tube spacing on the cavity wall gives a parabolic temperature profile:

$$\theta_m = \frac{ML^2}{8kd}$$

θ_m = max temperature between tubes (°C).
M = heat load, watts/cm.^{2}
L = tube spacing, cm.
k = thermal conductivity $\frac{W}{cm\ °C}$
d = cavity wall thickness, cm.

Major advantages for the tube cooled cavity are:[17]

- Reduction of LHe inventory by at least an order of magnitude.
- Elimination of microphonics and cavity frequency shifts due to bath pressure variations.
- Great safety improvements because of the tube higher pressure rating and the smaller LHe volume.

With regard to the microphonics problem, the bath cooled system, coupled with a relatively soft mechanical cavity, can create significant dynamic frequency shifts, unless the bath pressure is controlled to within millibars. For the Stanford and CEBAF systems, the low bath pressure, ~ 10-15 m bar, doesn't have a great amount of force to affect the cavity. For the 1 bar bath cryostats, KEK uses piezo dynamic tuners, and CERN uses nickel magneto-strictive tuners.

Safety

The LHe bath cooled system, with its large amount of liquid, exposed to a large area of potential air leak, in a soft vessel ~ 3 bar maximum, poses a severe safety problem. An even greater complication is created by the system installation in a 3-5 m diameter tunnel 10-20 m underground.

The German TÜV and the Japanese state of Ibaraki impose stringent rules for design and installation. In some cases, niobium is not considered a known engineering material, and mandatory semi-annual pressure testing is difficult and introduces contamination. CERN[14] has done recent pressure rise tests in up-to-air accident, and of course, the worst case is a bath cooled cryostat with air burst into the beam tube. The large LHe volume, with the maximum pressure capability of the Nb vessel — 2 mm wall, 3 bar maximum, means a large diameter safety relief valve to protect the cavity. This is sometimes difficult. An additional need is for fast, 50msec, beam vacuum valves to close on pressure rise. All of these factors make strong arguments for tube cooling. The tube can be designed for high pressures.

Heat Transfer, Loads and Design

To date there are no problems with cavity heat transfer to boiling LHe at 4.5 K or saturated superfluid at 1.75 K. Superfluid pressurization is not necessary; e.g., Toré Supra. The bath temperatures give uniform temperature and the superfluid gives instant heat transport. Heat flux doesn't exceed the nuclear boiling heat transfer rate.

In design it is well to remember the standards for superconductor design and to stay well within the triangular surface of limits created by the three axes of current, field and temperature. Some magnet designs have failed because of lack of safety margin, especially in the critical field region.

In the cavity cryostat design, first the static heat loads are calculated; conduction, radiation and convection, coupler, HOM and shields. The major load is the dynamic RF heat. This load

capacity is a function of frequency and temperature. Also the quality Q and the geometrical structure impedance affect the power loss.

The power loss per unit length on the cavity wall is given by INFNI - Frascati[16] in terms of cavity impedance.

$$P = \frac{E_a^2}{(r/Q)Q}$$

E_a = accelerator field
r/Q = geometric characteristic impedance
Q = unloaded quality factor

For: (r/Q) = 383 ohm/m; E_a = 5 MV/m and $Q = 2 \times 10^9$ at 4.2 K
P = 33 W/m, add at least 2 W/m static cryostat loss,
overall useful length = 4.8 m (effective cryostat ℓ = 10 m)
P = 180 W ; - use 400 W refrigerator

Optimizations can be made for selection of operating temperature. CEBAF[10] for their 1500 MHz system selected 2 K. CERN[15] for their 350 MHz cavities first calculated 2.4 K, but after consideration of cryo plant efficiency, selected 4.5 K. The Stanford machine, 1300 MHz, was first operated at 4.2 K, then achieved higher accel fields and Q as the temperature was lowered. Below the λ point, noise from bubbles decreased, the field gradient increased and the heat transport improved (1.825 K best).

Important design points to consider according to A. Schwettman are:

- Provide sufficient free surface area on the top of the LHe bath. Too little area can create noise and vibration due to bubble formations.
- Consider the advantages of 1.8 K vs. 4.5 K operation.
- Weak mechanical structures can contribute to noise and frequency shifts.

References:

1. Neal, R.B. "The Stanford Two-Mile Accelerator" (1968). W.A. Benjamin -27.
2. Quack, H. Proc. Workshop on SC Magnets and Cryogenics, 284, BNL 52006 (1986).
3. Collins, S.C., Stuart, R.W., Streeter, M.W., Rev. Sci. Instr. 38 (1967) 1654.
4. Wilson, P.B., Schwettman, H.A., Fairbank, W.M., Status of Research at Stanford on SC Electron Linacs HEPL-302 (1963).
5. McAshan, M.S., Schwettman, H.A., Suelzle, L., Turneaure, J.P., Development of the SC Accelerator HEPL-665 (1972).
6. Glatthaar, R., Kleim, E., Sellmaier, A., Proc. ICEC 3 Berlin (1970) 310.
7. Baldus, W., Adv. Cryo. Engr. 16 Plenum Press (1971).
8. Daus, W., Ewald, R., Cryogenics, Oct. 1975, 591.
9. Steel, A.J., Bruzzi, S., Clarke, M.E., Proc. ICEC 6 Grenoble (1976) 58.
10. Rode, C., CEBAF Design Report, Chapter 11, Cryogenics.
11. Hara, K., Hosoyama, et al., Adv. Cryo. Engr. (1987) 615-622.
12. Kojima, Y., et al., Part. Acc. Conf. (1989) Chicago.
13. Boussard, D., et al., CERN/EF 89-2 "Long Term Test".
14. Cavallari, G., et al., CERN/EF/RF (1989) "Safety Tests".
15. Bernard, P., Erdt, W., et al., 11th ICEC (1986) Berlin.
16. Aragona, A., et al., Proc. Third Workshop on RF/SC, Argonne (1987) 169.
17. Dwersteg, B., Proch, D., et al., Ibid., Argonne (1987) 81.
18. Hands, B.A., "Cryogenic Engineering" (1986) Academic Press, 373.

Table II

Large Helium Refrigerators and Liquefiers[10]

		Temp. (K)	Capacity (KW)	No. Units	Status
1	TEVATRON	4.5	29	1 + 29	Operational
	FERMILAB	4.6	10 x 0.6	10	Operational
2	CBA - BNL	4.3 (55)	24 (60)	1	Commissioned
3	HERA - DESY	4.35 (60)	3 x 8.3 (3 x 20)	3	Operational
4	EXXON - WYO.	~ 4.4	2 x 2600 L/hr.	2	Operational
5	MFTF - LLNL	4.35	10 + 3.3	2	Commissioned
6	TRISTAN - KEK	4.4	4.5/6.6	1	Operational
7	CEBAF -	2.0 (45)	4.8 (12)	1	Fabrication
8	CITIES SERVICE	~ 4.4	2400 L/hr	1	Operational
9	KRH - KANSAS	~ 4.4	900 L/hr	1	Operational
10	TORÉ SUPRA	1.75 (4.0)	0.3 (0.7)	1	Operational
11 - 20	4 to 1 Kilowatt, commercial liquefiers, CTi 1500 W Refrigerators				

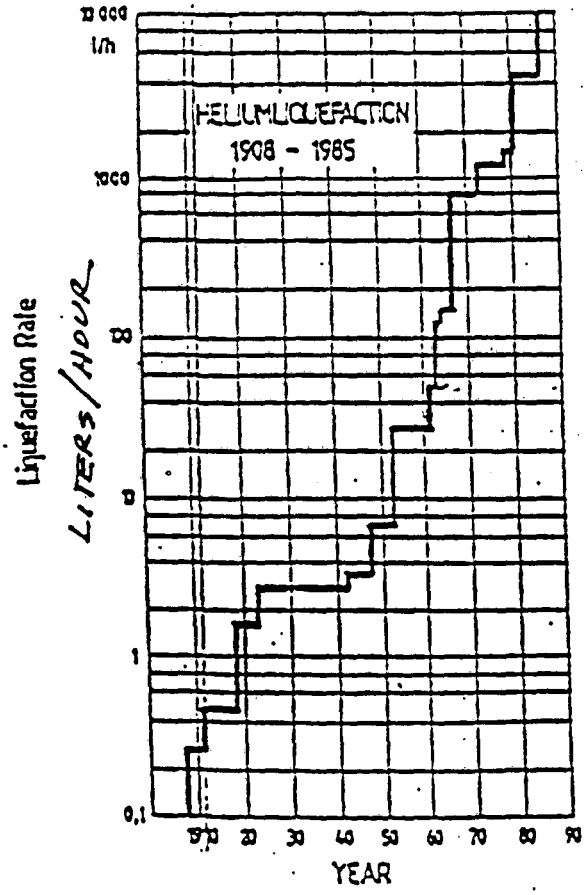

Fig. 1. HELIUM LIQUEFIER CAPACITY GROWTH (REF. 2)

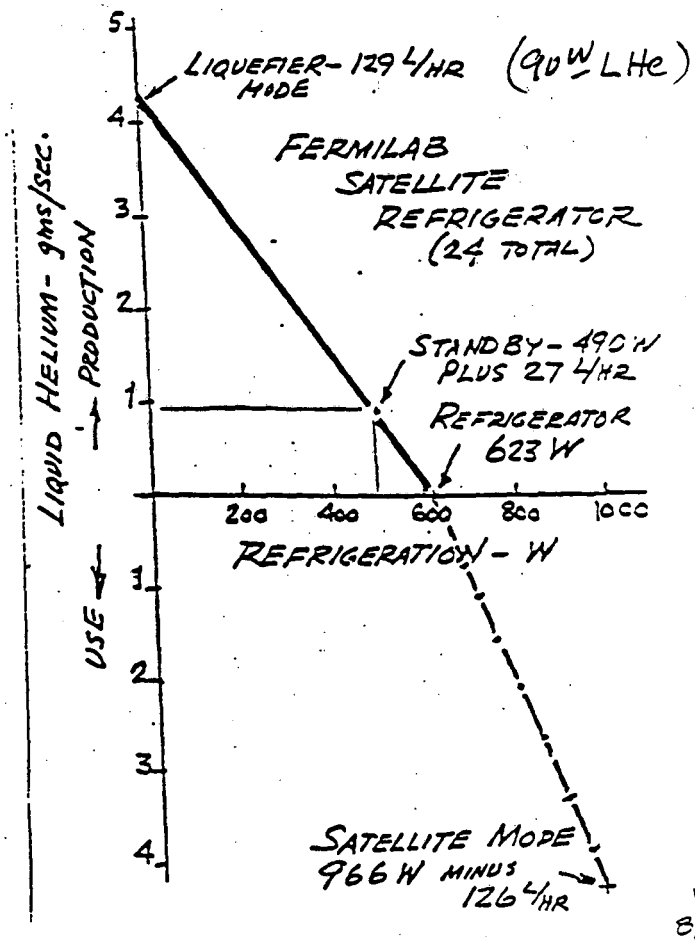

Fig. 2. FERMILAB SATELLITE MODES

RG 8/8

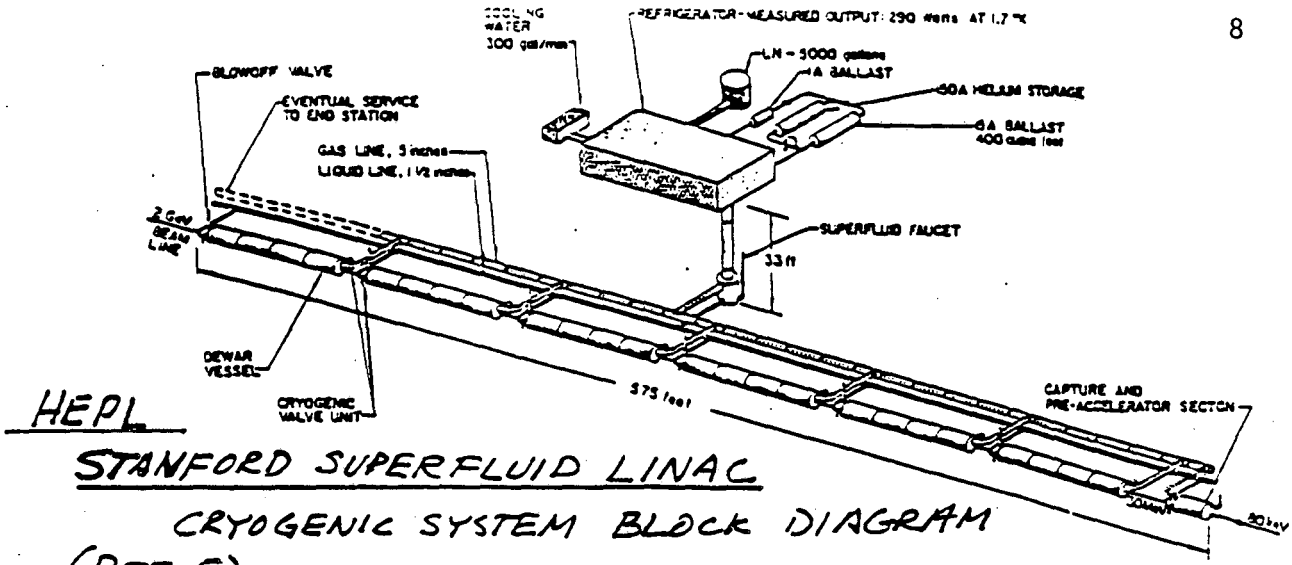

HEPL

STANFORD SUPERFLUID LINAC

CRYOGENIC SYSTEM BLOCK DIAGRAM

(REF. 5)

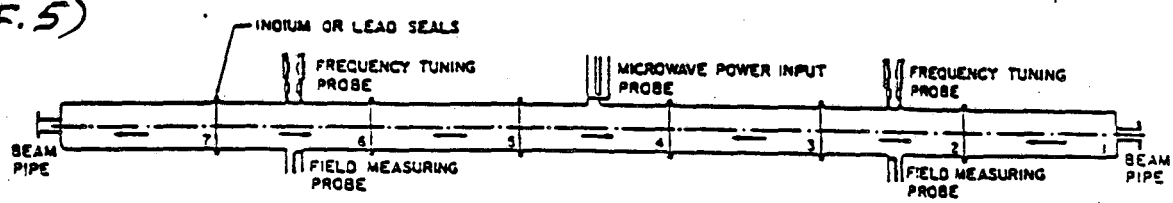

20 FT ACCELERATOR STRUCTURE COMPOSED OF SEVEN 7/2λ SUBSTRUCTURES

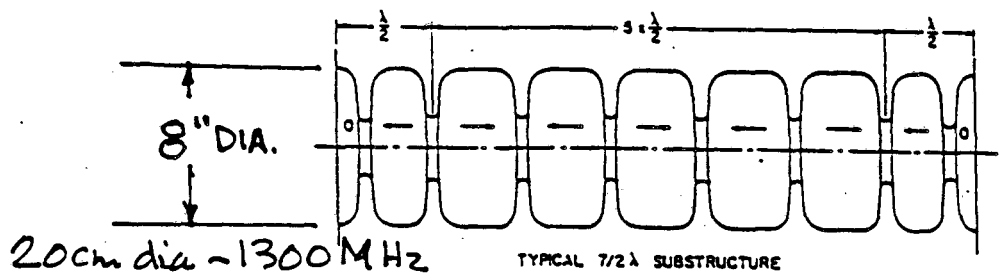

Fig. 5 Schematic of 20-foot accelerator structure and typical 7/2 wavelength (7/2 λ) sub-structures. The arrows show the relative direction of the axial electric field in the 7/2 λ sub-structure and in the individual cells. The cells which are joined by indium or lead seals are unexcited.

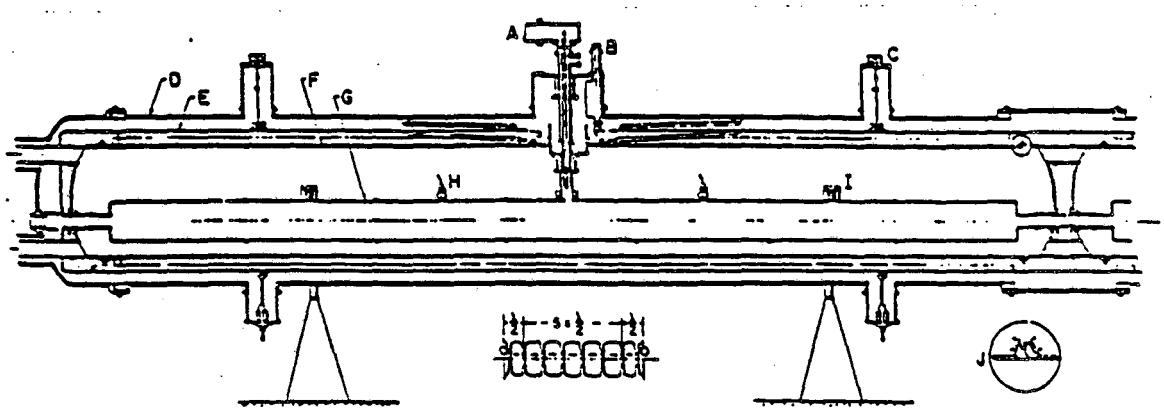

Fig. 3 Assembled 20-foot accelerator dewar module. This section has end caps at one end and is connected to another module at the other end.

~55 Cell/20 FT MODU

A. RF power input.
B. Liquid nitrogen vent.
C. Dewar support and alignment adjustment.
D. Vacuum jacket (36 in. diameter tank).
E. Liquid nitrogen shield.
F. Helium dewar (24 in. diameter tank).
G. Accelerator structure. This is assembled from seven units, one of which is detailed at bottom center.
H. Field sampling probe. (Output to feedback electronics.)
I. Structure tuner.
J. Detail of 2½ in. diameter V-band indium seal.

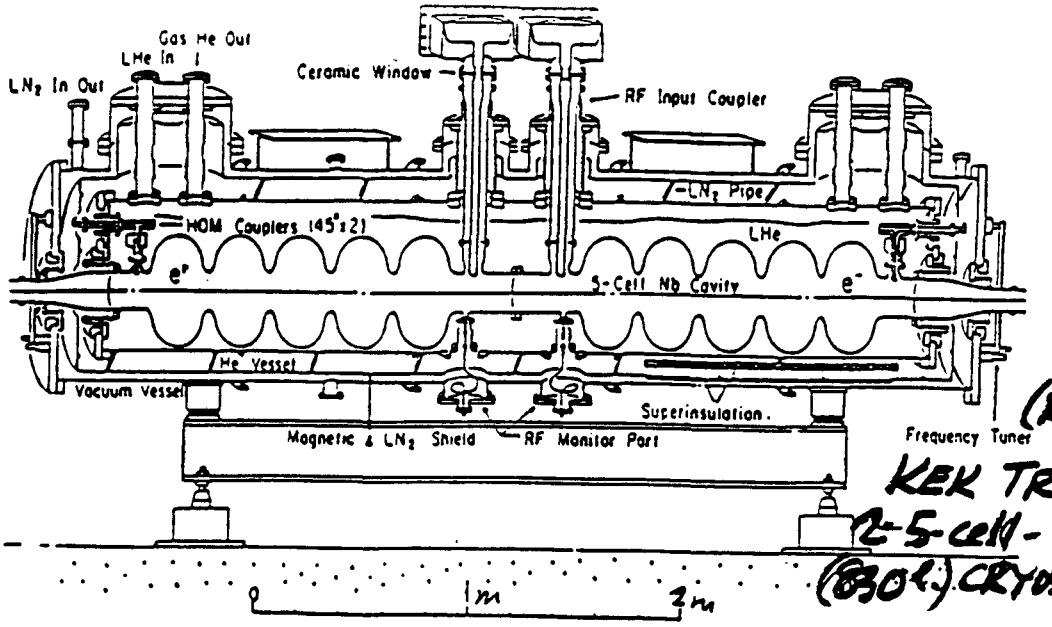

(REF. 11)
KEK TRISTAN
2-5-cell - 508 MHz
(830 l.) CRYOSTAT

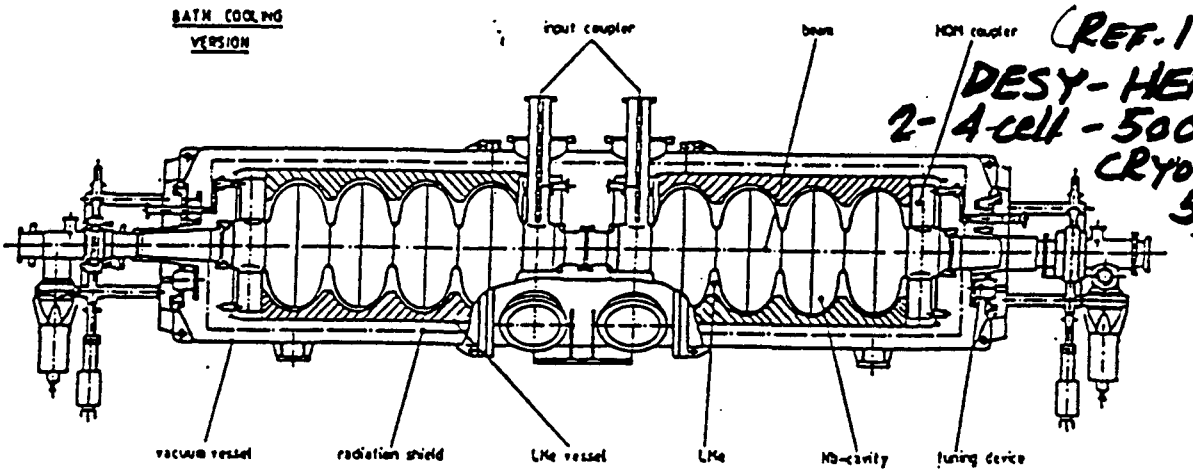

(REF. 17)
DESY-HERA
2-4-cell - 500 MHz
CRYOSTAT
5.2 M.

CERN-LEP 4-4 cell - 350 MHz (REF. 15)
11 meter cryostat

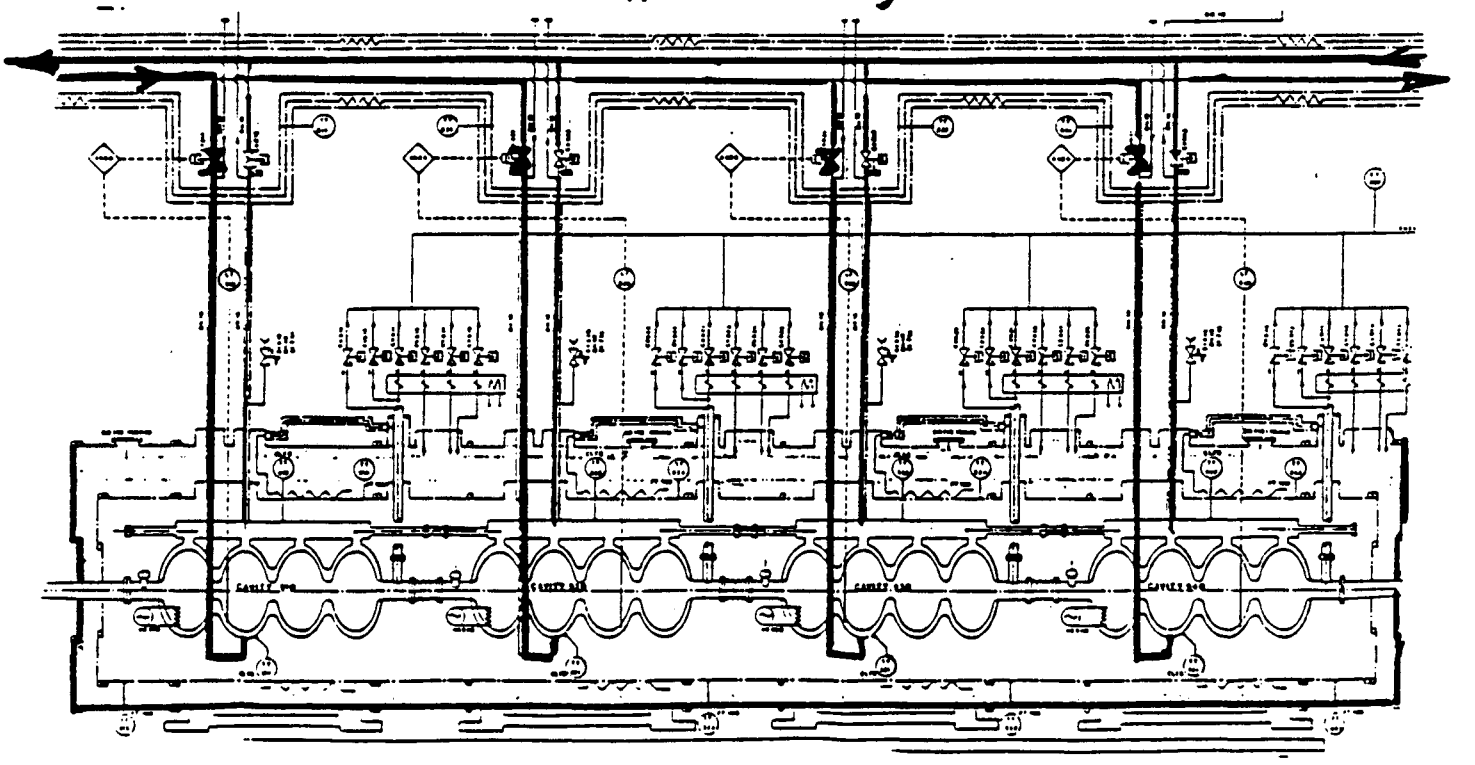

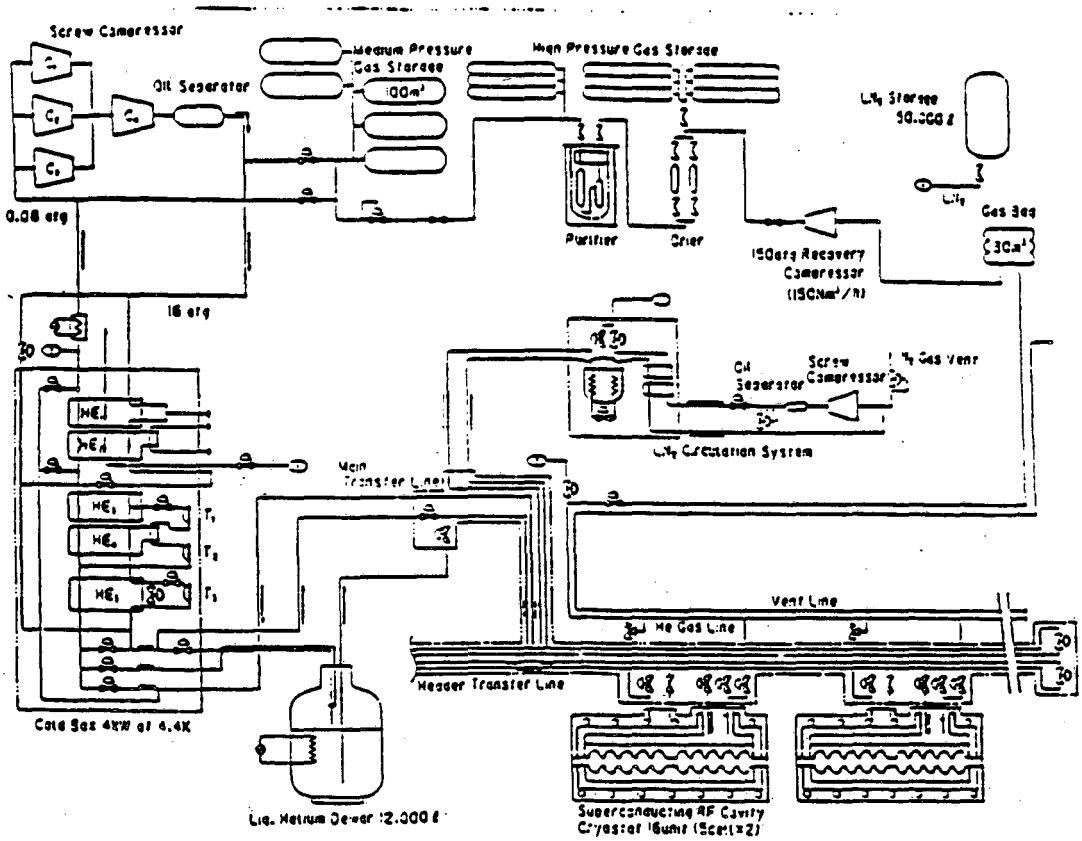

Fig. 1 Schematic diagram of TRISTAN SCC cryogenic system. (REF. 11)

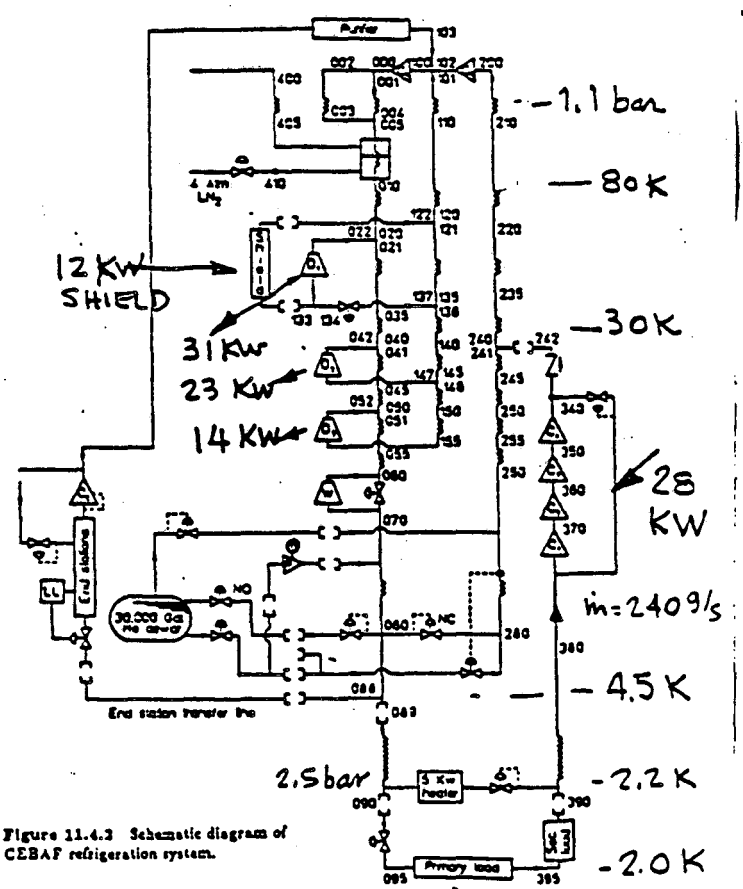

Figure 11.4.2 Schematic diagram of CEBAF refrigeration system.

CEBAF (REF. 10)

4800 W-LOAD.

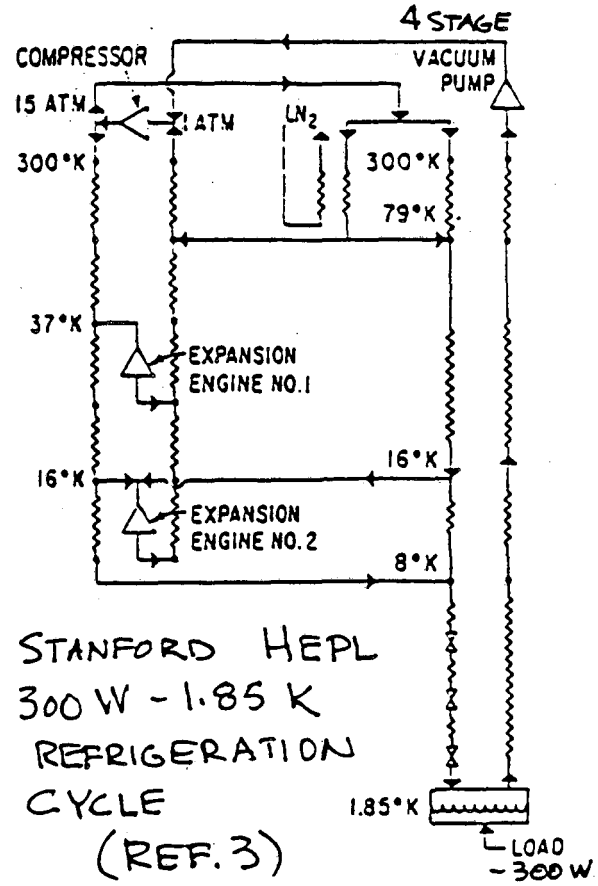

STANFORD HEPL 300 W - 1.85 K REFRIGERATION CYCLE (REF. 3)

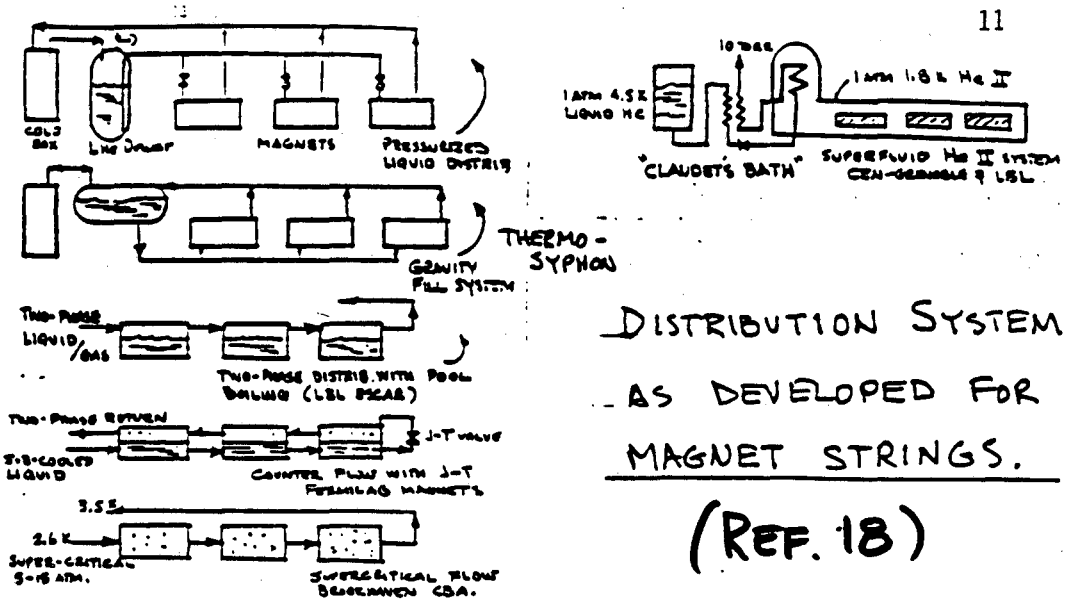

DISTRIBUTION SYSTEMS AS DEVELOPED FOR MAGNET STRINGS.

(REF. 18)

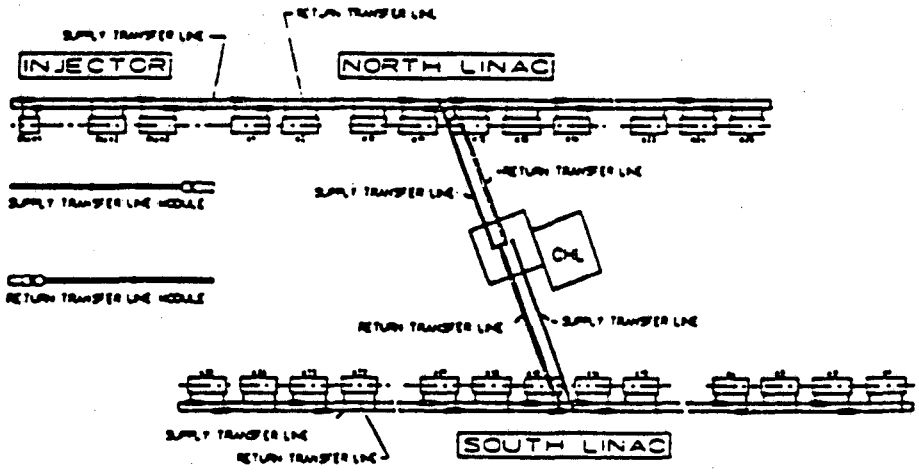

CEBAF Figure 10: Linac Transfer Line Layout (REF 10)

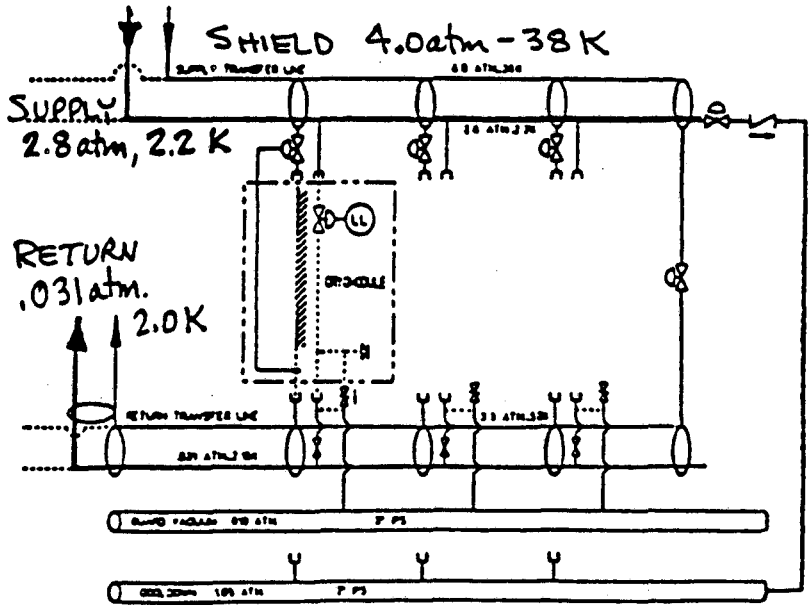

CEBAF Figure 11: Linac Transfer Line Schematic (REF. 10)

This report has been reproduced directly from the best available copy.

LAWRENCE BERKELEY LABORATORY
TECHNICAL INFORMATION DEPARTMENT
1 CYCLOTRON ROAD
BERKELEY, CALIFORNIA 94720