UC-406
LBL-27745

# Lawrence Berkeley Laboratory
UNIVERSITY OF CALIFORNIA

## Engineering Division

To be presented at the American Society of
Mechanical Engineers Winter Annual Meeting,
San Francisco, CA, December 12–17, 1989

# Superconducting Magnets in Space

M.A. Green

August 1989

For Reference

Not to be taken from this room

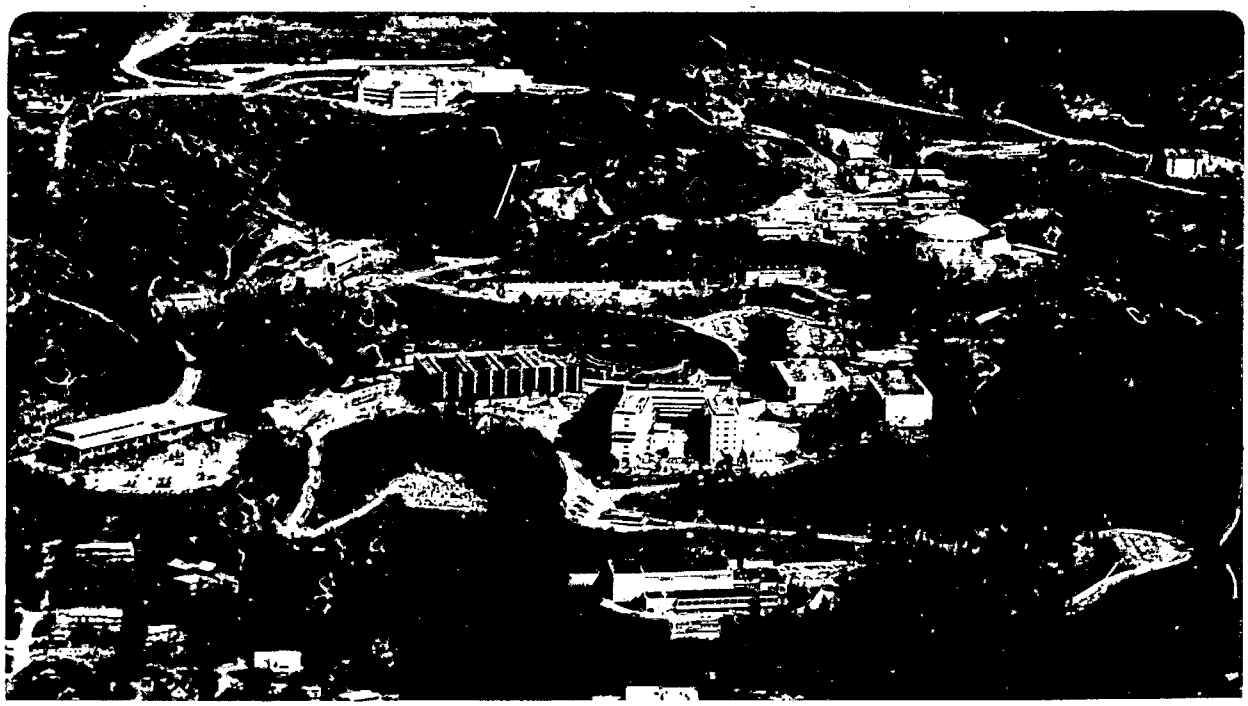

LBL-27745
Copy 1
Bldg. 50 Library.

Prepared for the U.S. Department of Energy under Contract Number DE-AC03-76SF00098.

## DISCLAIMER

This document was prepared as an account of work sponsored by the United States Government. While this document is believed to contain correct information, neither the United States Government nor any agency thereof, nor the Regents of the University of California, nor any of their employees, makes any warranty, express or implied, or assumes any legal responsibility for the accuracy, completeness, or usefulness of any information, apparatus, product, or process disclosed, or represents that its use would not infringe privately owned rights. Reference herein to any specific commercial product, process, or service by its trade name, trademark, manufacturer, or otherwise, does not necessarily constitute or imply its endorsement, recommendation, or favoring by the United States Government or any agency thereof, or the Regents of the University of California. The views and opinions of authors expressed herein do not necessarily state or reflect those of the United States Government or any agency thereof or the Regents of the University of California.

LBL-27745

# Superconducting Magnets in Space

M.A. Green

Engineering Division
Lawrence Berkeley Laboratory
1 Cyclotron Road
Berkeley, California 94720

August 1989

# SUPERCONDUCTING MAGNETS IN SPACE

Michael A. Green
University of California
Lawrence Berkeley Laboratory
Berkeley, CA 94720

## ABSTRACT

Applications for superconducting magnets in space include particle Astrophysics detectors, semiconductor crystal growth, magnetic refrigerators to reach temperatures of a few millikelvin and magnetic energy storage. Superconducting magnets are well suited for use in space because they consume very little power, and superconductors can operate at current densities which are much higher than conventional conductors. This paper presents the general requirements for superconducting magnets in space. The paper discusses the selection of a cryogenic working fluid and the selection of superconductor for space magnets. A 260 mm warm bore 3 T solenoid and the ASTROMAG particle Astrophysics experiment solenoid for the space station are presented as examples of superconducting magnet technology for use in space.

## INTRODUCTION

Superconductivity is well suited for generating large magnetic fields in space provided one can operate these magnets in the persistent mode and adequate refrigeration (stored cryogen) can be provided for the mission. If one wants relatively small regions of relatively low intensity magnetic field (less than 1 T), rare earth permanent magnets are a better choice.

This report describes the limitations and advantages of a space environment in terms of the operation of a superconducting magnet. The limitations of a space environment affect the choice of cryogenic working fluid and the choice of the superconductor which can be used to produce the magnetic field. Two examples are presented in this report to show the types of magnets which could be used in a space environment. These are: 1) a solenoid magnet which could be used inside the space station to generate magnetic fields for semiconductor crystal growing, NMR spectroscopy or magnetic resonance imaging of laboratory animals; 2) a large magnet to provide magnetic fields for particle astrophysics detectors.

## LIMITATIONS OF THE SPACE ENVIRONMENT

A space environment puts a number of constraints on the design of a superconducting magnet there. A partial list of these constraints is as follows:[1]

1) The mass which can be put in orbit is always a limitation. One wants to maximize the magnetic performance while minimizing the weight of the device. The mass of a superconducting magnet and its cryogenic system is proportional to the stored magnetic energy. It is desirable to maximize the stored energy per unit magnet mass.

2) Contrary to popular belief, temperatures in low earth orbit are close to normal room temperature. While specialized coatings on the surface of the space craft can lower the temperatures to about 200 K, other constraints (i.e. the operating limits of electrónics and batteries) generally do not permit one to operate a superconducting magnet in an environment which has a temperature much lower than 300 K. A design external pressure of 1 atm is dictated by launch.

3) In most applications (on the space shuttle or the space station for example), the net magnetic dipole moment must be zero. If the magnetic dipole moment is not zero, torques will be put into the space craft as the magnet tries to orient itself with the earth's magnetic field. The torque generated by the interaction of the dipole moment with earth's field manifests itself as increased fuel usage in thrusters used to control the attitude of the space craft. As a result, magnets are designed with bucking coils (to make the net dipole moment zero) or they are built in the shape of a toroid.

4) The magnet and its cryostat are expected to withstand the launch environment and in many cases the landing environment. This means that the coil and cryostat must withstand accelerations of 10 to 12 gees in any direction, and the mechanical resonant frequency of

the magnet and cryostat support structure should be above 20 Hz in order to avoid magnification of the highest acceleration rates.

5) The magnet and its cryostat should use reliable materials and components. The mechanical thermal and other properties should be known and repeatable. Safety is very important in space, especially if the mission is on a manned space craft. Superconducting magnets should be designed so that they quench in a fail-safe way.

6) Stray magnetic field is a bigger issue in space than it is on earth. Working volume is at a premium on or about a space craft. Stray magnetic fields can adversely affect electronic components or even the motors which operate various parts in an astronauts space suit. It is desirable to minimize the stray field from a superconducting magnet while keeping the magnet and its subsystems as light as possible. The use of iron shields is often precluded by weight limits.

Magnets which are built for use in space have to be built lighter, yet safety concerns have to be met. The only real positive associated with a space environment is that space can be used to provide the vacuum often needed for optimal cryogenic performance for the magnet.

## SELECTION OF A WORKING FLUID AND SUPERCONDUCTOR

Superconducting magnets in space will, for at least the next dozen years, be cooled using a stored cryogenic working fluid. Reliable cryogenic refrigerators for use in space do not exist for temperatures below 100 K. As a result, one wants to select a cryogenic working fluid so that the usage of the working fluid is minimized.

Commercial superconducting magnets (i.e. MRI imaging magnets) are cooled using liquid helium. The dewars have liquid nitrogen shields to reduce the heat leak into the liquid helium tank. In both the liquid helium and liquid nitrogen cooling systems, only the heat of vaporization is used. The sensible heat is only used in cooling the magnet electrical leads. Long life cryogen tank designed for use in space uses both the heat of vaporization and the sensible heat to cool the cryogenic device, its tank and intermediate temperature shields.

Table 1 shows the properties of four different working fluids with a one atmosphere boiling temperature less than 80 K.[2,3] These fluids include helium, hydrogen, neon and nitrogen. It is interesting to note that liquid helium has the lowest heat of vaporization. It is also interesting to note that helium has a large specific heat per unit mass. As a result, the total available refrigeration is high for helium despite its low heat of vaporization. Liquid nitrogen, on the other hand, has a high heat of vaporization and a much lower specific heat than helium. The total available refrigeration from liquid nitrogen is a factor of four lower than for liquid helium. Therefore liquid nitrogen is <u>unsuitable</u> as a coolant for magnets in space. Liquid hydrogen, on the other hand, has a high heat of vaporization and a high specific heat. The total available refrigeration from liquid hydrogen (including the heat of conversion from para to ortho hydrogen) is roughly three times higher than for liquid helium. Liquid neon (which is a nonflammable substitute for hydrogen) has even less total available refrigeration than does liquid nitrogen.

From an available refrigeration standpoint, hydrogen is the coolant of choice per unit mass. The problem with hydrogen is its broad flammability limit, so for applications involving the shuttle or the NASA manned space station hydrogen cannot be used as a coolant. If non-manned expendable rockets are used for launch, liquid or solid hydrogen could be a viable option as a superconducting magnet coolant.

Superfluid helium is the stored cryogen of choice for superconducting magnets on a manned spacecraft. The use of superfluid helium for cooling has a number of important advantages for cooling superconducting magnets in space. These advantages are:

1) A temperature of 1.8 K is easy to maintain in space. The vacuum pumping needed to maintain superfluid helium is provided by space itself.

2) The liquid density is higher for superfluid helium than helium at its 1 atm boiling temperature of 4.2 K. As a result, the tanks can be made somewhat smaller per unit helium mass. Superfluid helium has a higher heat of vaporization, but there is little difference in available total refrigeration between superfluid helium and helium at 4.2 K (about 12 J $g^{-1}$).

3) Complete gas-liquid phase separation can be obtained in a weightless-environment using a porous plug. Taking only helium gas into the shields will reduce overall helium consumption. Superfluid helium an be pumped through the magnet coils using the fountain effect.[4] There are no moving parts in the pump and the heat needed to drive the pump is supplied by heat leaks into the system.

4) The critical current density in the superconductor is higher at 1.8 K than it is at 4.2 K.

Two years ago there would have been no question about selection of superconductor for superconducting magnets in space. At that time the conductor of choice would have been niobium-titanium. The discovery of the new high critical temperature (high $T_c$) superconductors[5] requires one to reevaluate this decision. The pressure for this reevaluation becomes stronger with the discovery of the yttrium-barium class of superconductors which have a zero resistance critical temperature of about 93 K.[6] The important things to note about the new conductors are: 1) The new conductor is a ceramic which is brittle (niobium-titanium is a strong ductile alloy). 2) There is some uncertainty as to what the upper critical field is. It is felt that this is caused by the granular nature of the superconductor. 3) There is the potential for high critical current density, but in bulk sintered samples this conductor cannot carry much transport current. Melted samples and thin film forms of the high $T_c$ superconductors are capable of carrying much higher transport currents than the bulk sintered conductors. 4) The so-called lattice melt temperature above which there is excessive flux creep is much lower than the critical temperature for the high $T_c$ materials.[7] (The best of the really high $T_c$ materials appears to be yttrium-barium copper oxide, YBCO.) At this time, samples of YBCO conductor or the newer bismuth and thallium based materials have not been made in a form which is usable for superconducting magnets like the ASTROMAG magnet.

**Table 1. Properties of Four Liquid Gases That Can Be Used to Cool Superconductor**

| | Helium | Hydrogen | Neon | Nitrogen |
|---|---|---|---|---|
| 1 atm Boiling Temperature (K) | 4.22 | 20.3 | 27.1 | 77.4 |
| Critical Temperature (K) | 5.19 | 33.3 | 44.5 | 126.1 |
| 1 atm Liquid Density (kg $m^{-3}$) | 125 | 70.8 | 1205 | 811 |
| 1 atm Heat of Vaporization ($Jg^{-1}$) | 20.8 | 442[a] | 86.8 | 198 |
| Gas Specific Heat ($Jg^{-1}$ $K^{-1}$) | 5.19 | 14.6 | 1.04 | 1.03 |
| Available Refrigeration Liquid to 300 K ($Jg^{-1}$) | 1561 | 4629[b] | 369 | 431 |
| Design Nucleate Boiling Heat Flux[c] (W $m^{-2}$) | 2500 | 30000 | 50000 | 60000 |
| Design Nucleate Boiling $\Delta T$[c] (K) | 0.5 | 1.7 | 2.4 | 6.8 |

[a] para hydrogen
[b] includes the para to ortho transition energy
[c] about 30 percent of the maximum nucleate boiling heat flux

High $T_c$ superconductors have been shown to be more stable than niobium-titanium (the adiabatic and dynamic stability diameters are larger for the high $T_c$ superconductor operating either liquid hydrogen or liquid nitrogen temperatures), and the energy per unit volume required to initiate a quench is a couple of orders of magnitude higher for the high $T_c$ superconductors.[8,9] The increased stability of the high $T_c$ superconductor is a curse as well as a benefit, because the rate of normal region propagation is much slower (by five to seven orders of magnitude by volume) than for niobium-titanium. Cryostability may be required for magnets which use high $T_c$ superconductor. The highest cryostability current densities can only be achieved in a liquid hydrogen bath.

It can be concluded that high $T_c$ superconductors are not attractive for superconducting magnets in space unless: 1) there is a significant improvement in the ability to carry current without excessive flux creep; 2) the superconductor must be combined with a metal matrix; 3) the intrinsic brittleness problem must be solved; 4) the superconductor probably has to be used in the cryostable mode in a liquid hydrogen bath. In short, the best superconductor to use for superconducting magnets in space is niobium-titanium cooled by superfluid helium.

A hybrid space cryogenic system involving the use of solid hydrogen and superfluid helium would permit one to use conventional superconductors for the magnet, yet retain the superior refrigeration available from the hydrogen. This type of hybrid cryogenic system can only be launched on an expendable launch vehicle. An example of a hybrid cryogenic system is given later in this report.

## A SUPERCONDUCTING MAGNET FOR USE WITHIN THE SPACE STATION LABORATORY MODULE

A superconducting magnet designed to be used inside the laboratory module of the space station must not have a large stray magnetic field. Figure 1 shows a superconducting magnet which has a uniform solenoidal central induction of 3 T. This magnet swallows its own magnetic flux such that the stray field one meter from the magnet center is 10 gauss (0.001 T) or less.[10,11] This feature is very important, because distance cannot be used to protect adjacent equipment from the magnetic flux.

The inner coils (the main coils) produce a uniform field within the 260 mm warm bore of the magnet. The bucking coils (the outer coils which carry current at an opposite polarity of the inner coils) insure that the net dipole moment is zero for the magnet as a whole. In addition, the high multiple moments up to N = 7 are also zero. As a result, the external magnet field falls off as one over the radius to the ninth power.

Table 2 presents the parameters for a superconducting magnet which could be used within the Laboratory module of the space station. The magnet cryostat would be roughly 900 mm long and about 880 mm in diameter. The size of the cryostat, despite the warm bore diameter being only 260 mm, is dictated by the amount of helium needed to insure a long operating life and the space which must be allocated for gas cooled shields and multilayer insulation. The overall mass of the superconducting coils would be approximately 100 kg. About 40 kg of superfluid helium is required in order to insure an operating life for the magnet of one to two years.

The coolant of choice for the Laboratory magnet is superfluid helium at 1.8 K. The helium boil off from the magnet is vented to the outside of the spacecraft. The cooling circuit for the Laboratory magnet is shown in Figure 2. Retractable gas cooled leads are used to carry current into the magnet. During normal magnet operation, the leads are retracted and the magnet operates in the persistent mode. The life time of the magnet shown in Figure 1 is very much dictated by the number of charges and discharges which occur. (Each magnet charge or discharge uses about 60 g of liquid helium.)

Figure 1

A SUPERCONDUCTING MAGNET FOR SHIRT SLEEVE EXPERIMENTS ON THE SPACE STATION

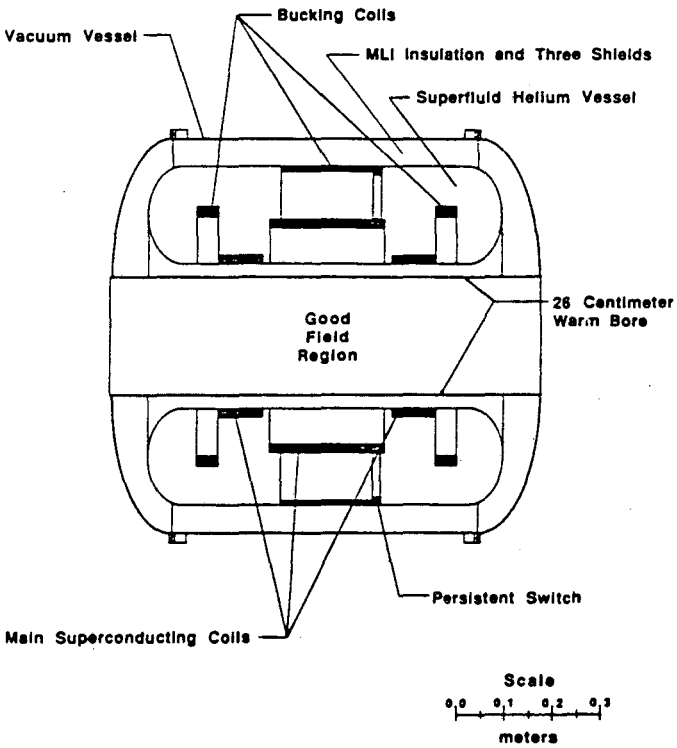


Table 2

## PARAMETERS FOR A 3 TESLA SUPERCONDUCTING EXPERIMENT MAGNET FOR THE SPACE STATION

| PARAMETER | |
|---|---|
| Central Magnetic Induction (T) | 3.00 |
| Good Field Length (mm) | 160.0 |
| Good Field Diameter (mm) | 160.0 |
| Warm Bore Diameter (mm) | 260.0 |
| Magnet Overall Length (mm) | 900.0 |
| Magnet Overall Diameter (mm) | 880.0 |
| Number of Coils | 8 |
| Number of Magnet Turns | 22880 |
| Magnet Self Inductance (H) | 44.9 |
| Magnet Design Current (A) | 154.0 |
| Magnet Stored Energy (kJ) | 532.2 |
| Matrix Current Density (A/sq mm) | 600 |
| Winding Peak Induction (T) | 4.95 |
| Maximum 10 Gauss Distance (m) | 1.11 |
| Type of Superconductor | Nb-Ti |
| Matrix Material | Copper |

Figure 2

SMALL MAGNET CRYOGENIC SYSTEM
SINGLE ALL HELIUM FLOW CIRCUIT
During Normal Operation at 1.8 K

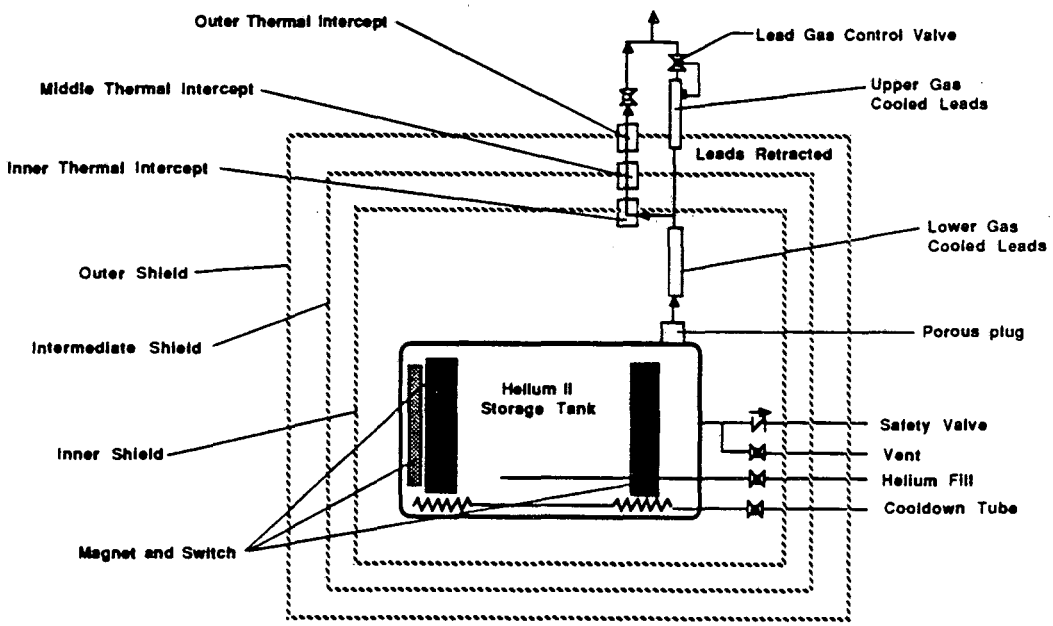

Figure 3

## BASELINE ASTROMAG MAGNET AND CRYOSTAT

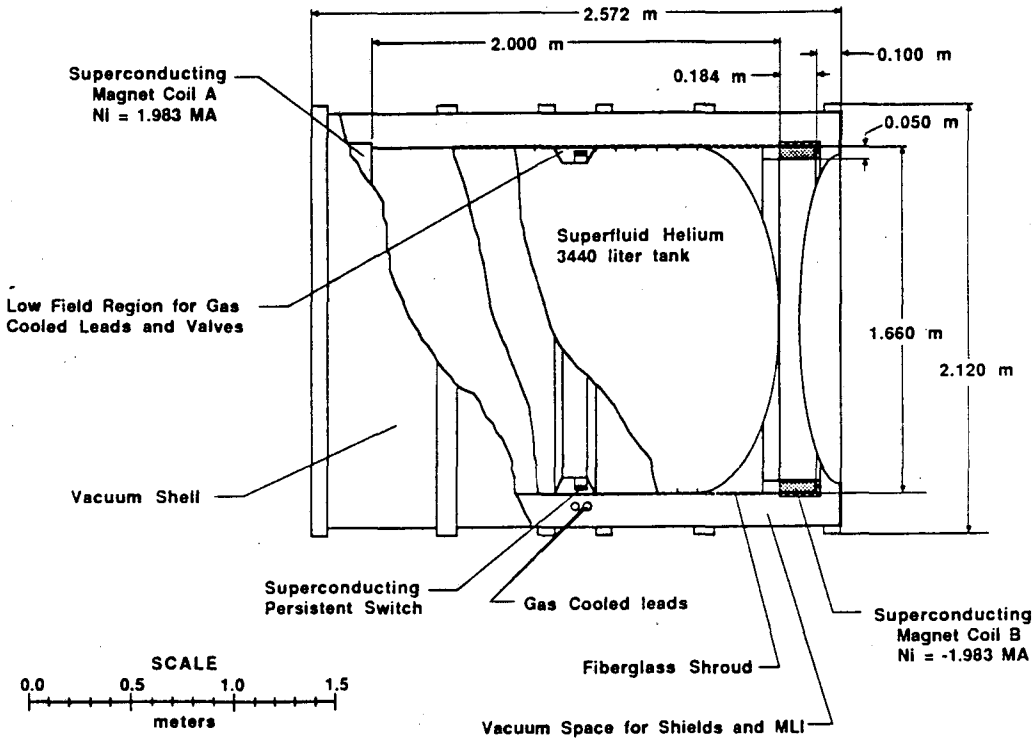


## THE ASTROMAG SUPERCONDUCTING COIL

The strawman configuration for ASTROMAG is two solenoidal coils which are operated at opposite polarity so that the net magnetic dipole moment is zero. This configuration was studied in the early 1970's for the HEAO experiment.[12] The difference between the HEAO experiment and the strawman ASTROMAG configuration is that the ASTROMAG superconducting coils are to be located outside of the helium tank. Placing the superconducting coils outside of the helium tank permits one to move the coil as close as possible to the physics detectors. In addition, coils outside the tank can be decoupled thermally from the helium tank during a magnet quench. Helium from the tank is pumped to the coils and the persistent switch using a superfluid thermomechanical (fountain effect) helium pump.[13]

Figure 3 shows the base line configuration for the ASTROMAG magnet coil and cryostat. The coils operate at opposite polarity so that the net dipole moment is zero. The cylindrical helium tank provides helium to operate the ASTROMAG magnet for up to 4 years. Figure 4 shows a copper based superconductor magnet coil cross section. The table attached to Figure 4 presents the basic parameters of the ASTROMAG base line magnet. The magnet coils and persistent switch have a mass of 650 kg. The design stored energy for the base line magnet is 11 MJ. (The mass of the coils, cryostat and coolant is proportional to stored magnetic energy.) The 251 kN magnetic tensile force between the coil is carried by a fiberglass epoxy shroud which connects to the helium tank.

Figure 4

## COPPER BASELINE SUPERCONDUCTING COIL

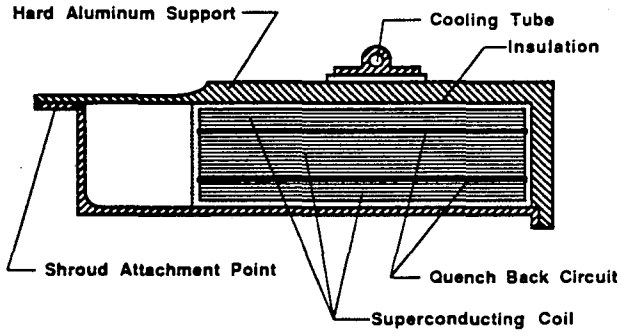


### COPPER BASELINE MAGNET PARAMETERS

| | |
|---|---|
| Number of Magnet Coils | 2 |
| Number of S/C Layers per Coil | 34 |
| Number of QB Layers per Coil | 4 |
| Number of Turns per Layer | 72 |
| Number of S/C turns per Coil | 2448 |
| Number of QB turns per coil | 288 |
| Coil Outside Diameter (m) | 1.66 |
| Coil Inside Diameter (m) | 1.56 |
| Space Between the Coils (m) | 2.00 |
| Coil Width (mm) | 184.00 |
| Magnet Self Inductance (H) | 33.52 |
| 11 MJ Design Current (A) | 810.09 |
| Coil Peak Induction (T)* | 6.74 |
| Intercoil Tensile Force (kN)* | 251# |
| S/C Matrix Current Density (A/ sq mm)* | 405 |
| Quench Energy at 1.8 K (micro-joules) | 9.6 |

* At the 11 MJ Design Coil Current
\# 25.6 metric tons

The coils use multi-filamentary niobium titanium. The superconductor is in a copper matrix with a copper to superconductor ratio of about 1.5 to 1. The filament diameter in both cases is less than 30 microns. The matrix resistivity at 1.8 K is designed to be about $10^{-9}$ ohm meters at 7 T. The niobium titanium critical current density is set at 2500 A $mm^{-2}$ at 4.2 K and 5 T. Reducing the temperature at 1.8 K improves critical current density. The niobium titanium superconductor proposed is entirely within the state of the art. At design current and temperature, the magnet will be operating at less than 50 percent of its critical current.

The schematic diagram for the all helium cryogenic system for the ASTROMAG superconducting magnet is shown in Figure 5. Some of the cold valves, cold burst discs and the crossover plumbing associated with ground operations and shuttle safety requirements have been omitted to provide a clear picture of the basic cryogenic system. Figure 5 shows a thermomechanical helium II pump for circulating superfluid helium through the superconducting coils and the persistent switch. The pump developed and tested by Hofmann[14] uses an extra heat exchanger to heat the downstream side of the porous plug. The Hofmann type pump can pump up to 3 $gs^{-1}$ using the fountain effect which is driven by heat deposited on the piece to be cooled.

The shield cooling concept shown in Figure 5 is similar to the HEAO[12] concept of the early 1970's. In addition, gas cooled leads must operate off of the helium tank. The helium for the leads can be pumped through the leads using the fountain effect pump which circulates helium through the coils and persistent switch. The proposed leads are enhanced heat transfer leads which can be operated at any orientation within the cryostat vacuum.[15] The four year cryostat lifetime includes an allowance for four coil charges and discharges per year and a decay of the coil energy of one percent per year.

The cryogenic system shown in Figure 5 is designed so that the magnet coils can be cooled down, from the storage tank, in the event of a quench. About 50 kg of helium is required to recover from a magnet quench when the stored energy is 11 MJ. The coils, persistent switch and the tank can be cooled down from room temperature using liquid helium pumped from a large external storage tank on the ground. The proposed cryogenic system for ASTROMAG will permit the helium storage tank to be refilled periodically (about every 3 years) by a tanker brought up from earth. This concept is scheduled to be tested by the SHOOT experiment sometime in 1991 or 1992.[4] The use of orbital transfer of helium will permit the ASTROMAG experiment to operate on the space station for many years.

The time between helium refills can be extended to six years by the use of 100-120 K refrigerators to cool the outer shield of the cryostat. A second approach to reducing helium consumption is a hybrid cryogenic system where the heat is intercepted by a boiling or subliming cryogen at its boiling or sublimation point. From Table 1, it is clear that the only cryogen which makes sense as a second fluid is hydrogen in either liquid or solid form.

Two problems must be considered when one looks at the hybrid hydrogen-helium cryogenic system for ASTROMAG. The first problem is the extreme flammability of hydrogen. (Under current safety regulations, the use of hydrogen is prohibited on the shuttle or the space station. If ASTROMAG were launched by an expendable launch vehicle and the experiment were a freeflying experiment, the hybrid cryogenic system would be attractive if the weight of the extra tankage was less than the liquid cryogen saved from the all helium system.) The second problem is design of this tankage and the phase separation of the hydrogen being used to cool the shields and intercepts. Both of these

Figure 5

**ASTROMAG MAGNET CRYOGENIC SYSTEM**
**SINGLE ALL HELIUM FLOW CIRCUIT**
**During Normal Operation at 1.8 K**

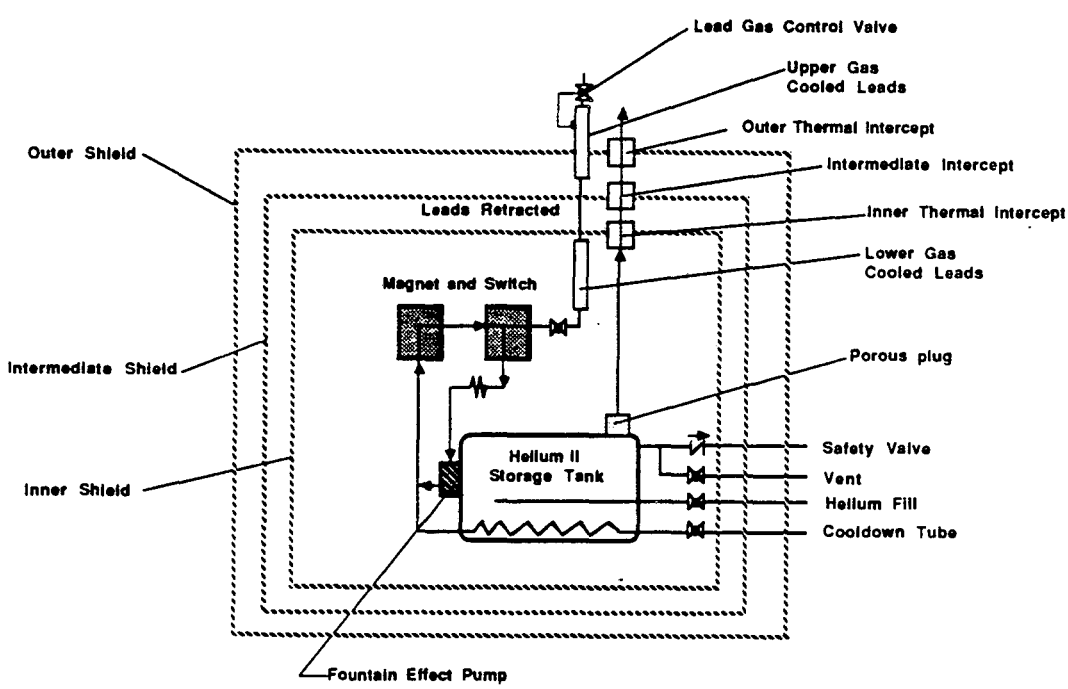

problems can be solved by using solid hydrogen as a coolant and a liquid normal helium tank to keep the solid hydrogen frozen on the ground so that there is no hydrogen gas emissions during ground operations or launch.

Figure 6 shows a schematic of a hybrid cryogenic system using solid hydrogen (at 13 K). The gas from the hydrogen evaporation is used to cool the outer shields and cold mass support intercepts. The inner shield and support intercept is attached directly to the hydrogen tank. The heat leak into the hydrogen increases to about 0.65 W because the outer shields and cold mass support intercept points will run hotter (the ratio of sensible heat to latent heat is 9.5 for hydrogen compared to about 68 for superfluid helium). Even with a heat input to the hydrogen tank of 0.65 W, the mass flow of hydrogen through the shields would only be 0.00136 $gs^{-1}$ (compared to 0.0038 $gs^{-1}$ for an all helium cryogenic system). Helium consumption when when the magnet is operating in the persistent mode would be reduced about a factor of twenty as compared to an all helium cryogenic system. Magnet charging and discharging four times a year is expected to consume 7-8 kg per year of helium as in the all helium cryogenic system. (One might argue that a free flying ASTROMAG does not have to be charged and discharged four times a year.)

The two hydrogen cooled shield hybrid cryostat shown in Figure 6 can be designed with a lifetime approaching six years. It is estimated that the hybrid cryostat would consume about 80 kg of superfluid helium and about 260 kg of solid hydrogen over the six year period. (The addition of a third hydrogen cooled shield will increase the lifetime to 8 years provided the number of magnet charges is limited to 24.) Figure 7 shows a hybrid cryostat ASTROMAG with a superfluid cylindrical helium dewar inside of an annular solid hydrogen cryostat. The small normal (1 atm) helium I tank for launch and ground hold is also shown. The coil outside diameter and coil separation in Figure 7 is the same as the base line ASTROMAG design shown in Figure 3. The hybrid cryostat with its coils is estimated to have the same mass and dimensions as the all helium cryostat system.

## ACKNOWLEDGMENTS

The author would like to thank J.F. Ormes and G.F. Smoot for their comments on the ASTROMAG magnet system. The author also acknowledges the fruitful discussions he has had with S. Castles and A. Hofmann on fountain effect superfluid helium pumping systems.

The work was supported by the Office of Astrophysics, NASA and the Office of Basic Energy Science, U.S. Department of Energy, under Contract No. DE-AC03-76SF00098.

## REFERENCES

1. M.A. Green, et al., IEEE Transactions on Magnetics MAG-23, No. 2, p. 1240 (1987).

2. V.J. Johnson, The WADD Compendium, Pergamon Press, New York (1961).

3. E.G. Birentari and R.V. Smith, Advances in Cryogenic Engineering 10, p. 325, Plenum Press, New York (1964).

4. M.D. Pirro and S. Castles, Cryogenics 26, No. 2, p. 84 (1986).

5. J.G. Bednorz and K.A. Muller, Z. Phys. B 64, p. 189 (1986).

6. M. K. Wu, et al., "Superconductivity at 95 K in a Mixed Phase Y-Ba-Cu-O Compound System at Ambient Pressure", Phys. Rev. Letter 58, p. 908 (1987).

7. R. Pool, "Superconductivity: Is the Party Over?", Science 244, p. 914 (May 1989).

8. E.N. Collings, "Flux Jump Stability and Cryogenic Stability for Superconductor for 80 K". Proceedings of the MRS International Meeting on Advanced Materials (Tokyo, May-June 1988).

9. M.A. Green, "High $T_c$ Superconductor and its Use in Superconducting Magnets", LBL-23946 (1988).

10. T.S. Smith, M.S. McAshan, W.M. Fairbank, U.S. Patent 4595899, June 17, 1986.

11. M.A. Green, "A Large Superconducting Detector Magnet Without an Iron Return Path", Proceedings of the IISSC Conference, New Orleans, LA, 9-10 February 1989, to be published by Plenum Press, New York.

12. W.L. Pope, et al., Advances in Cryogenic Engineering 20, p. 47 (1974).

13. M.A. Green and S. Castles, Advances in Cryogenic Engineering 33, p. 631, Plenum Press, New York (1987).

14. A. Hofmann, et al., Advances in Cryogenic Engineering 33, p. 471, Plenum Press, New York (1987).

15. R.G. Smits, et al., Advances in Cryogenic Engineering 27, p. 169, Plenum Press, New York (1981).

Figure 6

## ASTROMAG MAGNET CRYOGENIC SYSTEM
## HYBRID SYSTEM WITH HYDROGEN COOLED SHIELDS
### During Normal Operation at 1.8 K

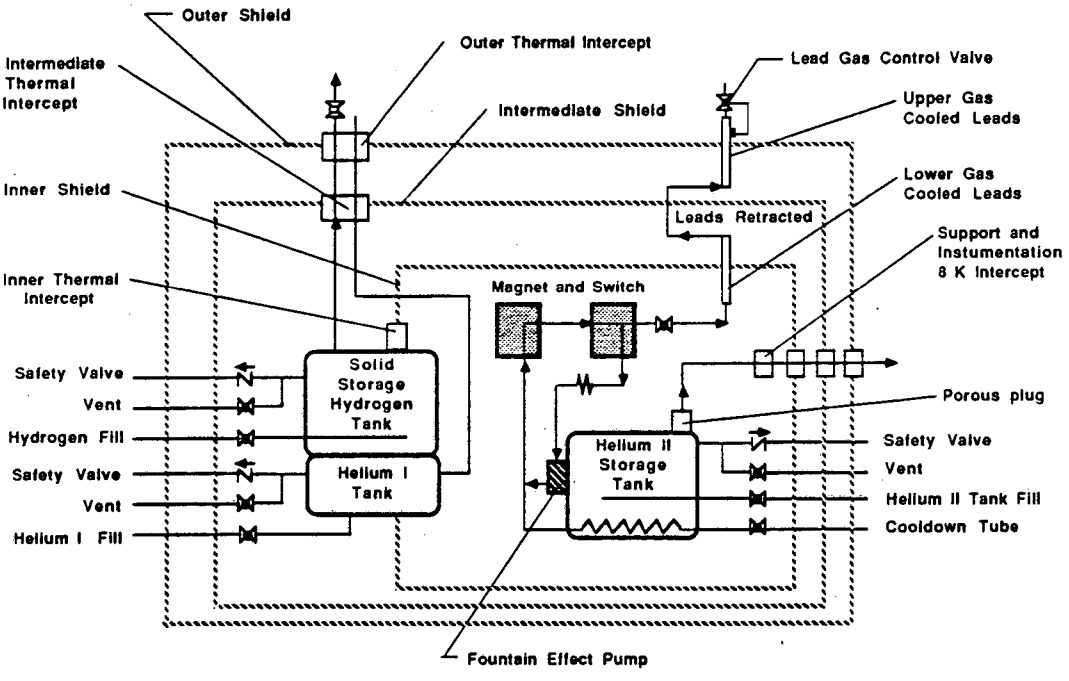


Figure 7

## HYBRID ASTROMAG MAGNET AND CRYOSTAT

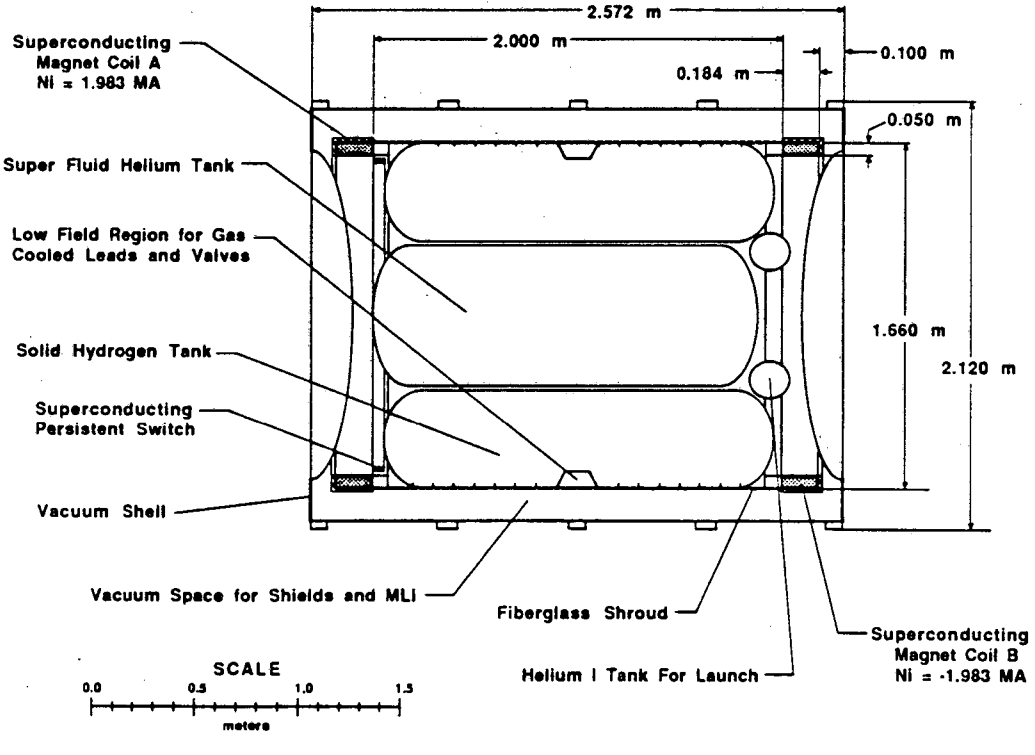

*LAWRENCE BERKELEY LABORATORY*
*TECHNICAL INFORMATION DEPARTMENT*
*UNIVERSITY OF CALIFORNIA*
*BERKELEY, CALIFORNIA 94720*