UC-406

LBL-27812

Lawrence Berkeley Laboratory

UNIVERSITY OF CALIFORNIA

Accelerator & Fusion Research Division

Presented at the 6th National Conference on
Synchrotron Radiation Instrumentation,
Berkeley, CA, August 7–10, 1989, and
to be published in the Proceedings

Stability against Temperature Variations at the ALS

T. Warwick, T. Swain, and A. Jackson

August 1989

For Reference

Not to be taken from this room

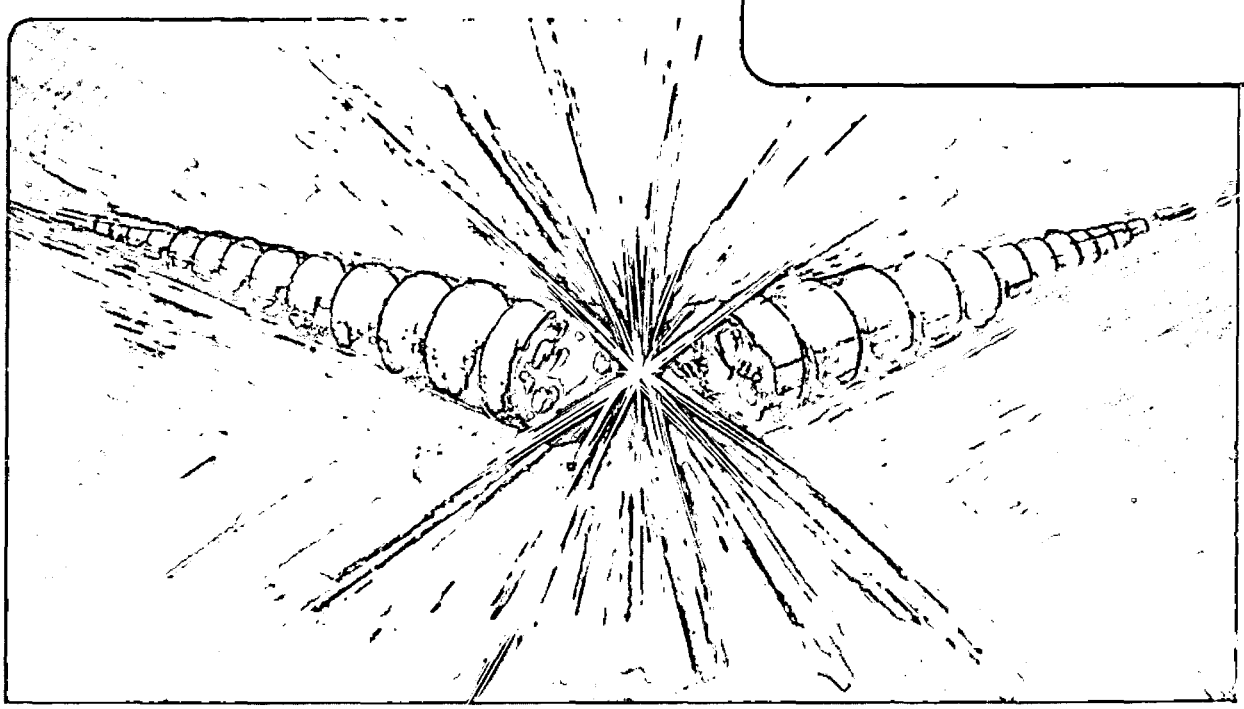

LBL-27812
Copy 1
Bldg. 50 Library.

Prepared for the U.S. Department of Energy under Contract Number DE-AC03-76SF00098.

DISCLAIMER

This document was prepared as an account of work sponsored by the United States Government. While this document is believed to contain correct information, neither the United States Government nor any agency thereof, nor the Regents of the University of California, nor any of their employees, makes any warranty, express or implied, or assumes any legal responsibility for the accuracy, completeness, or usefulness of any information, apparatus, product, or process disclosed, or represents that its use would not infringe privately owned rights. Reference herein to any specific commercial product, process, or service by its trade name, trademark, manufacturer, or otherwise, does not necessarily constitute or imply its endorsement, recommendation, or favoring by the United States Government or any agency thereof, or the Regents of the University of California. The views and opinions of authors expressed herein do not necessarily state or reflect those of the United States Government or any agency thereof or the Regents of the University of California.

STABILITY AGAINST TEMPERATURE VARIATIONS AT THE ALS*

Tony WARWICK, Tom SWAIN and Alan JACKSON

Lawrence Berkeley Laboratory, Berkeley, CA94720, USA

We have studied the effects of temperature fluctuations on the Advanced Light Source (ALS). By modeling the storage ring support structure, we find that fluctuations of +/-2 to 3 °C in the tunnel will cause photon beam motion of the order of the beam size. Temperature stabilization at this level will allow the residual motion of the photon beams to be reduced by a second level of active feedback, operating on signals from photon beam position monitors. Air temperature in the experimental area and the temperature of cooling water serving the beamlines should be constant to +/-1 °C. This will provide a suitable environment for experiments.

1. Introduction

The ALS is a third generation synchrotron radiation source, based on an electron storage ring, designed to produce extremely bright photon beams in the VUV and soft Xray region of the electromagnetic spectrum [1]. The high brightness arises as a direct consequence of the small emittance of the circulating electron beam in the ALS. In order to exploit the high brightness it is necessary to maintain the stability of the electron beam, and the stability of the optical elements that transport the photon beam to the sample, to very high precision.

A thermally stable environment is essential to minimize thermal motion of experimental equipment on the photon beamlines. Foci, pinholes and slits will have sizes of the order of 10μm so that thermal expansion effects must be carefully controlled.

Active feedback systems, which correct measured motions of the electron and photon beams, are now under development at most existing facilities. These will also be important at the ALS. However, in this facility the photon beams are brighter and the stability requirements are more stringent than

*This work was supported by the Director, Office of Energy Research, Office of Basic Energy Sciences, Material Sciences Division, U.S. Department of Energy under Contract DE-AC03-76SF00098.

ever before. There will be a large number of photon beam lines, intended to operate independently, and many stabilization feedback loops are planned. A stable thermal environment is essential before the multiple feedback systems can operate effectively on the storage ring. Firstly, because the thermal motion to be stabilized must be reduced to the point that each feedback system can be activated and deactivated without affecting the rest of the facility. Secondly, because the feedback systems involve measurements of the photon beam position at the micron level and thermal motion of the photon monitors must be avoided.

2. Photon beam stability requirements

In specifying the stability requirements we must discuss changes of sensitive parameters (photon throughput, wavelength, position, etc.) over a given time. Thermal variations take place on time scales ranging from a few seconds (e.g. cooling water temperature fluctuations) to several hours (e.g. warming of structural supports), and this report is concerned with stabilizing beam motion over these periods.

On a longer time scale, stability over a period of 24 hours is sufficient time for fine adjustment of optical instrumentation, followed by an extended period of data taking. The facility should therefore be stable from fill to fill and from day to night. Beyond a 24 hour time period, additional effects such as building settlement and redistribution of mechanical and thermal loads become important. There will be no attempt to maintain the stringent stability specifications, outlined below, for longer than 24 hours.

These stability specifications also apply at higher frequencies, where mechanical and electrical oscillations may cause the electron beam to move in the storage ring. Efforts are under way to minimize the sources of such oscillations, but are not discussed here. Furthermore the feedback systems which will form the second layer of stabilization against thermal effects will also be effective at higher frequencies, up to tens of Hz.

Measuring the flux of photons incident on VUV and soft Xray experiments with sufficient precision to normalize against unpredictable throughput fluctuations has proved extremely difficult at all existing synchrotron radiation facilities. Incidence flux monitors can be non-linear, can have time constants different from the main detector, they can be misled by motion of the beam and can be prone to contamination. In some experiments, for example when a zone plate is used to create a demagnified image on a sample, there is simply no space for an incident flux monitor between the last optical element and the sample. Throughput stability is therefore extremely important. When spectra are being accumulated by scanning the wavelength of the incident photons, throughput variations give false features

in the spectra. If we consider a photon beam, with a Gaussian profile, incident on slits of width 2σ, a change in beam position of 10% of σ results in a change in throughput of 0.4%. This figure is typical of the stability requested by the prospective ALS users most sensitive to throughput variations. Users at NSLS [2] have also requested that beams be stable to 10% of σ.

Scanning Xray microscopy requires the formation of a tightly focussed image of the source, to be held stationary while a sample is scanned. The image is then formed as the transmitted intensity varies. If the specification of stability of the source position within 10% of σ is achieved there will be negligible distortion of the micrograph due to beam motion. The use of over-filled zone plate lenses to achieve the focussing in these experiments also requires the photon beam angles to be stationary within 10% of σ to maintain uniform illumination of the lens.

In some monochromator designs, which use the electron beam as a photon source, instead of an image on an entrance slit, source motion gives rise to a wavelength shift of the monochromatic light. If high resolution is to be achieved the source should move by only a fraction of σ.

An appropriate goal at the ALS is therefore that the photon beams be held stationary in position and angle to within +/-10% of their r.m.s. size or angular spread on a time scale of the order of 24 hours.

In the ALS straight sections the r.m.s. electron beam size will be $\sigma_h = 330\ \mu m$, $\sigma_v = 63\ \mu m$. The positional stability requirements then translate into an electron beam stability of +/-33 μm horizontally, +/-6 μm vertically; extremely tight tolerances indeed.

3. How Temperature variations affect the performance of the ALS

Over a 24 hour time period the thermal environment within the ALS facility will be affected by external sources. These include changes in the local air temperature, and direct solar heating. Internal sources can also be important; operation of electrical equipment, particularly the bake-out of vacuum systems, represent significant, and intermittent, thermal loads. Without regulation, one may expect temperature variations of the order of 10 or 15 °C.

It is not possible to consider all of the effects of temperature variations. We consider several examples of the most important effects in this section and it is clear that a 10 °C variation would be disastrous. It would disrupt the alignment of optical equipment on the beamlines, move the electron beam and the photon beams by hundreds of microns and prevent successful operation of active correction schemes. By calculating the effects of smaller temperature changes we can see that air and cooling water temperature

stability of +/-1 °C in the experimental area establishes the thermal environment needed by experiments. Temperature stability of +/-2 to 3 °C in the storage ring tunnel reduces motion of the electron beam to the point that photon position monitors and active feedback systems can operate effectively to reduce the residual motion to the required level of 10% of σ.

In the following we consider the sensitivity of various parts of the facility to thermal fluctuations.

3.1. Floor slab

The ALS storage ring and the beamlines will rest on a new concrete floor which has been designed using conventional civil engineering techniques and after consultation with the NSLS engineers at Brookhaven. Settlement may give rise to differential motion of the floor slab by a few microns across the facility on a 24 hour time scale during the first year of the life of the building [3]. Although this motion is not negligible, it is unlikely to be a major problem. The building load is transmitted to support piers through the floor, wind loads and thermal changes of the building are not expected to affect the floor. We estimate that temperature variations in the interior building air above the floor of 1 °C over 24 hours will propagate about 24 cm into the slab [4]. The resulting vertical motion due to thermal expansion will be less than 1μm, which is negligible. We expect negligible buckling under these conditions. Thermal variations of the floor are therefore not a concern on a 24 hour time scale. The floor provides the frame to which other motions will be referred.

3.2. Storage ring components in the ring tunnel

The magnets and vacuum chamber on the support girder for one of the 12 arcs of the storage ring are shown in figure 1. We are concerned here with motion and distortion of this assembly as small changes are made in the temperature of the air or the cooling water.

A finite element analysis of the thermal and mechanical properties of this structure has been performed using ANSYS [5]. Figure 1 shows the assembly of elements used to model the girder, vacuum chamber and magnets. In the model, heat is supplied from source points at fixed temperatures, representing the water cooled magnet coils and the water cooled beamline blank flanges, which are exposed to synchrotron radiation. Heat is coupled into the body of the magnets so that their surface temperatures are consistent with measurements made during tests of the prototype bending magnet. The thermal conductivity of the magnet support legs was measured. Heat is coupled into the aluminum vacuum chamber from the magnet coils and from the photon beamline blank flanges. The whole structure cools

convectively to the surrounding air.

In order to reduce the temperature gradients in the support girder, we model this object surrounded by 2 inches of thermal insulation, which is included in the girder design. This provides a large thermal time constant for the girder of 19 hours, reducing its susceptibility to rapid fluctuations. ANSYS is used to compute the steady state temperature distributions and the corresponding mechanical displacements. The thermal inertia of the structure is large, with time constants ranging from 1 to 19 hours. The calculated displacements represent an upper limit on motion over 24 hours.

The model has two boundary conditions, the temperature of the cooling water and the temperature of the surrounding air. By varying these parameters we can obtain estimates of the motion of magnets and electron beam position monitors attached to the vacuum chamber. Subsequent calculations using the orbit tracking code TRACY [6] show the response of the closed orbit in the storage ring.

3.2.1. Motion when magnets are first energized

Assuming the air temperature to be 20 °C and the cooling water inlet temperature to be 25 °C, and knowing the power dissipation and water flow rate in each magnet when energized for 1.5 GeV electrons, we calculate the motion of magnets, electron beam position monitors and the electron closed orbit from their positions at a uniform temperature of 20 °C. Figure 2 shows the results. These magnet motions are less than the alignment tolerances. The electron beam position monitor motions are larger than their intrinsic resolution. The closed orbit distortion could be partially removed by a static closed orbit correction using position information from these electron monitors.

3.2.2. Sensitivity to air temperature

By comparing the previous case to a new ANSYS computation with 21 °C air temperature, we can obtain the magnet, monitor and orbit motions corresponding to 1 °C rise in the air temperature. Figure 3 shows the results. These motions are similar to the effects of a uniform increase in temperature of all components by 1 °C. The closed orbit moves by about 1/4 of the r.m.s. beam size or divergence both horizontally and vertically. This exceeds the stability specifications established in section 2.

3.2.3. Sensitivity to cooling water temperature

Sensitivity to water temperature can be estimated by performing an ANSYS computation with 26 °C water temperature and comparing the motions

to the original calculation. Figure 4 shows the results. The closed orbit motions are less than 10% of the r.m.s. beam size or divergence in this case.

3.2.4. Sensitivity to air temperature gradient around the storage ring

Since the structure is most sensitive to air temperature changes, we have performed TRACY closed orbit calculations for an increase of 1/6 °C from arc to arc around half of the ring (six arcs), then decreasing by 1/6 °C from arc to arc around the other half. The closed orbit distortions follow the temperature gradient, there are no large excursions. Figure 5 shows this result.

3.3. Beamlines

Temperature stabilization on the experimental floor is essential to maintain the alignment of high precision optical equipment. Stabilizing the air temperature to +/-1 °C, and adding thermal ballast if necessary, will reduce thermal motion of beam line components (mirrors, zone plates, slits, diffraction gratings) with respect to the floor, to the level of a few microns over an experimental run. Stable cooling water temperature (+/-1 °C) is also needed if water cooled components in the photon beam are to be stationary at this level.

3.3.1. Thermal stability of large monochromators

As an example of the large optical instruments to be installed at the ALS we consider the 55m radius spherical grating monochromator [7], built by LBL for SSRL at SPEAR. Figure 6 shows this device. It has entrance and exit slits as narrow as 10μm which slide along the direction of the incoming and outgoing central ray. The slides and the grating chamber are supported separately and fastened to the floor with a precision of 150μm. The slides and the gratings are then aligned optically with respect to one another with a precision of a few microns.

At the ALS the photon beam emittance and the monochromator acceptance are approximately the same. It is essential to maintain the alignment of the monochromator and its position with respect to the storage ring with a precision of a few microns over a time period of 24 hours, so that fine adjustments can be made and followed by an extended period of measurement.

The 55m radius device for SSRL is supported from the floor on water filled steel legs. This thermal ballast averages rapid changes in temperature to suitably small values so that the vertical thermal motion is negligible. A sudden change in air temperature of 1 °C gives vertical motion amounting to 1μm after six hours with this design. Studies at SSRL [8] show that the

opening of nearby roller doors causes air temperature changes in the vicinity of the monochromator of up to ten degrees centigrade. However, the thermal motion of the water filled legs under these conditions is less than 1μm if the doors are open for less than an hour.

With a larger mass of water we could achieve micron thermal stability at the ALS over 24 hours using this principle, provided the air temperature is stabilized to +/-1 °C.

3.3.2. Temperature sensitivity of water cooled optics.

Once the problem of stable structural supports is solved, the thermal expansion of the optical components and their alignment mechanisms in vacuum must be considered. Mirrors and monochromators are to be water cooled and the bulk of their structure will be at the temperature of the cooling water. If this water is stabilized to +/- 1 °C, and if thermal motion is to be of the order of 1μm, one can use a structure from the top of the stable support to the line of the photon beam equivalent to no more than 6 cm length of metal. This is about the minimum required for grating and mirror supports and corresponds approximately to the design for the SSRL 55m radius monochromator.

3.4. Insertion devices

Undulators and wigglers will be hybrid permanent-magnet devices with iron poles. The magnetization of the Neodymium-Iron permanent magnet material changes by 1 part in 1000 per degree centigrade. If the temperature changes by 1 °C the wavelength shift will be 15% of the full line width when using the fundamental and about 1/4 of the line width of the fifth harmonic. For better performance it will be necessary to enclose the insertion devices within the tunnel and stabilize the air temperature within the enclosure more precisely.

3.5. Photon monitors

Figure 7 shows the location of a pair of photo-electron position monitors installed in the front end of an insertion device beamline. These monitors will provide horizontal and vertical position error signals which can be used to control a local bump in the electron orbit around the insertion device, to stabilize the photon beam. For slow thermal fluctuations the limit to the precision of the local feedback loops will simply be the accuracy of the measurement of the photon beam position. If these measurements are made with an r.m.s. error of 1μm, and if crosstalk between different loops is not a

problem, the complete stability specifications may be achieved by this system. These requirements on the position resolution and stability of the monitors are severe. They should be thermally stable to 1μm. This stability can be achieved if these monitors are mounted from the floor using steel or low expansion composite materials, with water for thermal ballast, and if the air temperature is stabilized to +/-1 °C. Because the sense elements of these monitors will be water cooled, and operate at the temperature of the cooling water, this too must be stabilized to +/-1 °C.

Photon monitors will also be in use to sense the position of the photon beam further downstream in the beam line, and possibly to generate error signals for feedback loops acting on moving mirrors. Such mirror feedback systems will probably be required in addition to the electron orbit feedback loop to achieve the required vertical stability specifications.

4. Specifications for two levels of stabilization

There is a limit to the precision of temperature stabilization to be expected in a large facility like the ALS. Furthermore, it is clear from the thermal calculations that the effects of temperature changes as small as 1°C must be compensated by feedback systems to achieve the beam stability required. There is an obvious need for feedback in addition to temperature stabilization. The question then arises, to what precision should the temperature be stabilized and what level of residual motion should the feedback systems be required to remove.

We would like to stabilize the air and water temperature to +/-1 °C in the experimental area, and to +/- 2 or 3 °C in the storage ring tunnel, for the following reasons.

1)This level of stability in the experimental area is necessary for the operation of optical equipment on the beamline.

2)At this level of stability in the storage ring tunnel the beam motion will be of the order of the r.m.s. beam size, so that beam lines without active feedback systems can be useful for less demanding experiments and for tests.

3)Photon position monitors will be designed to intercept the fringes of the beam and will have a limited active aperture. With temperature stabilization at +/- 2 or 3 °C in the storage ring tunnel and beam motion of the order of the r.m.s beam size we should be able to close the feedback loop without manual positioning of the beam. This is an essential requirement for operation of multiple stabilization loops at the ALS.

4)At this level of thermal stability the position sensitive photon monitors can be engineered to be stable to a few microns, which is essential for the successful operation of feedback systems.

5)The amplitude of corrections applied to the electron orbit as part of a local bump around a single insertion device, under feedback control, should be small. This will allow the numerous bumps to be localized to the extent that they do not significantly interact.

At this level of temperature regulation, feedback correction is required to reduce the electron beam motion by about a factor of ten. Dynamic orbit bumps should thus be localized with less than 10% crosstalk, so that the various feedback loops are effectively decoupled. This goal is probably achievable. If the loops were required to reduce beam motion by a larger factor, as would be the case without temperature regulation, they would probably interact and their operation would be significantly complicated.

6)This level of temperature control will stabilize the insertion devices (except for demanding experiments using high harmonics) and most beamline instrumentation and experimental equipment.

Thus we envision two levels of stabilization against thermal effects, temperature stabilization and feedback.

5. First level of stabilization, temperature control

A conventional air conditioning system has been designed for the ALS facility [10] to meet the specifications outlined in section 4. This stabilizes the beamlines and allows feedback systems to operate effectively on the residual motion of the photon beams. Further local temperature stabilization may be required for insertion devices and for photon position monitors.

6. Second level of stabilization, feedback

Having achieved the above level of thermal stability, feedback systems can be employed for further improvement. Efforts are underway at SSRL [11], at the photon factory [12], and at NSLS [13] to compensate for photon beam motion with correction magnets which change the closed electron orbit locally or globally around the storage ring in response to signals from electron or photon position monitors. Some success has been reported with such closed loop feedback systems operating from DC to frequencies of tens of Hz. Beam motion amplitudes have been reduced by several orders of magnitude when the frequency is low, and by a factor of 10 or more up to frequencies of several Hz.

The ALS storage ring has electron beam position monitors at 96 locations and 96 correction magnets. These detectors and correctors will be used to make closed orbit corrections compensating for magnet installation misalignments (150μm).

Local feedback loops are planned, using high precision photon monitors in the beam line front-end (see figure 7) to control fine adjustments of the correction magnets on either side of the insertion device. The ratio of the strengths of these correctors will be chosen to minimize the effects at other locations in the storage ring. These ratios are dependent on the focussing fields between the correctors, i.e. the insertion device field and the strength of quadrupoles. In order that satisfactory localization be achieved as these parameters are varied, the amplitude of corrections under feedback control should not be too large. If temperature stabilization is implemented as described, the residual motion will be of the order of the beam size, so that these systems must reduce the residual motion by about a factor of ten to achieve the specifications. Crosstalk between localized correction bumps should therefore be 10% or less.

If thermal stability is achieved as described, thermal fluctuations should not move the photon beam by more than its own r.m.s. size, so that it will remain on the photon monitor even without a closed feedback loop in operation. Thus a loop could be opened and closed without disrupting the rest of the facility.

In order that these systems be effective against mechanical vibrations and electrical oscillations, in addition to thermal motion, they should operate up to frequencies limited by the thickness of the vacuum chamber (about 10Hz horizontally and 50Hz vertically).

In the event that the stringent requirements on stability and resolution of the front-end photon position monitors are not met, further systems may be required in the beamlines to achieve the stability specifications, particularly the vertical source position requirement, corresponding to $\sigma/10=6\mu m$. These systems will be moving mirrors, activated by piezo-electric pushers under feedback control from specialized photon position monitors downstream. The required dynamic range of these systems will be small, but they must also respond up to frequencies of tens of Hz.

Acknowledgements

This work was carried out with the assistance of a large number of personnel from the ALS project, who formed the 'ALS Working Group on Thermal Stability'.

References

[1] "1-2 Gev Synchrotron Radiation Source, Conceptual Design Report",

Lawrence Berkeley Laboratory, PUB-5172, June 1986.

[2] "A Survey of User Stability Requirements at NSLS", W.Eberhardt,G.Ice, S.Krinsky and H.Rarback, NSLS internal note.

[3] Letters regarding differential settlement under the storage ring from Harding Lawson Associates, February and March 1988.

[4] "Thermal Expansion of the Concrete Floor Slab", J.A.Paterson, ALS internal note, LSME-134.

[5] "ANSYS" from Swanson Analysis Systems Inc.

[6] "TRACY, a Tool for Accelerator Design and Analysis", H.Nishimura, Proc. European Particle Accelerator Conf., Rome, June 1988.

[7] "Applications of Spherical Gratings in Synchrotron Radiation Spectroscopy", H.Hogrefe,M.R.Howells and E.Hoyer, SPIE Vol.733(1986)274.

[8] "Water filled Tubes", A. Warwick, ALS internal report LSBL22

[9] "Characteristics of synchrotron radiation", K-J.Kim in "X-ray data booklet", Lawrence Berkeley Laboratory, PUB-490-rev

[10] light source building air conditioning design, Keller + Gannon, architects

[11] R.Hettel, private communication.

[12] "Beam Position Monitoring and Feedback System at the Photon Factory", T.Katsura,Y.Kamiya,K.Haga,T.Mitsuhashi and R.O.Hettel, Proc. 13th Intl. Conf. High Energy Accelerators, Novosibirsk, USSR, 1986.

[13] "An automatic beam steering system for the NSLS X-17T Beam Line Using Closed Orbit Feedback", R.J.Nawrocky,Li Ma,H.M.Rarback,O.V.Singh and L.H.Yu, Proc. 1987 Particle Accelerator Conf., Washington D.C., 1987.

Figure Captions

Figure 1.

Storage ring magnets and vacuum chamber mounted on one of the 12 sector support girders, and the ANSYS finite element grid assembled to model the thermal properties of this structure.

Figure 2.

Thermal motion of the storage ring structure and of the electron closed orbit around one arc of the ring when the magnets are energized for 1.5GeV electrons. The top part of the figure shows the transverse motion of the magnets, the middle part of the figure shows the transverse motion of the closed orbit, the bottom part of the figure shows the transverse motion of the electron beam position pickup buttons mounted on the vacuum chamber. In each case the triangles represent vertical motion and the squares represent horizontal motion.

Figure 3.

Thermal motion due to an increase in the air temperature of 1°C. The top part of the figure shows the transverse motion of the magnets, the middle shows the transverse motion of the closed orbit, the bottom part of the figure shows the transverse motion of the electron beam position pickup buttons mounted on the vacuum chamber. In each case the triangles represent vertical motion and the squares represent horizontal motion.

Figure 4.

Thermal motion due to an increase in the cooling water temperature of 1°C. The top part of the figure shows the transverse motion of the magnets, the middle shows the transverse motion of the closed orbit, the bottom part of the figure shows the transverse motion of the electron beam position pickup buttons mounted on the vacuum chamber. In each case the triangles represent vertical motion and the squares represent horizontal motion.

Figure 5.

Thermal motion of the closed orbit due to temperature gradient of 1°C around the storage ring.

Figure 6.

A schematic drawing of the LBL 55m spherical grating monochromator at SSRL.

Figure 7.

Proposed locations of photon position monitors in the beam-line front ends.

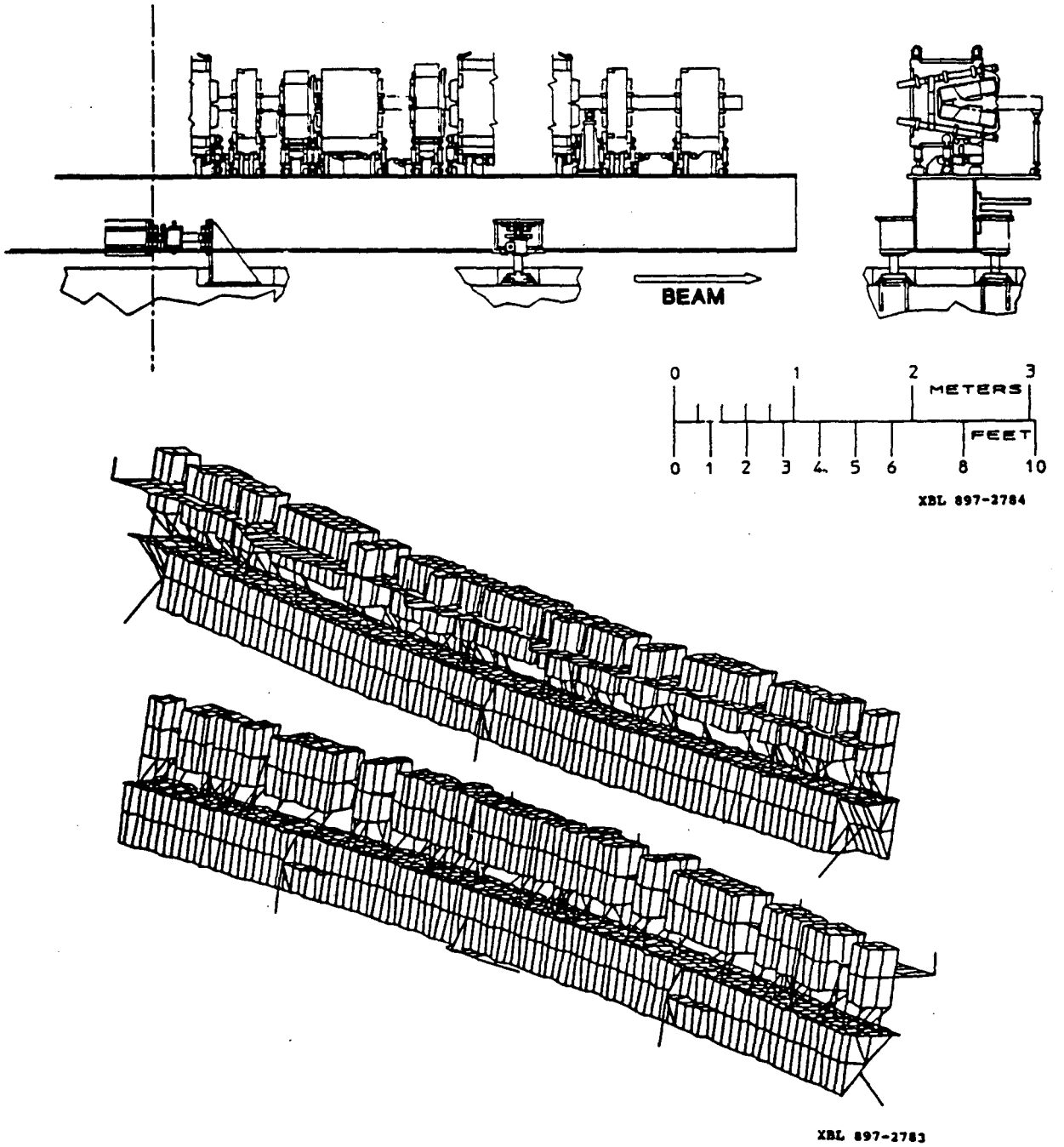

Figure 1

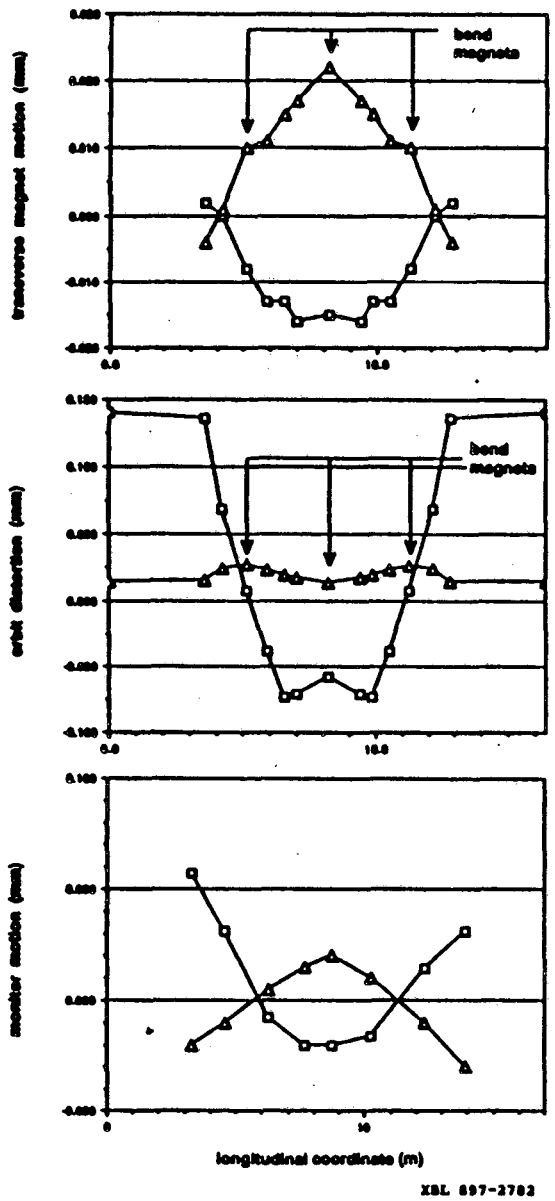

Figure 2

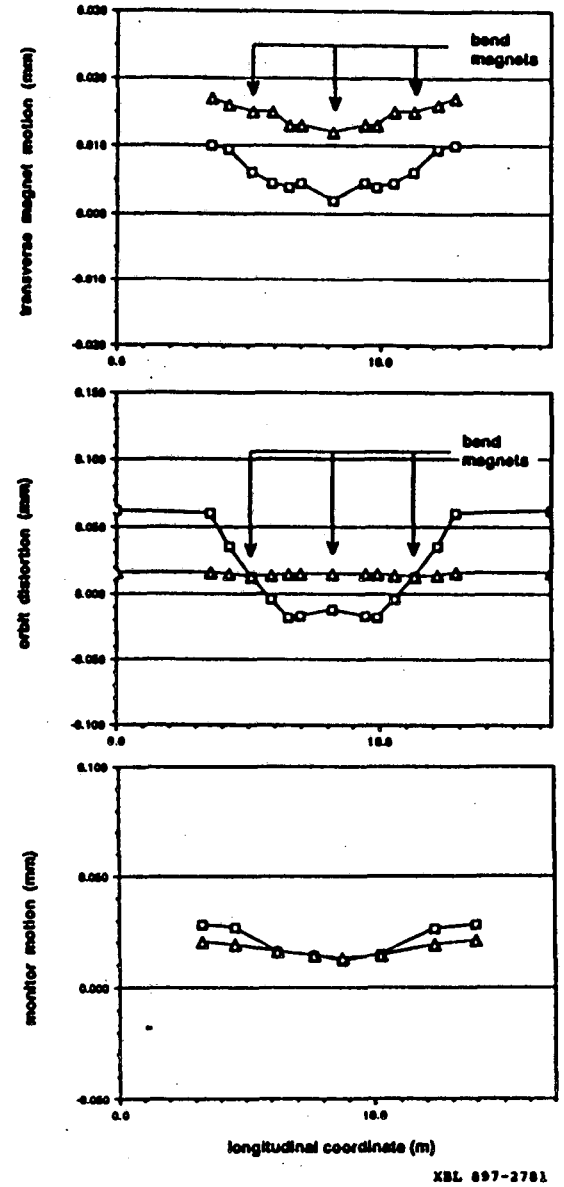

Figure 3

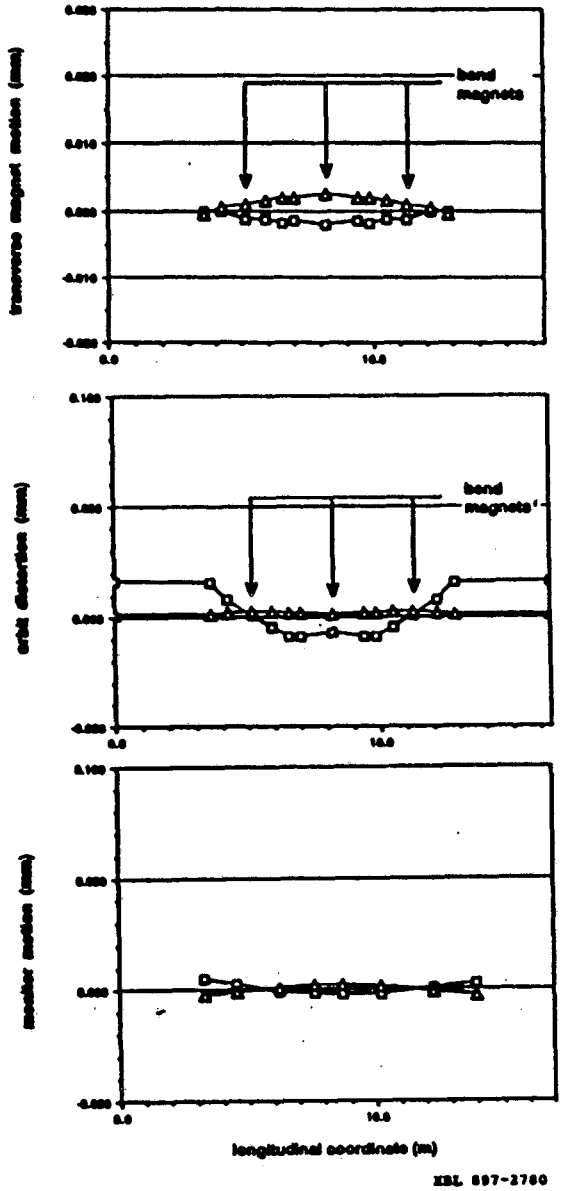

Figure 4

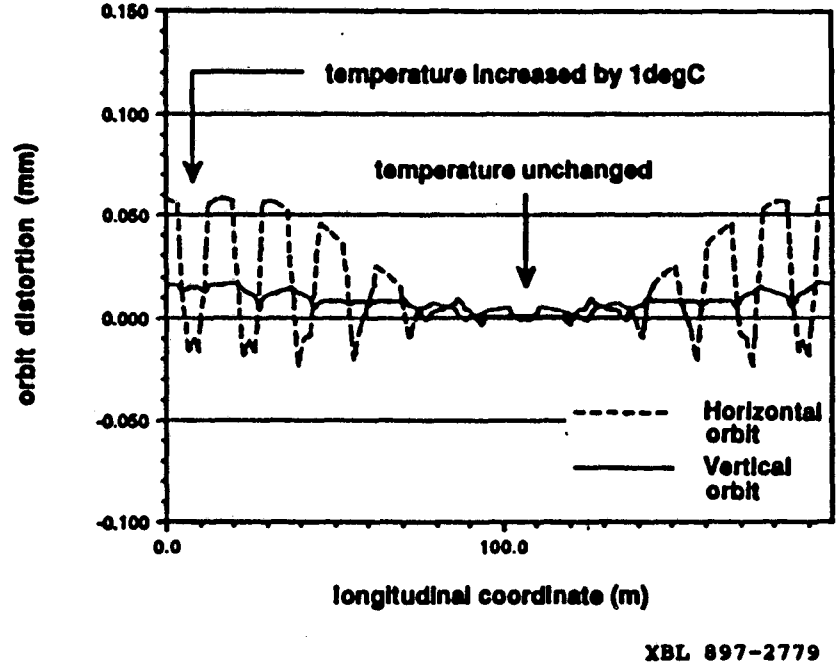

Figure 5

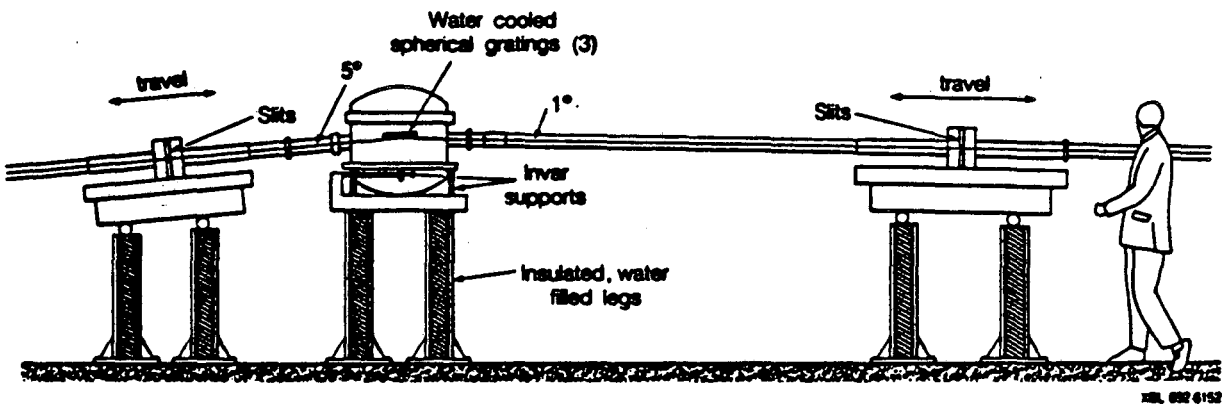
Water cooled
spherical gratings (3)
travel
5°
Slits
1°
travel
Slits
Invar
supports
Insulated, water
filled legs

Figure 6

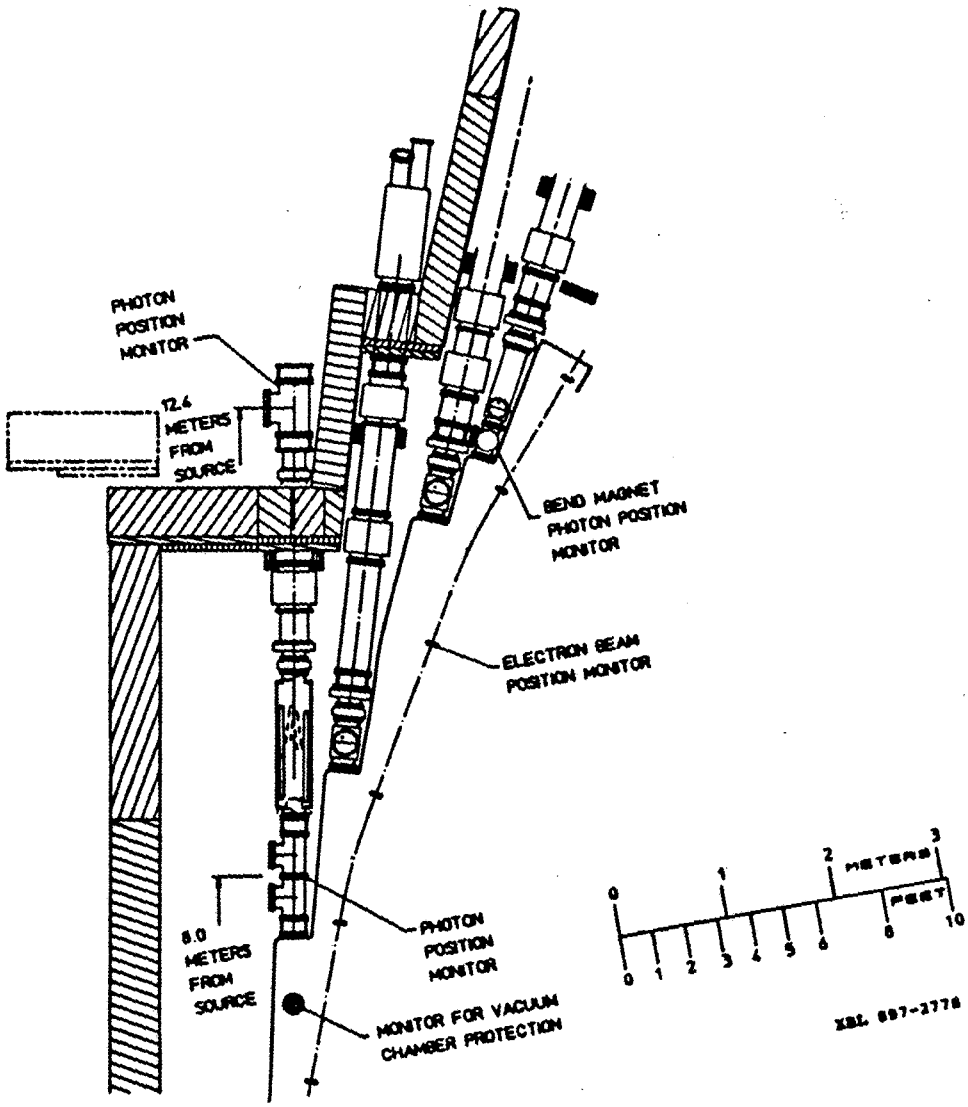
PHOTON POSITION MONITOR
12.4 METERS FROM SOURCE
BEND MAGNET PHOTON POSITION MONITOR
ELECTRON BEAM POSITION MONITOR
8.0 METERS FROM SOURCE
PHOTON POSITION MONITOR
MONITOR FOR VACUUM CHAMBER PROTECTION
METERS
FEET
XBL 897-2776

Figure 7

LAWRENCE BERKELEY LABORATORY
TECHNICAL INFORMATION DEPARTMENT
1 CYCLOTRON ROAD
BERKELEY, CALIFORNIA 94720