UC-109
LBL-27954

Lawrence Berkeley Laboratory
UNIVERSITY OF CALIFORNIA

APPLIED SCIENCE DIVISION

Development and Evaluation of a Superior Heat Recovery Design for Gas-Turbine Systems Using Gasified Coal

J.V. Russell* and S. Lynn

*(M.S. Thesis)

August 1989

For Reference
Not to be taken from this room

APPLIED SCIENCE DIVISION

LBL-27954
Copy 1
Bldg. 50 Library.

Prepared for the U.S. Department of Energy under Contract Number DE-AC03-76SF00098.

DISCLAIMER

This document was prepared as an account of work sponsored by the United States Government. While this document is believed to contain correct information, neither the United States Government nor any agency thereof, nor the Regents of the University of California, nor any of their employees, makes any warranty, express or implied, or assumes any legal responsibility for the accuracy, completeness, or usefulness of any information, apparatus, product, or process disclosed, or represents that its use would not infringe privately owned rights. Reference herein to any specific commercial product, process, or service by its trade name, trademark, manufacturer, or otherwise, does not necessarily constitute or imply its endorsement, recommendation, or favoring by the United States Government or any agency thereof, or the Regents of the University of California. The views and opinions of authors expressed herein do not necessarily state or reflect those of the United States Government or any agency thereof or the Regents of the University of California.

LBL-27954

DEVELOPMENT AND EVALUATION OF A SUPERIOR HEAT RECOVERY DESIGN FOR GAS-TURBINE SYSTEMS USING GASIFIED COAL

by

James V. Russell and Scott Lynn

Applied Sciences Division
Lawrence Berkeley Laboratory
1 Cyclotron Road
Berkeley, California 94720

August 1989

This work was supported by the Morgantown Energy Technology Center, Assistant Secretary for Fossil Energy, Office of Coal Utilization, Advanced Research and Technology Development, Division of Surface Coal Gasification through the U.S. Department of Energy under Contract No. DE-AC03-76SF00098.

Development and Evaluation of a Superior Heat-Recovery Design for Gas-Turbine Systems Using Gasified Coal

James V. Russell

ABSTRACT

This study investigates the impacts of high- and medium-temperature coal-gas clean-up methods on the thermal efficiency of coal-gas turbine systems for power generation, and the development of a novel heat-recovery design that improves the thermal efficiency of systems using medium-temperature clean-up. High-temperature clean-up cools hot coal gas (1850°F - 2400°F) to 1200°F by evaporation of water; medium-temperature clean-up saturates the hot coal gas to about 400°F with evaporated water. The effect of using different methods of coal gasification is explored using a Texaco oxygen-fed gasifier and two fluid-bed gasifiers; one fed with oxygen, the other with air.

An initial investigation of the Intercooled, STeam-Injected Gas turbine (ISTIG) heat recovery-design, coupled with the Texaco gasifier shows high-temperature clean-up to have a thermal-efficiency advantage of roughly one percentage point over the medium-temperature clean-up method. The effect of different gasifiers on thermal efficiency is also investigated using the ISTIG design, and shows the fluid-bed air gasifier to give an efficiency 1.4 percentage points higher than the Texaco gasifier and 0.5 percentage points higher than the fluid-bed oxygen gasifier. Next the novel heat-recovery design is introduced and its performance is investigated with the three gasifiers. The fluid-bed gasifiers are both about 3 percentage points more efficient than the Texaco gasifier in the novel design. Finally the novel design, which uses medium-temperature coal-gas clean-up, is shown to be more efficient by 1.5 to 3.5 percentage points than the ISTIG design using high-temperature clean-up, depending on the gasifier used. The novel heat-recovery design is shown to have a higher capital cost, but a short pay-back period on the additional capital.

ACKNOWLEDGEMENTS

This research was supported by the Assistant Secretary for Fossil Energy, Office of Coal Utilization, Division of Surface Coal Gasification of the U.S. Department of Energy under Contract No. DE-AC03-76SF00098.

My advisor during this research was Dr. Scott Lynn, who conceived the idea of the advanced design for using and cleaning gasified coal in a gas turbine system. I appreciated his wealth of knowledge and criticisms as I pursued this study.

I particularly appreciated the generous assistance and support of my fellow labmates: Tom E. Colson, Charles R. Higdon, R. Marshall Hix, Dr. Dan Neumann and Craig A. Stevens. Without their help I doubtless would have drowned in a quagmire of computer software and hardware.

TABLE OF CONTENTS

Chapter 1, Introduction 1
- 1.1 Coal-Gas Clean-Up 1
- 1.2 Cool Water Design 2
- 1.3 High-Temperature Coal-Gas Clean-Up 3
- 1.4 Medium-Temperature Coal-Gas Clean-Up 5
- 1.5 Heat-Recovery Methods 6
- 1.6 Coal Gasifier Types 7

Chapter 2, Technical Approach to Process Simulation 11
- 2.1 Computer Model Operations 12
- 2.2 Design Assumptions 12
- 2.3 Module Descriptions 14
  - 2.3.1 Thermodynamics 14
  - 2.3.2 Compressor 15
  - 2.3.3 Turbine 16
  - 2.3.4 Combustion-Chamber 18
  - 2.3.5 Heat-Exchanger 18
  - 2.3.6 Boiler 19
  - 2.3.7 Steam Boiler 20
  - 2.3.8 Coal-Gas Quench 20
  - 2.3.9 Air-Quench 21
  - 2.3.10 ISTIG Steam-Generator 21
  - 2.3.11 Coal Gasification 22

Chapter 3, Intercooled, Steam-Injected Gas Turbine Systems 23
- 3.1 Heat-Recovery Methods 23
- 3.2 ISTIG Heat Recovery 24
- 3.3 Full-Quench / Partial-Quench Comparison 26
  - 3.3.1 Full-Quench and Partial Quench System Flowsheets 28
  - 3.3.2 Effect of Compressor Loading 38
  - 3.3.3 Effect of System Pressure 38
  - 3.3.4 Analysis of System Performance 40
  - 3.3.5 Differences in Optimal Pressure 41
- 3.4 Gasifier Comparisons using an ISTIG System 41
  - 3.4.1 Texaco O_2 Gasifier 42
  - 3.4.2 Fluid-Bed Gasifier Requirements 42
  - 3.4.3 Effects of Compressor Loading and System Pressure 51
  - 3.4.4 Gasifier Comparisons 51
  - 3.4.5 Improved Thermal Efficiency with Fluid-Bed Gasifiers 53

Chapter 4, Advanced Design Heat Recovery 55
- 4.1 Details of the Advanced Design 57
- 4.2 Advanced Design Potential 58
- 4.3 Advanced Design Performance 59
  - 4.3.1 Gasifier Design Modifications 60
  - 4.3.2 Effect of Compressor Loading 77
  - 4.3.3 Effect of System Pressure 82
  - 4.3.4 Relative Gasifier Performance 84

Chapter 5, Capital Costs of the ISTIG and Advanced Designs 87
- 5.1 ISTIG and Advanced Design Comparison 89
- 5.2 Gasifier Comparisons 90

5.3 Heat-Exchange Capital Cost Summary 96

Chapter 6, Conclusions and Recommendations 98

References 101

Appendix 102
Main Driver Program DRVR 103
Unit Operation Modules
Subroutine AIRQN 110
Subroutine BOILER 113
Subroutine COMPRSSR 115
Subroutine EXCHANGR 117
Subroutine MIXER 120
Subroutine QUENCH 122
Subroutine SPLITTER 126
Subroutine TURBINE 127
Thermodynamic Module
Subroutine ENTHALPY 129
Subroutine CRITS 131
Subroutine FUGACITY 132
Subroutine HIDEAL 133
Subroutine PITZER 135
Subroutine SAT 137

Chapter 1 INTRODUCTION

The gasification of coal is currently being studied by numerous investigators as a promising method of using coal to produce electric power. Conventionally, coal has been burned at atmospheric pressure to fire a high-pressure steam boiler, the high-pressure steam then driving an expansion turbine which drives an electric power generator. This conventional method has the economic disadvantage of having a low thermal efficiency (only about 35 percent for a coal-fired plant equipped for flue gas desulfurization). Additionally, it is difficult to control emissions from a conventional coal-fired power plant. This difficulty arises from the high amounts of NO_x production (caused by high flame temperatures in the boiler) and by the fact that emissions control is attempted at the stack exhaust where the pollutants are dispersed in the low-pressure (*i.e.* high-volume) stack gas.

A potentially more efficient and environmentally more acceptable method of producing electric power from coal uses a combustion turbine in which compressed air and gasified coal are burned and pass directly through an expansion turbine. A similar method is already in operation for some peak-power generators which burn jet fuel or natural gas. To use coal in a combustion turbine requires the initial gasification of the coal, and the clean-up of the coal gas before combustion.

1.1 Coal-Gas Clean-Up

One of the major difficulties that arises when using coal gas as a fuel is that the gasified product contains particulates and gaseous pollutants that must be removed prior to the combustion of the coal gas. The particulates come from the non-organic components of coal and appear as either solid ash or molten slag in the gasifier exit stream, depending on the operating temperature of the gasifier. The gaseous pollutants consist mainly of hydrogen sulfide (H_2S) , carbonyl sulfide

(COS) and ammonia (NH_3), with H_2S predominating. The fuel components of the coal gas are carbon monoxide (CO), hydrogen (H_2), and methane (CH_4). The purified coal gas will contain these desirable components plus a few diluents, mostly nitrogen (N_2), carbon dioxide (CO_2), water vapor (H_2O) and argon (Ar). The particulates must be removed from the coal gas to prevent mechanical damage to the turbine and the gaseous pollutants must be removed for environmental reasons. However, since the pollutants are removed from the high-pressure (300-500 psia) coal gas instead of from the atmospheric-pressure stack gas, it is possible to remove a higher fraction of the pollutants with a lower thermal efficiency penalty.

Coal-gas clean-up will clearly play a very important part in the realization of the use of gasified coal to produce electric power. It is a step that can have a great deal of impact on the thermal efficiency of a power plant using gasified coal as a fuel. Thermal efficiency is defined as the fraction of the chemical energy in the coal, based on the higher heating value (HHV) of the coal, that is converted to electric energy. The HHV of coal is calculated by assuming that the H_2O produced from combustion ends up in the liquid form and thus contributes its latent heat of evaporation to the heating value of the coal. Cleaning the coal gas will always have some negative effect on the thermal efficiency, but the proper process design will minimize this impact in a manner as operationally facile and as economical as possible.

1.2 Cool Water Design

The only operational power plant currently using coal-gas technology is the Southern California Edison Cool Water Station plant near Daggett, California. A report was prepared for EPRI by Fluor Engineers (EPRI, 1984) which based its design configurations and calculations on the Cool Water design. That report will be cited for comparison purposes and will be referred to as the Cool Water design. The Cool Water design uses a clean-up method that passes the coal gas through

many different heat-recovery stages to cool the coal gas to ambient temperatures prior to desulfurization. High-pressure steam that is produced by cooling the coal gas is combined with steam produced by cooling the gas-turbine exhaust and sent to a steam turbine.

The initial cooling of the coal gas in the Cool Water design is accomplished in a radiant heat-transfer unit and then in a convective heat-transfer unit, with both units producing high-pressure steam. The coal gas is further cooled by heat exchange with clean, low-temperature coal gas returning from the desulfurization unit. The coal gas then passes through a water scrub to remove particle fines and is finally cooled to ambient temperature by heat exchange with several water streams.

This cooling of the coal gas (from 2400°F to 100°F) is done to accommodate the H_2S removal, which is accomplished using Selexol solvent to absorb the H_2S. The H_2S is then stripped from the solvent and sent to a Claus reaction unit, followed by a SCOT tail-gas clean-up unit. The treated coal gas leaving the Selexol absorber unit has a temperature of approximately 85°F. It is then contacted with hot water to heat the coal gas to 350°F and to provide water vapor in the combustion chamber, which helps control combustion temperature and inhibits NO_x formation. The saturated coal gas is then reheated to 570°F prior to combustion. This clean-up method, while effective at cleaning the coal gas, is capital-intensive and is not thermally efficient; it thus significantly reduces the thermal efficiency of the power plant. The Cool Water design has a thermal efficiency of 37.9 percent, only about 3 percentage points higher than a conventional coal-fired plant.

1.3 High-Temperature (Partial-Quench) Coal-Gas Clean-Up

In an effort to improve the thermal efficiency of power plants that would

use coal gas, the Department of Energy has funded considerable research into a high-temperature method of coal-gas clean-up which will be referred to as the partial-quench method. This method takes the hot coal gas from the gasifier and partially quenches it by evaporating water into it to reduce the temperature to around 1200°F. The clean-up is then effected on this still relatively hot coal gas, because doing so would involve removing as little heat as possible from the coal gas while still allowing its cleaning. With the high-temperature coal gas then being sent to combustion, the thermal efficiency of the power plant would be improved over the Cool Water design .

To effect the clean-up in the partial-quench method, the larger particulates are removed by cycloning and the smaller by filtration or electrostatic precipitation. Next, the H_2S and COS are removed by chemisorption from the gas stream. This removal would probably be accomplished using a fixed bed of zinc ferrite, which would require periodic regeneration. The method of NH_3 removal is yet to be determined. The partial-quench method of coal-gas clean-up would improve the thermal efficiency of the power plant, but would also be rather difficult from a process standpoint.

Cleaning coal gas at a temperature of the order of 1200°F, as in the partial-quench method, to remove both particulates and gaseous pollutants is a challenging technical problem which has not been satisfactorily accomplished to date. Electrostatic precipitation at 1200°F has not been demonstrated on a commercial scale. The filtration step would require periodic back-blowing to remove particulate build-up. The H_2S-removal beds would require periodic regeneration. Both the particulate removal and H_2S-removal steps would be batch processes and would inflict severe thermal stresses on all the equipment involved. However, the partial-quench method does appear attractive because it leaves the coal gas with more sensible heat after cleaning than does the method used in the Cool Water

design.

1.4 Medium-Temperature (Full-Quench) Coal-Gas Clean-Up

Another method of coal-gas clean-up that could be used, which has not been studied extensively to date, involves quenching the coal gas to its adiabatic saturation temperature with water. This clean-up method will be referred to as the full-quench method. The temperature of the coal gas leaving such a quench would typically be around 400°F. The full-quench method would consist of an initial aqueous scrubbing step that would effect the initial cooling of the coal gas and simultaneously remove particulates. The NH_3 could also be removed in this aqueous scrubbing step or could be removed in a separate step at the same temperature, if it were desired to recover the NH_3 separately. The quenched coal gas could then be scrubbed for H_2S removal, still at the same temperature, using an aqueous system or various other technologies. (One possible aqueous H_2S scrubbing system could use a metal sulfate to react out the H_2S and COS, forming an insoluble sulfide. The sulfide could then be reacted with sulfur dioxide to regenerate the original aqueous metal sulfate while producing elemental sulfur as a side product.) The cleaned coal gas, saturated with water vapor, would comprise the fuel gas that would be sent to the combustor. The full-quench method would produce a cleaned coal gas having a considerably lower sensible heat and greater mass flow than that of the partial-quench method, yet still substantially higher in both respects than that of the ambient-temperature method currently being used in the Cool Water design.

The full-quench method has several advantages from a process standpoint, as the coal gas emerging from the full-quench has a temperature of only about 400°F and the particulates are removed from the quench as an aqueous slurry. The full-quench method would not require cyclic operations as does the partial-quench method. This method has not been extensively investigated because the

full-quench method results in a significantly lower sensible heat for the quenched coal gas, which is thought to reduce the thermal efficiency for power production. Additionally, the full-quench method evaporates more water into the coal gas, water which ultimately leaves the process as water vapor in the stack exhaust. It can be undesirable to have large amounts of water vapor in the stack exhaust as this represents lost heat from the system in the form of latent heat. However, the greater water evaporation of the full-quench has the partially offsetting advantage that increased water vapor in the coal gas reduces the need for excess compressed air to control the inlet temperature to the combustion turbine.

1.5 Heat-Recovery Methods

A major concern in any gas-turbine power plant is the effective recovery of heat from the turbine exhaust. The Cool Water design uses a combined cycle to take advantage of the heat remaining in the combustion-turbine exhaust. A combined-cycle design produces high-pressure (about 1500 psia) steam by transferring heat to boiler feed water from the combustion turbine exhaust. The high-pressure steam is sent to a steam-turbine system to produce more electric power. The addition of combined-cycle heat recovery to a gas-turbine power plant significantly improves the thermal efficiency of the plant. However, the additional turbine system also significantly increases the capital cost of the plant.

A different heat-recovery design, which also improves thermal efficiency with less capital investment than the combined cycle, is the intercooled, steam-injected gas turbine (ISTIG) design. An ISTIG design produces medium-pressure (300-500 psia) steam from the turbine exhaust, much like the combined-cycle design. The ISTIG design then injects the medium-pressure steam into the combustion chamber of the direct-combustion turbine along with the compressed air and fuel gas. Steam injection reduces the requirement for compressed air while in-

creasing the mass flow through the turbine and thus produces more power using the same turbine for the combustion gases and steam. Steam injection also provides a way to add water vapor to the combustion chamber to control combustion temperature and NO_x formation.

1.6 Coal Gasifier Types

The Texaco O_2 coal gasifier, which is being used in the Cool Water design, is an entrained-flow gasifier that uses O_2 to accomplish the partial oxidation of the coal feed to convert the solid coal to gaseous compounds, including the fuel components CO and H_2. The coal is fed to the gasifier as an aqueous slurry with a water content of roughly 34 percent. Water used to make the coal slurry is preheated in the process to around 250°F before being added to the coal, and is added to allow the coal to be pumped into the gasifier. Prior to adding the slurry water, the coal is pulverized to a particle size of less than 0.1 mm. The oxidant used is 95 percent O_2, which is produced by cryogenic separation of air. The coal slurry is sprayed into the gasifier and entrained into the O_2 stream, resulting in a cocurrent type of gasification. Typical exit temperatures from this type of gasifier are normally 2400-2600°F. The mineral content of the coal melts and forms a slag in the gasifier exit stream.

In this study of coal-gas turbine systems, two other types of gasifiers were considered because of their potentially different impacts on system thermal efficiency. Both of the additional gasifiers were fluid-bed gasifiers, in which the coal is pulverized and added dry to the gasifier. Two sources of oxygen were considered: simple compressed air and 95 percent O_2 from cryogenic separation. Both gasifiers inject a stream of high-temperature steam (950°F) into the gasifier to supply H_2O that is consumed by direct reaction with carbon and in the water-gas shift reaction. Coal is typically ground to a particle size of less than 8 mm for proper fluidization.

Fluid-bed gasifiers, unlike the Texaco gasifier, do not add water to the coal and thus suffer a smaller thermal penalty of coal-gas energy content in gasification. Additionally, fluid-bed gasifiers have a much lower exit temperature than entrained-flow gasifiers, 1850°F instead of the 2400°F for the Texaco O_2 gasifier. This lower temperature of the coal gas leaves more of the original energy content of the coal in chemical form rather than in sensible heat form. Gasification occurs at a lower temperature in a fluid-bed gasifier due to the countercurrent flow of the coal and hot gases, unlike the entrained-flow gasifier where the flow is cocurrent. The mineral content of the coal is not melted to form slag in a fluidized-bed gasifier, due to the lower gasifier temperature, and leaves the gasifier as ash, which could possibly pose a minor environmental problem as the ash is not fused like the slag. Ash handling could possibly be more difficult than slag handling but as all mineral material is removed in an aqueous scrub in the full-quench method, this is not expected to be a problem. Fluid-bed gasifiers are dependent on a local source of high-temperature steam. However, this dependence on a source of steam is not a problem when an ISTIG design is used since the steam required can easily be taken from the steam generated in the heat-recovery section. Table 1.1 shows the important characteristics of the three different types of coal-gas streams which are produced by the three different methods of coal gasification that were used in this study.

This thesis is a study of the effect that both the partial-quench and full-quench methods of coal-gas clean-up have on the thermal efficiency of a power plant burning gasified coal. Additionally, the effect of using three different methods of coal gasification on system efficiency are considered. An initial comparison of the two coal-gas clean-up methods and the different gasifier types is made using an ISTIG heat-recovery design. An advanced heat-recovery design is then described which significantly improves the thermal efficiency of a system

Table 1.1

Comparison of Coal-Gas Streams
Produced by Three Different Types of Gasifiers

Gasifier:	Texaco	Fluidized-bed	Fluidized-bed
Oxidant:	95% O_2	95% O_2	Air
Exit Temperature :	2400°F	1850°F	1850°F
Pressure:	500 psia	500 psia	500 psia
Relative Flow per Unit Coal:	1.00	0.78	1.60
Water-to-Coal Ratio (w/w):	0.50	- -	- -
Steam-to-Coal Ratio (w/w):	- -	0.12	0.18
Oxygen-to-Coal Ratio (w/w):	0.65	0.58	- -
Air-to-Coal Ratio (w/w):	- -	- -	3.3
Coal-Gas Composition (mole fraction):			
CO	0.396	0.544	0.268
H_2	0.303	0.276	0.156
CH_4	0.001	0.058	0.010
CO_2	0.108	0.047	0.038
H_2O	0.165	0.044	0.041
N_2 + Ar	0.016	0.017	0.481
H_2S	0.010	0.013	0.006
NH_3	0.002	- -*	- -*

* Not known, assumed negligible

using the full-quench clean-up method. Most of the emphasis in developing the advanced design is directed towards optimizing the heat recovery from the turbine exhaust, which is facilitated by the lower temperature of the quenched coal gas. The thermal efficiency of the advanced design is investigated using the same three coal gasifiers. In all cases, the sensitivity of the processes is investigated with respect to system pressure and the division of work between the two stages of air compression. The intention of this thesis is to show that the full-quench clean-up method allows a superior process design which has a thermal efficiency higher than that of the partial-quench clean-up method, with the operational advantage of aqueous scrubbing for the clean-up of the coal gas.

Chapter 2 TECHNICAL APPROACH TO PROCESS SIMULATION

To investigate the performance of gas-turbine power plants using coal-gas feeds with various process configurations, it was necessary to develop a computer model that would simulate the performance of these power plants. A computer model was thus written using Microsoft FORTRAN (Version 4.1) which has proven to be effective in simulating power-plant process designs. The calculations were performed on an 80386-based, 20 MHz personal computer that employed MS-DOS version 3.3. This chapter of the thesis is intended to give the reader sufficient information to understand the technical approach that was used without discussing the programming steps that were involved in the code. If more detail regarding the exact nature of the computer model used is desired, the reader should refer to the Appendix where the actual computer model code is listed. Some of the code used in this model was adapted from a previous computer model designed by Higdon (1988) that was written to evaluate heat recovery for various gas-turbine systems that used natural gas.

Since many different process designs were to be examined, it was necessary to develop a model that would be very flexible and reasonably fast in execution. For this reason, a modular design was chosen for the computer simulation. Each process design consists of various individual process units, or modules, that represent individual unit operations implemented in the design, such as a turbine or a heat exchanger. The appropriate modules are linked together by interconnecting process flow streams to form the computer model of a particular power-plant design. In addition, there is a thermodynamics module that calculates thermodynamic properties for every process flow stream based on the temperature, pressure, composition and flow rate of the stream.

2.1 Computer Model Operation

The computer model evaluates system performance by solving the heat and material balances of the process in an iterative manner. The final process solution is approached using a method of simple substitution, where the results of a particular iteration are used as the starting point for the next iteration. In the case of the first iteration, an input file supplies the essential starting parameters for independent streams plus additional guesses for dependent streams if fewer iterations are desired. The program has reached convergence when the stream flows of a given iteration differ from those of the previous iteration by no more than the convergence criterion, which was set at 0.1 percent for every process variable (temperature, pressure, flow rate, enthalpy and composition) for every stream in the system. If this criterion is exceeded for any one variable, the entire process calculation is repeated until convergence is attained.

There exists a main driver program that, for each iteration, picks the individual process modules and executes them in their proper order. The order of module execution is designated in an input file, separate from the streams input file. The main driver program assigns stream flow values when they must be specified and checks the convergence criterion for the streams at the end of each iteration. When the criterion has been met, the main driver prints out the system performance and calculates the system thermal efficiency as the net shaft work (turbine work minus compressor work) divided by the HHV of the coal used to make the input coal-gas stream.

2.2 Design Assumptions

To evaluate the performance of the various system designs, it is necessary to make certain assumptions regarding the operation of the units making up the system. In a rigorous analysis of a particular system, it would be desirable to determine very accurate values for the unit parameters. However, when compari-

sons are being made between numerous different system configurations, it is helpful to make simplifying assumptions regarding the unit parameters. In this study, the important goal is to determine significant differences between the thermal efficiencies of different designs; the absolute magnitude of the thermal efficiencies is of secondary importance. Slight inaccuracies that might result from these simplifying assumptions should not significantly affect the comparison of one system to another. The assumptions used in this study were ones recommended by EPRI (Louks, 1988) and are listed in Table 2.1

Table 2.1

Assumptions for Design Performance Calculations

Feed air: $60^{o}F$, 14.4 psia*, 56% relative humidity

Boiler feed water: $60^{o}F$

Fuel: Coal, Illinois #6; HHV for coal is 12,774 Btu/lb, dry basis

Combustor: 100% efficiency, combustion products CO_2 and H_2O

Turbine efficiency: 88.0%, $2100^{o}F$ maximum allowable inlet temperature

Compressor efficiency: 86.8% efficiency

Heat exchangers: $25^{o}F$ minimum approach temperature

No radiant heat or shaft losses

Pressure drops:

- Heat exchangers,
  - High pressure gas: 2.0 psi
  - Low pressure gas: 0.5 psi
  - Water: 5.0 psi
- Combustor: 8 psi
- Coal-gas and air quench: 0.0 psi**

* pounds per square inch absolute

** Insufficient information available for accurate determination

2.3.0 Module Descriptions

A description of the individual modules and the assumptions involved for each follows below.

2.3.1 Thermodynamics Module

To encompass the broad range of temperatures and pressures that were examined in the development and testing of the various process designs (from ambient conditions to temperatures and pressures as high as 2400 ^{o}F and 1000 psia), it was necessary to design a thermodynamics module that would be accurate for all process conditions. Particularly at high pressures, the non-idealities of the vapor phase become very significant. These non-idealities are even more pronounced in those streams having high concentrations of water vapor, which was true for many of the streams that were examined. The thermodynamic basis needed to be accurate and also reasonably rapid in calculation.

The virial equation was chosen as the basis for the determination of vapor phase non-idealities. Ideal-gas enthalpies (gas enthalpies independent of pressure) were calculated as follows:

$$H_{ideal} = A_1T + A_2T^2/2 + A_3T^3/3 + A_4T^4/4 - F_{corr}$$

where

H_{ideal} = ideal gas enthalpy of a component at temperature T, Btu/lbmol
T = gas temperature, ^{o}R
A_j = constants in correlation
F_{corr} = correction factor to make ideal gas enthalpy zero at 77°F, Btu/lbmol

The values used for the constants in this equation are listed for each gas in the Appendix in the subroutine named HIDEAL, which calculates the ideal gas enthalpies. The constants are listed in two temperature ranges, the first of which is used for temperatures below 1800°R and the second for those above 1800°R.

These ideal gas enthalpies are then corrected to real gas enthalpies using correction factors determined by the virial equation following the method suggest-

ed by Prausnitz (1986). For ease of calculation, the virial equation was truncated after the second virial coefficient. The second virial coefficients for all the components except water vapor were calculated using the Pitzer-Curl-Tsonopoulos (1957) correlation which is based on the critical constants of the vapor stream components. The second virial coefficient for water vapor is based on the semi-empirical correlation of LeFevre *et al.* (1975). Enthalpies were defined such that a pure gas has zero enthalpy at 77°F in the ideal gas state (no molecular interactions and molecules with zero volume). The thermodynamics module would return either a molar heat capacity or a molar enthalpy (depending on which was desired) when given the necessary characteristics (temperature, pressure and composition) of a particular stream.

Steam-table quantities, such as the molar enthalpies of saturated water and steam as well as the heat of vaporization and the saturation pressure were calculated using an empirical correlation of the steam tables, which was developed by Irvine and Liley (1984). The relative error of this correlation is less than 0.5 percent throughout the range of the steam tables. Pressure effects on the enthalpy of water were considered negligible, thus the enthalpy of a water stream is assumed to be the same as that of a saturated water stream at the same temperature regardless of pressure. The thermodynamics module calculates steam-table quantities based either on a saturation pressure or temperature, depending on which variable is fixed.

2.3.2 Compressor Module

The compressor module calculates the net work of compression and exit temperature of a compressed gas stream. The compressor itself is modeled as a simple adiabatic compressor with a given efficiency, that efficiency being specified in the module input. The equation that is used for calculating the tempera-

ture change in a stage is as follows:

$$T_f = (T_i / \eta) \times [(P_f / P_i)^{((\gamma-1)/\gamma)} - (1-\eta)] \qquad \text{Equation 2-1}$$

Where:

T_f = temperature of the gas leaving the stage
T_i = temperature of the gas entering the stage
P_f = pressure of the gas leaving the stage
P_i = pressure of the gas entering the stage
η = efficiency of compression
γ = ratio of Cp to Cv, where Cp is the heat capacity at constant pressure and Cv is the heat capacity at constant volume

The work for each stage is the gain in enthalpy of the stream, which equals the average heat capacity Cp of the gas stream within each stage multiplied by the temperature difference between the inlet and the outlet of the stage. Since the molar heat capacities of the gas components change as the gas stream is heated by compression, the full compression from inlet pressure to the specified outlet pressure is subdivided into compression stages of equal compression ratio. An average molar heat capacity is calculated at the average temperature and pressure of each stage, which is then used in the determination of the work for that stage. The net compressor work is thus the sum of the individual work terms for each stage; the compressor exit temperature is the exit temperature of the final stage.

A compression efficiency of 86.8 percent is used for all compressors in the various designs. This efficiency was suggested by EPRI (Louks, 1988). For a completely accurate determination of the compressor work, one would need an infinite number of compression stages for each compressor. However, it was found that using more than ten stages did not noticeably change the work calculation. Therefore, each compressor is subdivided into ten compression stages for this calculation. Required input for the compressor module were the inlet stream characteristics as well as the compressor efficiency, the number of compression stages and the desired outlet pressure.

2.3.3 Turbine Module

The turbine module is modeled in an analogous manner to the compressor module. Adiabatic turbine expansion from inlet pressure to outlet pressure is divided into stages to account for the variation of molar heat capacities with temperature and pressure. The equation used for calculating the temperature change in a turbine stage is as follows:

$$T_f = T_i \times [(\eta \times (P_f / P_i)^{((\gamma-1)/\gamma)}) - (\eta-1)] \qquad \text{Equation 2-2}$$

Where:

T_f = temperature of the gas leaving the stage
T_i = temperature of the gas entering the stage
P_f = pressure of the gas leaving the stage
P_i = pressure of the gas entering the stage
η = efficiency of compression
γ = ratio of Cp to Cv, where Cp is the heat capacity at constant pressure and Cv is the heat capacity at constant volume

The work in each stage was set equal to the change in enthalpy, as in the compressor module. For turbines, an efficiency of 88 percent was suggested by EPRI (Louks, 1988). Once again, the use of ten individual expansion stages was found to be sufficiently accurate.

Modeling the turbine used in each design as a simple turbine with an allowable inlet temperature of 2100°F is an approximation which greatly eased the turbine calculations. Modern turbines have allowable inlet temperatures that are as high as 2400°F, but such turbines also have elaborate internal cooling of the turbine blades (Brandt, 1987). Cooling of the turbine blades is accomplished by bypassing some of the compressed air or steam from upstream of the combustion chamber into complex passageways within the blades. The calculations involved in determining the actual flows of coolant through the turbine blades and the true turbine performance parameters is very laborious, therefore an effective inlet-temperature approach is used in this study to facilitate ease of calculation. An effective inlet temperature is that temperature which, when used in a simple

(*i.e.*, uncooled) turbine model, results in the same system performance as would be obtained with a combustion gas at its actual inlet temperature which is fed to an actual turbine having the same efficiency but with blade cooling. The effective inlet temperature of 2100°F, which is used in this study with the simple turbine model corresponds approximately to an actual inlet temperature of 2400°F (Louks, 1988).

2.3.4 Combustion-Chamber Module

The combustion-chamber module is designed to calculate the exit stream composition which results from fuel combustion and the air flow required to meet an exit temperature criterion. Complete, adiabatic combustion of the fuel components is assumed (CH_4, CO and H_2 going to the stoichiometric amounts of CO_2 and H_2O). It is assumed that no appreciable amounts of NO_x are formed.

The exit temperature criterion is important because the exit stream from the combustor passes directly to the turbine, which has a maximum allowable inlet temperature. To achieve the maximum thermal efficiency in a gas-turbine system it would be desirable to use only the stoichiometric amount of compressed air needed for combustion, but doing so would produce a turbine inlet temperature that would destroy the turbine. Accordingly, an excess of compressed air is added to the combustion products to bring the combustor exit temperature down to the maximum temperature allowable in the turbine. As turbine technology improves, the maximum allowable inlet temperature will rise, but the currently feasible effective value of 2100°F is used in this study. Additionally, an eight psi pressure drop is assumed to occur in the combustor.

2.3.5 Heat-Exchanger Module

The heat-exchanger module models a simple, countercurrent-flow heat exchanger with no phase change and constant heat-transfer coefficients. A minimum temperature approach of 25°F was chosen as a general value for all heat

exchangers. This value would need to be modified in a more detailed study, depending on how critical the temperature approach used in a specific heat exchanger is to the system efficiency or on how the economics of the process is affected by the heat-exchanger design. The heat-exchanger module determines exit temperatures by first determining at which end of the heat exchanger the temperature pinch occurs and then calculating the temperature of the exit stream at the other end using an enthalpy balance. The heat-exchanger module also calculates UA, the product of the heat-exchange area (A) and the overall heat-transfer coefficient (U), which can be used for sizing heat exchangers. The values of U which were used were 70 for gas-liquid, 60 for boiler and 50 for gas-gas heat exchange in units of Btu per hour square-foot ^{o}F (Louks, 1988). These values are based on the inside area of tubes with external extended area (fins). High-pressure gas or liquid would flow on the tube side; low-pressure air or turbine exhaust would flow on the shell side of the heat exchangers.

2.3.6 Boiler Module

The boiler module is modeled essentially as a two-stage intercooler, with the first stage heating boiler feed water to its saturation temperature and the second boiling a fraction of the saturated water. When the air temperature from the second-stage compressor is less than the saturation temperature of water at system pressure plus the approach temperature, the boiler acts as a simple intercooler. The hot, compressed air from the first compressor stage is cooled in the boiler to a specified approach (25°F) with the boiler feed-water temperature. Pressure drops of 2.0 psi and 5.0 psi were used for the compressed air and the boiler feed water respectively.

To avoid the occurrence of an internal temperature pinch, the flow of the water stream into the boiler is set sufficiently high to force the temperature pinch to occur at the inlet of the boiler feed water. An internal pinch would be unde-

sirable because it would not allow the exiting air stream to be cooled to the fullest extent possible by the boiler feed water, thus reducing the effectiveness of the boiler as an intercooler. To set the water flow, first the heat capacity of the compressed air stream is calculated at its inlet temperature. Then the water flow is calculated by dividing the heat capacity of the air stream by the molar heat capacity of the boiler feed water.

The compressor intercooler is a boiler in those process designs where it is found that the water stream required to cool the air stream without boiling is so large that not all the heated water could be used in the process, thus requiring a cooling tower to cool the excess water flow. Using a boiler reduces the water-flow requirement by converting part of the sensible heat of the compressed air stream into latent heat of steam as well as into sensible heat of the water stream. The steam produced in the boiler is added to the quenched fuel stream, with a fraction being diverted to the gasifier when necessary.

2.3.7 Steam-Boiler Module

This module is needed in only one design, which will be discussed later. In that design there is insufficient steam generated in the boiler module to supply the amount of steam needed in the coal gasifier. The steam module is then installed in the system design to vaporize and superheat a preheated water stream coming from the boiler. The source of heat for the steam boiler is a cut from the turbine exhaust, the magnitude of which is set to force a temperature pinch at the hot end of the superheater. Inputs to this module are a water stream and a hot gas stream, with outputs of a cooler exhaust-gas stream and a superheated steam flow. The steam-boiler module assumes a five psi pressure drop for the water stream and a one-half psi pressure drop for the low-pressure, high-temperature turbine-exhaust stream.

2.3.8 Coal-Gas Quench Module

The coal-gas quench module cools the coal-gas feed to the system by evaporating water into the coal gas and also accomplishes the coal-gas clean-up. The coal-gas quench either partially quenches the feed coal gas from the gasifier temperature to a specified temperature or quenches the coal gas to its adiabatic saturation temperature, depending on which type of quench is desired. Evaporating enough water into the coal gas to reduce its temperature to 1200°F is used in the cases where a partial-quench method (as described in the Introduction) is desired. When the full-quench method is desired, sufficient water is evaporated into the coal gas to saturate it at system pressure. The coal-gas quench module calculates the amount of water required to accomplish the desired cooling and then calculates the new composition and flow rate of the coal-gas stream after evaporating the quench water and removing the pollutants.

Since it is not the purpose of this study to investigate the actual technology used to effect the coal-gas clean-up, the method of clean-up is not specified. In both the full- and partial-quench cases, the coal ash or slag is assumed to be removed at the temperature of the quench. H_2S and NH_3 are also removed at the temperature of the quench, with 100 percent removal of both pollutants assumed. No pressure drop penalty is assigned to either the partial-quench or full-quench method since the clean-up technology is not specified.

2.3.9 Air-Quench Module

The purpose of this module is to cool a compressed air stream to its adiabatic saturation temperature with water. There are two inputs to this module: compressed air and water stream characteristics. The two streams leaving the air quench have the same temperature and the air stream is saturated with water at that temperature. At the correct final temperature, the enthalpy of the final two streams equals the enthalpy of the two entering streams. As in the case of the

coal-gas quench, it is assumed that there is no pressure drop between the inlet and outlet of the air quench.

2.3.10 ISTIG Steam-Generator Module

The ISTIG steam-generator module, as implied by its name, is used only in the ISTIG design cases and is a heat-recovery system characteristic of the ISTIG design. The module recovers heat from the turbine exhaust by a series of three heat exchangers: an economizer, a boiler and a superheater. As the performance of the boiler and superheater must be solved simultaneously, the three exchangers are combined for convenience in one module. Heat recovered by this module produces a stream of superheated steam, at the same pressure as the air compressor outlet, that is sent directly to the combustion-chamber module.

The reason that the boiler and superheater exchangers must be solved simultaneously is because a temperature pinch occurs at the hot end of the superheater and at the cold end of the boiler, making possible only one flow of saturated water into the boiler. The economizer is not dependent on the performance of the boiler and superheater but its inclusion in the module is convenient.

The feeds to the ISTIG steam generator module are sub-saturated water and hot turbine exhaust, with the module outputs being cooled stack gas and superheated steam. Pressure drops were set at one-half psi in all three exchangers for the low-pressure turbine-exhaust stream, five psi for the water stream in the economizer and two psi for the steam in both the boiler and the superheater.

2.3.11 Coal Gasification

No module is developed for the gasification of the coal. Doing so would have required developing a different module for each type of gasifier that is used. Instead, the coal-gas streams produced by each gasifier (listed in Table 1.1) were used as feeds to the coal-gas quench module. Modifications were made to each design to accommodate the utilities required for each type of gasification.

Chapter 3 INTERCOOLED, STEAM-INJECTED GAS TURBINE SYSTEMS

The large amount of heat which is exhausted from the stack of a simple turbine system without heat recovery represents a sizable fraction of the energy content of the fuel. Since gas-turbine systems are currently being examined for their potential use as base power generators as well as peak power generators, some heat-recovery method needs to be used to take advantage of the energy remaining in the turbine exhaust. Any heat-recovery method will increase the capital cost of a gas-turbine system, but if that system is to be used for base power generation, the increase in fuel efficiency must quickly pay back the additional capital investment.

3.1 Heat-Recovery Methods

The only methods of heat recovery that have been commercially developed to date utilize the heat remaining in the turbine exhaust to produce steam. There exist three dominant methods of using this steam to enhance system efficiency: cogeneration, combined cycle and steam injection. Cogeneration takes the steam produced from the turbine exhaust and uses it as plant steam in some other process. This method does not improve the electric power generation of the gas-turbine system but does recover the turbine-exhaust heat in a valuable form. Combined cycle produces high-pressure steam (> 1000 psia) to drive a steam turbine, which increases the electrical output of the system. Steam injection produces medium-pressure steam (300-500 psia typically) which is injected along with the fuel and air into the combustion turbine to increase the mass flow through the turbine, thereby increasing the turbine output. Each of the methods described has been commercially demonstrated and all significantly increase the efficiency of a simple turbine system.

The additional capital investment required is substantially different for

each method. With cogeneration, the capital investment is increased only by the cost of several heat exchangers which produce steam from the turbine exhaust. This method increases the fuel use efficiency with the minimum capital investment of the three, but can be implemented only where there is an on-site need for plant steam. Furthermore, the size of a cogeneration plant is limited by the need for plant steam. The combined-cycle and steam-injection methods are not dependent on a local need for plant steam as the heat energy of the steam is converted to electrical energy via an expansion turbine. Improvements in system efficiencies are approximately equal using either combined cycle or steam injection, with one study citing a 3 percentage point efficiency advantage for the steam injection system (Larson, 1987). The major difference between the two methods lies in the significantly larger capital investment for the combined cycle, as an additional turbine system is needed to produce electricity from the steam. With steam injection, no additional turbine is needed since the steam is injected into the combustion chamber of the turbine. Since steam replaces some of the excess air necessary to maintain a maximum turbine inlet temperature, the size of the air compressors is reduced and the increased power output results from the decreased compressor load.

3.2 ISTIG Heat Recovery

Of the three commercially developed methods of heat recovery, the intercooled, steam-injected gas turbine (ISTIG) method was chosen as the base case for comparison of the partial-quench and full-quench clean-up processes. Cogeneration was not a logical choice as its application is too limited. It was felt that the ISTIG method of heat recovery represented the most efficient, currently available gas-turbine system with the minimum capital investment, and hence provided the best comparison for potentially improved heat-recovery technology.

The basic process design of an ISTIG system is shown in Figure 3.1. The

Figure 3.1
Intercooled, Steam-Injected,
Gas (ISTIG) Turbine System

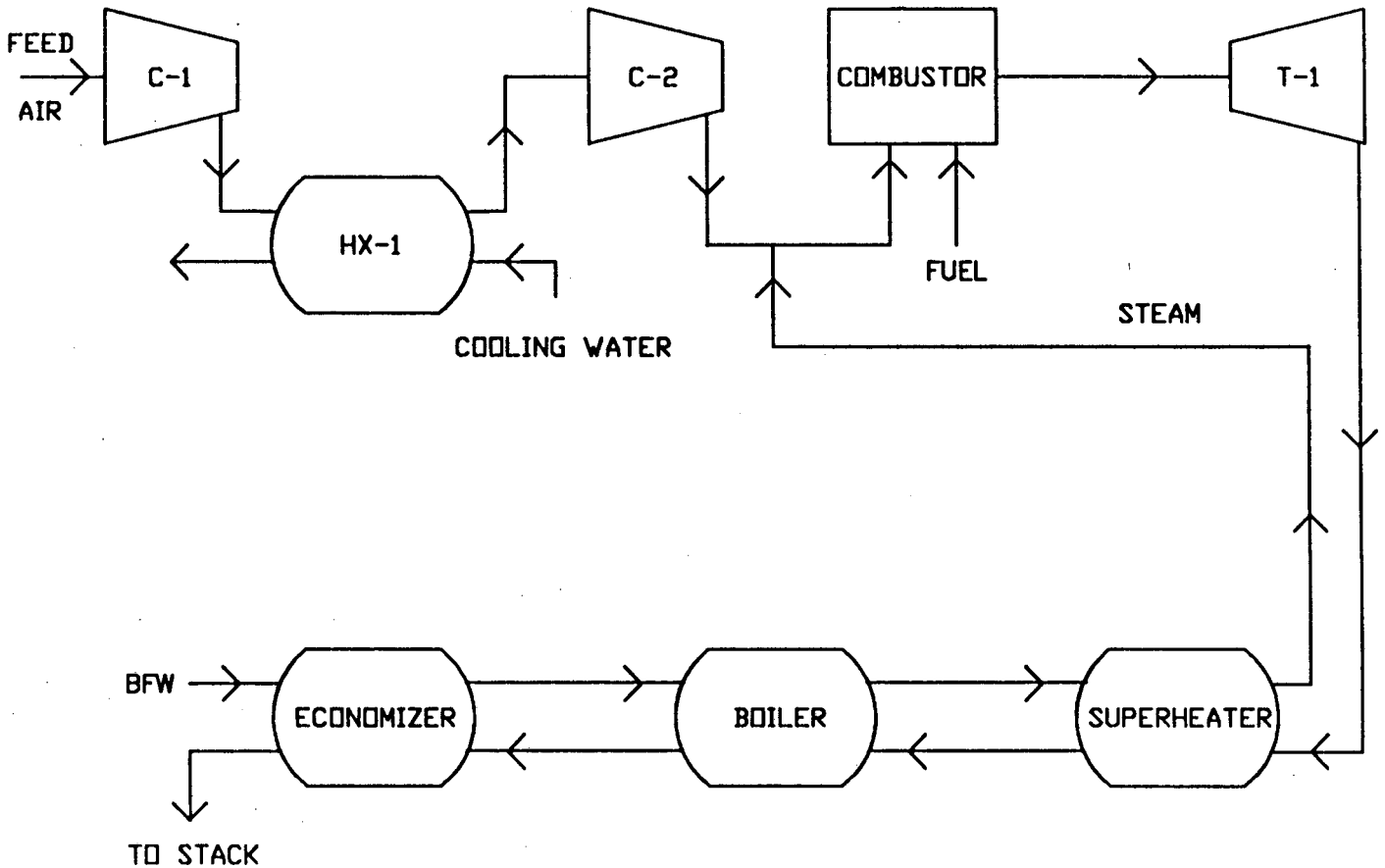

compression of the combustion air is accomplished in a series of two main compression stages, with a water intercooler between the two stages. Intercooling significantly reduces the work of compression by reducing the volume of compressed air leaving the first stage. Compressed air and steam from the heat-recovery section are mixed with the fuel gas in the combustion chamber where the fuel is burned. The hot exit stream then passes through the turbine to produce work, after which the low-pressure exhaust gas goes to the heat-recovery section.

Steam generation is accomplished in a series of three heat exchangers: an economizer, a boiler and a superheater. The economizer heats the boiler-feed water from its entering temperature up to the saturation temperature at system pressure with heat from the exhaust gases that are already mostly cooled. The boiler then accomplishes the phase change of saturated water to saturated steam with hotter exhaust gases. The steam is finally superheated to a specified approach temperature with the hottest turbine exhaust in the superheater. The amount of heat which can be removed from the turbine exhaust stream is fixed by the two temperature pinches, which occur at the hot end of the superheater and at the cold end of the boiler. These two pinches thus control the amount of superheated steam which can be produced. An approximate description of the temperature profiles in the steam-generation section is shown in Figure 3.2.

The ISTIG method of heat recovery will be included in the process design that will assess the impacts of the partial-quench and full-quench methods of coal-gas clean-up on system efficiency with the Texaco O_2 gasifier. Next the effects that different gasifiers have on an ISTIG system will be investigated using the three different gasifiers types described in Chapter 1.

3.3.0 Full-Quench / Partial-Quench Comparison

A comparison of the energy efficiencies of the full-quench and partial-

Figure 3.2
Schematic of Pinch Points
in an ISTIG Heat–Recovery Section

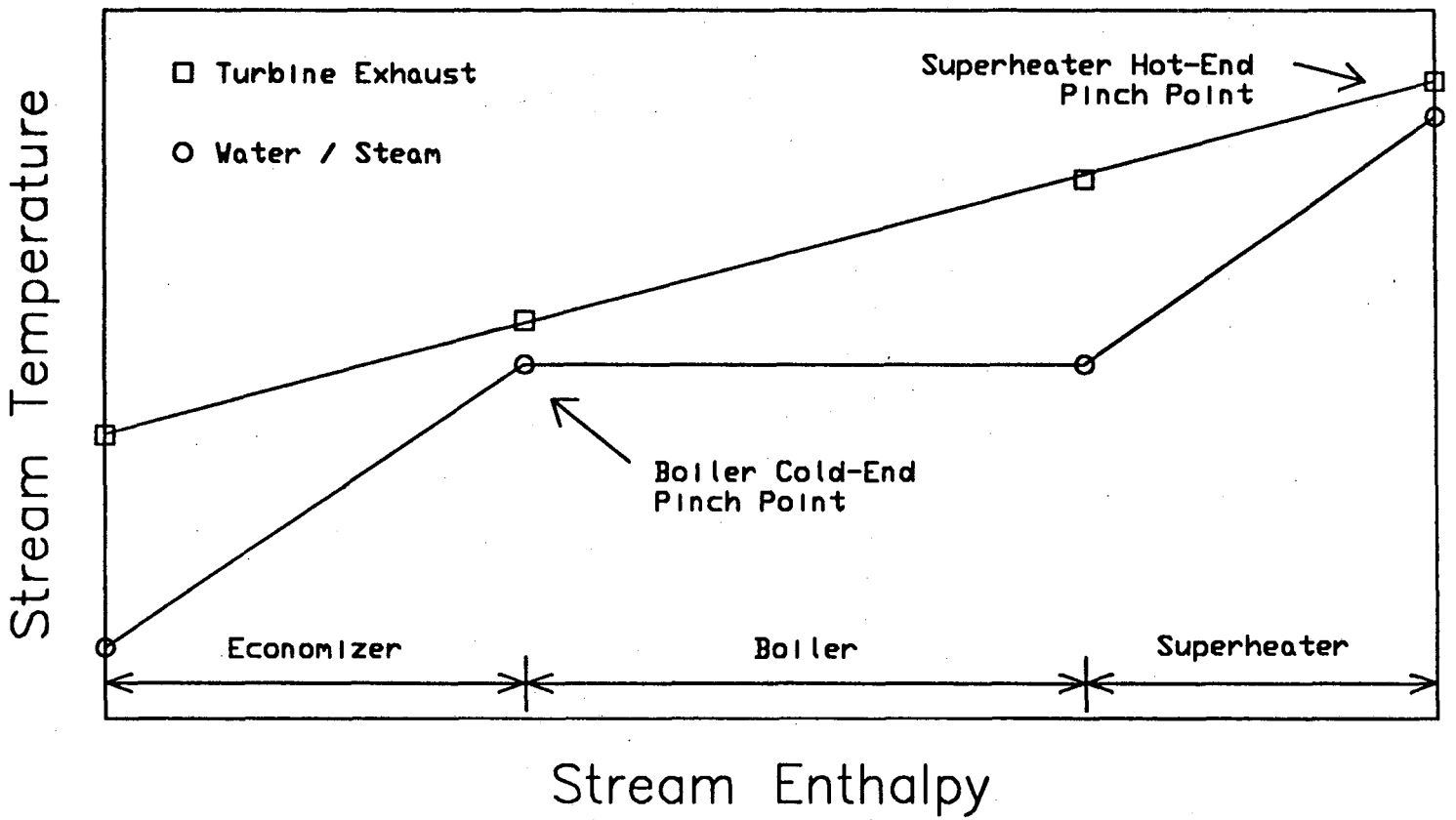

quench methods of coal-gas clean-up is accomplished using a simulation of an ISTIG turbine system that uses coal gas for a fuel. The purpose of this comparison is to investigate the impacts that the two methods have on the thermal efficiency of that ISTIG system. The partial-quench method cools the gasified coal to 1200°F by evaporating the appropriate amount of water, with the particulates (mineral content of the coal) and gaseous pollutants (mostly H_2S) being removed at the temperature of the quench. The full-quench method cools the gasified coal to around 400°F by completely saturating the coal gas at system pressure with water vapor, once again removing the particulates and the gaseous pollutants at the quench temperature.

The system pressure and relative compressor loading were varied for the ISTIG systems with both coal-gas quench methods to examine the sensitivity and to optimize the thermal efficiency of both systems with respect to each parameter. The temperature and composition of the coal gas leaving the gasifier were assumed to be independent of the system pressure. System pressure was defined as the outlet pressure of the second compressor, which is the highest pressure of any of the gaseous streams in the system. The relative compressor loading was defined as the fraction of the total work of compression, from atmospheric to system pressure, accomplished in the first-stage of air compression. These two important parameters were the only system parameters that were varied.

The results presented are for the ISTIG systems using the Texaco O_2 gasifier. As will be seen below, this gasifier does not optimize the thermal efficiency of the system but it is the type of gasifier used in the Cool Water design (EPRI, 1984). Therefore, it is used for comparing the two different clean-up methods which use the ISTIG heat-recovery system.

3.3.1 Full-Quench and Partial-Quench System Flowsheets

Figures 3.3 and 3.4 show the process configurations of the ISTIG system

using the full-quench and partial-quench methods of coal-gas clean-up. Tables 3.1.a,b and 3.2.a,b show the simulation outputs for the full-quench and partial-quench cases respectively at their optimum compressor loadings and system pressures. The stream numbers listed in column 1 of Tables 3.1.a and 3.2.a correspond to the stream numbers which are indicated in Figures 3.3 and 3.4 respectively. Columns 2 through 5 show the temperature, pressure, molar flow rate and relative enthalpy of each stream. The enthalpies shown are in relation to a zero enthalpy state that was defined for an ideal gas at 77°F and 1 atm. In the upper half of Tables 3.1.a and 3.2.a, columns 6 through 17 show the mole fractions of the individual components making up each stream. The lower half shows the molar flow rate of each component in each particular stream.

Tables 3.1.b and 3.2.b show the pertinent information for the individual units that make up the system design. The sections of Tables 3.1.b and 3.2.b that describe the overall system performance are at the bottom of each table in the section entitled "system output". The net work out is the shaft work of the turbine (T-1) minus the work of all compressors (C-1 and C-2). Since the Texaco O_2 gasifier needs a stream of oxygen, the energy penalty that is incurred by cryogenic separation is indicated. This work penalty is based on the energy requirement for air separation calculated in the Fluor report (EPRI, 1984), and is proportioned to the flow rate of coal in this study. The heat rate is the amount of energy (based on the HHV of Illinois #6 coal) that is required per kW-hr of energy produced in the form of electricity. The fraction of the total work of compression that is supplied by the first compressor (C-1) is included to show the relative loadings of the two compressors. The thermal efficiency for each simulation is, appropriately, located on the bottom line of Tables 3.1.b and 3.2.b. The thermal efficiency is the net energy output from the turbine shaft divided by the fuel energy (HHV) of the coal that was used to produce the gasified-coal feed stream. This efficiency

Figure 3.3

ISTIG Coal–Gas Turbine System, Full Quench with Texaco O_2 Gasifier

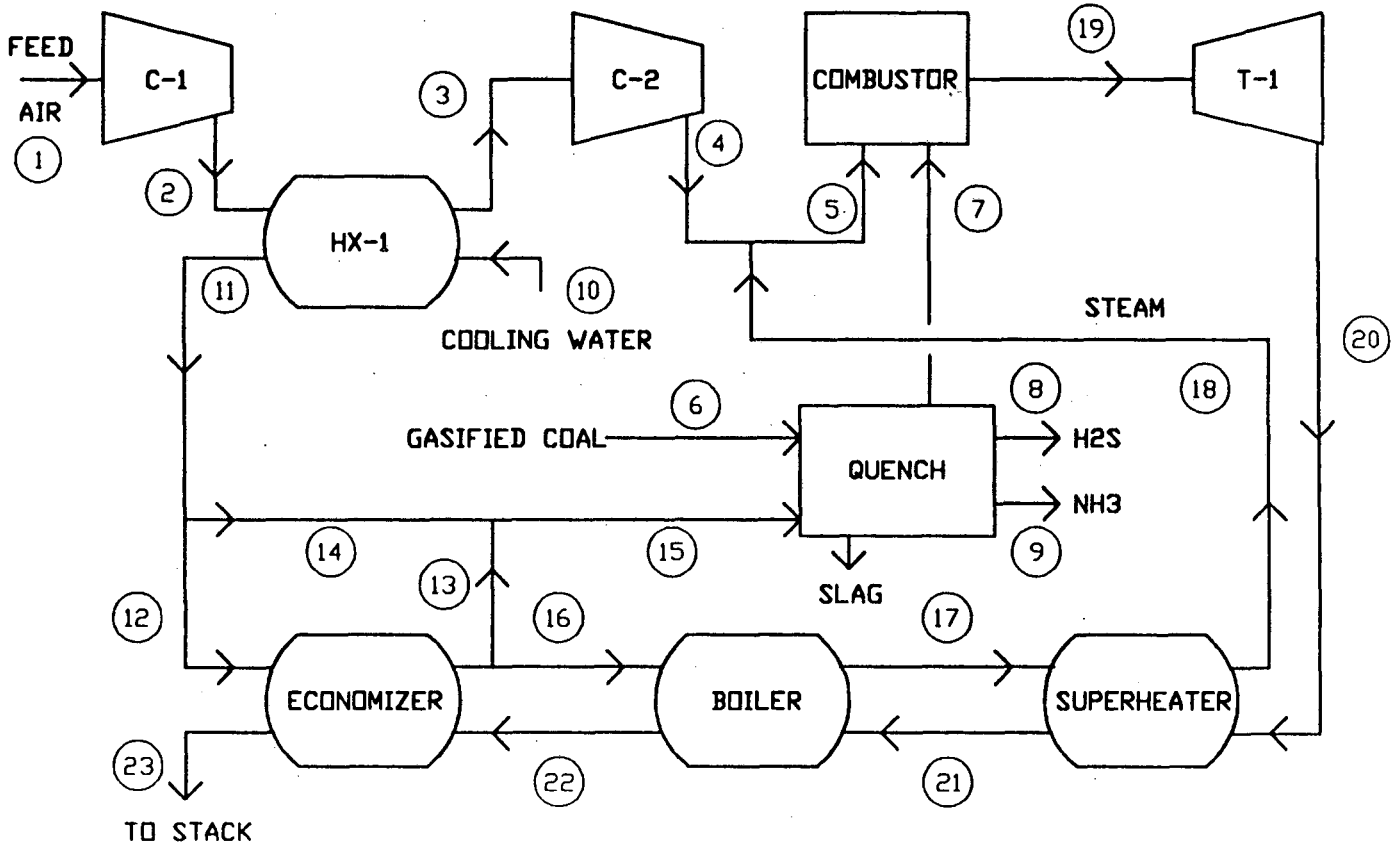

Table 3.1.a

ISTIG Full-Quench Flowsheet using Texaco O_2 Gasifier

SIMULATION OUTPUT (BASED ON 1000 SHORT TONS / DAY OF COAL)

STREAM NUMBER	TEMP (degF)	PRESS (psia)	FLOW (lbmol/sec)	ENTHALPY (Btu/sec)	STREAM MOLE FRACTIONS CH4	C2H6	CO2	H2Ov	N2	O2	Ar	CO	H2	H2S	NH3	H2Oliq
1	60.0	14.4	9.222	-1122.	.00000	.00000	.00033	.00990	.77311	.20739	.00925	.00000	.00000	.00000	.00000	.00000
2	319.9	50.0	9.222	15642.	.00000	.00000	.00033	.00990	.77311	.20739	.00925	.00000	.00000	.00000	.00000	.00000
3	85.0	48.0	9.222	406.	.00000	.00000	.00033	.00990	.77311	.20739	.00925	.00000	.00000	.00000	.00000	.00000
4	912.7	900.0	9.222	55660.	.00000	.00000	.00033	.00990	.77311	.20739	.00925	.00000	.00000	.00000	.00000	.00000
5	868.1	900.0	10.739	62275.	.00000	.00000	.00028	.14975	.66391	.17810	.00794	.00000	.00000	.00000	.00000	.00000
6	2400.0	900.0	2.625	51380.	.00080	.00000	.10790	.16490	.00680	.00000	.00910	.39620	.30260	.01000	.00170	.00000
7	461.4	900.0	6.346	13902.	.00033	.00000	.04463	.65941	.00281	.00000	.00376	.16388	.12517	.00000	.00000	.00000
8	461.4	900.0	.026	67.	.00000	.00000	.00000	.00000	.00000	.00000	.00000	.00000	.00000	1.00000	.00000	.00000
9	461.4	900.0	.004	14.	.00000	.00000	.00000	.00000	.00000	.00000	.00000	.00000	.00000	.00000	1.00000	.00000
10	60.0	914.0	5.269	-101309.	.00000	.00000	.00000	.00000	.00000	.00000	.00000	.00000	.00000	.00000	.00000	1.00000
11	219.5	909.0	5.269	-86088.	.00000	.00000	.00000	.00000	.00000	.00000	.00000	.00000	.00000	.00000	.00000	1.00000
12	219.5	909.0	5.269	-86088.	.00000	.00000	.00000	.00000	.00000	.00000	.00000	.00000	.00000	.00000	.00000	1.00000
13	532.3	904.0	3.003	-30717.	.00000	.00000	.00000	.00000	.00000	.00000	.00000	.00000	.00000	.00000	.00000	1.00000
14	.0	.0	.000	0.	.00000	.00000	.00000	.00000	.00000	.00000	.00000	.00000	.00000	.00000	.00000	.00000
15	532.3	904.0	3.003	-30717.	.00000	.00000	.00000	.00000	.00000	.00000	.00000	.00000	.00000	.00000	.00000	1.00000
16	532.3	904.0	1.517	-15516.	.00000	.00000	.00000	.00000	.00000	.00000	.00000	.00000	.00000	.00000	.00000	1.00000
17	532.0	902.0	1.517	3637.	.00000	.00000	.00000	1.00000	.00000	.00000	.00000	.00000	.00000	.00000	.00000	.00000
18	699.5	900.0	1.517	6614.	.00000	.00000	.00000	1.00000	.00000	.00000	.00000	.00000	.00000	.00000	.00000	.00000
19	2100.0	892.0	16.168	285800.	.00000	.00000	.08216	.40770	.44207	.06130	.00675	.00000	.00000	.00000	.00000	.00000
20	724.5	16.2	16.168	82495.	.00000	.00000	.08216	.40770	.44207	.06130	.00675	.00000	.00000	.00000	.00000	.00000
21	702.2	15.7	16.168	79518.	.00000	.00000	.08216	.40770	.44207	.06130	.00675	.00000	.00000	.00000	.00000	.00000
22	557.3	15.2	16.168	60365.	.00000	.00000	.08216	.40770	.44207	.06130	.00675	.00000	.00000	.00000	.00000	.00000
23	306.6	14.7	16.168	28172.	.00000	.00000	.08216	.40770	.44207	.06130	.00675	.00000	.00000	.00000	.00000	.00000

SLAG 1.959 lb/sec 987. Btu/sec

	STREAM MOLAR FLOWS											
1	.000	.000	.003	.091	7.130	1.913	.085	.000	.000	.000	.000	.000
2	.000	.000	.003	.091	7.130	1.913	.085	.000	.000	.000	.000	.000
3	.000	.000	.003	.091	7.130	1.913	.085	.000	.000	.000	.000	.000
4	.000	.000	.003	.091	7.130	1.913	.085	.000	.000	.000	.000	.000
5	.000	.000	.003	1.608	7.130	1.913	.085	.000	.000	.000	.000	.000
6	.002	.000	.283	.433	.018	.000	.024	1.040	.794	.026	.004	.000
7	.002	.000	.283	4.185	.018	.000	.024	1.040	.794	.000	.000	.000
8	.000	.000	.000	.000	.000	.000	.000	.000	.000	.026	.000	.000
9	.000	.000	.000	.000	.000	.000	.000	.000	.000	.000	.004	.000
10	.000	.000	.000	.000	.000	.000	.000	.000	.000	.000	.000	5.269
11	.000	.000	.000	.000	.000	.000	.000	.000	.000	.000	.000	5.269
12	.000	.000	.000	.000	.000	.000	.000	.000	.000	.000	.000	5.269
13	.000	.000	.000	.000	.000	.000	.000	.000	.000	.000	.000	3.003
14	.000	.000	.000	.000	.000	.000	.000	.000	.000	.000	.000	.000
15	.000	.000	.000	.000	.000	.000	.000	.000	.000	.000	.000	3.003
16	.000	.000	.000	.000	.000	.000	.000	.000	.000	.000	.000	1.517
17	.000	.000	.000	1.517	.000	.000	.000	.000	.000	.000	.000	.000
18	.000	.000	.000	1.517	.000	.000	.000	.000	.000	.000	.000	.000
19	.000	.000	1.328	6.592	7.148	.991	.109	.000	.000	.000	.000	.000
20	.000	.000	1.328	6.592	7.148	.991	.109	.000	.000	.000	.000	.000
21	.000	.000	1.328	6.592	7.148	.991	.109	.000	.000	.000	.000	.000
22	.000	.000	1.328	6.592	7.148	.991	.109	.000	.000	.000	.000	.000
23	.000	.000	1.328	6.592	7.148	.991	.109	.000	.000	.000	.000	.000

Table 3.1.b

ISTIG Full-Quench Units Output using Texaco O_2 Gasifier

```
COMPRESSOR # 1
     # OF STAGES =  10     PRESSURE RATIO =      3.472     COMPRESSOR EFFICIENCY =  .868
     WORK OF COMPRESSION =     16807. Btu/sec

COMPRESSOR # 2
     # OF STAGES =  10     PRESSURE RATIO =     18.750     COMPRESSOR EFFICIENCY =  .868
     WORK OF COMPRESSION =     55471. Btu/sec

TOTAL WORK OF COMPRESSION =       72279. Btu/sec,   76.3 MW

TURBINE RESULTS:
     # OF STAGES =  10     EXPANSION RATIO =     55.062     TURBINE EFFICIENCY =  .880
     TURBINE WORK =    203387. Btu/sec,  214.6 MW

HEAT EXCHANGER # 1          CALCULATED UA =    280.662
     APPROACH TEMPERATURE AT HOT INLET  =  100.4 F       APPROACH TEMPERATURE AT HOT OUTLET =   25.0 F
     HOT STREAM DELTA P =  2.0 PSIA      COLD STREAM DELTA P =  5.0 PSIA

COMBUSTOR OUTPUT
     AIRRATIO =  1.439          FINAL H2ORATIO =  .1762
     FUEL INLET TEMPERATURE =   461.4 F     WET AIR INLET TEMPERATURE =   868.1 F     TURBINE INLET TEMPERATURE =  2100.0 F

STEAM GENERATOR OUTPUT
     HX 1     DELTA P WATER =  5.0   DELTA P GAS =   .5   MINIMUM APPROACH TEMP = 25.0 F
     HX 2     DELTA P WATER =  2.0   DELTA P GAS =   .5   MINIMUM APPROACH TEMP = 25.0 F
     HX 3     DELTA P WATER =  2.0   DELTA P GAS =   .5   MINIMUM APPROACH TEMP = 25.0 F
     STACK GAS TEMPERATURE =    306.6 F
     MAXIMUM STEAM TEMPERATURE =    699.5 F
     STEAM FLOW RATE =      1.52 LB-MOLES

GASIFIED COAL QUENCH OUTPUT
     GASIFIED COAL INLET TEMPERATURE =  2400.0 deg F     QUENCHED GAS EXIT TEMPERATURE =   461.4 deg F
     AMOUNT OF H2S REMOVED =  .0263 lbmol/sec            AMOUNT OF NH3 REMOVED =  .0045 lbmol/sec
     WATER EVAPORATED IN THE GASIFIED COAL QUENCH =  3.003 lbmol/sec


SYSTEM OUTPUT

     NET WORK OUT =      131109. Btu/sec,  138.3 MW

     ENERGY PENALTY FOR OXYGEN USED IN GASIFICATION =    11990. Btu/sec,   12.65 MW

     HEAT RATE =    8470. Btu / kWhr

     FRACTION OF TOTAL COMPRESSION WORK ACCOMPLISHED IN COMPRESSOR NO.1 =  .2325

     SYSTEM EFFICIENCY ( BASED ON ILLINOIS COAL NO.6, 12774 Btu/lb DRY HHV ) =    39.78 %
```

Figure 3.4

ISTIG Coal–Gas Turbine System, Partial Quench with Texaco O_2 Gasifier

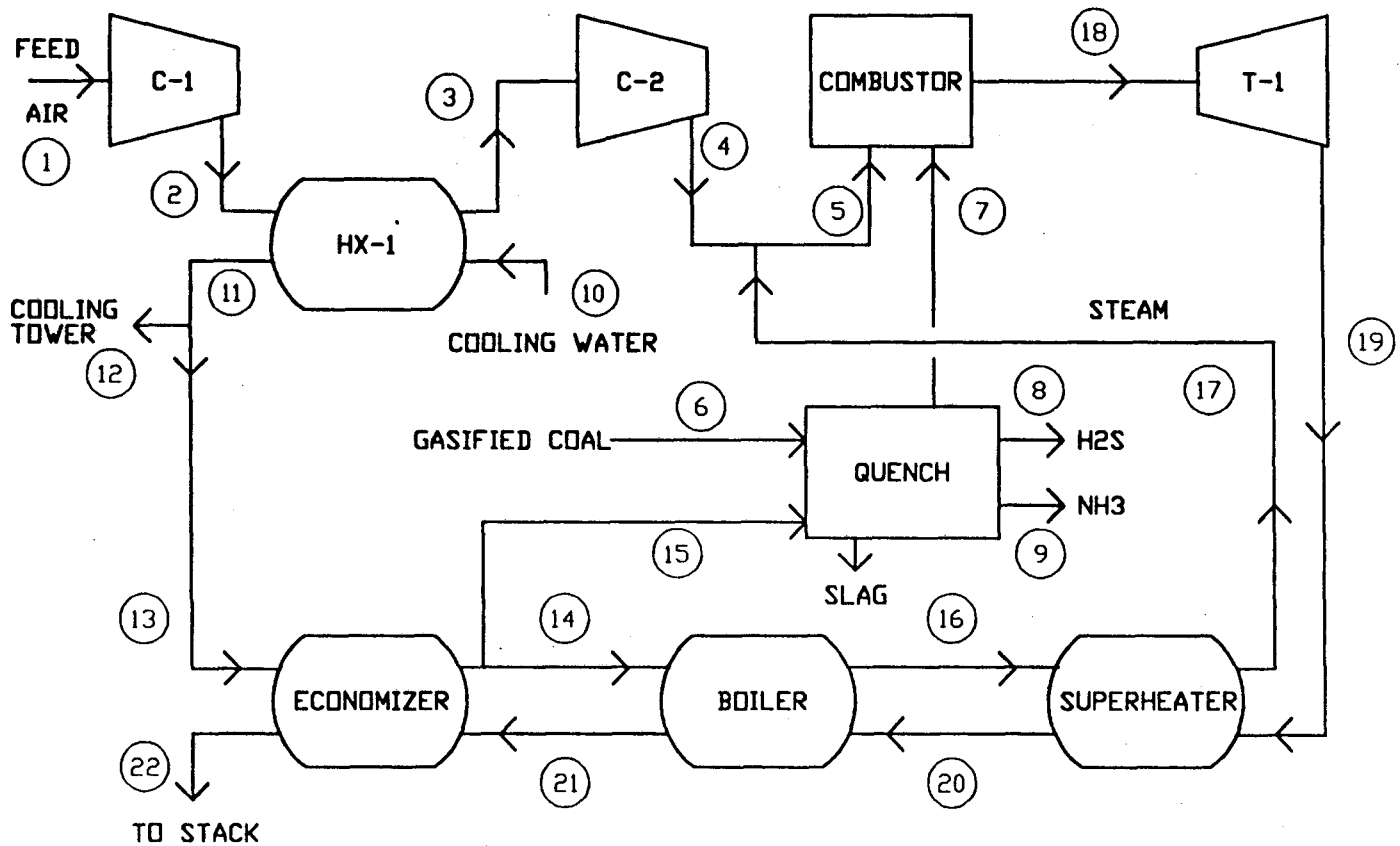

Table 3.2.a

ISTIG Partial-Quench Flowsheet using Texaco O_2 Gasifier

SIMULATION OUTPUT (BASED ON 1000 SHORT TONS / DAY OF COAL)

STREAM NUMBER	TEMP (degF)	PRESS (psia)	FLOW (lbmol/sec)	ENTHALPY (Btu/sec)	STREAM MOLE FRACTIONS CH4	C2H6	CO2	H2Ov	N2	O2	Ar	CO	H2	H2S	NH3	H2Oliq
1	60.0	14.4	14.072	-1712.	.00000	.00000	.00033	.00990	.77311	.20739	.00925	.00000	.00000	.00000	.00000	.00000
2	265.8	40.0	14.072	18500.	.00000	.00000	.00033	.00990	.77311	.20739	.00925	.00000	.00000	.00000	.00000	.00000
3	85.0	38.0	14.072	655.	.00000	.00000	.00033	.00990	.77311	.20739	.00925	.00000	.00000	.00000	.00000	.00000
4	846.0	600.0	14.072	77750.	.00000	.00000	.00033	.00990	.77311	.20739	.00925	.00000	.00000	.00000	.00000	.00000
5	825.9	600.0	16.746	91995.	.00000	.00000	.00028	.16797	.64968	.17428	.00777	.00000	.00000	.00000	.00000	.00000
6	2400.0	600.0	2.625	51380.	.00080	.00000	.10790	.16490	.00680	.00000	.00910	.39620	.30260	.01000	.00170	.00000
7	1200.0	600.0	3.988	36396.	.00053	.00000	.07102	.45802	.00448	.00000	.00599	.26079	.19918	.00000	.00000	.00000
8	1200.0	600.0	.026	269.	.00000	.00000	.00000	.00000	.00000	.00000	.00000	.00000	.00000	1.00000	.00000	.00000
9	1200.0	600.0	.004	54.	.00000	.00000	.00000	.00000	.00000	.00000	.00000	.00000	.00000	.00000	1.00000	.00000
10	60.0	610.0	5.480	-105367.	.00000	.00000	.00000	.00000	.00000	.00000	.00000	.00000	.00000	.00000	.00000	1.00000
11	239.7	605.0	5.480	-87538.	.00000	.00000	.00000	.00000	.00000	.00000	.00000	.00000	.00000	.00000	.00000	1.00000
12	239.7	605.0	1.413	-22567.	.00000	.00000	.00000	.00000	.00000	.00000	.00000	.00000	.00000	.00000	.00000	1.00000
13	239.7	605.0	4.067	-64971.	.00000	.00000	.00000	.00000	.00000	.00000	.00000	.00000	.00000	.00000	.00000	1.00000
14	486.5	604.0	2.673	-29992.	.00000	.00000	.00000	.00000	.00000	.00000	.00000	.00000	.00000	.00000	.00000	1.00000
15	486.5	604.0	1.394	-15636.	.00000	.00000	.00000	.00000	.00000	.00000	.00000	.00000	.00000	.00000	.00000	1.00000
16	486.1	602.0	2.673	6178.	.00000	.00000	.00000	1.00000	.00000	.00000	.00000	.00000	.00000	.00000	.00000	.00000
17	767.3	600.0	2.673	14244.	.00000	.00000	.00000	1.00000	.00000	.00000	.00000	.00000	.00000	.00000	.00000	.00000
18	2100.0	592.0	19.817	338090.	.00000	.00000	.06711	.27441	.54991	.10078	.00777	.00000	.00000	.00000	.00000	.00000
19	792.3	16.2	19.817	109220.	.00000	.00000	.06711	.27441	.54991	.10078	.00777	.00000	.00000	.00000	.00000	.00000
20	741.9	15.7	19.817	101154.	.00000	.00000	.06711	.27441	.54991	.10078	.00777	.00000	.00000	.00000	.00000	.00000
21	511.5	15.2	19.817	64984.	.00000	.00000	.06711	.27441	.54991	.10078	.00777	.00000	.00000	.00000	.00000	.00000
22	385.1	14.7	19.817	45641.	.00000	.00000	.06711	.27441	.54991	.10078	.00777	.00000	.00000	.00000	.00000	.00000

SLAG 1.959 lb/sec 975. Btu/sec

STREAM NUMBER	STREAM MOLAR FLOWS CH4	C2H6	CO2	H2Ov	N2	O2	Ar	CO	H2	H2S	NH3	H2Oliq
1	.000	.000	.005	.139	10.879	2.918	.130	.000	.000	.000	.000	.000
2	.000	.000	.005	.139	10.879	2.918	.130	.000	.000	.000	.000	.000
3	.000	.000	.005	.139	10.879	2.918	.130	.000	.000	.000	.000	.000
4	.000	.000	.005	.139	10.879	2.918	.130	.000	.000	.000	.000	.000
5	.000	.000	.005	2.813	10.879	2.918	.130	.000	.000	.000	.000	.000
6	.002	.000	.283	.433	.018	.000	.024	1.040	.794	.026	.004	.000
7	.002	.000	.283	1.827	.018	.000	.024	1.040	.794	.000	.000	.000
8	.000	.000	.000	.000	.000	.000	.000	.000	.000	.026	.000	.000
9	.000	.000	.000	.000	.000	.000	.000	.000	.000	.000	.004	.000
10	.000	.000	.000	.000	.000	.000	.000	.000	.000	.000	.000	5.480
11	.000	.000	.000	.000	.000	.000	.000	.000	.000	.000	.000	5.480
12	.000	.000	.000	.000	.000	.000	.000	.000	.000	.000	.000	1.413
13	.000	.000	.000	.000	.000	.000	.000	.000	.000	.000	.000	4.067
14	.000	.000	.000	.000	.000	.000	.000	.000	.000	.000	.000	2.673
15	.000	.000	.000	.000	.000	.000	.000	.000	.000	.000	.000	1.394
16	.000	.000	.000	2.673	.000	.000	.000	.000	.000	.000	.000	.000
17	.000	.000	.000	2.673	.000	.000	.000	.000	.000	.000	.000	.000
18	.000	.000	1.330	5.438	10.897	1.997	.154	.000	.000	.000	.000	.000
19	.000	.000	1.330	5.438	10.897	1.997	.154	.000	.000	.000	.000	.000
20	.000	.000	1.330	5.438	10.897	1.997	.154	.000	.000	.000	.000	.000
21	.000	.000	1.330	5.438	10.897	1.997	.154	.000	.000	.000	.000	.000
22	.000	.000	1.330	5.438	10.897	1.997	.154	.000	.000	.000	.000	.000

Table 3.2.b

ISTIG Partial-Quench Units Output using Texaco O_2 Gasifier

```
COMPRESSOR # 1
     # OF STAGES =  10     PRESSURE RATIO =      2.778     COMPRESSOR EFFICIENCY =  .868
     WORK OF COMPRESSION =     20265. Btu/sec

COMPRESSOR # 2
     # OF STAGES =  10     PRESSURE RATIO =     15.789     COMPRESSOR EFFICIENCY =  .868
     WORK OF COMPRESSION =     77375. Btu/sec

TOTAL WORK OF COMPRESSION =       97640. Btu/sec,  103.0 MW

TURBINE RESULTS:
     # OF STAGES =  10     EXPANSION RATIO =     36.543     TURBINE EFFICIENCY =  .880
     TURBINE WORK =    228890. Btu/sec,  241.5 MW

HEAT EXCHANGER # 1          CALCULATED UA =    697.904
     APPROACH TEMPERATURE AT HOT INLET  =   26.1 F       APPROACH TEMPERATURE AT HOT OUTLET =   25.0 F
     HOT STREAM DELTA P =  2.0 PSIA      COLD STREAM DELTA P =  5.0 PSIA

COMBUSTOR OUTPUT
     AIRRATIO =  3.494          FINAL H2ORATIO =  .2019
     FUEL INLET TEMPERATURE =  1200.0 F     WET AIR INLET TEMPERATURE =   825.9 F     TURBINE INLET TEMPERATURE =  2100.0 F

STEAM GENERATOR OUTPUT
     HX 1     DELTA P WATER =  5.0   DELTA P GAS =   .5   MINIMUM APPROACH TEMP = 25.0 F
     HX 2     DELTA P WATER =  2.0   DELTA P GAS =   .5   MINIMUM APPROACH TEMP = 25.0 F
     HX 3     DELTA P WATER =  2.0   DELTA P GAS =   .5   MINIMUM APPROACH TEMP = 25.0 F
     STACK GAS TEMPERATURE =    385.1 F
     MAXIMUM STEAM TEMPERATURE =    767.3 F
     STEAM FLOW RATE =      2.67 lbmol/sec

GASIFIED COAL QUENCH OUTPUT
     GASIFIED COAL INLET TEMPERATURE =  2400.0 deg F     QUENCHED GAS EXIT TEMPERATURE =  1200.0 deg F
     AMOUNT OF H2S REMOVED =  .0263 lbmol/sec            AMOUNT OF NH3 REMOVED =  .0045 lbmol/sec
     WATER EVAPORATED IN THE GASIFIED COAL QUENCH =  1.394 lbmol/sec

SYSTEM OUTPUT

     NET WORK OUT =      131249. Btu/sec,  138.5 MW

     ENERGY PENALTY FOR OXYGEN USED IN GASIFICATION =    11592. Btu/sec,   12.23 MW

     HEAT RATE =    8432. Btu / kWhr

     FRACTION OF TOTAL COMPRESSION WORK ACCOMPLISHED IN COMPRESSOR NO.1 =  .2075

     SYSTEM EFFICIENCY ( BASED ON ILLINOIS COAL NO.6, 12774 Btu/lb DRY HHV ) =    39.95 %
```

Figure 3.5

Variation of ISTIG System Efficiency* with Compressor Loading

Texaco O_2–Gasifier (Full–Quench) Case

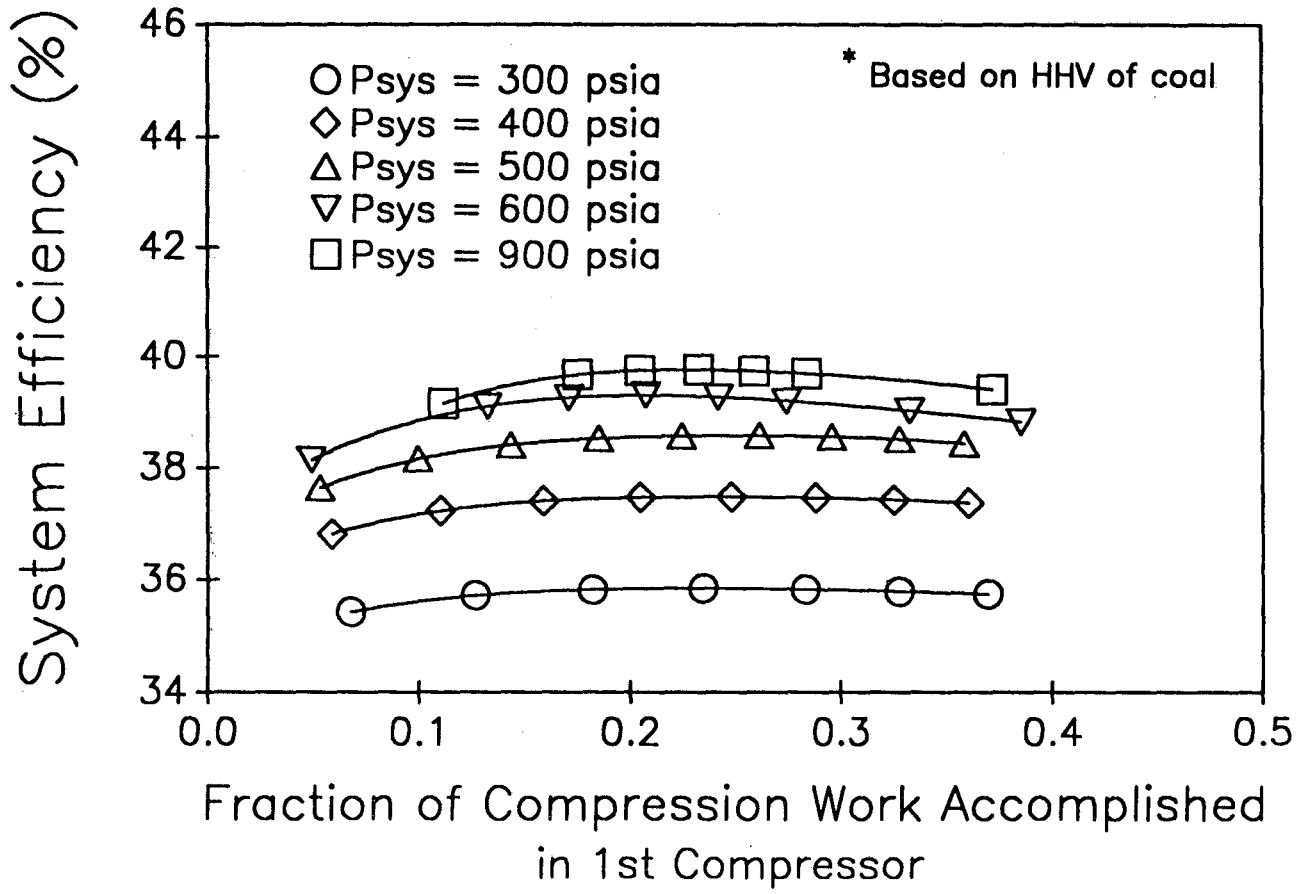

Figure 3.6

Variation of ISTIG System Efficiency* with Compressor Loading

Texaco O_2–Gasifier (Partial–Quench) Case

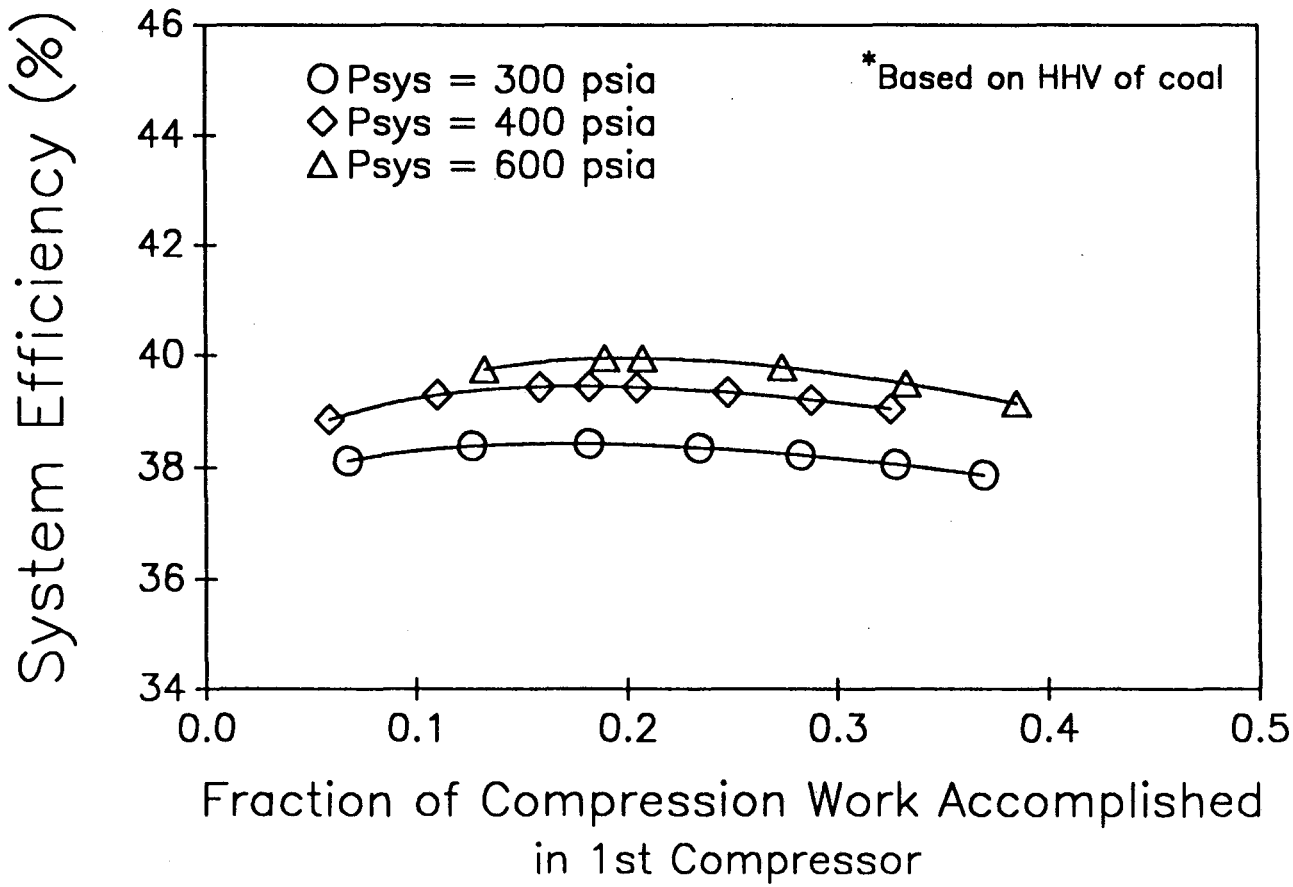

includes an allowance for the energy loss involved in the gasification step.

Figures 3.5 and 3.6 show the effects of compressor loading on the system efficiency for the full-quench and partial-quench cases respectively. The compressor loading is varied to encompass the optimum compressor loading with a broad range of compressor loadings. The system pressures used in each case range from a low of 300 psia to the higher system pressure that optimized the thermal efficiency of the system. Figure 3.7 compares the effect of system pressure on thermal efficiency for both cases, with the optimal compressor loading being used at each system pressure.

3.3.2 Effect of Compressor Loading

As can be seen in Figures 3.5 and 3.6, system efficiency is a weak function of compressor loading, going through a smooth maximum when the first compressor supplies approximately 25 and 20 percent of the total work of compression in the full-quench and partial-quench cases respectively. This maximum represents a trade-off between the beneficial effects of intercooling (reducing the total work of compression) and generating more heated water in the compressor intercooler than can be utilized by the system. When the first-stage compressor accomplishes only a small fraction of the total compression, the compression train begins to resemble one compression stage with no intercooling. When the first-stage compressor begins to supply too large a fraction of the total compression required, the heated water flow leaving the intercooler exceeds the system's requirement for preheated water and thus heat is lost from the system. The full-quench case reaches its maximum at a higher compressor loading in the first-stage compressor because more heated water is consumed by the full-quench system.

3.3.3 Effect of System Pressure

System pressure has a very significant effect on the thermal efficiency in both systems as is seen in Figure 3.7. The full-quench case goes through a

Figure 3.7

Variation of ISTIG Coal–Gas System Efficiency* with System Pressure

Texaco O_2–Gasifier Case at Optimal Compressor Loading

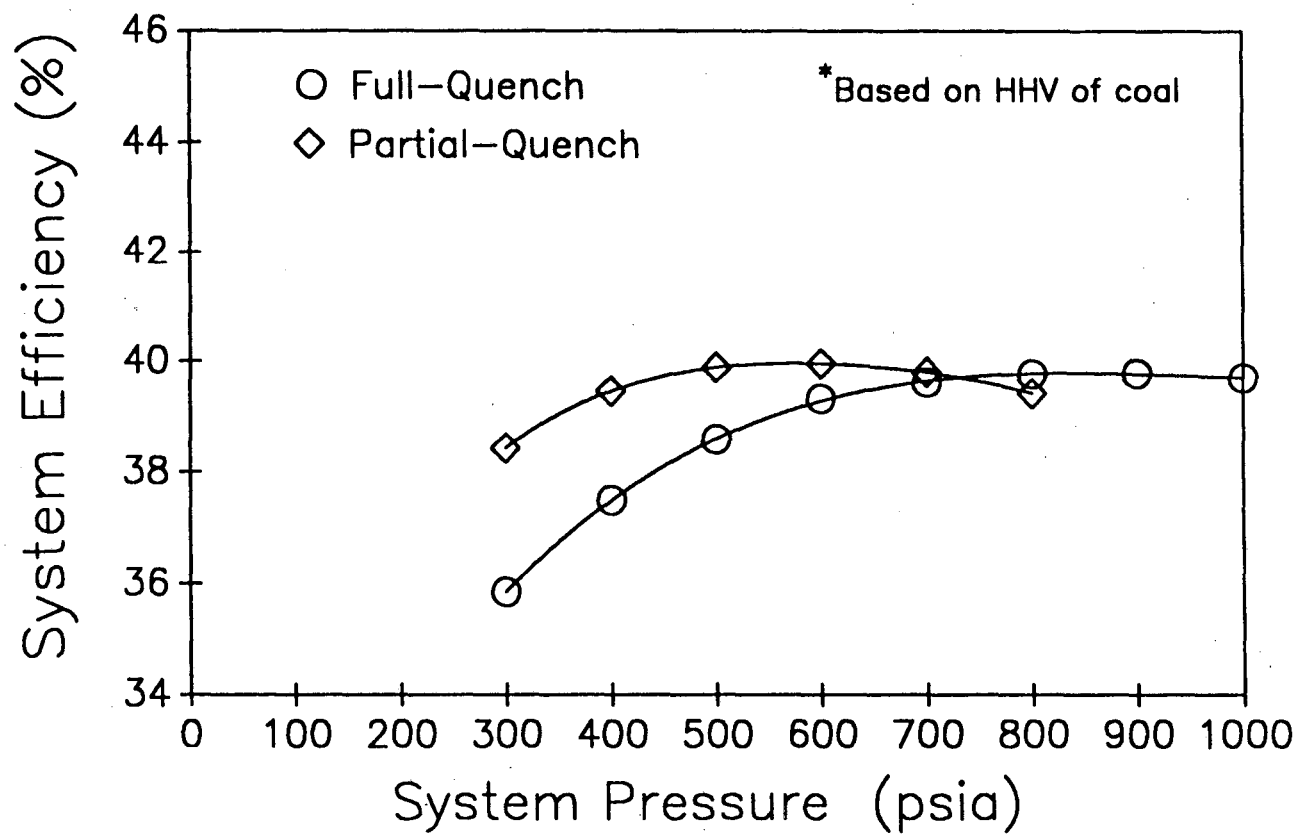

maximum in thermal efficiency at a system pressure of about 900 psia; the partial-quench at about 600 psia. Since the full-quench case reaches its maximum thermal efficiency at an unusually high system pressure, the thermal efficiency of the full-quench case was only investigated to a pressure (1000 psia) slightly past the maximum in thermal efficiency. The partial-quench case is studied at pressures that show system performance at pressures that well encompass the optimum, both on the higher and lower pressure sides of the optimum.

3.3.4 Analysis of System Performance

The optimization of system performance in both cases can be traced to the steam production in the heat-recovery section and the effects that this steam flow has on the entire system. As mentioned previously, the steam production in the heat recovery section is controlled by two temperature pinches, one of which occurs at the hot end of the steam superheater and the other at the cold end of the steam boiler. Varying the system pressure changes the expansion ratio of the turbine, since in all cases the turbine exhaust is expanded to slightly above atmospheric pressure regardless of the system pressure. With the inlet temperature of the turbine being fixed at the maximum allowable temperature that the turbine can handle, the exhaust temperature of the turbine decreases with increasing system pressure due to a larger expansion ratio. Increasing turbine-exhaust temperature raises the temperature at which the temperature pinch occurs at the hot end of the steam superheater, thus allowing for greater steam production.

At system pressures lower than the optimum, steam production is relatively large. With large amounts of steam being injected into the combustor, less excess compressed air is required and the turbine exhaust has a higher fraction of water vapor (at 300 psia, the water-vapor content is 37 percent in the partial-quench case and 52 percent in the full-quench case). Water vapor that leaves the system out the stack takes with it the energy required to vaporize the water. At system

pressures higher than the optimum, the boiler pinch temperature is too high and steam production is reduced, causing heat to be lost from the system in the form of a high stack temperature (445°F at 800 psia in the partial-quench case). At the optimal pressure the system reaches the best balance between sensible heat lost in the stack exhaust in the form of high stack temperature or latent heat lost because of high water-vapor content.

3.3.5 Differences in Optimal Pressure

A significant difference exists between the optimum system pressure for the full-quench and partial-quench cases. This difference can largely be attributed to the amount of water evaporated by each method to cool the coal gas in the quench stage. At 300 psia, the full-quench case has 115 percent more water evaporated in the quench stage than the partial-quench case, resulting in a 14 percent higher amount of water vapor in the stack gas. The optimal heat balance between the temperature and the water vapor content of the stack gas shifts to a significantly higher pressure in the full-quench case. Additionally, at higher pressures the partial-quench case cannot use all the water that is heated in the compressor intercooler and sends a significant fraction to a cooling tower. The full-quench case uses all the water heated in the compressor intercooler regardless of the system pressure and thus does not show as marked a decline in thermal efficiency at higher pressures as does the partial-quench case.

3.4.0 Gasifier Comparisons using an ISTIG System

Various methods of coal gasification produce significantly different coal-gas streams, as was shown in the introduction of this study. To optimize the performance of a coal-gas system, it is necessary to use the gasifier which results in the highest thermal efficiency. Coal-gas streams from the three different gasifiers discussed in Chapter 1 are used as the feeds for an ISTIG coal-gas system using a partial quench. Since the partial-quench method results in superior system

performance for the ISTIG system using the Texaco gasifier, the results presented in this section use only the partial-quench method of coal-gas clean-up to compare the different gasifiers. For example, using the Texaco O_2 gasifier at a system pressure of 500 psia, the partial-quench method results in a system efficiency which is higher by 1.3 percentage points over that of the full-quench method.

3.4.1 Texaco O_2 Gasifier

To make an accurate comparison of the ISTIG coal-gas system using different coal-gas feeds, it is necessary to include the requirements for each type of gasifier into the system design. The Texaco gasifier uses preheated water and 95 percent O_2 in addition to coal as feeds to the gasifier. Since the ISTIG design produces excess heated water in the compressor intercooler, the only significant energy penalty for the gasifier is the energy required to operate the cryogenic air-separation plant. This penalty is accounted for by subtracting the energy for air separation from the net turbine work (turbine work minus compression work), which is divided by the energy content of the feed coal to determine the system efficiency. The energy required to operate the air-separation plant is taken from the Fluor scale-up of the Cool Water design (EPRI, 1984). The maximum thermal efficiency that is obtained using the Texaco gasifier with the partial quench is 40.0 percent at optimal compressor loading and a system pressure of 600 psia.

3.4.2 Fluid-Bed Gasifier Requirements

Figures 3.8 and 3.9 show the process configurations used for fluid-bed gasifiers that use 95 percent O_2 and air respectively as the source of combustion oxygen. Tables 3.3.a,b and 3.4.a,b show the simulation outputs for the fluid-bed O_2 and fluid-bed air systems at optimal system pressure and compressor loading. Both fluid-bed designs require high-temperature steam flows to the gasifier, which are split off from the steam generated in the heat-recovery section. The penalty for O_2 production for the fluid-bed O_2 case was accounted for in the same way as

Figure 3.8

ISTIG Coal–Gas Turbine System, Partial–Quench with Fluid–Bed O_2 Gasifier

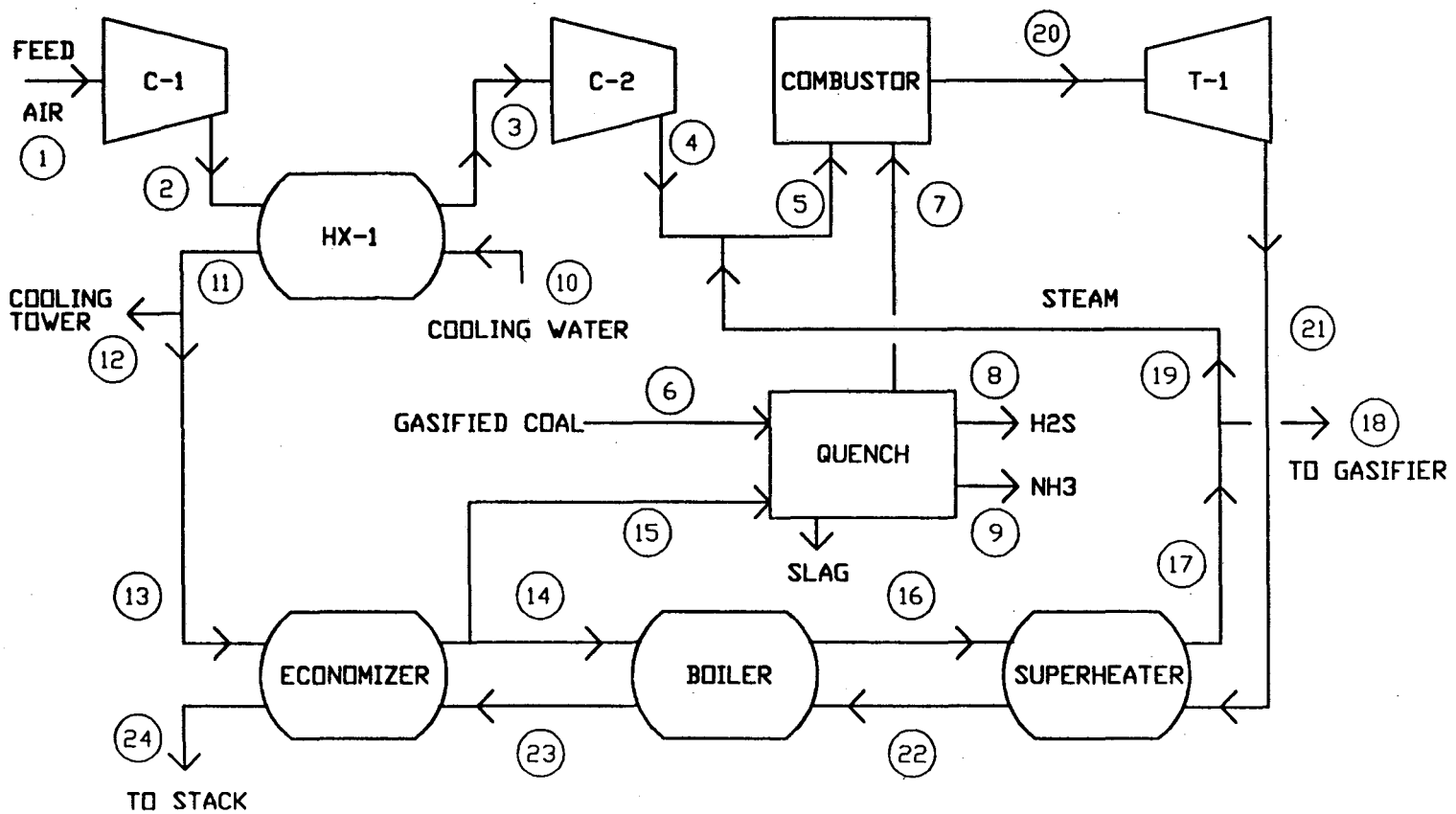

Table 3.3.a

ISTIG Partial-Quench Flowsheet using Fluid-Bed O_2 Gasifier

SIMULATION OUTPUT (BASED ON 1000 SHORT TONS / DAY OF COAL)

STREAM NUMBER	TEMP (degF)	PRESS (psia)	FLOW (lbmol/sec)	ENTHALPY (Btu/sec)	STREAM MOLE FRACTIONS CH4	C2H6	CO2	H2Ov	N2	O2	Ar	CO	H2	H2S	NH3	H2Oliq
1	60.0	14.4	16.968	-2064.	.00000	.00000	.00033	.00990	.77311	.20739	.00925	.00000	.00000	.00000	.00000	.00000
2	235.0	35.0	16.968	18648.	.00000	.00000	.00033	.00990	.77311	.20739	.00925	.00000	.00000	.00000	.00000	.00000
3	85.0	33.0	16.968	810.	.00000	.00000	.00033	.00990	.77311	.20739	.00925	.00000	.00000	.00000	.00000	.00000
4	830.8	500.0	16.968	91784.	.00000	.00000	.00033	.00990	.77311	.20739	.00925	.00000	.00000	.00000	.00000	.00000
5	821.6	500.0	20.124	109929.	.00000	.00000	.00028	.16521	.65183	.17486	.00780	.00000	.00000	.00000	.00000	.00000
6	1850.0	500.0	2.044	29636.	.05777	.00000	.04682	.04383	.01693	.00000	.00000	.54376	.27592	.01278	.00219	.00000
7	1200.0	500.0	2.593	23290.	.04555	.00000	.03691	.25796	.01335	.00000	.00000	.42870	.21753	.00000	.00000	.00000
8	1200.0	500.0	.026	268.	.00000	.00000	.00000	.00000	.00000	.00000	.00000	.00000	.00000	1.00000	.00000	.00000
9	1200.0	500.0	.004	54.	.00000	.00000	.00000	.00000	.00000	.00000	.00000	.00000	.00000	.00000	1.00000	.00000
10	60.0	510.0	6.599	-126891.	.00000	.00000	.00000	.00000	.00000	.00000	.00000	.00000	.00000	.00000	.00000	1.00000
11	209.1	505.0	6.599	-109069.	.00000	.00000	.00000	.00000	.00000	.00000	.00000	.00000	.00000	.00000	.00000	1.00000
12	209.1	505.0	2.709	-44765.	.00000	.00000	.00000	.00000	.00000	.00000	.00000	.00000	.00000	.00000	.00000	1.00000
13	209.1	505.0	3.891	-64305.	.00000	.00000	.00000	.00000	.00000	.00000	.00000	.00000	.00000	.00000	.00000	1.00000
14	467.4	504.0	3.312	-38465.	.00000	.00000	.00000	.00000	.00000	.00000	.00000	.00000	.00000	.00000	.00000	1.00000
15	467.4	504.0	.579	-6727.	.00000	.00000	.00000	.00000	.00000	.00000	.00000	.00000	.00000	.00000	.00000	1.00000
16	467.0	502.0	3.312	7494.	.00000	.00000	.00000	1.00000	.00000	.00000	.00000	.00000	.00000	.00000	.00000	.00000
17	802.0	500.0	3.312	19035.	.00000	.00000	.00000	1.00000	.00000	.00000	.00000	.00000	.00000	.00000	.00000	.00000
18	802.0	500.0	.155	890.	.00000	.00000	.00000	1.00000	.00000	.00000	.00000	.00000	.00000	.00000	.00000	.00000
19	802.0	500.0	3.157	18146.	.00000	.00000	.00000	1.00000	.00000	.00000	.00000	.00000	.00000	.00000	.00000	.00000
20	2100.0	492.0	21.879	367696.	.00000	.00000	.06082	.21910	.60113	.11175	.00717	.00000	.00000	.00000	.00000	.00000
21	827.0	16.2	21.879	125265.	.00000	.00000	.06082	.21910	.60113	.11175	.00717	.00000	.00000	.00000	.00000	.00000
22	761.1	15.7	21.879	113724.	.00000	.00000	.06082	.21910	.60113	.11175	.00717	.00000	.00000	.00000	.00000	.00000
23	492.4	15.2	21.879	67765.	.00000	.00000	.06082	.21910	.60113	.11175	.00717	.00000	.00000	.00000	.00000	.00000
24	377.7	14.7	21.879	48652.	.00000	.00000	.06082	.21910	.60113	.11175	.00717	.00000	.00000	.00000	.00000	.00000

SLAG 1.959 lb/sec 705. Btu/sec

STREAM MOLAR FLOWS

1	.000	.000	.006	.168	13.118	3.519	.157	.000	.000	.000	.000	.000
2	.000	.000	.006	.168	13.118	3.519	.157	.000	.000	.000	.000	.000
3	.000	.000	.006	.168	13.118	3.519	.157	.000	.000	.000	.000	.000
4	.000	.000	.006	.168	13.118	3.519	.157	.000	.000	.000	.000	.000
5	.000	.000	.006	3.325	13.118	3.519	.157	.000	.000	.000	.000	.000
6	.118	.000	.096	.090	.035	.000	.000	1.111	.564	.026	.004	.000
7	.118	.000	.096	.669	.035	.000	.000	1.111	.564	.000	.000	.000
8	.000	.000	.000	.000	.000	.000	.000	.000	.000	.026	.000	.000
9	.000	.000	.000	.000	.000	.000	.000	.000	.000	.000	.004	.000
10	.000	.000	.000	.000	.000	.000	.000	.000	.000	.000	.000	6.599
11	.000	.000	.000	.000	.000	.000	.000	.000	.000	.000	.000	6.599
12	.000	.000	.000	.000	.000	.000	.000	.000	.000	.000	.000	2.709
13	.000	.000	.000	.000	.000	.000	.000	.000	.000	.000	.000	3.891
14	.000	.000	.000	.000	.000	.000	.000	.000	.000	.000	.000	3.312
15	.000	.000	.000	.000	.000	.000	.000	.000	.000	.000	.000	.579
16	.000	.000	.000	3.312	.000	.000	.000	.000	.000	.000	.000	.000
17	.000	.000	.000	3.312	.000	.000	.000	.000	.000	.000	.000	.000
18	.000	.000	.000	.155	.000	.000	.000	.000	.000	.000	.000	.000
19	.000	.000	.000	3.157	.000	.000	.000	.000	.000	.000	.000	.000
20	.000	.000	1.331	4.794	13.152	2.445	.157	.000	.000	.000	.000	.000
21	.000	.000	1.331	4.794	13.152	2.445	.157	.000	.000	.000	.000	.000
22	.000	.000	1.331	4.794	13.152	2.445	.157	.000	.000	.000	.000	.000
23	.000	.000	1.331	4.794	13.152	2.445	.157	.000	.000	.000	.000	.000
24	.000	.000	1.331	4.794	13.152	2.445	.157	.000	.000	.000	.000	.000

Table 3.3.b

ISTIG Partial-Quench Units Output using Fluid-Bed O_2 Gasifier

```
COMPRESSOR # 1
    # OF STAGES =  10     PRESSURE RATIO =      2.431     COMPRESSOR EFFICIENCY =  .868
    WORK OF COMPRESSION =     20767. Btu/sec

COMPRESSOR # 2
    # OF STAGES =  10     PRESSURE RATIO =     15.152     COMPRESSOR EFFICIENCY =  .868
    WORK OF COMPRESSION =     91269. Btu/sec

TOTAL WORK OF COMPRESSION =      112036. Btu/sec,  118.2 MW

TURBINE RESULTS:
    # OF STAGES =  10     EXPANSION RATIO =     30.370     TURBINE EFFICIENCY =  .880
    TURBINE WORK =    242443. Btu/sec,  255.8 MW

HEAT EXCHANGER # 1          CALCULATED UA =    700.003
    APPROACH TEMPERATURE AT HOT INLET  =   25.9 F       APPROACH TEMPERATURE AT HOT OUTLET =   25.0 F
    HOT STREAM DELTA P =  2.0 PSIA      COLD STREAM DELTA P =  5.0 PSIA

COMBUSTOR OUTPUT
    AIRRATIO =  6.480          FINAL H2ORATIO =  .1979
    FUEL INLET TEMPERATURE =  1200.0 F     WET AIR INLET TEMPERATURE =   821.6 F     TURBINE INLET TEMPERATURE =  2100.0 F

STEAM GENERATOR OUTPUT
    HX 1     DELTA P WATER =  5.0   DELTA P GAS =   .5   MINIMUM APPROACH TEMP = 25.0 F
    HX 2     DELTA P WATER =  2.0   DELTA P GAS =   .5   MINIMUM APPROACH TEMP = 25.0 F
    HX 3     DELTA P WATER =  2.0   DELTA P GAS =   .5   MINIMUM APPROACH TEMP = 25.0 F
    STACK GAS TEMPERATURE =    377.7 F
    MAXIMUM STEAM TEMPERATURE =    802.0 F
    STEAM FLOW RATE =      3.31 lbmol/sec

GASIFIED COAL QUENCH OUTPUT
    GASIFIED COAL INLET TEMPERATURE =  1850.0 deg F     QUENCHED GAS EXIT TEMPERATURE =  1200.0 deg F
    AMOUNT OF H2S REMOVED =  .0261 lbmol/sec            AMOUNT OF NH3 REMOVED =  .0045 lbmol/sec
    WATER EVAPORATED IN THE GASIFIED COAL QUENCH =   .579 lbmol/sec


SYSTEM OUTPUT

    NET WORK OUT =      130408. Btu/sec,  137.6 MW

    ENERGY PENALTY FOR OXYGEN USED IN GASIFICATION =     7858. Btu/sec,    8.29 MW

    HEAT RATE =    8233. Btu / kWhr

    FRACTION OF TOTAL COMPRESSION WORK ACCOMPLISHED IN COMPRESSOR NO.1 =  .1854

    SYSTEM EFFICIENCY ( BASED ON ILLINOIS COAL NO.6, 12774 Btu/lb DRY HHV ) =    40.93 %
```

Figure 3.9
ISTIG Coal–Gas Turbine System, Partial-Quench with Fluid–Bed Air Gasifier

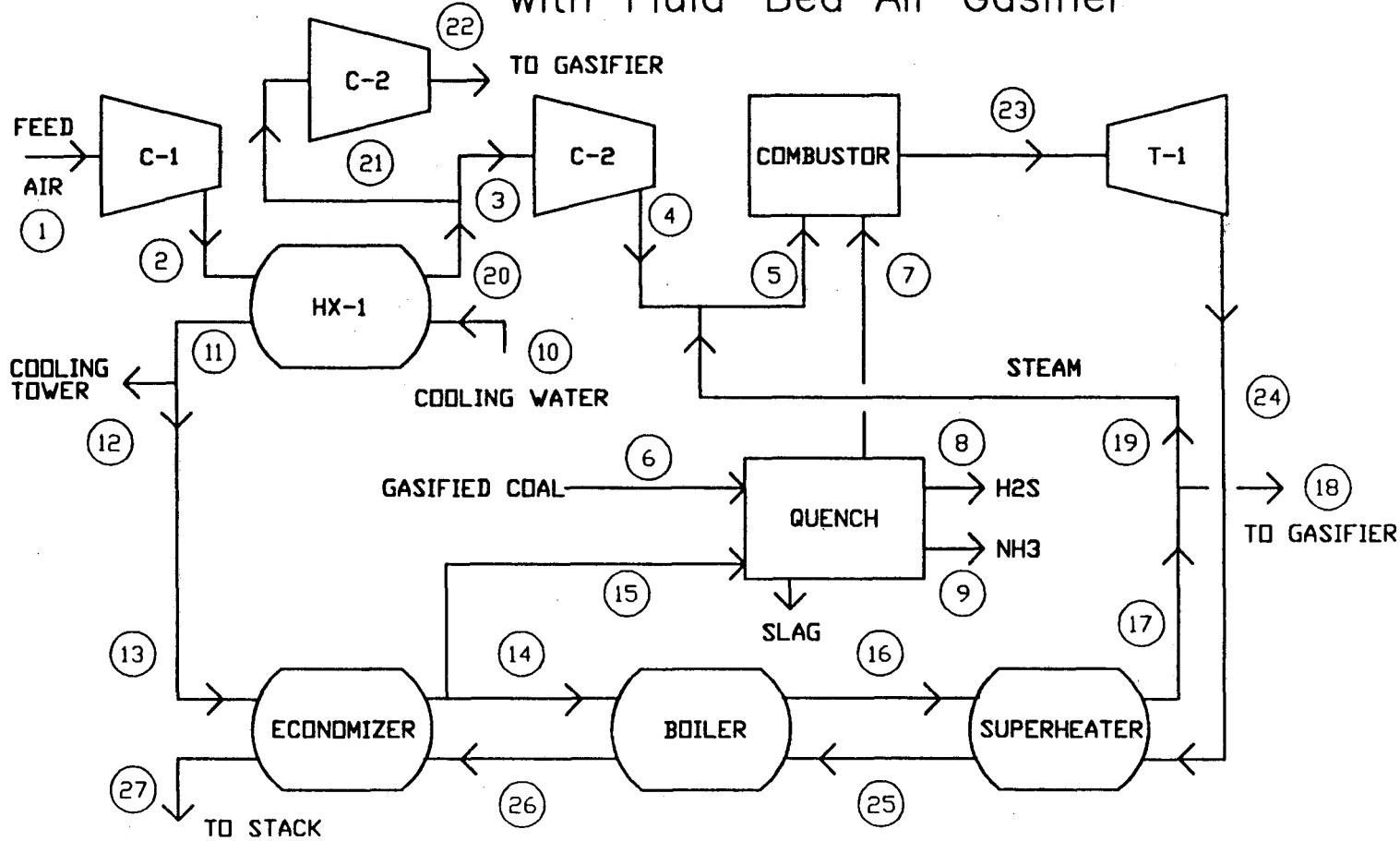

Table 3.4.a

ISTIG Partial-Quench Flowsheet using Fluid-Bed Air Gasifier

SIMULATION OUTPUT (BASED ON 1000 SHORT TONS / DAY OF COAL)

STREAM NUMBER	TEMP (degF)	PRESS (psia)	FLOW (lbmol/sec)	ENTHALPY (Btu/sec)	STREAM MOLE FRACTIONS CH4	C2H6	CO2	H2Ov	N2	O2	Ar	CO	H2	H2S	NH3	H2Oliq
1	60.0	14.4	15.980	-1944.	.00000	.00000	.00033	.00990	.77311	.20739	.00925	.00000	.00000	.00000	.00000	.00000
2	293.9	45.0	15.980	24171.	.00000	.00000	.00033	.00990	.77311	.20739	.00925	.00000	.00000	.00000	.00000	.00000
3	85.0	43.0	13.461	612.	.00000	.00000	.00033	.00990	.77311	.20739	.00925	.00000	.00000	.00000	.00000	.00000
4	730.0	500.0	13.461	62663.	.00000	.00000	.00033	.00990	.77311	.20739	.00925	.00000	.00000	.00000	.00000	.00000
5	741.5	500.0	16.318	79167.	.00000	.00000	.00027	.18326	.63774	.17108	.00763	.00000	.00000	.00000	.00000	.00000
6	1850.0	500.0	4.190	57878.	.00954	.00000	.03835	.04111	.48080	.00000	.00000	.26842	.15552	.00626	.00000	.00000
7	1200.0	500.0	5.250	45690.	.00761	.00000	.03060	.23978	.38369	.00000	.00000	.21421	.12411	.00000	.00000	.00000
8	1200.0	500.0	.026	269.	.00000	.00000	.00000	.00000	.00000	.00000	.00000	.00000	.00000	1.00000	.00000	.00000
9	1200.0	500.0	.000	0.	.00000	.00000	.00000	.00000	.00000	.00000	.00000	.00000	.00000	.00000	1.00000	.00000
10	60.0	510.0	6.224	-119673.	.00000	.00000	.00000	.00000	.00000	.00000	.00000	.00000	.00000	.00000	.00000	1.00000
11	267.6	505.0	6.224	-96248.	.00000	.00000	.00000	.00000	.00000	.00000	.00000	.00000	.00000	.00000	.00000	1.00000
12	267.6	505.0	2.049	-31683.	.00000	.00000	.00000	.00000	.00000	.00000	.00000	.00000	.00000	.00000	.00000	1.00000
13	267.6	505.0	4.175	-64565.	.00000	.00000	.00000	.00000	.00000	.00000	.00000	.00000	.00000	.00000	.00000	1.00000
14	467.4	504.0	3.088	-35873.	.00000	.00000	.00000	.00000	.00000	.00000	.00000	.00000	.00000	.00000	.00000	1.00000
15	467.4	504.0	1.087	-12622.	.00000	.00000	.00000	.00000	.00000	.00000	.00000	.00000	.00000	.00000	.00000	1.00000
16	467.0	502.0	3.088	6989.	.00000	.00000	.00000	1.00000	.00000	.00000	.00000	.00000	.00000	.00000	.00000	.00000
17	804.8	500.0	3.088	17839.	.00000	.00000	.00000	1.00000	.00000	.00000	.00000	.00000	.00000	.00000	.00000	.00000
18	804.8	500.0	.231	1335.	.00000	.00000	.00000	1.00000	.00000	.00000	.00000	.00000	.00000	.00000	.00000	.00000
19	804.8	500.0	2.857	16504.	.00000	.00000	.00000	1.00000	.00000	.00000	.00000	.00000	.00000	.00000	.00000	.00000
20	85.0	43.0	15.980	746.	.00000	.00000	.00033	.00990	.77311	.20739	.00925	.00000	.00000	.00000	.00000	.00000
21	85.0	43.0	2.518	114.	.00000	.00000	.00033	.00990	.77311	.20739	.00925	.00000	.00000	.00000	.00000	.00000
22	737.2	510.0	2.518	11857.	.00000	.00000	.00033	.00990	.77311	.20739	.00925	.00000	.00000	.00000	.00000	.00000
23	2100.0	492.0	20.210	340605.	.00000	.00000	.06580	.22315	.61464	.09024	.00616	.00000	.00000	.00000	.00000	.00000
24	829.8	16.2	20.210	116443.	.00000	.00000	.06580	.22315	.61464	.09024	.00616	.00000	.00000	.00000	.00000	.00000
25	763.0	15.7	20.210	105593.	.00000	.00000	.06580	.22315	.61464	.09024	.00616	.00000	.00000	.00000	.00000	.00000
26	492.4	15.2	20.210	62731.	.00000	.00000	.06580	.22315	.61464	.09024	.00616	.00000	.00000	.00000	.00000	.00000
27	388.3	14.7	20.210	46666.	.00000	.00000	.06580	.22315	.61464	.09024	.00616	.00000	.00000	.00000	.00000	.00000
SLAG		1.959	lb/sec	705.	Btu/sec											

STREAM NUMBER	STREAM MOLAR FLOWS CH4	C2H6	CO2	H2Ov	N2	O2	Ar	CO	H2	H2S	NH3	H2Oliq
1	.000	.000	.005	.158	12.354	3.314	.148	.000	.000	.000	.000	.000
2	.000	.000	.005	.158	12.354	3.314	.148	.000	.000	.000	.000	.000
3	.000	.000	.004	.133	10.407	2.792	.125	.000	.000	.000	.000	.000
4	.000	.000	.004	.133	10.407	2.792	.125	.000	.000	.000	.000	.000
5	.000	.000	.004	2.991	10.407	2.792	.125	.000	.000	.000	.000	.000
6	.040	.000	.161	.172	2.015	.000	.000	1.125	.652	.026	.000	.000
7	.040	.000	.161	1.259	2.015	.000	.000	1.125	.652	.000	.000	.000
8	.000	.000	.000	.000	.000	.000	.000	.000	.000	.026	.000	.000
9	.000	.000	.000	.000	.000	.000	.000	.000	.000	.000	.000	.000
10	.000	.000	.000	.000	.000	.000	.000	.000	.000	.000	.000	6.224
11	.000	.000	.000	.000	.000	.000	.000	.000	.000	.000	.000	6.224
12	.000	.000	.000	.000	.000	.000	.000	.000	.000	.000	.000	2.049
13	.000	.000	.000	.000	.000	.000	.000	.000	.000	.000	.000	4.175
14	.000	.000	.000	.000	.000	.000	.000	.000	.000	.000	.000	3.088
15	.000	.000	.000	.000	.000	.000	.000	.000	.000	.000	.000	1.087
16	.000	.000	.000	3.088	.000	.000	.000	.000	.000	.000	.000	.000
17	.000	.000	.000	3.088	.000	.000	.000	.000	.000	.000	.000	.000
18	.000	.000	.000	.231	.000	.000	.000	.000	.000	.000	.000	.000
19	.000	.000	.000	2.857	.000	.000	.000	.000	.000	.000	.000	.000
20	.000	.000	.005	.158	12.354	3.314	.148	.000	.000	.000	.000	.000
21	.000	.000	.001	.025	1.947	.522	.023	.000	.000	.000	.000	.000
22	.000	.000	.001	.025	1.947	.522	.023	.000	.000	.000	.000	.000
23	.000	.000	1.330	4.510	12.422	1.824	.124	.000	.000	.000	.000	.000
24	.000	.000	1.330	4.510	12.422	1.824	.124	.000	.000	.000	.000	.000
25	.000	.000	1.330	4.510	12.422	1.824	.124	.000	.000	.000	.000	.000

Table 3.4.b

ISTIG Partial-Quench Units Output using Fluid-Bed Air Gasifier

```
COMPRESSOR # 1
     # OF STAGES =  10     PRESSURE RATIO =      3.125     COMPRESSOR EFFICIENCY =  .868
     WORK OF COMPRESSION =     26183. Btu/sec

COMPRESSOR # 2
     # OF STAGES =  10     PRESSURE RATIO =     11.628     COMPRESSOR EFFICIENCY =  .868
     WORK OF COMPRESSION =     62360. Btu/sec

COMPRESSOR # 3
     # OF STAGES =  10     PRESSURE RATIO =     11.860     COMPRESSOR EFFICIENCY =  .868
     WORK OF COMPRESSION =     11800. Btu/sec

TOTAL WORK OF COMPRESSION =      100344. Btu/sec,  105.9 MW

TURBINE RESULTS:
     # OF STAGES =  10     EXPANSION RATIO =     30.370     TURBINE EFFICIENCY =  .880
     TURBINE WORK =    224174. Btu/sec,  236.5 MW

HEAT EXCHANGER # 1          CALCULATED UA =    914.111
     APPROACH TEMPERATURE AT HOT INLET  =   26.3 F       APPROACH TEMPERATURE AT HOT OUTLET =   25.0 F
     HOT STREAM DELTA P =  2.0 PSIA      COLD STREAM DELTA P =  5.0 PSIA

COMBUSTOR OUTPUT
     AIRRATIO =  2.538          FINAL H2ORATIO =  .1890
     FUEL INLET TEMPERATURE =  1200.0 F     WET AIR INLET TEMPERATURE =   741.5 F     TURBINE INLET TEMPERATURE =  2100.0 F

STEAM GENERATOR OUTPUT
     HX 1     DELTA P WATER =  5.0   DELTA P GAS =   .5   MINIMUM APPROACH TEMP = 25.0 F
     HX 2     DELTA P WATER =  2.0   DELTA P GAS =   .5   MINIMUM APPROACH TEMP = 25.0 F
     HX 3     DELTA P WATER =  2.0   DELTA P GAS =   .5   MINIMUM APPROACH TEMP = 25.0 F
     STACK GAS TEMPERATURE =    388.3 F
     MAXIMUM STEAM TEMPERATURE =    804.8 F
     STEAM FLOW RATE =      3.09 lbmol/sec

GASIFIED COAL QUENCH OUTPUT
     GASIFIED COAL INLET TEMPERATURE =  1850.0 deg F     QUENCHED GAS EXIT TEMPERATURE =  1200.0 deg F
     AMOUNT OF H2S REMOVED =  .0262 lbmol/sec            AMOUNT OF NH3 REMOVED =  .0000 lbmol/sec
     WATER EVAPORATED IN THE GASIFIED COAL QUENCH =  1.087 lbmol/sec

SYSTEM OUTPUT

     NET WORK OUT =      123831. Btu/sec,  130.6 MW

     HEAT RATE =    8148. Btu / kWhr

     FRACTION OF TOTAL COMPRESSION WORK ACCOMPLISHED IN COMPRESSOR NO.1 =  .2609

     SYSTEM EFFICIENCY ( BASED ON ILLINOIS COAL NO.6, 12774 Btu/lb DRY HHV ) =    41.35 %
```

Figure 3.10

Variation of ISTIG System Efficiency* with System Pressure

Fluid–Bed O_2 gasifier (Partial–Quench) Case

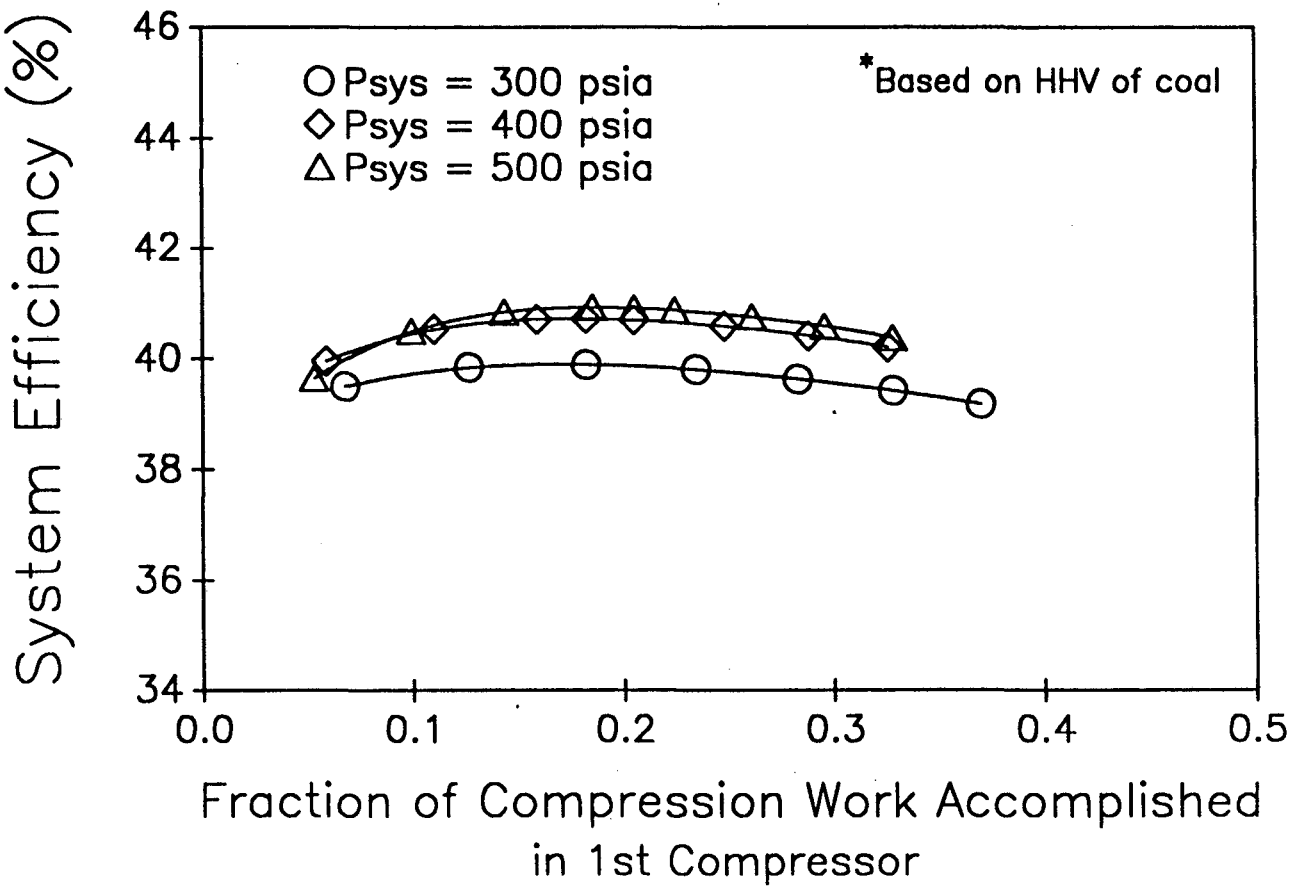

Figure 3.11

Variation of ISTIG System Efficiency* with Compressor Loading

Fluid–Bed Air Gasifier (Partial–Quench) Case

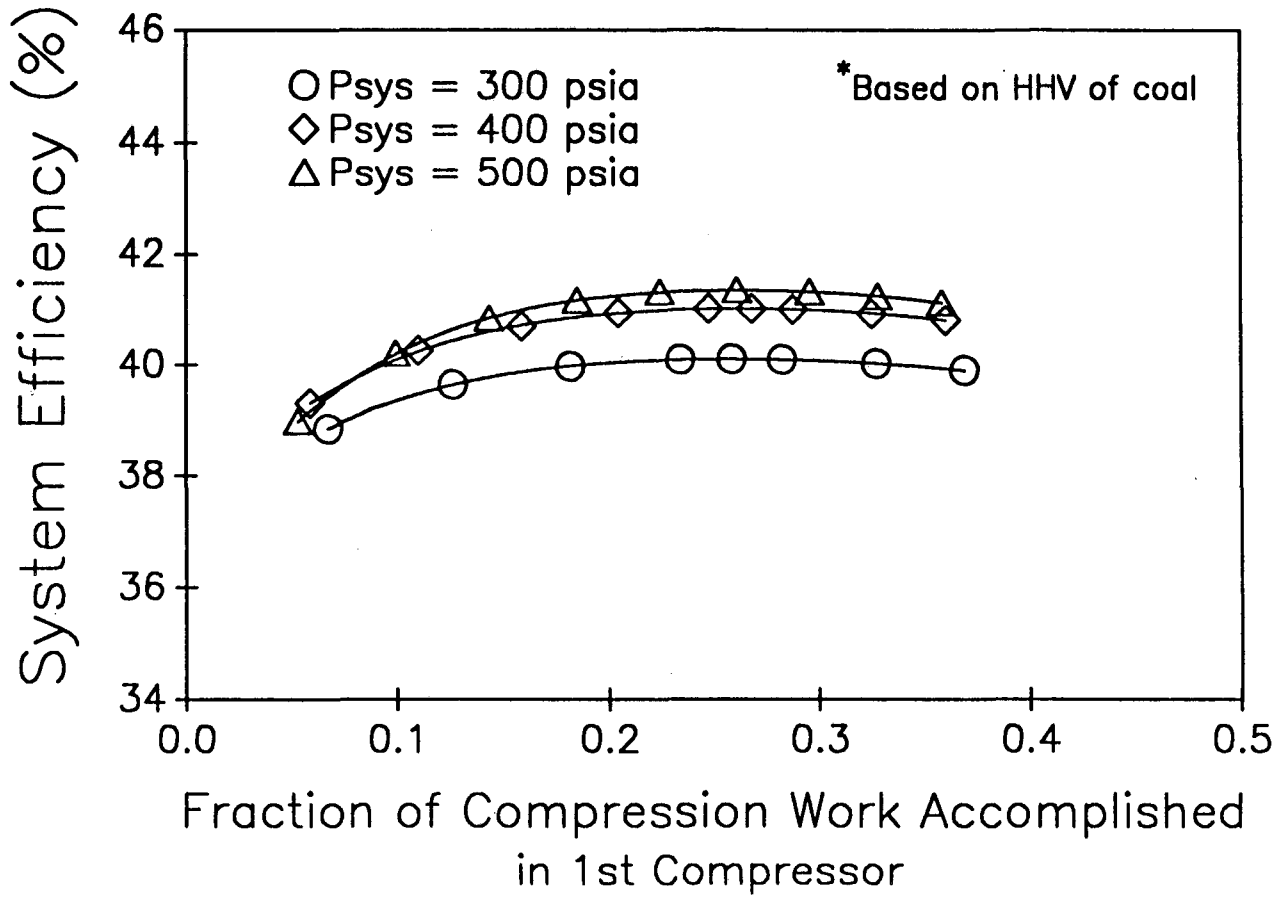

was done for the Texaco gasifier, by subtracting the work penalty for cryogenic separation of air from the turbine work. The fluid-bed air gasifier uses a flow of compressed air to supply O_2 necessary for gasification. Compressed air is supplied to the gasifier by sending more air through the first-stage compressor than is needed in the combustor and splitting air off to the gasifier after the compressor intercooler. This air flow is then sent to a third compressor, operating in parallel with the second-stage compressor for the primary air flow, where it is compressed to system pressure plus the gasifier pressure drop. The work of compression for this third compressor is added to the work of the two main compression stages, which is subtracted from the turbine work when determining system efficiency.

3.4.3 Effects of Compressor Loading and System Pressure

Sensitivity of the fluid-bed ISTIG systems to compressor loading is shown in Figures 3.10 and 3.11 at several system pressures. The behavior of these ISTIG systems is qualitatively very similar to that of the ISTIG design which uses the Texaco O_2 gasifier. Maximum thermal efficiency is obtained in the fluid-bed O_2 ISTIG system at a compression loading of around 20 percent of the total work of compression in the first-stage compressor and at about 25 percent in the fluid-bed air ISTIG system. System efficiency is relatively unaffected over a broad range of compression loadings around the optimum and then begins to fall off at compression loadings roughly 10 percentage points from the optimum.

3.4.4 Gasifier Comparisons

A comparison of the three different methods of coal gasification is made in Figure 3.12, where the system efficiencies of ISTIG designs employing the three gasifiers are shown for various system pressures and optimum compressor loading. This figure shows clearly the thermal efficiency advantage of using a fluid-bed gasifier as opposed to a Texaco entrained-flow gasifier. The dependence of system efficiency on system pressure is qualitatively the same for the fluid-bed

Figure 3.12

Variation of ISTIG Coal–Gas System Efficiency* with System Pressure

with Three Different Gasifiers (Partial Quench) at Optimal Compressor Loading

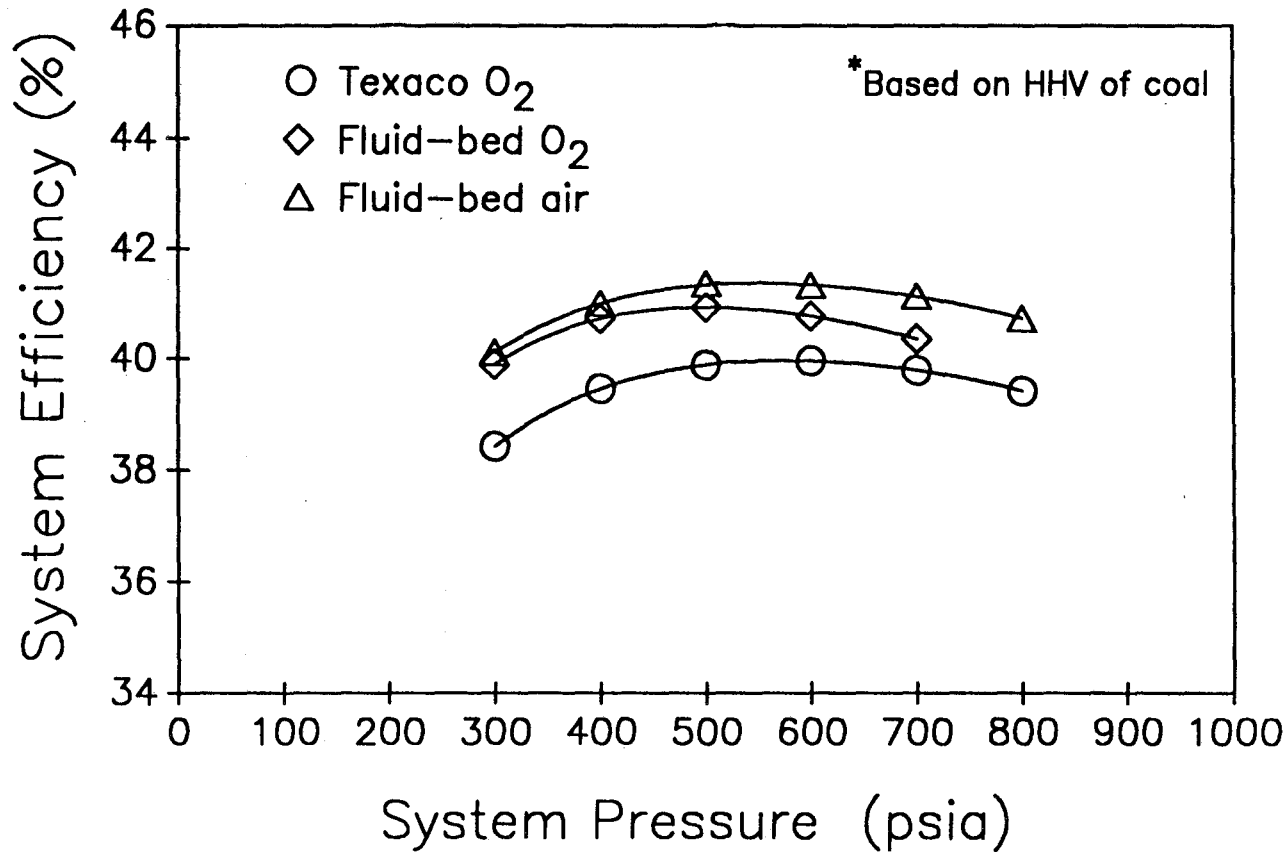

ISTIG systems as for the Texaco ISTIG system, with an optimum system pressure of approximately 500 psia for the fluid-bed O_2 gasifier and 550 psia for the fluid-bed air gasifier. These values differ little from the optimum of 600 psia for the Texaco gasifier. The maximum efficiencies obtained with the fluid-bed ISTIG systems are 40.9 percent for the O_2-fed case and 41.4 percent for the air-fed case. These values are a significant improvement over the 40.0 percent efficiency obtained with the Texaco gasifier.

3.4.5 Improved Thermal Efficiency with Fluid-Bed Gasifiers

The principal reason why the fluid-bed gasifiers perform better in the ISTIG coal-gas systems is because these gasifiers leave more of the energy content of the original coal in the chemical form. Less of the coal is burned to CO_2 in the gasification process. The Texaco entrained-flow gasifier uses significantly more of the chemical energy of the coal to heat the coal-gas and vaporize the water that is used to slurry the coal. It is desirable to minimize the complete combustion of the coal (*i.e.* forming the combustion products CO_2 and H_2O) and only combust the coal necessary to provide the heat for gasification. Since the coal gas leaving the gasifier must be cooled by evaporating water which ultimately leaves as water vapor, the sensible heat energy cannot be used as efficiently as the chemical energy of the coal gas, which is released in the combustion turbine. Typical exit temperatures for entrained-flow gasifiers are around 2400°F, compared with around 1850°F for fluid-bed gasifiers. As mentioned previously, entrained-flow gasifiers do have the possible advantage that they melt the mineral content of the coal to form slag whereas fluid-bed gasifiers do not. The coal mineral content leaves fluid-bed gasifiers as ash, which is environmentally less desirable than slag.

It is interesting to note that the fluid-bed air-gasifier case has a higher system efficiency than the fluid-bed O_2 gasifier. The difference is not large, only

0.4 percentage points, but significant. The reason for this difference is that the ISTIG system using the air-fed gasifier more nearly matches the water flow required for intercooling to the system's requirement for water, both in the quench and in the steam-generation of the heat-recovery section. More water is evaporated in the quench of the air-fed case since the coal-gas stream contains about 50 percent diluent nitrogen, which increases the mass flow of the coal gas and requires evaporating more water to saturate the coal-gas stream relative to the fluid-bed O_2 case. Less heated water is sent from the intercooler to a cooling tower and thus less heat is lost from the system. The superior efficiency resulting from using compressed air instead of O_2 is a fortunate development since the capital investment for a cryogenic air-separation plant can be a sizable fraction of total plant cost; the O_2 feed unit constitutes 15 percent of the capital cost of the Cool Water design (EPRI, 1984), which is already a capital intensive coal-gas plant design. An ISTIG plant would have a lower capital investment than a combined-cycle plant like the Cool Water design, and an O_2 feed unit would represent an even larger fraction of the total capital cost for the plant.

Chapter 4 ADVANCED DESIGN HEAT RECOVERY

The ISTIG heat-recovery system, which is used for the gas-turbine power plants discussed in Chapter 3, achieves maximum thermal efficiency when a high-temperature, partial-quench method of cleaning the coal gas is used. The technology necessary to accomplish high-temperature clean-up of coal gas is still in the developmental stage and poses many problems from an operations standpoint, as was discussed above. A medium-temperature, full-quench method of cleaning coal gas would have significant advantages from an operations standpoint because the clean-up could be effected in one or more simple aqueous scrubs. With the ISTIG configuration, the full-quench method results in a system efficiency lower by about 1.3 percentage points relative to the partial-quench method. Notwithstanding this thermal disadvantage, the full-quench method may still be attractive because of the simplicity of operation and potential reliability when compared to the partial-quench method.

While ISTIG heat recovery maximizes the thermal efficiency of a system using a partial-quench method, it is not the best configuration for the full-quench method. ISTIG configurations using full-quench clean-up evaporate more water into the coal gas than when using partial-quench clean-up while the steam generated is about the same, resulting in a lower thermal efficiency. Because of the potential advantages of using a full-quench method of coal-gas clean-up, an alternative heat-recovery design is needed which will improve the thermal efficiency of a coal-gas turbine system that uses the full-quench method.

Such a design is shown in Figure 4.1. This design, which will be referred to as the **advanced design**, represents a significant improvement over the ISTIG configuration for maximizing the thermal efficiency of a system using the full-quench method. Furthermore, the advanced design allows the full-quench method to have a potential thermal-efficiency advantage over the partial-quench method.

Figure 4.1
Advanced Design Gas–Turbine System

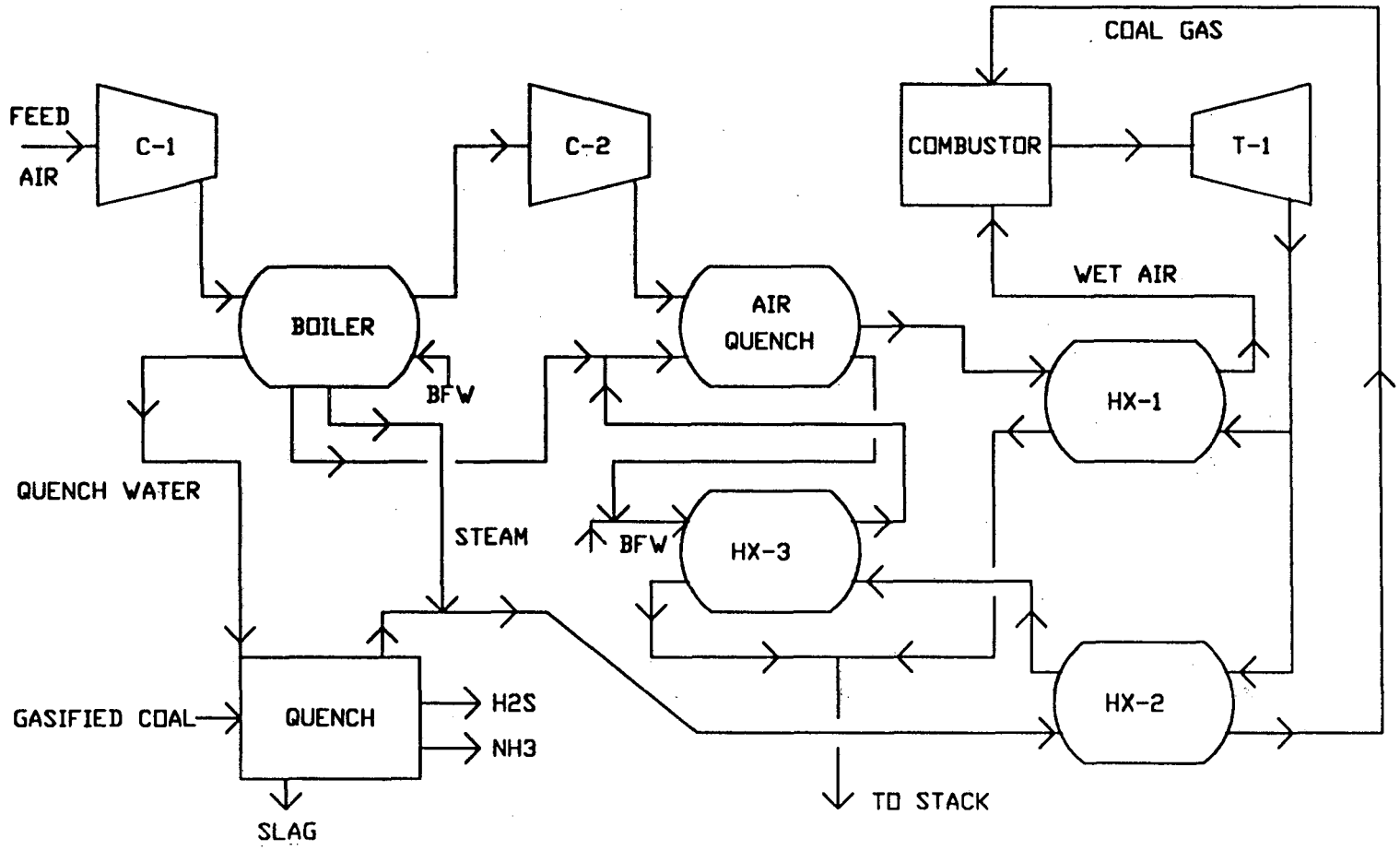

4.1 Details of the Advanced Design

The flowsheet for the general case of the advanced design is shown in Figure 4.1. As in the ISTIG configuration, the coal gas passes through an aqueous quench where it is cooled and cleaned. Unlike the ISTIG case, the coal gas is then heated with turbine exhaust prior to combustion. Air is fed through a two-stage, boiler-intercooled compression train, which compresses the air to system pressure, generating some steam and heating quench water. Warm compressed air is then quenched with heated water to cool the air and increase its mass flow. The wet air is then heated by turbine exhaust before going to combustion. Hot wet air and hot wet coal gas are burned in the combustor, with the exhaust gas entering the turbine at the maximum allowable inlet temperature and expanding to slightly above atmospheric pressure. The hot exhaust gas leaing the turbine preheats the wet air and wet coal-gas streams, heats a boiler feed water stream and then goes to the stack.

Turbine-exhaust waste heat is recovered in the advanced design using indirect heat exchange with the wet air and fuel streams. High-temperature system heat is "recycled" at high temperature without generating steam. Low-temperature heat (below the saturation temperature of steam at system pressure) is recovered by evaporating water in the two aqueous quenches. Most of the turbine exhaust is cooled by heating the wet air stream in a countercurrent heat exchanger (HX-1). The rest of the turbine exhaust heats the quenched coal gas (HX-2) and then preheats water (HX-3) for the air quench. Turbine-exhaust streams leaving the wet-air heater (HX-1) and the air-quench water heater (HX-3) are combined and go to the stack.

Several important operations in the advanced design significantly improve heat recovery. Compressed air is cooled using a direct-contact water quench

(labeled "Air Quench" in Fig. 4.1) which saturates the air stream using heated water. This operation provides a method to recover low-temperature waste heat. Compressor intercooling is accomplished using a steam boiler in the advanced design, instead of using single-phase heat exchange as is done in an ISTIG design. The boiler generates a small stream of saturated steam and supplies water at the same temperature as the steam, for use in both quenches. Part of the boiler steam is added to the quenched coal-gas stream and the rest is sent to supply the steam required by the gasifier in the fluid-bed cases.

Heat to drive the boiler comes from cooling the compressed air leaving the first-stage compressor before sending it to the second-stage compressor. Because the heat energy resulting from compression (which is about equal to the work of compression) can be recovered efficiently following both compression stages, it becomes advantageous to divide the load about equally between both compressors to minimize the total work of compression.

Finally, a heat exchanger (HX-3) recovers the lowest-temperature heat remaining in the exhaust gas before it leaves the system through the stack. The heat recovered in this exchanger is used to heat a water stream that is combined with excess water coming from the boiler and sent to the air quench. To recover as much heat as possible, the water flow in HX-3 is set to match the heat capacity of the exhaust gas. This results in more water being sent to the air quench than can be evaporated, with excess water being recycled back to HX-3.

4.2 Advanced Design Potential

The potential for improved thermal efficiency in the advanced design is derived in part from the ability of its heat-recovery system to utilize low-temperature heat, which is done by heating and then vaporizing water into both the coal-gas and compressed air streams. Low-temperature heat is recovered in the two quenches by evaporating more water into the compressed-air and coal-gas streams

than would be possible without preheating the water feeds of both quenches. This low-temperature heat is used to essentially produce steam at system pressure but below the saturation temperature of the steam. The ISTIG partial-quench design recovers only a small amount of low-temperature heat by preheating water used in its high-temperature coal-gas quench.

In the advanced design, energy is recovered from the compressor intercooler and from cooling the turbine exhaust to less than 300°F. The ISTIG partial-quench design can not efficiently use the heat removed in the compressor intercooler because only a small amount of preheated water is needed in the coal-gas quench. Medium-temperature, quenched coal gas (approximately 400°F) and wet compressed air (approximately 275°F) are heated in the advanced design by high-temperature (800-1000°F, depending on system pressure) turbine exhaust before the fuel and air enter the combustion chamber. In this way the high-temperature heat of the turbine exhaust is "recycled" to the turbine instead of being used to generate steam; this utilization of high-quality heat is thermodynamically more efficient. The partial-quench method could not be used in the advanced design because the partially quenched coal gas is hotter than the turbine exhaust.

The advanced design thus incorporates a method of recovering waste heat from the turbine exhaust and the compressor intercooler that is significantly different from any of the existing methods of heat recovery such as the ISTIG or combined cycle. The performance of the advanced design is investigated below using the same three coal gasifiers that were used in the ISTIG design cases.

4.3 Advanced Design Performance

The advanced design heat-recovery system was developed to improve the thermal efficiency of a gas-turbine system which uses a full-quench method of coal-gas clean-up. As with ISTIG heat-recovery systems, finding the optimum

performance of an advanced design system requires varying the important system parameters. The parameters that were varied were the system pressure, the compression loading between the two air-compression stages and the type of gasifier used. All advanced design systems that were investigated used a full-quench method of coal-gas clean up, which is inherent to the advanced design. Varying these parameters shows the sensitivity of advanced design systems to changes which might be necessary for reasons not considered in this study, such as the commercial availability of equipment or other restrictions. Investigating system performance throughout the reasonable range of these parameters also defines the maximum thermal efficiency obtainable, which is important when comparing this system to other coal-gas turbine designs.

4.3.1 Gasifier Design Modifications

To use the three different gasifiers that were compared in the ISTIG systems, it is necessary to make minor modifications to the advanced design configuration to accommodate the needs of each gasifier. In addition to coal, each gasifier requires a flow of oxidant and water or steam. The Texaco gasifier uses 95 percent O_2 and heated water (part of the coal slurry), the fluid-bed O_2 gasifier uses 95 percent O_2 and steam and the fluid-bed air gasifier uses compressed air and steam to gasify the coal. The modified flowsheets for each gasifier are shown in Figures 4.2, 4.3.a and 4.4. Tables 4.1.a,b, 4.2.a,b and 4.3.a,b are representative samples of the simulation outputs for these respective flowsheets at a system pressure of 200 psia, with the compressor loading optimized. A system pressure of 200 psia optimizes the thermal efficiency of the advanced design with each gasifier. Tables 4.4.a,b, 4.5.a,b, and 4.6.a,b show the simulation outputs for Figures 4.2, 4.3.a and 4.4 at a system pressure of 500 psia, which is useful for comparison purposes.

Figure 4.2
Advanced Design Coal–Gas Turbine System
with Texaco O_2 Gasifier

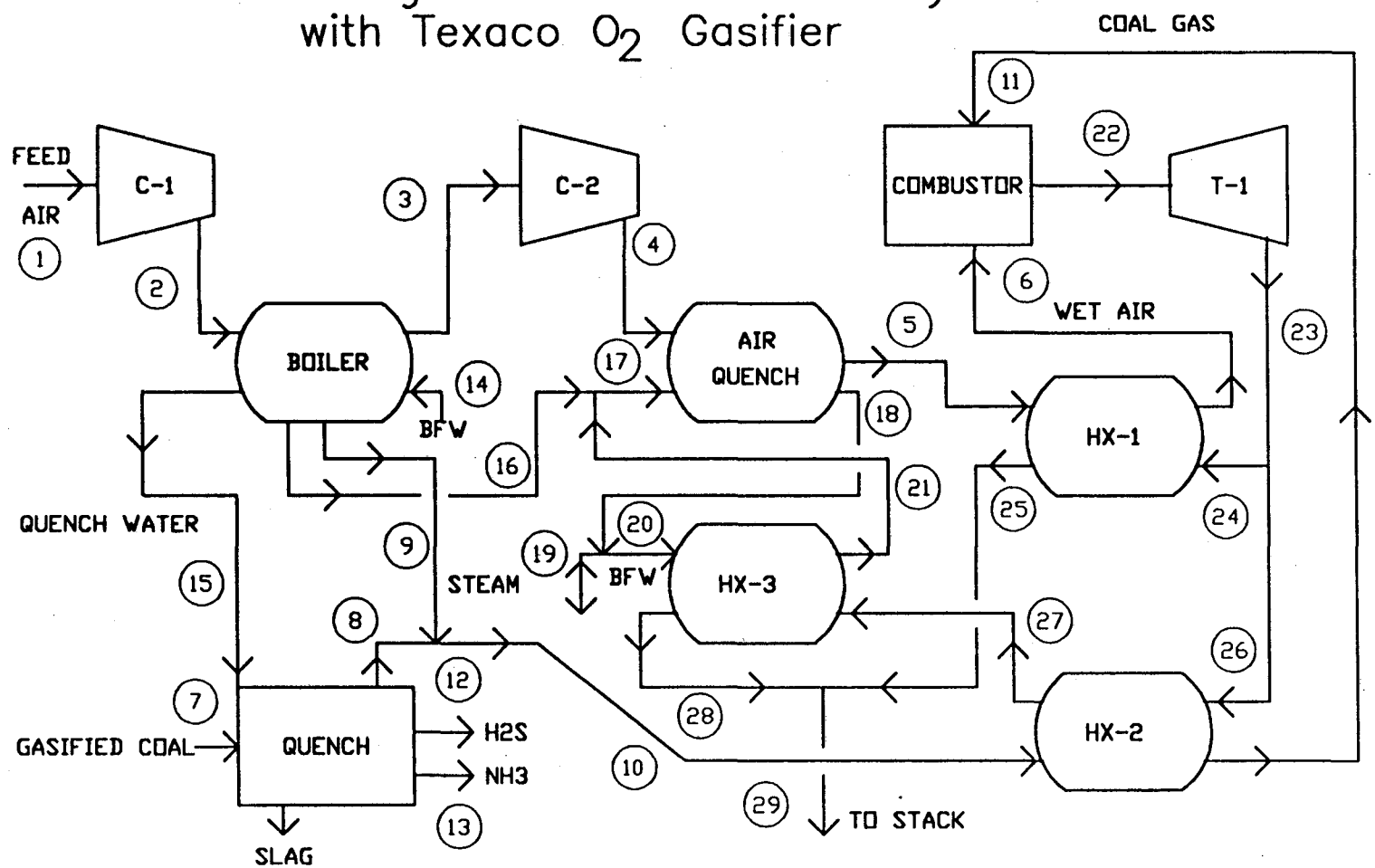

Table 4.1.a

Advanced Design Flowsheet using Texaco O_2 Gasifier

SIMULATION OUTPUT (BASED ON 1000 SHORT TONS / DAY OF COAL)

STREAM NUMBER	TEMP (degF)	PRESS (psia)	FLOW (lbmol/sec)	ENTHALPY (Btu/sec)	STREAM MOLE FRACTIONS CH4	C2H6	CO2	H2Ov	N2	O2	Ar	CO	H2	H2S	NH3	H2Oliq
1	60.0	14.4	16.723	-2036.	.00000	.00000	.00033	.00990	.77311	.20739	.00925	.00000	.00000	.00000	.00000	.00000
2	366.9	60.0	16.723	33924.	.00000	.00000	.00033	.00990	.77311	.20739	.00925	.00000	.00000	.00000	.00000	.00000
3	85.0	58.0	16.723	716.	.00000	.00000	.00033	.00990	.77311	.20739	.00925	.00000	.00000	.00000	.00000	.00000
4	353.3	200.0	16.723	32119.	.00000	.00000	.00033	.00990	.77311	.20739	.00925	.00000	.00000	.00000	.00000	.00000
5	223.4	200.0	18.358	18140.	.00000	.00000	.00030	.09806	.70427	.18892	.00843	.00000	.00000	.00000	.00000	.00000
6	1069.1	198.0	18.358	134671.	.00000	.00000	.00030	.09806	.70427	.18892	.00843	.00000	.00000	.00000	.00000	.00000
7	2400.0	200.0	2.625	51380.	.00080	.00000	.10790	.16490	.00680	.00000	.00910	.39620	.30260	.01000	.00170	.00000
8	336.2	200.0	5.597	9853.	.00038	.00000	.05061	.61381	.00319	.00000	.00427	.18582	.14192	.00000	.00000	.00000
9	.0	.0	.000	0.	.00000	.00000	.00000	.00000	.00000	.00000	.00000	.00000	.00000	.00000	.00000	.00000
10	336.2	200.0	5.597	9792.	.00038	.00000	.05061	.61381	.00319	.00000	.00427	.18582	.14192	.00000	.00000	.00000
11	1074.6	198.0	5.597	45876.	.00038	.00000	.05061	.61381	.00319	.00000	.00427	.18582	.14192	.00000	.00000	.00000
12	336.2	200.0	.026	48.	.00000	.00000	.00000	.00000	.00000	.00000	.00000	.00000	.00000	1.00000	.00000	.00000
13	336.2	200.0	.004	10.	.00000	.00000	.00000	.00000	.00000	.00000	.00000	.00000	.00000	.00000	1.00000	.00000
14	60.0	205.0	6.578	-126471.	.00000	.00000	.00000	.00000	.00000	.00000	.00000	.00000	.00000	.00000	.00000	1.00000
15	336.7	200.0	3.003	-42578.	.00000	.00000	.00000	.00000	.00000	.00000	.00000	.00000	.00000	.00000	.00000	1.00000
16	336.7	200.0	3.575	-50696.	.00000	.00000	.00000	.00000	.00000	.00000	.00000	.00000	.00000	.00000	.00000	1.00000
17	328.4	200.0	6.529	-93606.	.00000	.00000	.00000	.00000	.00000	.00000	.00000	.00000	.00000	.00000	.00000	1.00000
18	223.4	205.0	4.894	-79625.	.00000	.00000	.00000	.00000	.00000	.00000	.00000	.00000	.00000	.00000	.00000	1.00000
19	223.4	205.0	1.940	-31567.	.00000	.00000	.00000	.00000	.00000	.00000	.00000	.00000	.00000	.00000	.00000	1.00000
20	223.4	205.0	2.954	-48058.	.00000	.00000	.00000	.00000	.00000	.00000	.00000	.00000	.00000	.00000	.00000	1.00000
21	318.0	200.0	2.954	-42929.	.00000	.00000	.00000	.00000	.00000	.00000	.00000	.00000	.00000	.00000	.00000	1.00000
22	2100.0	190.0	23.048	390355.	.00000	.00000	.05774	.26224	.56174	.11050	.00775	.00000	.00000	.00000	.00000	.00000
23	1110.3	15.7	23.048	186743.	.00000	.00000	.05774	.26224	.56174	.11050	.00775	.00000	.00000	.00000	.00000	.00000
24	1110.3	15.7	17.026	137954.	.00000	.00000	.05774	.26224	.56174	.11050	.00775	.00000	.00000	.00000	.00000	.00000
25	248.4	15.2	17.026	21424.	.00000	.00000	.05774	.26224	.56174	.11050	.00775	.00000	.00000	.00000	.00000	.00000
26	1110.3	15.7	6.022	48790.	.00000	.00000	.05774	.26224	.56174	.11050	.00775	.00000	.00000	.00000	.00000	.00000
27	361.2	15.2	6.022	12707.	.00000	.00000	.05774	.26224	.56174	.11050	.00775	.00000	.00000	.00000	.00000	.00000
28	248.4	14.7	6.022	7579.	.00000	.00000	.05774	.26224	.56174	.11050	.00775	.00000	.00000	.00000	.00000	.00000
29	248.4	15.2	23.048	29001.	.00000	.00000	.05774	.26224	.56174	.11050	.00775	.00000	.00000	.00000	.00000	.00000

SLAG 1.959 lb/sec 1051. Btu/sec

Table 4.1.b

Advanced Design Units Output using Texaco O_2 Gasifier

```
COMPRESSOR # 1
     # OF STAGES =  10     PRESSURE RATIO =      4.167     COMPRESSOR EFFICIENCY =  .868
     WORK OF COMPRESSION =     36052. Btu/sec

COMPRESSOR # 2
     # OF STAGES =  10     PRESSURE RATIO =      3.448     COMPRESSOR EFFICIENCY =  .868
     WORK OF COMPRESSION =     31685. Btu/sec

TOTAL WORK OF COMPRESSION =       67737. Btu/sec,   71.5 MW

TURBINE RESULTS:
     # OF STAGES =  10     EXPANSION RATIO =     12.102     TURBINE EFFICIENCY =  .880
     TURBINE WORK =   203604. Btu/sec,  214.8 MW

HEAT EXCHANGER # 1          CALCULATED UA =   3594.401
     APPROACH TEMPERATURE AT HOT INLET  =   41.2 F       APPROACH TEMPERATURE AT HOT OUTLET =   25.0 F
     HOT STREAM DELTA P =   .5 PSIA      COLD STREAM DELTA P =  2.0 PSIA

HEAT EXCHANGER # 2          CALCULATED UA =   1201.162
     APPROACH TEMPERATURE AT HOT INLET  =   35.7 F       APPROACH TEMPERATURE AT HOT OUTLET =   25.0 F
     HOT STREAM DELTA P =   .5 PSIA      COLD STREAM DELTA P =  2.0 PSIA

HEAT EXCHANGER # 3          CALCULATED UA =    153.987
     APPROACH TEMPERATURE AT HOT INLET  =   43.3 F       APPROACH TEMPERATURE AT HOT OUTLET =   25.0 F
     HOT STREAM DELTA P =   .5 PSIA      COLD STREAM DELTA P =  5.0 PSIA

COMBUSTOR OUTPUT
     AIRRATIO =  2.958          FINAL H2ORATIO =  .1087
     FUEL INLET TEMPERATURE =  1074.6 F     WET AIR INLET TEMPERATURE =  1069.1 F     TURBINE INLET TEMPERATURE =  2100.0 F

BOILER OUTPUT
     APPROACH TEMPERATURE AT BFW INLET  =   25.0 F       APPROACH TEMPERATURE AT BFW OUTLET =   30.2 F
     BFW FLOW =   6.578 lbmol/sec     GASIFIED COAL QUENCH WATER FLOW =  3.003lbmol/sec     AIR QUENCH WATER FLOW =  3.575 lbmol/sec
     STEAM FLOW =  .000 lbmol/sec     STEAM TEMPERATURE =    .0 deg F

AIR QUENCH OUTPUT
     AIR INLET TEMPERATURE =   353.3 deg F      QUENCHED AIR OUTLET TEMPERATURE =   223.4 deg F
     WATER INLET TEMPERATURE =  328.4 deg F     WATER OUTLET TEMPERATURE =  223.4
     WATER EVAPORATED IN THE AIR QUENCH =  1.635 lbmol/sec

GASIFIED COAL QUENCH OUTPUT
     GASIFIED COAL INLET TEMPERATURE =  2400.0 deg F     QUENCHED GAS EXIT TEMPERATURE =   336.2 deg F
     AMOUNT OF H2S REMOVED =  .0263 lbmol/sec            AMOUNT OF NH3 REMOVED =  .0045 lbmol/sec
     WATER EVAPORATED IN THE GASIFIED COAL QUENCH =  3.003 lbmol/sec

SYSTEM OUTPUT

     NET WORK OUT ( NOT INCLUDING O2 PRODUCTION ) =      135867. Btu/sec,    143.3 MW

     ENERGY PENALTY FOR OXYGEN USED IN GASIFICATION =    10817. Btu/sec,   11.41 MW

     HEAT RATE =    8069. Btu / kWhr

     FRACTION OF TOTAL COMPRESSION WORK ACCOMPLISHED IN COMPRESSOR NO.1 =  .5322

     SYSTEM EFFICIENCY ( BASED ON ILLINOIS COAL NO.6, 12774 Btu/lb DRY HHV ) =    41.76 %
```

Figure 4.3.a
Advanced Design Coal–Gas Turbine System
with Fluid–Bed O_2 Gasifier

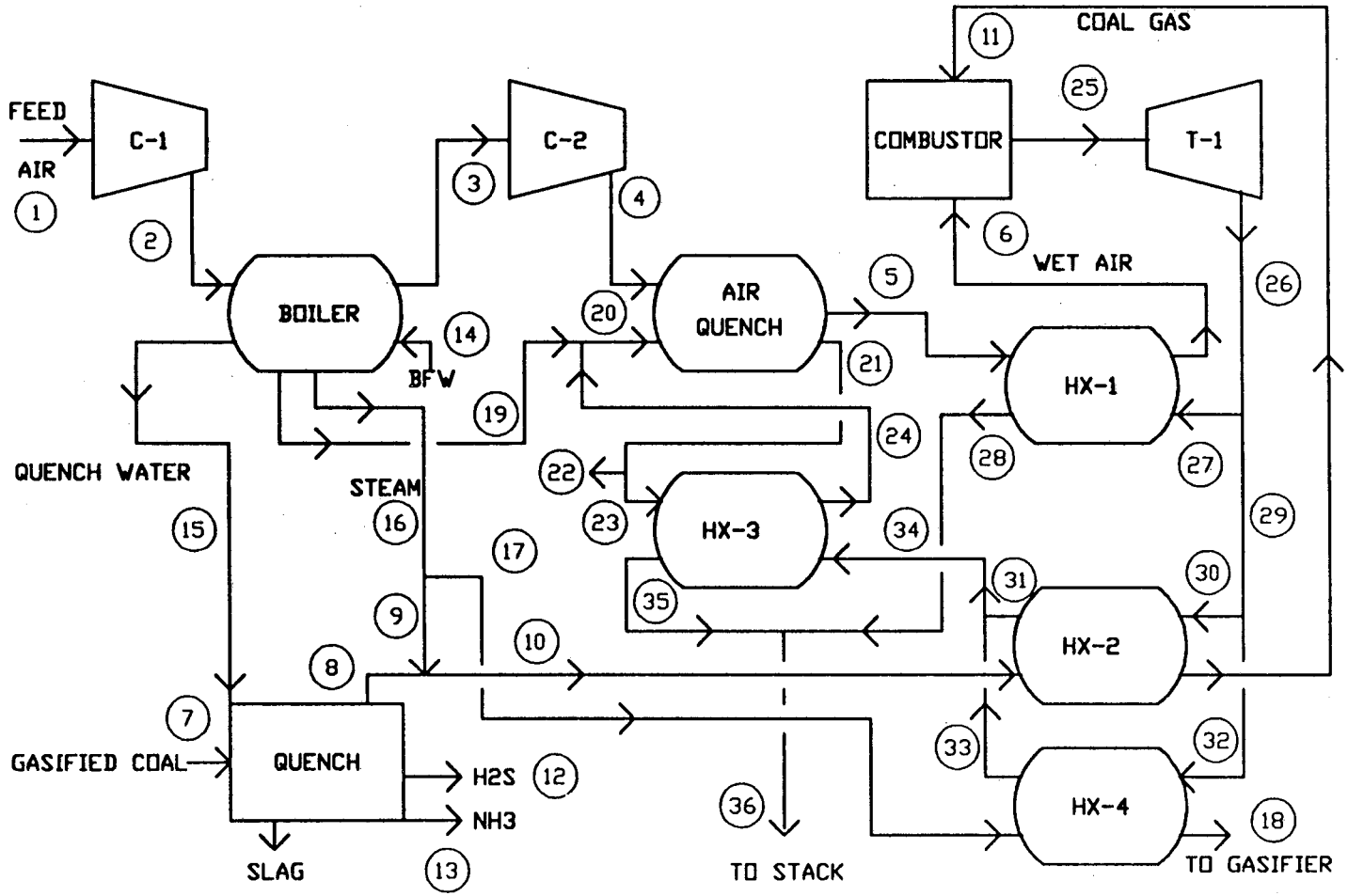

Table 4.2.a

Advanced Design Flowsheet using Fluid-Bed O_2 Gasifier

SIMULATION OUTPUT (BASED ON 1000 SHORT TONS / DAY OF COAL)

STREAM NUMBER	TEMP (degF)	PRESS (psia)	FLOW (lbmol/sec)	ENTHALPY (Btu/sec)	STREAM MOLE FRACTIONS CH4	C2H6	CO2	H2Ov	N2	O2	Ar	CO	H2	H2S	NH3	H2Oliq
1	60.0	14.6	20.919	-2548.	.00000	.00000	.00033	.00990	.77311	.20739	.00925	.00000	.00000	.00000	.00000	.00000
2	446.3	80.0	20.919	54256.	.00000	.00000	.00033	.00990	.77311	.20739	.00925	.00000	.00000	.00000	.00000	.00000
3	85.0	78.0	20.919	807.	.00000	.00000	.00033	.00990	.77311	.20739	.00925	.00000	.00000	.00000	.00000	.00000
4	279.1	200.0	20.919	29126.	.00000	.00000	.00033	.00990	.77311	.20739	.00925	.00000	.00000	.00000	.00000	.00000
5	218.5	200.0	22.740	21692.	.00000	.00000	.00030	.08920	.71119	.19078	.00851	.00000	.00000	.00000	.00000	.00000
6	1050.8	198.0	22.740	163283.	.00000	.00000	.00030	.08920	.71119	.19078	.00851	.00000	.00000	.00000	.00000	.00000
7	1850.0	200.0	2.044	29636.	.05777	.00000	.04682	.04383	.01693	.00000	.00000	.54376	.27592	.01278	.00219	.00000
8	320.7	200.0	3.815	6357.	.03095	.00000	.02508	.49575	.00907	.00000	.00000	.29132	.14783	.00000	.00000	.00000
9	381.7	200.0	.138	272.	.00000	.00000	.00000	1.00000	.00000	.00000	.00000	.00000	.00000	.00000	.00000	.00000
10	322.8	200.0	3.954	6629.	.02987	.00000	.02421	.51340	.00875	.00000	.00000	.28112	.14265	.00000	.00000	.00000
11	1058.9	198.0	3.954	31575.	.02987	.00000	.02421	.51340	.00875	.00000	.00000	.28112	.14265	.00000	.00000	.00000
12	320.7	200.0	.026	44.	.00000	.00000	.00000	.00000	.00000	.00000	.00000	.00000	.00000	1.00000	.00000	.00000
13	320.7	200.0	.004	9.	.00000	.00000	.00000	.00000	.00000	.00000	.00000	.00000	.00000	.00000	1.00000	.00000
14	60.0	205.0	8.293	-159448.	.00000	.00000	.00000	.00000	.00000	.00000	.00000	.00000	.00000	.00000	.00000	1.00000
15	381.7	200.0	1.802	-24002.	.00000	.00000	.00000	.00000	.00000	.00000	.00000	.00000	.00000	.00000	.00000	1.00000
16	381.7	200.0	.293	549.	.00000	.00000	.00000	1.00000	.00000	.00000	.00000	.00000	.00000	.00000	.00000	.00000
17	381.7	200.0	.155	304.	.00000	.00000	.00000	1.00000	.00000	.00000	.00000	.00000	.00000	.00000	.00000	.00000
18	1067.5	198.0	.155	1310.	.00000	.00000	.00000	1.00000	.00000	.00000	.00000	.00000	.00000	.00000	.00000	.00000
19	381.7	200.0	6.198	-82562.	.00000	.00000	.00000	.00000	.00000	.00000	.00000	.00000	.00000	.00000	.00000	1.00000
20	368.9	200.0	8.014	-108740.	.00000	.00000	.00000	.00000	.00000	.00000	.00000	.00000	.00000	.00000	.00000	1.00000
21	218.5	205.0	6.193	-101305.	.00000	.00000	.00000	.00000	.00000	.00000	.00000	.00000	.00000	.00000	.00000	1.00000
22	218.5	205.0	4.372	-71513.	.00000	.00000	.00000	.00000	.00000	.00000	.00000	.00000	.00000	.00000	.00000	1.00000
23	218.5	205.0	1.821	-29792.	.00000	.00000	.00000	.00000	.00000	.00000	.00000	.00000	.00000	.00000	.00000	1.00000
24	324.3	200.0	1.821	-26251.	.00000	.00000	.00000	.00000	.00000	.00000	.00000	.00000	.00000	.00000	.00000	1.00000
25	2100.0	190.0	25.853	429481.	.00000	.00000	.05152	.18783	.62688	.12626	.00748	.00000	.00000	.00000	.00000	.00000
26	1092.5	15.7	25.853	202327.	.00000	.00000	.05152	.18783	.62688	.12626	.00748	.00000	.00000	.00000	.00000	.00000
27	1092.5	15.7	21.397	167449.	.00000	.00000	.05152	.18783	.62688	.12626	.00748	.00000	.00000	.00000	.00000	.00000
28	243.5	15.2	21.397	25860.	.00000	.00000	.05152	.18783	.62688	.12626	.00748	.00000	.00000	.00000	.00000	.00000
29	1092.5	15.7	4.457	34880.	.00000	.00000	.05152	.18783	.62688	.12626	.00748	.00000	.00000	.00000	.00000	.00000
30	1092.5	15.7	4.270	33413.	.00000	.00000	.05152	.18783	.62688	.12626	.00748	.00000	.00000	.00000	.00000	.00000
31	347.8	15.2	4.270	8467.	.00000	.00000	.05152	.18783	.62688	.12626	.00748	.00000	.00000	.00000	.00000	.00000
32	1092.5	15.7	.187	1467.	.00000	.00000	.05152	.18783	.62688	.12626	.00748	.00000	.00000	.00000	.00000	.00000
33	411.2	15.2	.187	461.	.00000	.00000	.05152	.18783	.62688	.12626	.00748	.00000	.00000	.00000	.00000	.00000
34	350.5	15.2	4.457	8928.	.00000	.00000	.05152	.18783	.62688	.12626	.00748	.00000	.00000	.00000	.00000	.00000
35	243.5	14.7	4.457	5388.	.00000	.00000	.05152	.18783	.62688	.12626	.00748	.00000	.00000	.00000	.00000	.00000
36	243.5	15.2	25.853	31246.	.00000	.00000	.05152	.18783	.62688	.12626	.00748	.00000	.00000	.00000	.00000	.00000

SLAG 1.959 lb/sec 779. Btu/sec

Table 4.2.b

Advanced Design Units Output using Fluid-Bed O_2 Gasifier

```
COMPRESSOR # 1
     # OF STAGES =  10     PRESSURE RATIO =      5.556     COMPRESSOR EFFICIENCY =  .868
     WORK OF COMPRESSION =     56945. Btu/sec

COMPRESSOR # 2
     # OF STAGES =  10     PRESSURE RATIO =      2.564     COMPRESSOR EFFICIENCY =  .868
     WORK OF COMPRESSION =     28668. Btu/sec

TOTAL WORK OF COMPRESSION =       85613. Btu/sec,   90.3 MW

TURBINE RESULTS:
     # OF STAGES =  10     EXPANSION RATIO =     12.102     TURBINE EFFICIENCY =  .880
     TURBINE WORK =   227159. Btu/sec,  239.7 MW

HEAT EXCHANGER # 1          CALCULATED UA =   4338.097
     APPROACH TEMPERATURE AT HOT INLET  =   41.7 F       APPROACH TEMPERATURE AT HOT OUTLET =   25.0 F
     HOT STREAM DELTA P =   .5 PSIA      COLD STREAM DELTA P =  2.0 PSIA

HEAT EXCHANGER # 2          CALCULATED UA =    857.430
     APPROACH TEMPERATURE AT HOT INLET  =   33.6 F       APPROACH TEMPERATURE AT HOT OUTLET =   25.0 F
     HOT STREAM DELTA P =   .5 PSIA      COLD STREAM DELTA P =  2.0 PSIA

HEAT EXCHANGER # 3          CALCULATED UA =    138.396
     APPROACH TEMPERATURE AT HOT INLET  =   26.2 F       APPROACH TEMPERATURE AT HOT OUTLET =   25.0 F
     HOT STREAM DELTA P =   .5 PSIA      COLD STREAM DELTA P =  5.0 PSIA

HEAT EXCHANGER # 4          CALCULATED UA =     37.000
     APPROACH TEMPERATURE AT HOT INLET  =   25.0 F       APPROACH TEMPERATURE AT HOT OUTLET =   29.5 F
     HOT STREAM DELTA P =   .5 PSIA      COLD STREAM DELTA P =  2.0 PSIA

COMBUSTOR OUTPUT
     AIRRATIO =  5.239          FINAL H2ORATIO =  .0979
     FUEL INLET TEMPERATURE =  1058.9 F     WET AIR INLET TEMPERATURE =  1050.8 F     TURBINE INLET TEMPERATURE =  2100.0 F

BOILER OUTPUT
     APPROACH TEMPERATURE AT BFW INLET  =   25.0 F       APPROACH TEMPERATURE AT BFW OUTLET =   64.7 F
     BFW FLOW =   8.293 lbmol/sec     GASIFIED COAL QUENCH WATER FLOW =  1.802lbmol/sec     AIR QUENCH WATER FLOW =  6.198 lbmol/sec
     STEAM FLOW =  .293 lbmol/sec     STEAM TEMPERATURE = 381.7 deg F

AIR QUENCH OUTPUT
     AIR INLET TEMPERATURE =   279.1 deg F      QUENCHED AIR OUTLET TEMPERATURE =   218.5 deg F
     WATER INLET TEMPERATURE =  368.9 deg F     WATER OUTLET TEMPERATURE =  218.5
     WATER EVAPORATED IN THE AIR QUENCH =  1.821 lbmol/sec

GASIFIED COAL QUENCH OUTPUT
     GASIFIED COAL INLET TEMPERATURE =  1850.0 deg F     QUENCHED GAS EXIT TEMPERATURE =   320.7 deg F
     AMOUNT OF H2S REMOVED =  .0261 lbmol/sec            AMOUNT OF NH3 REMOVED =  .0045 lbmol/sec
     WATER EVAPORATED IN THE GASIFIED COAL QUENCH =  1.802 lbmol/sec

SYSTEM OUTPUT

     NET WORK OUT ( NOT INCLUDING O2 PRODUCTION ) =      141546. Btu/sec,    149.3 MW

     ENERGY PENALTY FOR OXYGEN USED IN GASIFICATION =     7429. Btu/sec,    7.84 MW

     HEAT RATE =    7523. Btu / kWhr

     FRACTION OF TOTAL COMPRESSION WORK ACCOMPLISHED IN COMPRESSOR NO.1 =  .6651

     SYSTEM EFFICIENCY ( BASED ON ILLINOIS COAL NO.6, 12774 Btu/lb DRY HHV ) =    44.79 %
```

Figure 4.3.b
Alternative Advanced Design Coal–Gas Turbine System
with Fluid–Bed O_2 Gasifier

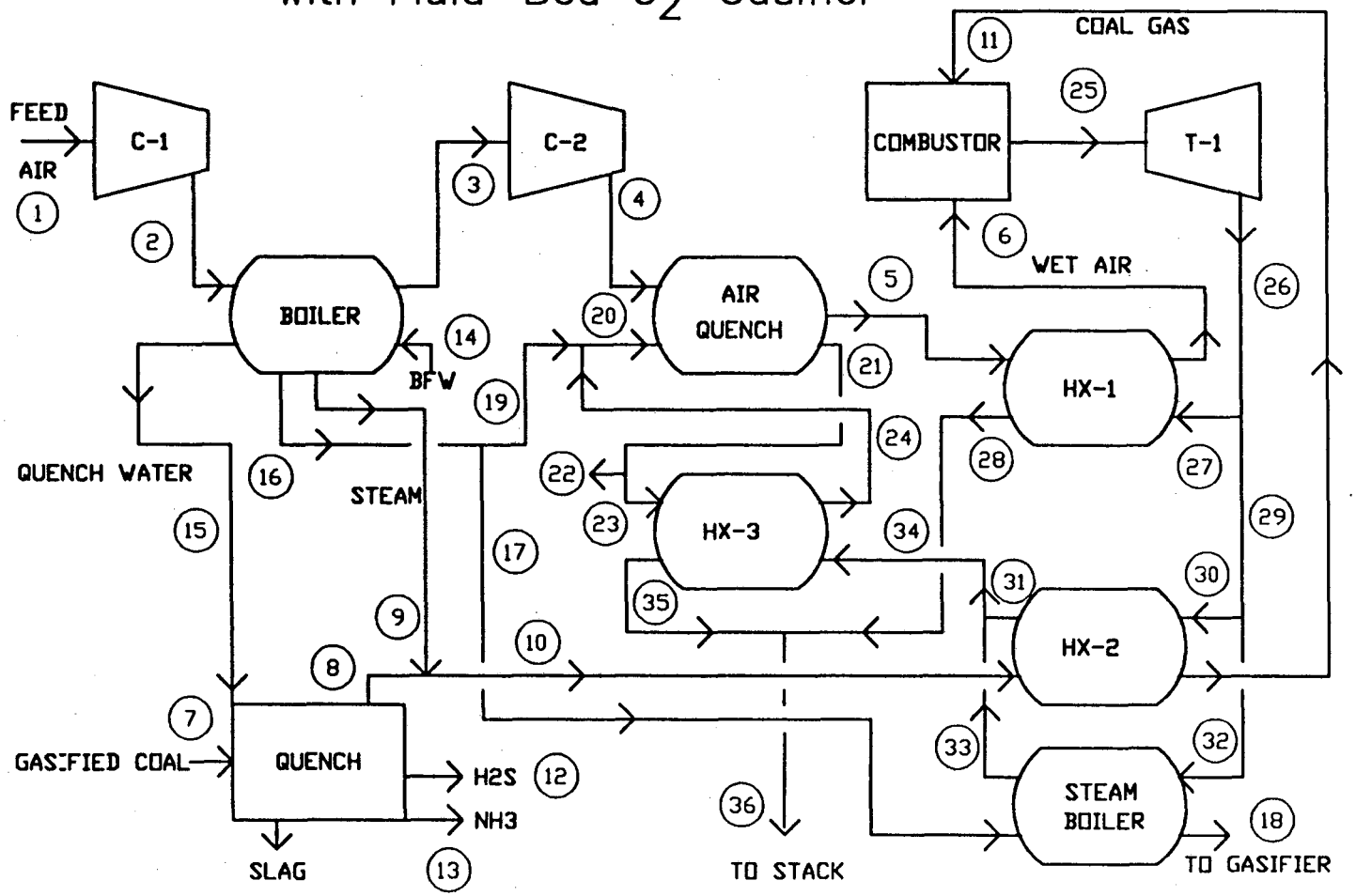

Figure 4.4
Advanced Design Coal–Gas Turbine System
with Fluid–Bed Air Gasifier

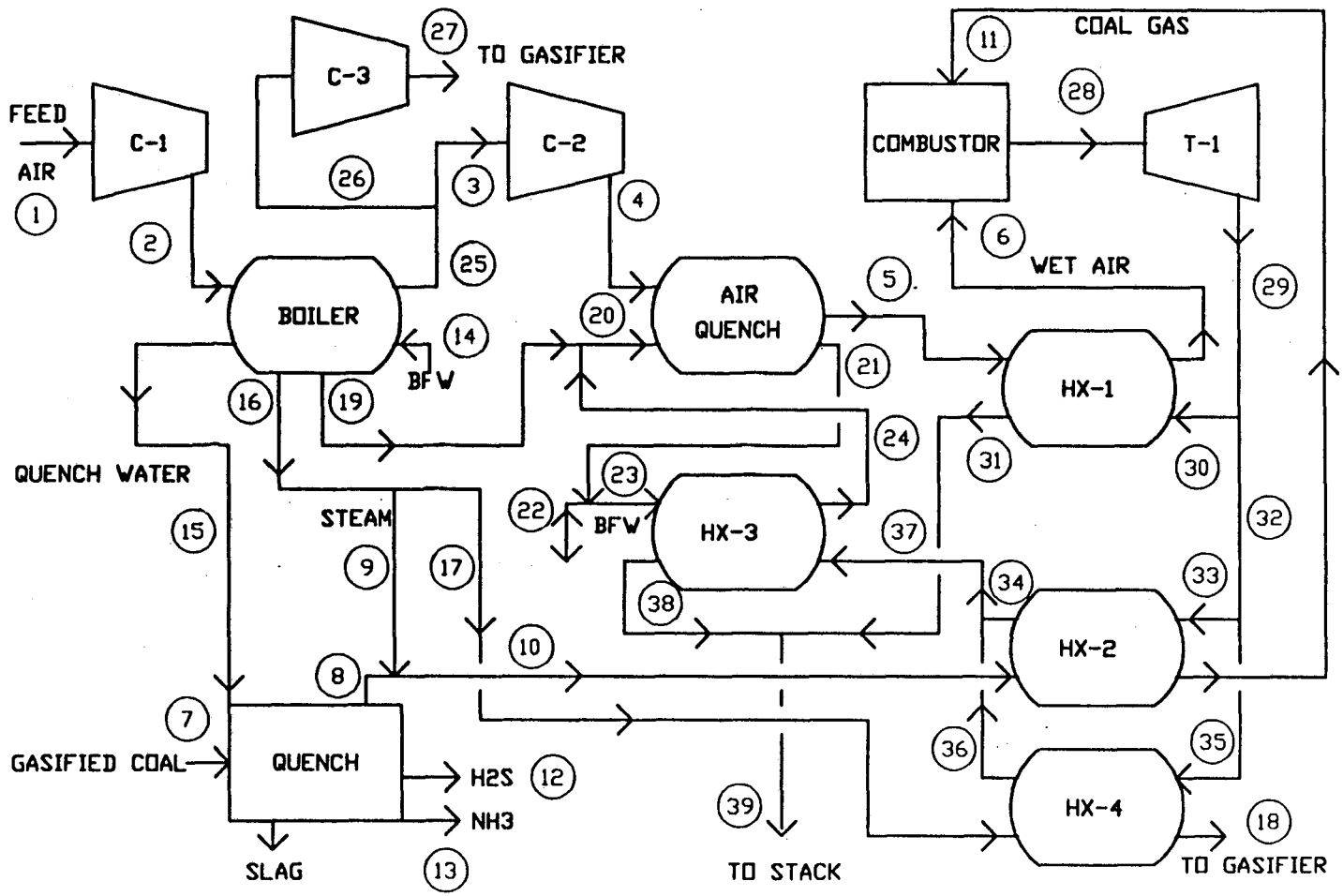

Table 4.3.a

Advanced Design Flowsheet using Fluid-Bed Air Gasifier

SIMULATION OUTPUT (BASED ON 1000 SHORT TONS / DAY OF COAL)

STREAM NUMBER	TEMP (degF)	PRESS (psia)	FLOW (lbmol/sec)	ENTHALPY (Btu/sec)	STREAM MOLE FRACTIONS CH4	C2H6	CO2	H2Ov	N2	O2	Ar	CO	H2	H2S	NH3	H2Oliq
1	60.0	14.4	18.288	-2227.	.00000	.00000	.00033	.00990	.77311	.20739	.00925	.00000	.00000	.00000	.00000	.00000
2	446.3	80.0	18.288	47433.	.00000	.00000	.00033	.00990	.77311	.20739	.00925	.00000	.00000	.00000	.00000	.00000
3	85.0	78.0	15.772	609.	.00000	.00000	.00033	.00990	.77311	.20739	.00925	.00000	.00000	.00000	.00000	.00000
4	279.1	200.0	15.772	21960.	.00000	.00000	.00033	.00990	.77311	.20739	.00925	.00000	.00000	.00000	.00000	.00000
5	218.6	200.0	17.147	16365.	.00000	.00000	.00030	.08931	.71110	.19076	.00851	.00000	.00000	.00000	.00000	.00000
6	1047.0	198.0	17.147	122621.	.00000	.00000	.00030	.08931	.71110	.19076	.00851	.00000	.00000	.00000	.00000	.00000
7	1850.0	200.0	4.190	57878.	.00954	.00000	.03835	.04111	.48080	.00000	.00000	.26842	.15552	.00626	.00000	.00000
8	318.3	200.0	7.629	12457.	.00524	.00000	.02106	.47676	.26408	.00000	.00000	.14743	.08542	.00000	.00000	.00000
9	381.7	200.0	.025	49.	.00000	.00000	.00000	1.00000	.00000	.00000	.00000	.00000	.00000	.00000	.00000	.00000
10	318.5	200.0	7.654	12507.	.00522	.00000	.02099	.47848	.26322	.00000	.00000	.14695	.08514	.00000	.00000	.00000
11	1057.6	198.0	7.654	59683.	.00522	.00000	.02099	.47848	.26322	.00000	.00000	.14695	.08514	.00000	.00000	.00000
12	318.3	200.0	.026	44.	.00000	.00000	.00000	.00000	.00000	.00000	.00000	.00000	.00000	1.00000	.00000	.00000
13	318.3	200.0	.000	0.	.00000	.00000	.00000	.00000	.00000	.00000	.00000	.00000	.00000	.00000	1.00000	.00000
14	60.0	205.0	7.250	-139396.	.00000	.00000	.00000	.00000	.00000	.00000	.00000	.00000	.00000	.00000	.00000	1.00000
15	381.7	200.0	3.469	-46155.	.00000	.00000	.00000	.00000	.00000	.00000	.00000	.00000	.00000	.00000	.00000	1.00000
16	381.7	200.0	.256	480.	.00000	.00000	.00000	1.00000	.00000	.00000	.00000	.00000	.00000	.00000	.00000	.00000
17	381.7	200.0	.231	454.	.00000	.00000	.00000	1.00000	.00000	.00000	.00000	.00000	.00000	.00000	.00000	.00000
18	1071.8	198.0	.231	1967.	.00000	.00000	.00000	1.00000	.00000	.00000	.00000	.00000	.00000	.00000	.00000	.00000
19	381.7	200.0	3.529	-47007.	.00000	.00000	.00000	.00000	.00000	.00000	.00000	.00000	.00000	.00000	.00000	1.00000
20	347.0	200.0	7.127	-99668.	.00000	.00000	.00000	.00000	.00000	.00000	.00000	.00000	.00000	.00000	.00000	1.00000
21	218.6	205.0	5.751	-94072.	.00000	.00000	.00000	.00000	.00000	.00000	.00000	.00000	.00000	.00000	.00000	1.00000
22	218.6	205.0	2.153	-35221.	.00000	.00000	.00000	.00000	.00000	.00000	.00000	.00000	.00000	.00000	.00000	1.00000
23	218.6	205.0	3.598	-58851.	.00000	.00000	.00000	.00000	.00000	.00000	.00000	.00000	.00000	.00000	.00000	1.00000
24	312.3	200.0	3.598	-52669.	.00000	.00000	.00000	.00000	.00000	.00000	.00000	.00000	.00000	.00000	.00000	1.00000
25	85.0	78.0	18.288	719.	.00000	.00000	.00033	.00990	.77311	.20739	.00925	.00000	.00000	.00000	.00000	.00000
26	85.0	78.0	2.519	97.	.00000	.00000	.00033	.00990	.77311	.20739	.00925	.00000	.00000	.00000	.00000	.00000
27	290.7	210.0	2.519	3713.	.00000	.00000	.00033	.00990	.77311	.20739	.00925	.00000	.00000	.00000	.00000	.00000
28	2100.0	190.0	23.697	399012.	.00000	.00000	.05615	.24102	.59950	.09716	.00615	.00000	.00000	.00000	.00000	.00000
29	1105.0	15.7	23.697	190000.	.00000	.00000	.05615	.24102	.59950	.09716	.00615	.00000	.00000	.00000	.00000	.00000
30	1105.0	15.7	15.627	125297.	.00000	.00000	.05615	.24102	.59950	.09716	.00615	.00000	.00000	.00000	.00000	.00000
31	243.6	15.2	15.627	19042.	.00000	.00000	.05615	.24102	.59950	.09716	.00615	.00000	.00000	.00000	.00000	.00000
32	1105.0	15.7	8.070	64704.	.00000	.00000	.05615	.24102	.59950	.09716	.00615	.00000	.00000	.00000	.00000	.00000
33	1105.0	15.7	7.798	62528.	.00000	.00000	.05615	.24102	.59950	.09716	.00615	.00000	.00000	.00000	.00000	.00000
34	343.5	15.2	7.798	15352.	.00000	.00000	.05615	.24102	.59950	.09716	.00615	.00000	.00000	.00000	.00000	.00000
35	1105.0	15.7	.271	2177.	.00000	.00000	.05615	.24102	.59950	.09716	.00615	.00000	.00000	.00000	.00000	.00000
36	406.7	15.2	.271	664.	.00000	.00000	.05615	.24102	.59950	.09716	.00615	.00000	.00000	.00000	.00000	.00000
37	345.6	15.2	8.070	16017.	.00000	.00000	.05615	.24102	.59950	.09716	.00615	.00000	.00000	.00000	.00000	.00000
38	243.6	14.7	8.070	9836.	.00000	.00000	.05615	.24102	.59950	.09716	.00615	.00000	.00000	.00000	.00000	.00000
39	243.6	15.2	23.697	28875.	.00000	.00000	.05615	.24102	.59950	.09716	.00615	.00000	.00000	.00000	.00000	.00000

SLAG 1.959 lb/sec 780. Btu/sec

Table 4.3.b

Advanced Design Units Output using Fluid-Bed Air Gasifier

```
COMPRESSOR # 1
     # OF STAGES = 10     PRESSURE RATIO =      5.556     COMPRESSOR EFFICIENCY = .868
     WORK OF COMPRESSION =     49784. Btu/sec

COMPRESSOR # 2
     # OF STAGES = 10     PRESSURE RATIO =      2.564     COMPRESSOR EFFICIENCY = .868
     WORK OF COMPRESSION =     21615. Btu/sec

COMPRESSOR # 3
     # OF STAGES = 10     PRESSURE RATIO =      2.692     COMPRESSOR EFFICIENCY = .868
     WORK OF COMPRESSION =      3660. Btu/sec

TOTAL WORK OF COMPRESSION =       75058. Btu/sec,   79.2 MW

TURBINE RESULTS:
     # OF STAGES = 10     EXPANSION RATIO =     12.102     TURBINE EFFICIENCY = .880
     TURBINE WORK =   209007. Btu/sec,  220.5 MW

HEAT EXCHANGER # 1          CALCULATED UA =   2711.029
     APPROACH TEMPERATURE AT HOT INLET  =   58.0 F       APPROACH TEMPERATURE AT HOT OUTLET =   25.0 F
     HOT STREAM DELTA P =   .5 PSIA      COLD STREAM DELTA P =  2.0 PSIA

HEAT EXCHANGER # 2          CALCULATED UA =   1347.644
     APPROACH TEMPERATURE AT HOT INLET  =   47.4 F       APPROACH TEMPERATURE AT HOT OUTLET =   25.0 F
     HOT STREAM DELTA P =   .5 PSIA      COLD STREAM DELTA P =  2.0 PSIA

HEAT EXCHANGER # 3          CALCULATED UA =    213.473
     APPROACH TEMPERATURE AT HOT INLET  =   33.3 F       APPROACH TEMPERATURE AT HOT OUTLET =   25.0 F
     HOT STREAM DELTA P =   .5 PSIA      COLD STREAM DELTA P =  5.0 PSIA

HEAT EXCHANGER # 6          CALCULATED UA =     52.298
     APPROACH TEMPERATURE AT HOT INLET  =   33.2 F       APPROACH TEMPERATURE AT HOT OUTLET =   25.0 F
     HOT STREAM DELTA P =   .5 PSIA      COLD STREAM DELTA P =  2.0 PSIA

COMBUSTOR OUTPUT
     AIRRATIO =  2.040          FINAL H2ORATIO =  .0981
     FUEL INLET TEMPERATURE =  1057.6 F     WET AIR INLET TEMPERATURE =  1047.0 F     TURBINE INLET TEMPERATURE =  2100.0 F

BOILER OUTPUT
     APPROACH TEMPERATURE AT BFW INLET  =   25.0 F       APPROACH TEMPERATURE AT BFW OUTLET =   64.7 F
     BFW FLOW =   7.250 lbmol/sec     GASIFIED COAL QUENCH WATER FLOW =  3.465lbmol/sec     AIR QUENCH WATER FLOW =  3.529 lbmol/sec
     STEAM FLOW =  .256 lbmol/sec     STEAM TEMPERATURE = 381.7 deg F

AIR QUENCH OUTPUT
     AIR INLET TEMPERATURE =   279.1 deg F      QUENCHED AIR OUTLET TEMPERATURE =   218.6 deg F
     WATER INLET TEMPERATURE =  347.0 deg F     WATER OUTLET TEMPERATURE =  218.6
     WATER EVAPORATED IN THE AIR QUENCH =  1.375 lbmol/sec

GASIFIED COAL QUENCH OUTPUT
     GASIFIED COAL INLET TEMPERATURE =  1850.0 deg F     QUENCHED GAS EXIT TEMPERATURE =   318.3 deg F
     AMOUNT OF H2S REMOVED =  .0262 lbmol/sec            AMOUNT OF NH3 REMOVED =  .0000 lbmol/sec
     WATER EVAPORATED IN THE GASIFIED COAL QUENCH =  3.465 lbmol/sec

SYSTEM OUTPUT

     NET WORK OUT =      133949. Btu/sec,    141.3 MW

     HEAT RATE =    7532. Btu / kWhr

     FRACTION OF TOTAL COMPRESSION WORK ACCOMPLISHED IN COMPRESSOR NO.1 =  .6633

     SYSTEM EFFICIENCY ( BASED ON ILLINOIS COAL NO.6, 12774 Btu/lb DRY HHV ) =    44.73 %
```

Table 4.4.a

Advanced Design Flowsheet (P = 500 psia) using Texaco O_2 Gasifier

SIMULATION OUTPUT (BASED ON 1000 SHORT TONS / DAY OF COAL)

STREAM NUMBER	TEMP (degF)	PRESS (psia)	FLOW (lbmol/sec)	ENTHALPY (Btu/sec)	STREAM MOLE FRACTIONS CH4	C2H6	CO2	H2Ov	N2	O2	Ar	CO	H2	H2S	NH3	H2Oliq
1	60.0	14.4	11.262	-1372.	.00000	.00000	.00033	.00990	.77311	.20739	.00925	.00000	.00000	.00000	.00000	.00000
2	542.1	110.0	11.262	36960.	.00000	.00000	.00033	.00990	.77311	.20739	.00925	.00000	.00000	.00000	.00000	.00000
3	85.0	108.0	11.262	352.	.00000	.00000	.00033	.00990	.77311	.20739	.00925	.00000	.00000	.00000	.00000	.00000
4	430.1	500.0	11.262	27632.	.00000	.00000	.00033	.00990	.77311	.20739	.00925	.00000	.00000	.00000	.00000	.00000
5	282.0	500.0	12.615	17023.	.00000	.00000	.00029	.11613	.69016	.18514	.00826	.00000	.00000	.00000	.00000	.00000
6	797.1	498.0	12.615	66057.	.00000	.00000	.00029	.11613	.69016	.18514	.00826	.00000	.00000	.00000	.00000	.00000
7	2400.0	500.0	2.625	51380.	.00080	.00000	.10790	.16490	.00680	.00000	.00910	.39620	.30260	.01000	.00170	.00000
8	408.9	500.0	6.023	12439.	.00035	.00000	.04703	.64111	.00296	.00000	.00397	.17269	.13189	.00000	.00000	.00000
9	466.6	500.0	.170	385.	.00000	.00000	.00000	1.00000	.00000	.00000	.00000	.00000	.00000	.00000	.00000	.00000
10	410.5	500.0	6.193	12824.	.00034	.00000	.04574	.65097	.00288	.00000	.00386	.16794	.12827	.00000	.00000	.00000
11	808.4	498.0	6.193	35671.	.00034	.00000	.04574	.65097	.00288	.00000	.00386	.16794	.12827	.00000	.00000	.00000
12	408.9	500.0	.026	60.	.00000	.00000	.00000	.00000	.00000	.00000	.00000	.00000	.00000	1.00000	.00000	.00000
13	408.9	500.0	.004	12.	.00000	.00000	.00000	.00000	.00000	.00000	.00000	.00000	.00000	.00000	1.00000	.00000
14	60.0	505.0	4.512	-86752.	.00000	.00000	.00000	.00000	.00000	.00000	.00000	.00000	.00000	.00000	.00000	1.00000
15	466.6	500.0	3.428	-39877.	.00000	.00000	.00000	.00000	.00000	.00000	.00000	.00000	.00000	.00000	.00000	1.00000
16	466.6	500.0	.913	-10625.	.00000	.00000	.00000	.00000	.00000	.00000	.00000	.00000	.00000	.00000	.00000	1.00000
17	420.0	500.0	3.789	-47636.	.00000	.00000	.00000	.00000	.00000	.00000	.00000	.00000	.00000	.00000	.00000	1.00000
18	282.0	505.0	2.436	-37026.	.00000	.00000	.00000	.00000	.00000	.00000	.00000	.00000	.00000	.00000	.00000	1.00000
19	60.0	505.0	.441	-8484.	.00000	.00000	.00000	.00000	.00000	.00000	.00000	.00000	.00000	.00000	.00000	1.00000
20	248.3	505.0	2.877	-45511.	.00000	.00000	.00000	.00000	.00000	.00000	.00000	.00000	.00000	.00000	.00000	1.00000
21	404.8	500.0	2.878	-37036.	.00000	.00000	.00000	.00000	.00000	.00000	.00000	.00000	.00000	.00000	.00000	1.00000
22	2100.0	490.0	17.891	311387.	.00000	.00000	.07429	.35184	.48765	.07904	.00716	.00000	.00000	.00000	.00000	.00000
23	855.3	15.7	17.891	109531.	.00000	.00000	.07429	.35184	.48765	.07904	.00716	.00000	.00000	.00000	.00000	.00000
24	855.3	15.7	11.159	68321.	.00000	.00000	.07429	.35184	.48765	.07904	.00716	.00000	.00000	.00000	.00000	.00000
25	307.0	15.2	11.159	19289.	.00000	.00000	.07429	.35184	.48765	.07904	.00716	.00000	.00000	.00000	.00000	.00000
26	855.3	15.7	6.731	41212.	.00000	.00000	.07429	.35184	.48765	.07904	.00716	.00000	.00000	.00000	.00000	.00000
27	435.5	15.2	6.731	18365.	.00000	.00000	.07429	.35184	.48765	.07904	.00716	.00000	.00000	.00000	.00000	.00000
28	273.5	14.7	6.731	9901.	.00000	.00000	.07429	.35184	.48765	.07904	.00716	.00000	.00000	.00000	.00000	.00000
29	294.4	15.2	17.891	29189.	.00000	.00000	.07429	.35184	.48765	.07904	.00716	.00000	.00000	.00000	.00000	.00000

SLAG 1.959 lb/sec 1014. Btu/sec

Table 4.4.b

Advanced Design Units Output (P = 500 psia) using Texaco O_2 Gasifier

```
COMPRESSOR # 1
    # OF STAGES =  10     PRESSURE RATIO =      7.639     COMPRESSOR EFFICIENCY =  .868
    WORK OF COMPRESSION =     38422. Btu/sec

COMPRESSOR # 2
    # OF STAGES =  10     PRESSURE RATIO =      4.630     COMPRESSOR EFFICIENCY =  .868
    WORK OF COMPRESSION =     27726. Btu/sec

TOTAL WORK OF COMPRESSION =       66149. Btu/sec,   69.8 MW

TURBINE RESULTS:
    # OF STAGES =  10     EXPANSION RATIO =     31.210     TURBINE EFFICIENCY =  .880
    TURBINE WORK =   201862. Btu/sec,  213.0 MW

HEAT EXCHANGER # 1          CALCULATED UA =   1246.860
    APPROACH TEMPERATURE AT HOT INLET  =   58.3 F       APPROACH TEMPERATURE AT HOT OUTLET =   25.0 F
    HOT STREAM DELTA P =   .5 PSIA      COLD STREAM DELTA P =  2.0 PSIA

HEAT EXCHANGER # 2          CALCULATED UA =    655.981
    APPROACH TEMPERATURE AT HOT INLET  =   46.9 F       APPROACH TEMPERATURE AT HOT OUTLET =   25.0 F
    HOT STREAM DELTA P =   .5 PSIA      COLD STREAM DELTA P =  2.0 PSIA

HEAT EXCHANGER # 3          CALCULATED UA =    304.810
    APPROACH TEMPERATURE AT HOT INLET  =   30.7 F       APPROACH TEMPERATURE AT HOT OUTLET =   25.3 F
    HOT STREAM DELTA P =   .5 PSIA      COLD STREAM DELTA P =  5.0 PSIA

COMBUSTOR OUTPUT
    AIRRATIO =  1.801          FINAL H2ORATIO =  .1314
    FUEL INLET TEMPERATURE =   808.4 F     WET AIR INLET TEMPERATURE =   797.1 F     TURBINE INLET TEMPERATURE =  2100.0 F

BOILER OUTPUT
    APPROACH TEMPERATURE AT BFW INLET  =   25.0 F       APPROACH TEMPERATURE AT BFW OUTLET =   75.5 F
    BFW FLOW =   4.512 lbmol/sec     GASIFIED COAL QUENCH WATER FLOW =  3.428lbmol/sec     AIR QUENCH WATER FLOW =   .913 lbmol/sec
    STEAM FLOW =  .170 lbmol/sec     STEAM TEMPERATURE = 466.6 deg F

AIR QUENCH OUTPUT
    AIR INLET TEMPERATURE =   430.1 deg F      QUENCHED AIR OUTLET TEMPERATURE =   282.0 deg F
    WATER INLET TEMPERATURE =  420.0 deg F     WATER OUTLET TEMPERATURE =  282.0
    WATER EVAPORATED IN THE AIR QUENCH =  1.353 lbmol/sec

GASIFIED COAL QUENCH OUTPUT
    GASIFIED COAL INLET TEMPERATURE =  2400.0 deg F     QUENCHED GAS EXIT TEMPERATURE =   408.9 deg F
    AMOUNT OF H2S REMOVED =  .0263 lbmol/sec            AMOUNT OF NH3 REMOVED =  .0045 lbmol/sec
    WATER EVAPORATED IN THE GASIFIED COAL QUENCH =  3.428 lbmol/sec

SYSTEM OUTPUT

    NET WORK OUT ( NOT INCLUDING O2 PRODUCTION ) =      135713. Btu/sec,    143.2 MW

    ENERGY PENALTY FOR OXYGEN USED IN GASIFICATION =    11449. Btu/sec,   12.08 MW

    HEAT RATE =    8120. Btu / kWhr

    FRACTION OF TOTAL COMPRESSION WORK ACCOMPLISHED IN COMPRESSOR NO.1 =  .5808

    SYSTEM EFFICIENCY ( BASED ON ILLINOIS COAL NO.6, 12774 Btu/lb DRY HHV ) =    41.49 %
```

Table 4.5.a

Advanced Design Flowsheet (P = 500 psia) using Fluid-Bed O_2 Gasifier

SIMULATION OUTPUT (BASED ON 1000 SHORT TONS / DAY OF COAL)

STREAM NUMBER	TEMP (degF)	PRESS (psia)	FLOW (lbmol/sec)	ENTHALPY (Btu/sec)	STREAM MOLE FRACTIONS CH4	C2H6	CO2	H2Ov	N2	O2	Ar	CO	H2	H2S	NH3	H2Oliq
1	60.0	14.4	15.082	-1838.	.00000	.00000	.00033	.00990	.77311	.20739	.00925	.00000	.00000	.00000	.00000	.00000
2	542.1	110.0	15.082	49497.	.00000	.00000	.00033	.00990	.77311	.20739	.00925	.00000	.00000	.00000	.00000	.00000
3	85.0	108.0	15.082	471.	.00000	.00000	.00033	.00990	.77311	.20739	.00925	.00000	.00000	.00000	.00000	.00000
4	430.1	500.0	15.082	37006.	.00000	.00000	.00033	.00990	.77311	.20739	.00925	.00000	.00000	.00000	.00000	.00000
5	287.6	500.0	17.101	23706.	.00000	.00000	.00029	.12680	.68183	.18290	.00816	.00000	.00000	.00000	.00000	.00000
6	778.1	498.0	17.101	87179.	.00000	.00000	.00029	.12680	.68183	.18290	.00816	.00000	.00000	.00000	.00000	.00000
7	1850.0	500.0	2.044	29636.	.05777	.00000	.04682	.04383	.01693	.00000	.00000	.54376	.27592	.01278	.00219	.00000
8	389.0	500.0	3.940	7901.	.02997	.00000	.02429	.51170	.00878	.00000	.00000	.28210	.14315	.00000	.00000	.00000
9	466.6	500.0	.073	165.	.00000	.00000	.00000	1.00000	.00000	.00000	.00000	.00000	.00000	.00000	.00000	.00000
10	390.4	500.0	4.013	8067.	.02943	.00000	.02385	.52060	.00862	.00000	.00000	.27696	.14054	.00000	.00000	.00000
11	785.8	498.0	4.013	22198.	.02943	.00000	.02385	.52060	.00862	.00000	.00000	.27696	.14054	.00000	.00000	.00000
12	389.0	500.0	.026	55.	.00000	.00000	.00000	.00000	.00000	.00000	.00000	.00000	.00000	1.00000	.00000	.00000
13	389.0	500.0	.004	11.	.00000	.00000	.00000	.00000	.00000	.00000	.00000	.00000	.00000	.00000	1.00000	.00000
14	60.0	505.0	6.042	-116181.	.00000	.00000	.00000	.00000	.00000	.00000	.00000	.00000	.00000	.00000	.00000	1.00000
15	466.6	500.0	1.926	-22408.	.00000	.00000	.00000	.00000	.00000	.00000	.00000	.00000	.00000	.00000	.00000	1.00000
16	466.6	500.0	.228	451.	.00000	.00000	.00000	1.00000	.00000	.00000	.00000	.00000	.00000	.00000	.00000	.00000
17	466.6	500.0	.155	350.	.00000	.00000	.00000	1.00000	.00000	.00000	.00000	.00000	.00000	.00000	.00000	.00000
18	803.7	498.0	.155	893.	.00000	.00000	.00000	1.00000	.00000	.00000	.00000	.00000	.00000	.00000	.00000	.00000
19	466.6	500.0	3.888	-45225.	.00000	.00000	.00000	.00000	.00000	.00000	.00000	.00000	.00000	.00000	.00000	1.00000
20	439.1	500.0	5.907	-72006.	.00000	.00000	.00000	.00000	.00000	.00000	.00000	.00000	.00000	.00000	.00000	1.00000
21	287.6	505.0	3.888	-58705.	.00000	.00000	.00000	.00000	.00000	.00000	.00000	.00000	.00000	.00000	.00000	1.00000
22	287.6	505.0	1.869	-28222.	.00000	.00000	.00000	.00000	.00000	.00000	.00000	.00000	.00000	.00000	.00000	1.00000
23	287.6	505.0	2.019	-30483.	.00000	.00000	.00000	.00000	.00000	.00000	.00000	.00000	.00000	.00000	.00000	1.00000
24	384.7	500.0	2.019	-26777.	.00000	.00000	.00000	.00000	.00000	.00000	.00000	.00000	.00000	.00000	.00000	1.00000
25	2100.0	490.0	20.276	343834.	.00000	.00000	.06560	.24944	.57676	.10130	.00688	.00000	.00000	.00000	.00000	.00000
26	828.7	15.7	20.276	117194.	.00000	.00000	.06560	.24944	.57676	.10130	.00688	.00000	.00000	.00000	.00000	.00000
27	828.7	15.7	15.723	90880.	.00000	.00000	.06560	.24944	.57676	.10130	.00688	.00000	.00000	.00000	.00000	.00000
28	312.6	15.2	15.723	27408.	.00000	.00000	.06560	.24944	.57676	.10130	.00688	.00000	.00000	.00000	.00000	.00000
29	828.7	15.7	4.553	26315.	.00000	.00000	.06560	.24944	.57676	.10130	.00688	.00000	.00000	.00000	.00000	.00000
30	828.7	15.7	4.342	25095.	.00000	.00000	.06560	.24944	.57676	.10130	.00688	.00000	.00000	.00000	.00000	.00000
31	415.4	15.2	4.342	10964.	.00000	.00000	.06560	.24944	.57676	.10130	.00688	.00000	.00000	.00000	.00000	.00000
32	828.7	15.7	.211	1220.	.00000	.00000	.06560	.24944	.57676	.10130	.00688	.00000	.00000	.00000	.00000	.00000
33	504.5	15.2	.211	678.	.00000	.00000	.06560	.24944	.57676	.10130	.00688	.00000	.00000	.00000	.00000	.00000
34	419.6	15.2	4.553	11643.	.00000	.00000	.06560	.24944	.57676	.10130	.00688	.00000	.00000	.00000	.00000	.00000
35	312.6	14.7	4.553	7937.	.00000	.00000	.06560	.24944	.57676	.10130	.00688	.00000	.00000	.00000	.00000	.00000
36	312.6	15.2	20.276	35344.	.00000	.00000	.06560	.24944	.57676	.10130	.00688	.00000	.00000	.00000	.00000	.00000

SLAG 1.959 lb/sec 744. Btu/sec

Table 4.5.b

Advanced Design Units Output (P = 500 psia) using Fluid-Bed O_2 Gasifier

```
COMPRESSOR # 1
     # OF STAGES =  10     PRESSURE RATIO =      7.639     COMPRESSOR EFFICIENCY =  .868
     WORK OF COMPRESSION =     51456. Btu/sec

COMPRESSOR # 2
     # OF STAGES =  10     PRESSURE RATIO =      4.630     COMPRESSOR EFFICIENCY =  .868
     WORK OF COMPRESSION =     37132. Btu/sec

TOTAL WORK OF COMPRESSION =       88588. Btu/sec,   93.5 MW

TURBINE RESULTS:
     # OF STAGES =  10     EXPANSION RATIO =     31.210     TURBINE EFFICIENCY =  .880
     TURBINE WORK =   226649. Btu/sec,  239.1 MW

HEAT EXCHANGER # 1          CALCULATED UA =   1748.338
     APPROACH TEMPERATURE AT HOT INLET  =   50.6 F       APPROACH TEMPERATURE AT HOT OUTLET =   25.0 F
     HOT STREAM DELTA P =   .5 PSIA      COLD STREAM DELTA P =  2.0 PSIA

HEAT EXCHANGER # 2          CALCULATED UA =    426.602
     APPROACH TEMPERATURE AT HOT INLET  =   42.8 F       APPROACH TEMPERATURE AT HOT OUTLET =   25.0 F
     HOT STREAM DELTA P =   .5 PSIA      COLD STREAM DELTA P =  2.0 PSIA

HEAT EXCHANGER # 3          CALCULATED UA =    124.939
     APPROACH TEMPERATURE AT HOT INLET  =   34.9 F       APPROACH TEMPERATURE AT HOT OUTLET =   25.0 F
     HOT STREAM DELTA P =   .5 PSIA      COLD STREAM DELTA P =  5.0 PSIA

HEAT EXCHANGER # 4          CALCULATED UA =     17.478
     APPROACH TEMPERATURE AT HOT INLET  =   25.0 F       APPROACH TEMPERATURE AT HOT OUTLET =   38.0 F
     HOT STREAM DELTA P =   .5 PSIA      COLD STREAM DELTA P =  2.0 PSIA

COMBUSTOR OUTPUT
     AIRRATIO =  3.721          FINAL N2ORATIO =  .1452
     FUEL INLET TEMPERATURE =   785.8 F     WET AIR INLET TEMPERATURE =   778.1 F     TURBINE INLET TEMPERATURE =  2100.0 F

BOILER OUTPUT
     APPROACH TEMPERATURE AT BFW INLET  =   25.0 F       APPROACH TEMPERATURE AT BFW OUTLET =   75.5 F
     BFW FLOW =   6.042 lbmol/sec     GASIFIED COAL QUENCH WATER FLOW =  1.926lbmol/sec     AIR QUENCH WATER FLOW =  3.888 lbmol/sec
     STEAM FLOW =  .228 lbmol/sec     STEAM TEMPERATURE = 466.6 deg F

AIR QUENCH OUTPUT
     AIR INLET TEMPERATURE =   430.1 deg F      QUENCHED AIR OUTLET TEMPERATURE =   287.6 deg F
     WATER INLET TEMPERATURE =  439.1 deg F     WATER OUTLET TEMPERATURE =  287.6
     WATER EVAPORATED IN THE AIR QUENCH =  2.019 lbmol/sec

GASIFIED COAL QUENCH OUTPUT
     GASIFIED COAL INLET TEMPERATURE =  1850.0 deg F     QUENCHED GAS EXIT TEMPERATURE =   389.0 deg F
     AMOUNT OF H2S REMOVED =  .0261 lbmol/sec            AMOUNT OF NH3 REMOVED =  .0045 lbmol/sec
     WATER EVAPORATED IN THE GASIFIED COAL QUENCH =  1.926 lbmol/sec

SYSTEM OUTPUT

     NET WORK OUT ( NOT INCLUDING O2 PRODUCTION ) =      138061. Btu/sec,    145.7 MW

     ENERGY PENALTY FOR OXYGEN USED IN GASIFICATION =     7858. Btu/sec,    8.29 MW

     HEAT RATE =    7749. Btu / kWhr

     FRACTION OF TOTAL COMPRESSION WORK ACCOMPLISHED IN COMPRESSOR NO.1 =  .5808

     SYSTEM EFFICIENCY ( BASED ON ILLINOIS COAL NO.6, 12774 Btu/lb DRY HHV ) =    43.48 %
```

Table 4.6.a

Advanced Design Flowsheet (P = 500 psia) using Fluid-Bed Air Gasifier

SIMULATION OUTPUT (BASED ON 1000 SHORT TONS / DAY OF COAL)

STREAM NUMBER	TEMP (degF)	PRESS (psia)	FLOW (lbmol/sec)	ENTHALPY (Btu/sec)	STREAM MOLE FRACTIONS CH4	C2H6	CO2	H2Ov	N2	O2	Ar	CO	H2	H2S	NH3	H2Oliq
1	60.0	14.6	12.757	-1555.	.00000	.00000	.00033	.00990	.77311	.20739	.00925	.00000	.00000	.00000	.00000	.00000
2	620.4	140.0	12.757	49120.	.00000	.00000	.00033	.00990	.77311	.20739	.00925	.00000	.00000	.00000	.00000	.00000
3	85.0	138.0	10.231	254.	.00000	.00000	.00033	.00990	.77311	.20739	.00925	.00000	.00000	.00000	.00000	.00000
4	362.7	500.0	10.231	20110.	.00000	.00000	.00033	.00990	.77311	.20739	.00925	.00000	.00000	.00000	.00000	.00000
5	274.4	500.0	11.290	14661.	.00000	.00000	.00030	.10273	.70063	.18795	.00838	.00000	.00000	.00000	.00000	.00000
6	777.9	498.0	11.290	57346.	.00000	.00000	.00030	.10273	.70063	.18795	.00838	.00000	.00000	.00000	.00000	.00000
7	1850.0	500.0	4.190	57878.	.00954	.00000	.03835	.04111	.48080	.00000	.00000	.26842	.15552	.00626	.00000	.00000
8	386.1	500.0	7.868	15479.	.00508	.00000	.02042	.49269	.25604	.00000	.00000	.14294	.08282	.00000	.00000	.00000
9	466.6	500.0	.474	1071.	.00000	.00000	.00000	1.00000	.00000	.00000	.00000	.00000	.00000	.00000	.00000	.00000
10	390.8	500.0	8.342	16550.	.00479	.00000	.01926	.52149	.24151	.00000	.00000	.13483	.07812	.00000	.00000	.00000
11	789.9	498.0	8.342	45726.	.00479	.00000	.01926	.52149	.24151	.00000	.00000	.13483	.07812	.00000	.00000	.00000
12	386.1	500.0	.026	55.	.00000	.00000	.00000	.00000	.00000	.00000	.00000	.00000	.00000	1.00000	.00000	.00000
13	386.1	500.0	.000	0.	.00000	.00000	.00000	.00000	.00000	.00000	.00000	.00000	.00000	.00000	1.00000	.00000
14	60.0	505.0	5.159	-99189.	.00000	.00000	.00000	.00000	.00000	.00000	.00000	.00000	.00000	.00000	.00000	1.00000
15	466.6	500.0	3.704	-43087.	.00000	.00000	.00000	.00000	.00000	.00000	.00000	.00000	.00000	.00000	.00000	1.00000
16	466.6	500.0	.705	1396.	.00000	.00000	.00000	1.00000	.00000	.00000	.00000	.00000	.00000	.00000	.00000	.00000
17	466.6	500.0	.231	523.	.00000	.00000	.00000	1.00000	.00000	.00000	.00000	.00000	.00000	.00000	.00000	.00000
18	822.6	498.0	.231	1376.	.00000	.00000	.00000	1.00000	.00000	.00000	.00000	.00000	.00000	.00000	.00000	.00000
19	466.6	500.0	.750	-8719.	.00000	.00000	.00000	.00000	.00000	.00000	.00000	.00000	.00000	.00000	.00000	1.00000
20	406.4	500.0	4.314	-55382.	.00000	.00000	.00000	.00000	.00000	.00000	.00000	.00000	.00000	.00000	.00000	1.00000
21	274.4	505.0	3.255	-49932.	.00000	.00000	.00000	.00000	.00000	.00000	.00000	.00000	.00000	.00000	.00000	1.00000
22	60.0	505.0	.309	-5936.	.00000	.00000	.00000	.00000	.00000	.00000	.00000	.00000	.00000	.00000	.00000	1.00000
23	256.0	505.0	3.564	-55869.	.00000	.00000	.00000	.00000	.00000	.00000	.00000	.00000	.00000	.00000	.00000	1.00000
24	393.4	500.0	3.564	-46661.	.00000	.00000	.00000	.00000	.00000	.00000	.00000	.00000	.00000	.00000	.00000	1.00000
25	85.0	138.0	12.757	342.	.00000	.00000	.00033	.00990	.77311	.20739	.00925	.00000	.00000	.00000	.00000	.00000
26	85.0	138.0	2.516	62.	.00000	.00000	.00033	.00990	.77311	.20739	.00925	.00000	.00000	.00000	.00000	.00000
27	367.8	510.0	2.516	5038.	.00000	.00000	.00033	.00990	.77311	.20739	.00925	.00000	.00000	.00000	.00000	.00000
28	2100.0	490.0	18.522	319960.	.00000	.00000	.07173	.32464	.53613	.06237	.00511	.00000	.00000	.00000	.00000	.00000
29	847.6	15.7	18.522	111530.	.00000	.00000	.07173	.32464	.53613	.06237	.00511	.00000	.00000	.00000	.00000	.00000
30	847.6	15.7	9.793	58969.	.00000	.00000	.07173	.32464	.53613	.06237	.00511	.00000	.00000	.00000	.00000	.00000
31	299.4	15.2	9.793	16286.	.00000	.00000	.07173	.32464	.53613	.06237	.00511	.00000	.00000	.00000	.00000	.00000
32	847.6	15.7	8.729	52561.	.00000	.00000	.07173	.32464	.53613	.06237	.00511	.00000	.00000	.00000	.00000	.00000
33	847.6	15.7	8.432	50771.	.00000	.00000	.07173	.32464	.53613	.06237	.00511	.00000	.00000	.00000	.00000	.00000
34	415.8	15.2	8.432	21596.	.00000	.00000	.07173	.32464	.53613	.06237	.00511	.00000	.00000	.00000	.00000	.00000
35	847.6	15.7	.297	1791.	.00000	.00000	.07173	.32464	.53613	.06237	.00511	.00000	.00000	.00000	.00000	.00000
36	491.7	15.2	.297	938.	.00000	.00000	.07173	.32464	.53613	.06237	.00511	.00000	.00000	.00000	.00000	.00000
37	418.4	15.2	8.729	22535.	.00000	.00000	.07173	.32464	.53613	.06237	.00511	.00000	.00000	.00000	.00000	.00000
38	281.6	14.7	8.729	13328.	.00000	.00000	.07173	.32464	.53613	.06237	.00511	.00000	.00000	.00000	.00000	.00000
39	291.0	15.2	18.522	29611.	.00000	.00000	.07173	.32464	.53613	.06237	.00511	.00000	.00000	.00000	.00000	.00000

SLAG 1.959 lb/sec 746. Btu/sec

Table 4.6.b

Advanced Design Units Output (P = 500 psia) using Fluid-Bed Air Gasifier

```
COMPRESSOR # 1
     # OF STAGES =  10     PRESSURE RATIO =      9.722     COMPRESSOR EFFICIENCY =  .868
     WORK OF COMPRESSION =     50788. Btu/sec

COMPRESSOR # 2
     # OF STAGES =  10     PRESSURE RATIO =      3.623     COMPRESSOR EFFICIENCY =  .868
     WORK OF COMPRESSION =     20285. Btu/sec

COMPRESSOR # 3
     # OF STAGES =  10     PRESSURE RATIO =      3.696     COMPRESSOR EFFICIENCY =  .868
     WORK OF COMPRESSION =      5083. Btu/sec

TOTAL WORK OF COMPRESSION =       76155. Btu/sec,   80.3 MW

TURBINE RESULTS:
     # OF STAGES =  10     EXPANSION RATIO =     31.210     TURBINE EFFICIENCY =  .880
     TURBINE WORK =   208438. Btu/sec,  219.9 MW

HEAT EXCHANGER # 1          CALCULATED UA =    978.686
     APPROACH TEMPERATURE AT HOT INLET  =   69.7 F       APPROACH TEMPERATURE AT HOT OUTLET =   25.0 F
     HOT STREAM DELTA P =   .5 PSIA      COLD STREAM DELTA P =  2.0 PSIA

HEAT EXCHANGER # 2          CALCULATED UA =    746.187
     APPROACH TEMPERATURE AT HOT INLET  =   57.7 F       APPROACH TEMPERATURE AT HOT OUTLET =   25.0 F
     HOT STREAM DELTA P =   .5 PSIA      COLD STREAM DELTA P =  2.0 PSIA

HEAT EXCHANGER # 3          CALCULATED UA =    363.872
     APPROACH TEMPERATURE AT HOT INLET  =   25.0 F       APPROACH TEMPERATURE AT HOT OUTLET =   25.6 F
     HOT STREAM DELTA P =   .5 PSIA      COLD STREAM DELTA P =  5.0 PSIA

HEAT EXCHANGER # 4          CALCULATED UA =     34.032
     APPROACH TEMPERATURE AT HOT INLET  =   25.0 F       APPROACH TEMPERATURE AT HOT OUTLET =   25.1 F
     HOT STREAM DELTA P =   .5 PSIA      COLD STREAM DELTA P =  2.0 PSIA

COMBUSTOR OUTPUT
     AIRRATIO =  1.215          FINAL H2ORATIO =  .1145
     FUEL INLET TEMPERATURE =   789.9 F     WET AIR INLET TEMPERATURE =   777.9 F     TURBINE INLET TEMPERATURE =  2100.0 F

BOILER OUTPUT
     APPROACH TEMPERATURE AT BFW INLET  =   25.0 F       APPROACH TEMPERATURE AT BFW OUTLET =  153.8 F
     BFW FLOW =   5.159 lbmol/sec     GASIFIED COAL QUENCH WATER FLOW =  3.704lbmol/sec     AIR QUENCH WATER FLOW =   .750 lbmol/sec
     STEAM FLOW =  .705 lbmol/sec     STEAM TEMPERATURE = 466.6 deg F

AIR QUENCH OUTPUT
     AIR INLET TEMPERATURE =   362.7 deg F      QUENCHED AIR OUTLET TEMPERATURE =   274.4 deg F
     WATER INLET TEMPERATURE =  406.4 deg F     WATER OUTLET TEMPERATURE =  274.4
     WATER EVAPORATED IN THE AIR QUENCH =  1.058 lbmol/sec

GASIFIED COAL QUENCH OUTPUT
     GASIFIED COAL INLET TEMPERATURE =  1850.0 deg F     QUENCHED GAS EXIT TEMPERATURE =   386.1 deg F
     AMOUNT OF H2S REMOVED =  .0262 lbmol/sec            AMOUNT OF NH3 REMOVED =  .0000 lbmol/sec
     WATER EVAPORATED IN THE GASIFIED COAL QUENCH =  3.704 lbmol/sec

SYSTEM OUTPUT

     NET WORK OUT =      132282. Btu/sec,    139.6 MW

     HEAT RATE =    7627. Btu / kWhr

     FRACTION OF TOTAL COMPRESSION WORK ACCOMPLISHED IN COMPRESSOR NO.1 =  .6669

     SYSTEM EFFICIENCY ( BASED ON ILLINOIS COAL NO.6, 12774 Btu/lb DRY HHV ) =    44.17 %
```

In Figure 4.2, which represents the advanced design with a Texaco O_2 gasifier, no modifications are necessary since the gasifier uses no steam and in both gasifier cases that use O_2 it is impractical to include the air-separation unit on the figure. Figures 4.3.a and 4.4 show the addition of an additional heat exchanger (HX-4), which was used to superheat the steam sent to the respective gasifiers. Figure 4.3.b is an alternative design to 4.3.a (both designs use the fluid-bed O_2 gasifier) and includes a boiler heated by turbine exhaust for use in those cases where insufficient steam is produced in the boiler to supply the gasifier. To supply the compressed air used by the fluid-bed air gasifier, an additional compressor (C-3) is added to the design shown in Figure 4.4. In Figures 4.2 and 4.4, the streams numbered 19 and 22 respectively are shown with arrows indicating flow in two directions. At any particular set of operating parameters, water would flow only in one direction. Over the full range of parameters, it is sometimes necessary to reverse the direction of flow, *i.e.* to add or remove water to or from the system as required.

4.3.2 Effect of Compressor Loading

Figures 4.5, 4.6 and 4.7 show the performance of advanced-design systems using the Texaco O_2, fluid-bed O_2 and fluid-bed air gasifiers respectively over a broad range of compressor loadings and at system pressures ranging from 200 psia to 500 or 600 psia. A slight discontinuity is observed in the behavior of the fluid-bed O_2 gasifier (Figure 4.6), resulting in two separate sets of curves. These two sets of curves represent the performance of the two different configurations shown in Figures 4.3.a and 4.3.b, with dashed lines connecting curves at the same pressure to indicate the transition. The need for a different configuration is the result of the first-stage compressor supplying too low a fraction of the total compression work to generate sufficient steam in the boiler for the gasifier. It is thus necessary to use an alternative design, particularly at lower system pressures,

Figure 4.5

Variation of Advanced Design Efficiency* with Compressor Loading

Texaco O_2 Gasifier

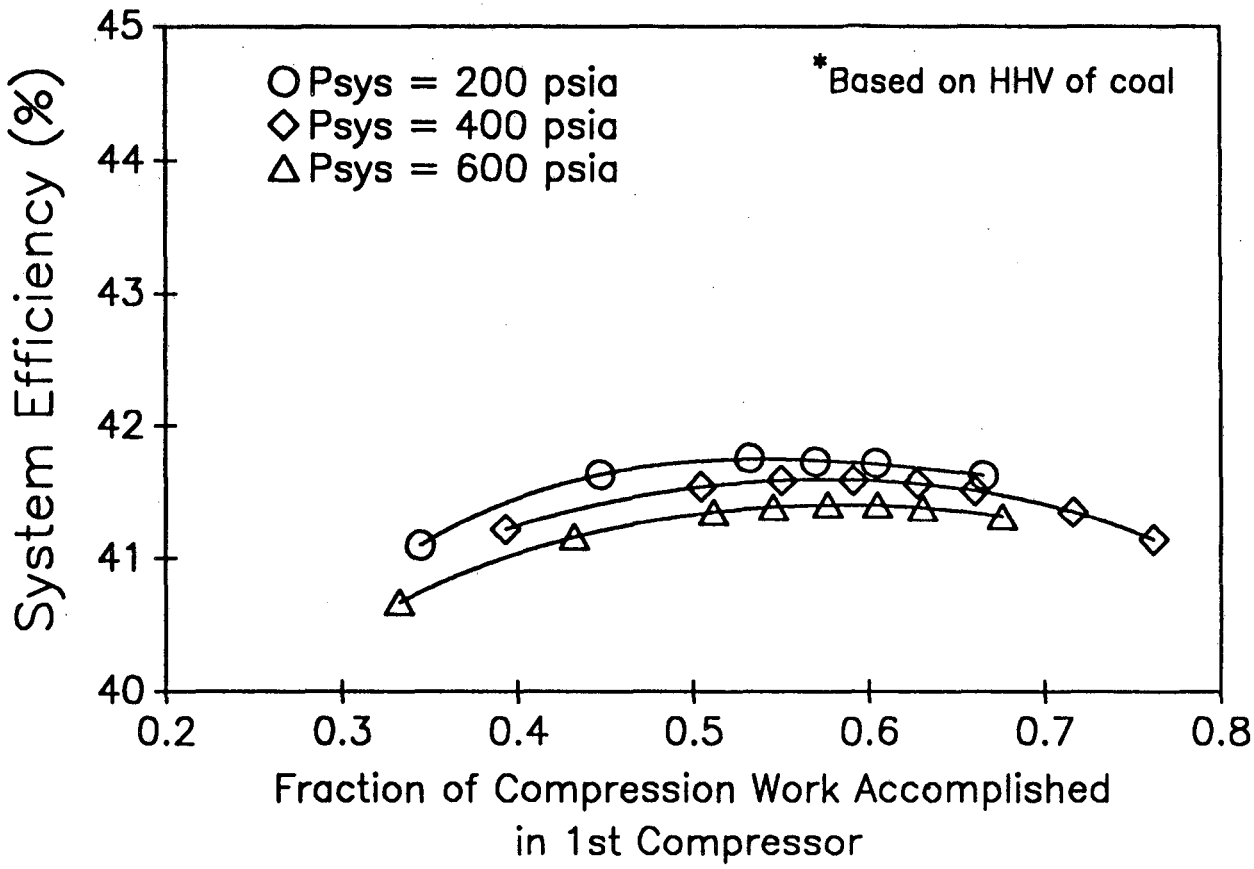

Figure 4.6

Variation of Advanced Design Efficiency* with Compressor Loading

Fluid–Bed O_2 Gasifier

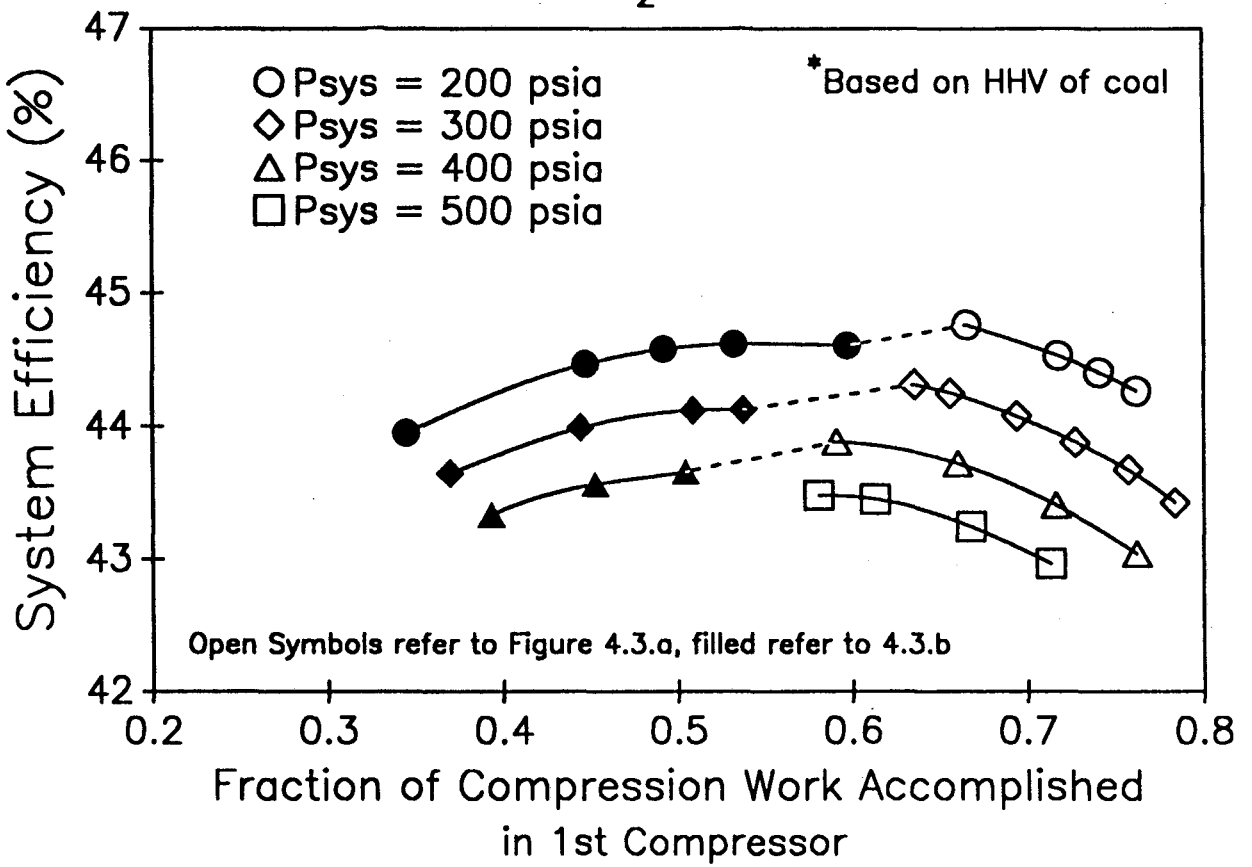

Figure 4.7

Variation of Advanced Design Efficiency* with Compressor Loading

Fluid–Bed Air Gasifier

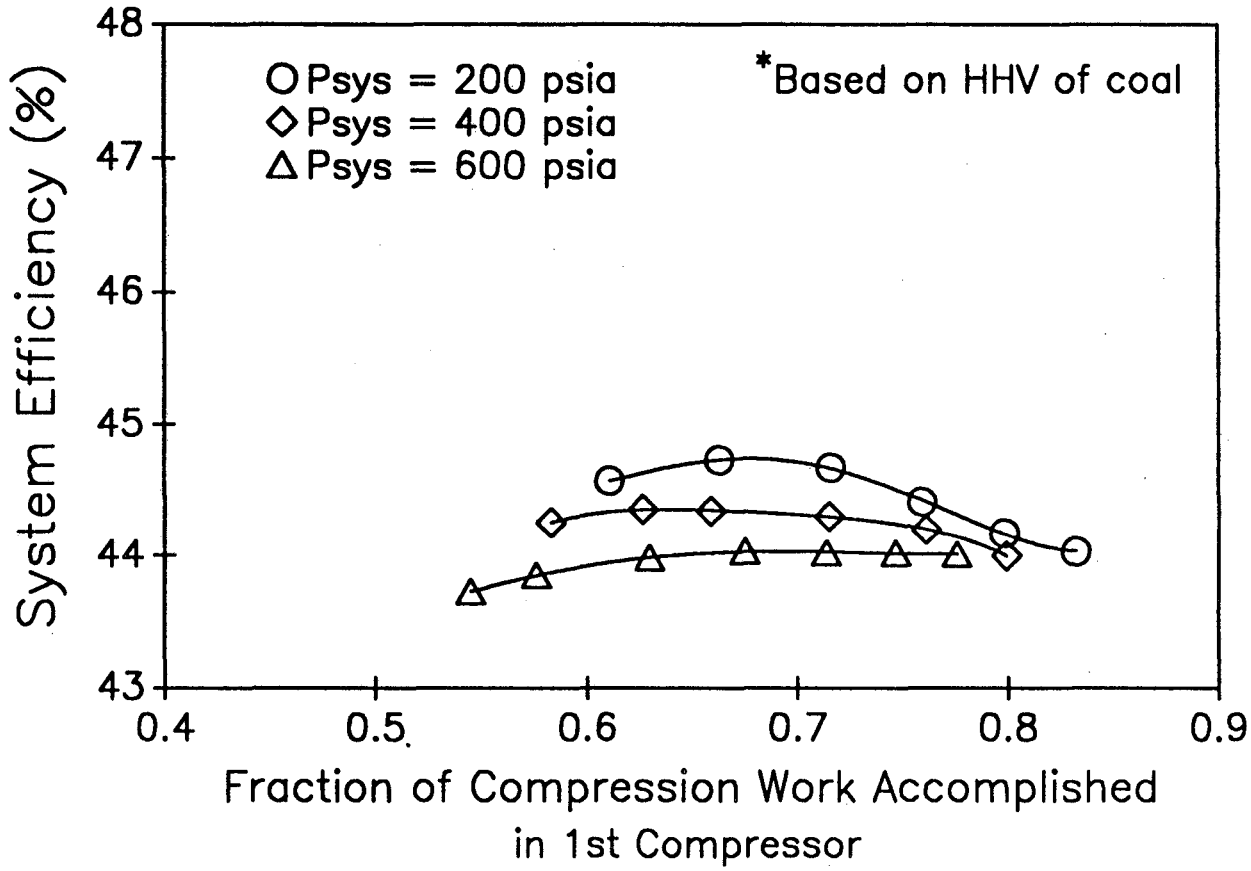

which produces gasifier steam in a separate boiler (labeled "Steam Boiler" in Figure 4.3.b), for the low compressor-loading cases. It is apparent from Figure 4.6 that system efficiency could be improved if an alternative design were not required to supply the gasifier with steam. Improved efficiency in the fluid-bed O_2 case could likely be achieved by modifying the gasifier so that it did not use a supply of steam, thus allowing a more even split of work between the air-compression stages.

Alternative designs are not needed for the Texaco O_2 and fluid-bed air configurations. The Texaco O_2 gasifier requires no steam and thus system performance is not dependent on steam being produced in the boiler. The fluid-bed air case produces sufficient gasifier steam at its optimum compressor loading, which is higher than for the other two gasifiers. Compressor loadings significantly below the optimum would require an alternative design for the fluid-bed air case, but such a design would not be as efficient. The optimum compressor loading is somewhat higher in the fluid-bed air case because the third compressor, operating in parallel with the second-stage compressor, supplies air to the gasifier and not the combustor, thus air from the third compressor does not supply low-temperature heat to the system. A higher compressor loading thus retains more low-temperature heat in the system, making the higher compressor loading more efficient.

As can be seen in Figure 4.5, with the Texaco O_2 gasifier the advanced design system reaches its maximum performance when roughly 55 percent of the total work of compression is provided in the first-stage compressor. This loading is somewhat lower than the values for the fluid-bed O_2 and air cases, which have optimum loadings of around 65 percent and 70 percent respectively in the first-stage compressor. This difference arises because the Texaco gasifier does not require a flow of steam to feed the gasifier, allowing an even split of work

between the two compressor stages. The even split of compression work in the Texaco O_2 case allows for little if any steam production, which is not needed by the Texaco O_2 gasifier. The optimum compression loading thus corresponds approximately to an even split of work between the two compressor stages, which minimizes the total work of compression.

Optimum compressor loading is achieved with the proper balance between sensible heat in the compressed air leaving the first compressor and the total work of compression. When too little compression is performed in the first-stage compressor, air leaving the first stage has insufficient sensible heat, thus the fluid-bed cases suffer from insufficient steam production and the Texaco case suffers from sub-saturated water being sent to the coal-gas quench. Conversely, too much work done by the first-stage compressor begins to minimize the advantage of intercooling and thus increases the total work of compression.

4.3.3 Effect of System Pressure

Figure 4.8 shows the effect of system pressure on the three advanced-design cases. The results obtained in this investigation show that the advanced design obtains its maximum performance at a system pressure of about 200 psia, with the two fluid-bed gasifiers once again giving a significantly higher system efficiency than the Texaco entrained-flow gasifier. It is interesting to note that system efficiency is not extremely sensitive to system pressure in advanced design systems, particularly in the Texaco O_2 case. This insensitivity is a result of the manner in which the advanced design recycles the waste heat in the turbine exhaust. At low system pressures the turbine exhaust is relatively hot (around 1100°F), and the incoming wet air and fuel streams are preheated to high temperatures. The high inlet temperatures of these streams to the combustor cause the required excess flow of compressed air to be greater to meet the inlet temperature limitation of the turbine. Thus lower system pressures require a greater flow of

Figure 4.8

Variation of Advanced Design Efficiency* with System Pressure

Three Different Gasifiers at Optimal Compressor Loading

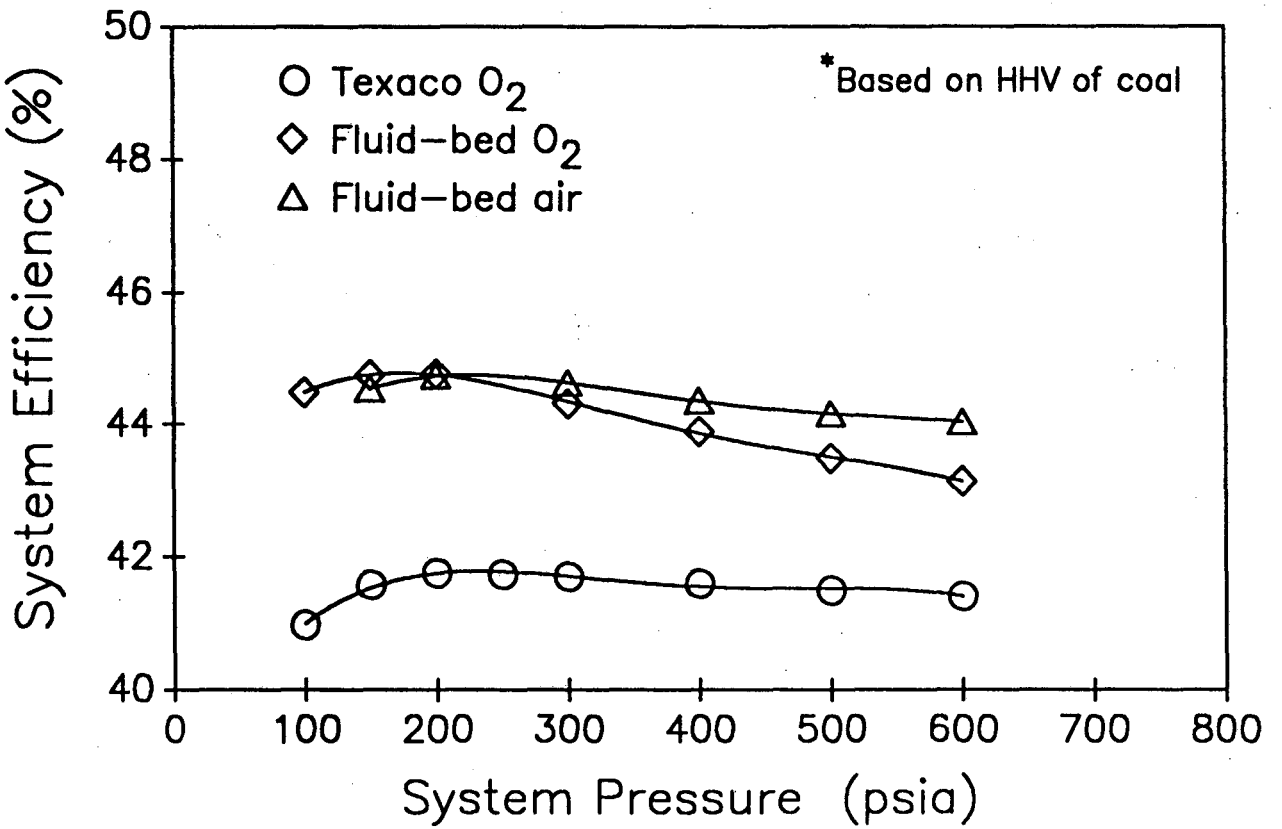

compressed air. The opposite is true for higher-pressure cases, where a lower requirement for excess air results from lower turbine-exhaust temperatures. With higher-pressure cases requiring lower air flows at higher compression, and with the opposite being true for lower pressure cases, the total work of compression is relatively independent of system pressure.

Though the thermal efficiency of the advanced design is somewhat independent of system pressure, there is still an optimum system pressure, which occurs around 200 psia for all three cases. The optimum system pressure results from a trade-off between energy lost from the compressor intercooler and lost in the stack gas in the form of higher stack temperatures and higher water vapor contents. At low system pressure, the intercooler water flow is higher due to the large flow of compressed air. More water is heated in the intercooler than can be used by the system, thus heat is lost to a cooling tower. At higher system pressures, the two water quenches operate at higher temperatures, evaporating more water into the air and fuel streams and making them hotter before heat exchange with the turbine exhaust. With more water evaporated in the quenches, more heat is lost from the system as latent heat of water vapor. The stack gas is hotter at higher system pressures because the turbine exhaust is cooled with warmer water streams. The optimum system pressure thus minimizes the energy lost from the system in the stack gas and in excess preheated water.

4.3.4 Relative Gasifier Performance

Higher thermal efficiencies for the fluid-bed gasifiers, which occur in the ISTIG design cases, also occur in the advanced-design cases for much the same reasons. The Texaco O_2 gasifier produces a coal-gas stream which has a higher fraction of its carbon converted to CO_2 rather than to desirable CO because a higher partial combustion occurs. The energy content of the coal gas is thus lower, causing the thermal efficiency of the system to be lower. It is interesting

to observe that both fluid-bed gasifiers yield essentially the same optimum thermal efficiency, though the air-fed case has a lower decrease in efficiency with higher system pressures. This is because at higher pressures the air-fed case is able to match the intercooler water flow with the system's need for water, whereas the O_2-fed case still sends some water to a cooling tower. With both gasifiers having about equal system efficiencies, the air-fed gasifier is the economically advantageous choice as it does not require a cryogenic separation facility.

Figure 4.9 shows a comparison of the three different methods of heat recovery that have been investigated in this study: the ISTIG full-quench, the ISTIG partial-quench and the advanced design. The Texaco O_2 gasifier was used in each case. The advanced-design method of heat recovery, which incorporates a full aqueous quench of the coal gas, clearly results in superior system performance, achieving both a significantly higher thermal efficiency and a lower sensitivity to system pressure.

Figure 4.9

Variation of Coal–Gas System Efficiency* with System Pressure

Three Different Heat–Recovery Methods at Optimal Compressor Loading

Texaco O_2 Gasifier

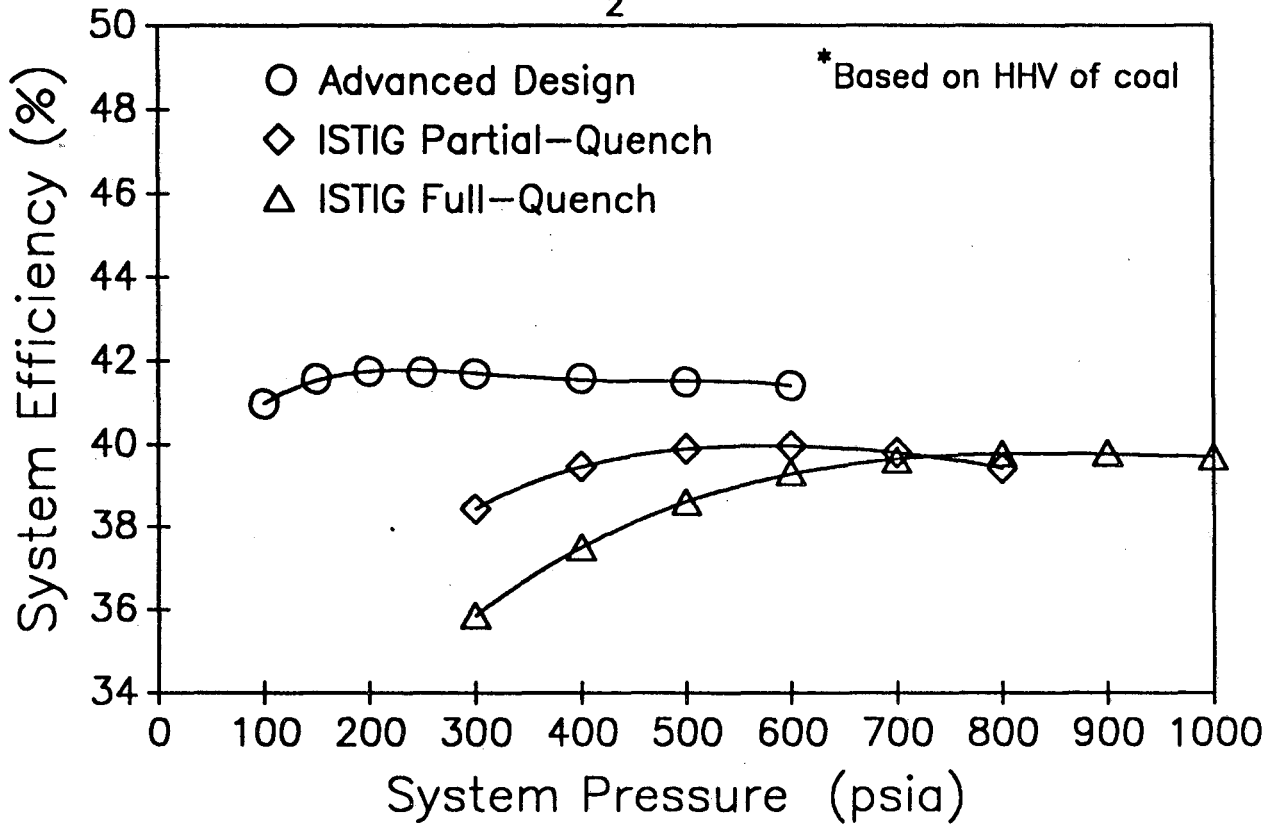

Chapter 5 CAPITAL COSTS OF THE ISTIG AND ADVANCED DESIGNS

The primary goal in the development of the advanced design has been to improve the system efficiency while incorporating the full-quench method, as described above in this study. There are of course other major concerns when actually considering a new technology, such as the capital investment required to construct a plant that would use the new technology. A complete analysis of the capital investment required to build actual operating facilities of the various systems modeled in this study would be very laborious and also somewhat premature. However, an estimate of the relative capital investments will help to guide the development of the technology further.

The greatest difference in capital costs between the ISTIG and advanced design systems will undoubtedly be the equipment involved in the heat-recovery sections. The temperature profiles and heat-exchanger flows are substantially different in the two designs, which result in significantly different heat-exchange areas. Insufficient information is available for an analysis of the capital costs of either the full-quench or partial-quench clean-up methods themselves at this point, though lower operating temperatures and continuous operation will likely favor the full-quench. Therefore this investigation of capital costs will emphasize the differences in heat-exchange equipment. Significant differences will also exist between the sizes of compressors and turbines used in each design, which will be addressed in this study by comparing the flows of compressed air and turbine exhaust.

The capital cost of each heat-recovery system will be closely related to the heat-exchange area of each system. Therefore, Tables 5.1.a through 5.4.a were prepared to compare the thermal efficiencies and heat-exchange areas of each design, based on a coal consumption of 1000 tons per day. Tables 5.1.b through 5.4.b show the compressor and turbine flows, and the amount of water evaporated

into the air and coal-gas streams in each case. Table 5.5 then compares the installed heat-exchange capital with the annual value of electric power for each case. Heat-exchange areas are determined using the heat-transfer coefficients stated in section 2.3.5 of Chapter 2. Purchased cost is calculated using a value of 11 dollars per square foot of tube-side heat-exchange area (Louks, 1987), assuming the use of finned-tube heat exchangers. A factor of 3.2 (Guthrie, 1977) is used to determine the installed cost of the heat-exchange systems from the purchased cost.

System characteristics of the ISTIG partial-quench design with three different gasifiers that significantly affect capital costs are shown in Table 5.1.a,b. The system pressure used for each gasifier case of Table 5.1.a,b was chosen to show the highest thermal efficiency obtainable with each gasifier in an ISTIG design. These system pressures correspond well with system pressures of existing ISTIG systems. Tables 5.2.a,b and 5.3.a,b show the characteristics for the advanced design with the three gasifiers at the optimum system pressure of 200 psia and at the higher system pressure of 500 psia.

A system pressure of 200 psia maximizes the thermal efficiency of an advanced design system. However, at that pressure the heat-exchange area of the advanced design is very large, so the system characteristics at 500 psia are listed for comparison. The high system pressure of 500 psia reduces the heat-exchange area in addition to being the pressure currently proposed for ISTIG systems. Since the heat-exchange area of the advanced design is dependent on system pressure, as is the thermal efficiency, a rigorous cost analysis would be required to determine the optimal system pressure for a particular advanced-design case. The ISTIG design and the advanced design at the two system pressures are compared in Table 5.4.a,b, with each case using the Texaco O_2 gasifier. All cases examined in this chapter were at their optimum compressor loadings.

5.1 ISTIG and Advanced Design Comparison

The most significant difference between thermally optimized ISTIG and advanced design systems is the heat-exchange area required by each system. The area required by the advanced design at its optimum system pressure is roughly a factor of four to five times greater than that of the ISTIG design, as can be seen in Table 5.4.a and by comparing Tables 5.1.a and 5.2.a. However, as was mentioned in Chapter 4, the thermal efficiency of the advanced design is relatively insensitive to system pressure, whereas the compressor and turbine flows vary inversely with system pressure (see Tables 5.1.b, 5.2.b and 5.4.b). Compressor flows at 500 psia range from only 68 to 72 percent of those at 200 psia, while turbine flows at 500 psia are in each case 78 percent of those at 200 psia. These reduced flows, plus the lower turbine-exhaust temperatures that occur at high system pressures, as discussed in section 4.3.3 of Chapter 4, result in a reduction in heat exchange between feed and exhaust flows. Thus the advanced design at 500 psia has roughly half the heat-exchange area of the 200 psia case, as shown in Table 5.4.a. The 500 psia advanced-design case shows only a two-fold increase in required area over the ISTIG partial-quench design (compare Tables 5.1.a and 5.3.a).

Advanced design systems evaporate more water than ISTIG design systems, illustrating the means by which the advanced design recovers more low-temperature heat. The advanced design cases at 500 psia evaporate from 6 to 8 percent more water than those at 200 psia, and evaporate from 8 to 31 percent more water than the ISTIG design cases, with the fluid-bed O_2 case showing the least increase and the fluid-bed air case the greatest. These results can be seen in Tables 5.1.b through 5.4.b. The greater evaporation of water in the advanced design results from greater recovery of low-temperature heat, and is evidenced by lower stack-gas temperatures.

A significant impact on capital costs will also result from the differences

in the compressor and turbine flows, which are also listed in Tables 5.1.b through 5.4.b. The 200 psia advanced design case has significantly higher compressor and turbine flows than the ISTIG design. However, due to the inverse relationship of system pressure and compressor and turbines flows in the advanced design, the 500 psia cases show both lower compressor and turbine flows than the ISTIG design. These differences in compressor and turbine flows (and hence compressor and turbine sizes) would have significant impacts on the capital costs of the various different cases.

5.2 Gasifier Comparisons

The heat-exchange areas for each combination of gasifier and heat-recovery design are shown in Tables 5.1.a through 5.4.a. The impacts that these different gasifiers have on the flows and thermal efficiencies of each case are discussed in Chapters 3 and 4 of this study. It is useful to examine the differences in heat-exchange capital that would result from the use of each gasifier.

The heat-exchange areas of the ISTIG cases vary from the Texaco O_2 gasifier case, which needs the least area, to the fluid-bed air gasifier which needs the most (seen in Table 5.1.a). However, the ISTIG design requires comparatively little heat-exchange area compared to the advanced design and so the differences between ISTIG designs are not very significant. In the advanced design, the fluid-bed O_2 case requires the largest area whereas the fluid-bed air case requires the least, as shown in both Tables 5.2.a and 5.3.a. The fluid-bed air case has the lowest heat-exchange area of the advanced-design cases primarily because it has the lowest air flow to the combustor, which results from the large amount of diluent N_2 already in the coal-gas.

In every case examined, the fluid-bed O_2 gasifier consistently had the largest compressor and turbine flows and the lowest amount of water evaporated. The fluid-bed O_2 gasifier produces a coal-gas stream that is smaller than that of

Table 5.1.a

Heat-Exchange Areas of the ISTIG Partial-Quench Design*

for Systems using Three Different Gasifiers

	Texaco Oxygen-fed (P = 600psia)	Fluid-bed Oxygen-fed (P = 500psia)	Fluid-bed Air-fed (P = 500psia)
Thermal Efficiency, %	40.0	40.9	41.4
	Heat-Exchange Areas (sq ft x 1000)		
Gas-Liquid: (HX-1 + Economizer)	50.5	49.1	60.6
Boiler:	21.9	25.2	23.5
Gas-Gas: (Superheater)	5.9	7.6	7.1
Total Area:	78.2	81.9	91.2

* Optimal System Pressure and Compressor Loading

Table 5.1.b

Compressor, Turbine and BFW* Flows for the ISTIG Partial-Quench Design

for Systems using Three Different Gasifiers

	Texaco Oxygen-fed (P = 600psia)	Fluid-bed Oxygen-fed (P = 500psia)	Fluid-bed Air-fed (P = 500psia)
	System Flows (lbmol/sec)		
Compressor Flow	14.1	17.0	16.0
Turbine Flow	19.8	21.9	20.2
Water Evaporated in Process	4.7	3.9	4.2

*Boiler Feed Water

Table 5.2.a

Heat-Exchange Areas of the Advanced Design

for Systems using Three Different Gasifiers

	Texaco Oxygen-fed (P = 200psia)	Fluid-bed Oxygen-fed (P = 200psia)	Fluid-bed Air-fed (P = 200psia)
Thermal Efficiency, %	41.8	44.8	44.7
	Heat-Exchange Areas (sq ft x 1000)		
Gas-Liquid: (HX-3)	7.9	7.1	11.0
Boiler:	62.1	65.9	57.6
Gas-Gas: (HX-1, HX-2 + HX-4)	345.2	376.7	295.9
Total Area	415.2	449.8	364.5

* Optimal Compressor Loading

Table 5.2.b

Relative Compressor, Turbine and BFW Flows for the Advanced Design

for Systems using Three Different Gasifiers

	Texaco Oxygen-fed (P = 200psia)	Fluid-bed Oxygen-fed (P = 200psia)	Fluid-bed Air-fed (P = 200psia)
	System Flows (lbmol/sec)		
Compressor Flow	16.7	20.9	18.3
Turbine Flow	23.0	25.9	23.7
Water Evaporated in Process	5.3	3.9	5.1

Table 5.3.a

Heat-Exchange Areas of the Advanced Design*

for Systems using Three Different Gasifiers

	Texaco Oxygen-fed (P = 500psia)	Fluid-bed Oxygen-fed (P = 500psia)	Fluid-bed Air-fed (P = 500psia)
Thermal Efficiency, %	41.5	43.5	44.2
	Heat-Exchange Areas (sq ft x 1000)		
Gas-Liquid: (HX-3)	15.7	6.4	18.7
Boiler:	41.2	55.2	41.3
Gas-Gas: (HX-1, HX-2 + HX-4)	137.0	157.9	126.6
Total Area	193.9	219.5	186.7

* Optimal Compressor Loading

Table 5.3.b

Relative Compressor, Turbine and BFW Flows for the Advanced Design

for Systems using Three Different Gasifiers

	Texaco Oxygen-fed (P = 500psia)	Fluid-bed Oxygen-fed (P = 500psia)	Fluid-bed Air-fed (P = 500psia)
	System Flows (lbmol/sec)		
Compressor Flow	11.3	15.1	12.8
Turbine Flow	17.9	20.3	18.5
Water Evaporated in Process	5.6	4.2	5.5

Table 5.4.a

Heat-Exchange Areas of the ISTIG and Advanced Design*

using the Texaco O_2 Gasifier

	ISTIG Partial Quench (P = 600psia)	Advanced Design (P = 200psia)	Advanced Design (P = 500psia)
Thermal Efficiency, %	40.0	41.8	41.5
	Heat-Exchange Areas (sq ft x 1000)		
Gas-Liquid:	50.5	7.9	15.7
Boiler:	21.9	62.1	41.2
Gas-Gas:	5.9	345.2	137.0
Total Area	78.3	415.2	193.9

* Optimal Compressor Loading

Table 5.4.b

Relative Compressor, Turbine and BFW Flows for ISTIG and Advanced Designs

using the Texaco O_2 Gasifier

	ISTIG Partial Quench (P = 600psia)	Advanced Design (P = 200psia)	Advanced Design (P = 500psia)
	System Flows (lbmol/sec)		
Compressor Flow	14.1	16.7	11.3
Turbine Flow	19.8	23.0	17.9
Water Evaporated in Process	4.7	4.6	5.0

Table 5.5

Installed Heat-Exchange Capital Cost and Annual Income from Electric Power*

for ISTIG and Advanced Design Heat-Recovery Systems

Millions of Dollars

	ISTIG Partial Quench (P = 500 psia)	Advanced Design (P = 200 psia)	Advanced Design (P = 500 psia)
Texaco** O_2-Gasifier	2.75	14.62	6.82
Annual Value of Power	54.60	57.06	56.69
Fluid-Bed O_2-Gasifier	2.88	15.84	7.71
Annual Value of Power	55.93	61.20	59.41
Fluid-Bed Air-Gasifier	3.20	12.83	6.56
Annual Value of Power	56.50	61.12	60.36

* Electricity valued at $0.05 / kW-hr

** System Pressure = 600 psia

the fluid-bed air gasifier and cooler than that of the Texaco O_2 gasifier, as discussed in section 1.6 of Chapter 1. Thus the fluid-bed O_2 gasifier evaporates the least amount of water in the coal-gas quench. With the lowest evaporation of water, the fluid-bed O_2 case requires the highest air flow to the combustor to maintain the allowable turbine inlet temperature. Since air (mostly nitrogen) does not have as high a heat capacity as water vapor, more diluent nitrogen passes through the system, giving the fluid-bed O_2 gasifier case the highest turbine flow as well.

5.3 Heat-Exchange Capital Cost Summary

The installed heat-exchange capital costs and the annual value of electric power production for each case examined in Tables 5.1 through 5.4 are shown in Table 5.5. As mentioned previously in this chapter, the purchased costs of heat-exchangers are determined using an average cost of 11 dollars per square foot of tube-side heat-exchange area and installed costs are assumed to be 3.2 times the purchased costs. Electric power production values are based on the power output of each case (with each case using the same feed rate of coal) at a value of five cents per kilowatt-hour. It is interesting to note that an increase of one percentage point in thermal efficiency corresponds approximately to an increase in the yearly value of electric power produced of 1.4 million dollars, based on a coal consumption of 1000 tons per day.

The payback period for the additional heat-exchange capital required to install the advanced design rather than the ISTIG design varies with the gasifier used. The payback periods for the 200 psia advanced-design cases are 4.8, 2.5 and 2.1 years for the Texaco O_2, fluid-bed O_2 and fluid-bed air gasifiers respectively when compared to their respective ISTIG cases. For the 500 psia advanced design systems compared to the ISTIG systems, these periods are 2.0, 1.4 and 0.9 years.

Even the longest of these payback periods shows the attractiveness of the advanced design, while the best advanced-design system becomes economically more favorable than the ISTIG in the first year.

It will be necessary to find the best operating pressure for the advanced design. To find the true optimal system pressure would require a rigorous capital analysis, but comparing the 500 and 200 psia heat-exchange capital may give some indication of the proper value. From Table 5.5, it can be calculated that 21 years would be required in the Texaco O_2 case to justify using a system pressure of 200 psia, which maximizes thermal efficiency but significantly increases heat exchanger area. However, for the fluid-bed O_2 and air cases, these values are only 4.5 and 8.3 years respectively. These payback periods indicate that, depending on the type of gasifier used, the optimal system pressure will be between 200 and 500 psia.

Chapter 6. CONCLUSIONS AND RECOMMENDATIONS

The computer simulation which was developed to model coal-gas turbine systems has successfully investigated several aspects of such systems. The assumptions used in the simulation, listed in Table 2.1, were generalized values but should not significantly affect the validity of the simulation results. For example, the assumed turbine and compressor efficiencies should have little effect on the comparative efficiencies of the ISTIG and advanced design cases. Some assumptions did slightly favor one case over another. The assumption of equal heat-exchanger pressure drops for the turbine exhaust favored the advanced design, which has large heat-exchange areas. The ISTIG partial-quench case was favored by the assumption of zero pressure drop through the clean-up process, since the coal gas would probably have to flow through a packed bed and a filter as part of the clean-up process. On the whole, however, it is felt that the results presented in this study represent an accurate and enlightening description of the performance of feasible coal-gas turbine systems. The development of the advanced design, which forms the central core of this study, is shown to lead to a significant improvement in heat-recovery design and should have a noticeable impact on the future development of coal-gas turbine systems.

While the specific technologies that are necessary to clean coal gas at elevated temperatures are still being developed, an emphasis should be made towards developing those technologies that could be incorporated as part of a full-quench (medium-temperature) method of coal-gas clean-up. Even in ISTIG systems, where it was shown that full-quench clean-up results in system efficiencies that are somewhat lower than corresponding partial-quench systems at conventional pressures, the full-quench method would likely have several operating advantages which could offset the lower thermal efficiencies. Therefore, the current effort in developing higher temperature, partial-quench clean-up technologies should be

supplemented by developing technologies that could be used in the full-quench method of coal gas clean-up.

The incorporation of three different gasifiers into the ISTIG and advanced designs shows the significant effect that different methods of gasification have on the thermal efficiency of the two clean-up methods. The Texaco O_2 entrained-flow gasifier is clearly the least efficient in its conversion of coal to gaseous fuel and its use results in lower thermal efficiencies. Both fluid-bed gasifiers perform better than the Texaco O_2 gasifier, with the air-fed gasifier systems usually giving the highest thermal efficiency. Drawbacks to the fluid-bed gasifiers are their dependence on a supply of superheated steam and the fact that they do not fuse the mineral content of coal in their gasification step. The use of steam could possibly be eliminated by feeding the gasifiers wet oxidant streams, preheated by turbine exhaust, which would have enough H_2O for the gasification step. A rigorous study would need to be done to assess the impact of the environmentally less-desirable ash resulting from fluid-bed gasification to determine whether producing slag (fused ash) makes the Texaco gasifier an attractive alternative.

Since the fluid-bed air gasifier yields the highest thermal efficiency and does not need an air-separation facility, it appears to be the likely choice of gasifiers. The fluid-bed air gasifier improves the efficiency of the ISTIG partial-quench by 1.4 percentage points and improves the advanced design by 2.9 percentage points relative to the Texaco O_2 gasifier. At the optimum system pressure for the advanced design, there is no significant difference between the thermal efficiencies of the fluid-bed O_2 and fluid-bed air systems. At higher system pressures, the fluid-bed air system performs significantly better. Higher system pressures (around 500 psia) also appear to reduce capital costs of a fluid-bed air system significantly without dramatically lowering thermal efficiency.

The advanced design achieves a significant improvement in thermal effi-

ciency over the ISTIG full-quench design regardless of gasifier type, showing that the ISTIG design is not the most efficient design for a system using the full-quench method. The advanced design not only improves the efficiency of a system using full-quench clean-up, but also allows the attainment of thermal efficiencies even higher than those of the ISTIG with partial-quench clean-up. The advanced design combined with a fluid-bed air gasifier has an optimum thermal efficiency of 44.7 percent, 3.3 percentage points higher than the corresponding ISTIG system with partial-quench clean-up, and a full 6.8 percentage points higher than the Cool Water combined-cycle design. The only disadvantage of the advanced design is the increased heat-exchange area required relative to the ISTIG design. However, as was shown in Chapter 5, the payback period for the additional capital investment would be fairly short.

Future work on the advanced design should include a determination of the most economical system pressure, which would involve a more detailed analysis of capital investment than was presented in this study. It would also be very useful to modify the gasification step to enhance the performance of the advanced design. For example, it might be possible to use wet air that was heated by turbine exhaust to feed the fluid-bed gasifiers instead of having to supply superheated steam. Hotter gasification air would produce a coal-gas stream with a higher energy content than that currently produced, since less of the coal energy would be expended to heat the air to gasification temperature. Of course, future work should include the development of an H_2S-removal technology that could be effected in an aqueous scrub. Such an H_2S-removal technology would be ideally suited for use with the advanced design. While the advanced design is not yet a proven heat-recovery method, its advantages will likely lead to its use for future gas-turbine systems.

REFERENCES

Brandt, D.E., "Heavy Duty Turbopower: The MS7001F," *Mechanical Engineering*, 109 (7), 1987; pp. 28-37.

EPRI (Electric Power Research Institute), "Cost and Performance for commercial Applications of Texaco-Based Gasification-Combined-Cycle Plants, Volume 2: Design Details," *EPRI Report AP-3486*, Chapter 2; Palo Alto, CA 1984.

Guthrie, K.M., "Capital Cost Estimating," *Chemical Engineering*, **76** (6), (1977) pp.114-142.

Higdon, Charles R., "A Novel Heat Recovery Process for Improving the Thermal Efficiency of Gas Turbines in Electric Power Generation," *Masters Thesis*, Dept. of Chemical Engineering, University of California, Berkeley, CA, 1988.

Irvine, T.F. and Liley, P.E., *Steam and Gas Tables with Computer Equations*, Academic Press, Inc., New York, 1984; pp. 21-50.

Larson, E.D. and Williams, R.H., "Steam-Injected Gas Turbines," *Journal of Engineering for Gas Turbines and Power*, **109**; pp. 55-63 (1987).

Louks, B.M., Project Manager, Advanced Power Systems Division, Electric Power Research Institute, Palo Alto, California, personal communication, June 18, 1987.

Prausnitz, J.M., Lichtenhaler, R.N., and Azevedo, E.G., *Molecular Thermodynamics of Fluid-Phase Equilibria*, Second Edition, Prentice Hall, Inc., Englewood Cliffs, New Jersey, 1986; pp. 96-137.

APPENDIX

The Appendix to this report, a 37-page listing of the computer code used to simulate the flow configurations discussed above, is available upon request from:

Professor Scott Lynn
Department of Chemical Engineering
University of California
Berkeley, CA 94720-9989

LAWRENCE BERKELEY LABORATORY
TECHNICAL INFORMATION DEPARTMENT
1 CYCLOTRON ROAD
BERKELEY, CALIFORNIA 94720