UC 406
LBL-28189

Lawrence Berkeley Laboratory
UNIVERSITY OF CALIFORNIA

Accelerator & Fusion Research Division

Presented at the European Particle Accelerator Conference,
Nice, France, June 12–16, 1990, and
to be published in the Proceedings

On the Beam Impedance of Shallow Tapered Cavities

A.F. Jacob, G.R. Lambertson, and F. Voelker

June 1990

For Reference

Not to be taken from this room

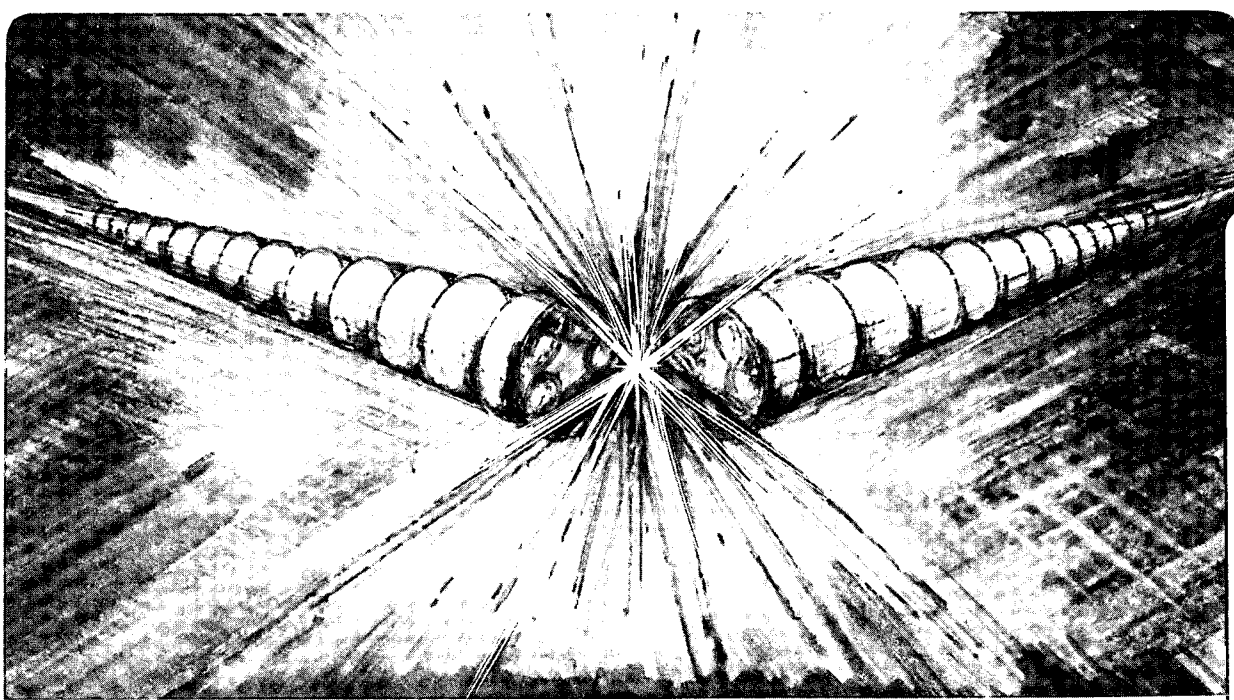

LBL-28189
Copy 1
Bldg. 50 Library.

Prepared for the U.S. Department of Energy under Contract Number DE-AC03-76SF00098.

DISCLAIMER

This document was prepared as an account of work sponsored by the United States Government. While this document is believed to contain correct information, neither the United States Government nor any agency thereof, nor the Regents of the University of California, nor any of their employees, makes any warranty, express or implied, or assumes any legal responsibility for the accuracy, completeness, or usefulness of any information, apparatus, product, or process disclosed, or represents that its use would not infringe privately owned rights. Reference herein to any specific commercial product, process, or service by its trade name, trademark, manufacturer, or otherwise, does not necessarily constitute or imply its endorsement, recommendation, or favoring by the United States Government or any agency thereof, or the Regents of the University of California. The views and opinions of authors expressed herein do not necessarily state or reflect those of the United States Government or any agency thereof or the Regents of the University of California.

LBL-28189

ON THE BEAM IMPEDANCE OF SHALLOW TAPERED CAVITIES

Arne F. Jacob, Glen R. Lambertson, and Ferd Voelker

Lawrence Berkeley Laboratory
1 Cyclotron Road
Berkeley, CA 94720

June 1990

Presented at the European Particle Accelerator Conference, Acropolis, Nice, France,
June 12–16, 1990

This work was supported by the Director, Office of Energy Research, Office of Basic Energy Sciences, Materials Sciences Division of the U.S. Department of Energy, under Contract No. DE-AC03-76SF00098

LSAP-078
LBL-28189

ON THE BEAM IMPEDANCE OF SHALLOW TAPERED CAVITIES

Arne F. Jacob, Glen R. Lambertson, Ferd Voelker

Lawrence Berkeley Laboratory
1 Cyclotron Road
Berkeley, California 94720, USA

Abstract

A local enlargement of a beam tube may support high-Q resonances just below the cutoff frequency of the first TM-mode. We have investigated the longitudinal beam impedance of such cavities that have gradual changes in pipe radius. For convenience, circular cross sections and linear tapers were assumed in the analysis. Several methods with different approximations have been compared. The calculations gave values for the stored energy and the Q-factor which agreed well, while the numbers obtained for Z_B exhibit some variation, but remain very small.

Introduction

To permit elliptically polarized light to emerge from the Advanced Light Source (ALS) a channel with circular cross section will be machined into the vacuum chamber. Where this channel joins tangentially the curved beam tube, the enlarged cross section forms a shallow cavity. Depending on its length, such a chamber may support one or more high-Q resonances just below the cutoff of the beam pipe. The question whether it would present enough impedance to the beam to drive coupled-bunch instabilities prompted us to investigate the problem in more detail.

An experimental approach was not seen as being very practical and cost effective so that a theoretical examination was pursued. Further to reduce the task, a simplified example cavity with rotational symmetry was chosen because it was thought to provide enough insight into the beam impedance issues. Two different procedures were considered. The first to be described uses a semi-numerical technique to give an approximate solution of Maxwell's equations for that problem. In the second method, simple but realistic field distributions were assumed, yielding quasi analytical answers for the transit time effect. Also the result of a digital 2-D calculation will be reported.

Semi-numerical Description

The Method

The dimensions of the cavity model with circular cross sections used in these simulations are shown in Fig.1. The radii have been chosen to match the minimum and maximum TM_{01} cutoff frequencies of the cross section of the actual cavity. For simplicity, the taper has been assumed to be linear, although in principle the method allows for any contour. The 5% increase in radius reduces the TM_{01} cutoff frequency from 4.989 GHz to 4.761 GHz, leaving only a very narrow band for high-Q resonances. The short length further limits their number.

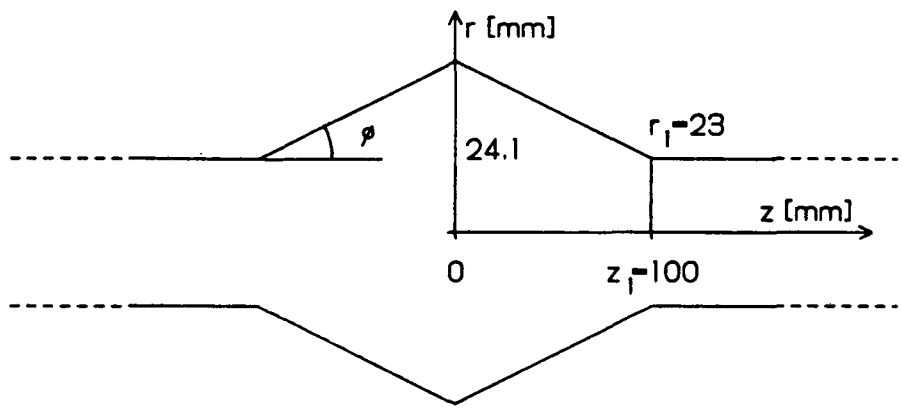

Fig.1: Longitudinal cross section of the tapered cavity.

For each cross section of an axially nonuniform structure the fields can be expressed in terms of the normal modes of the local aperture. Relating the various fields to one another, leads to the so-called generalized transmission line or telegraphist's equations, which for tapered transitions have the form [1]

$$\frac{d}{dz}\begin{bmatrix} V_1 \\ V_2 \\ \cdot \\ \cdot \\ \cdot \\ I_1 \\ I_2 \\ \cdot \\ \cdot \\ \cdot \end{bmatrix} = \begin{bmatrix} C_{11} & C_{12} & \cdots & -\gamma_1 Z_1 & 0 & \cdots \\ C_{21} & C_{22} & & 0 & -\gamma_2 Z_2 & \\ \cdot & & & \cdot & & \\ \cdot & & & \cdot & & \\ \cdot & & & \cdot & & \\ -\gamma_1/Z_1 & 0 & \cdots & -C_{11} & -C_{21} & \cdots \\ 0 & -\gamma_2/Z_2 & & -C_{12} & -C_{22} & \\ \cdot & & & \cdot & & \\ \cdot & & & \cdot & & \\ \cdot & & & \cdot & & \end{bmatrix} \cdot \begin{bmatrix} V_1 \\ V_2 \\ \cdot \\ \cdot \\ \cdot \\ I_1 \\ I_2 \\ \cdot \\ \cdot \\ \cdot \end{bmatrix} \qquad (1)$$

where Z_i represents the characteristic impedance of a waveguide mode, and γ_i its propagation constant along the axial coordinate z. The complex amplitudes, V_i and I_i, of the transverse electric and magnetic field eigenvectors, $\vec{E}_{ti}$ and $\vec{H}_{ti}$, respectively, are defined through

$$\vec{E}_t = \sum_i \vec{E}_{ti} = \sum_i \vec{e}_i V_i, \qquad \vec{H}_t = \sum_i \vec{H}_{ti} = \sum_i \vec{h}_i I_i, \qquad (2)$$

where $\vec{E}_t$ and $\vec{H}_t$ are the total transverse fields, and $\vec{e}_i$ and $\vec{h}_i$ are normalized through the surface integrals

$$\int_S \vec{e}_i^{\,2} dS = \int_S \vec{h}_i^{\,2} dS = 1 .$$

The coupling coefficients in Eq.1 are then given by

$$C_{ik} = \int_S \vec{e}_k \frac{d\vec{e}_i}{dz} dS . \tag{3}$$

At frequency ω the longitudinal field components are obtained from

$$j\omega\varepsilon E_z = \nabla\cdot(\vec{n}_z \times \vec{E}_t), \qquad j\omega\mu H_z = \nabla\cdot(\vec{H}_t \times \vec{n}_z), \tag{4}$$

where ε and μ are the permittivity and permeability of the volume, and $\vec{n}_z$ the unit vector in axial direction. The system of coupled differential equations (1) can now be integrated. For that purpose, however, it has to be reasonably truncated and boundary conditions have to be set. As the taper considered here is very flat, modes of higher order than the fundamental TM_{01} will be excited only very weakly and have therefore been neglected. This in turn greatly simplifies the analysis. Eq.1 then reduces to

$$\frac{d}{dz}\begin{bmatrix} V_1 \\ I_1 \end{bmatrix} = \begin{bmatrix} C_{11} & -\gamma_1 Z_1 \\ -\gamma_1/Z_1 & -C_{11} \end{bmatrix} \cdot \begin{bmatrix} V_1 \\ I_1 \end{bmatrix} . \tag{5}$$

For the circular cross section, the elements of the matrix can be calculated from

$$C_{11} = -\frac{\tan\phi}{r}, \qquad \gamma_1 Z_1 = j\omega\mu + \frac{k_c^2}{j\omega\varepsilon}, \qquad \gamma_1/Z_1 = j\omega\varepsilon , \tag{6}$$

where the local quantities r, tan ϕ, and k_c are the pipe radius, the slope of the cavity wall, and the cutoff wave number, respectively.

The axial symmetry of the structure allows one readily to state the boundary conditions. For large z the fields should decay, exponentially approaching zero amplitude. At $z=0$ the resonance condition imposes either an open or a short circuit looking into the cavity. Thus, either the electric or the magnetic field have to be normal in that plane. If only the TM_{01} mode is taken into account, this condition readily determines the starting values for the integration of Eq.5. From Eqs.2 and 4, they read $V_1=0$ and $I_1=1$ for modes with an even axial symmetry in E_z, and $V_1=1$ and $I_1=0$ in the other case. The value of the nonzero component enters only as a linear scaling constant and therefore has been chosen to be unity. The resonant frequency was set by using the boundary condition at large z. Of course it cannot be determined exactly because of the exponential z-dependence of the fields. Therefore a location z_2 far enough away where the fields are sufficiently small was chosen.

Then the frequency was varied until both the fields and their slopes were reasonably close to zero.

From the knowledge of the field distributions, all the cavity parameters relevant to the beam can be evaluated. Using Eqs.2 and 4, the voltage experienced by the beam, travelling at the velocity of light, is then calculated using

$$V_B = \frac{-2x_{01}}{j\omega\varepsilon\sqrt{\pi}J_1(x_{01})} \int_0^{z_2} \frac{I_1}{r^2} \begin{Bmatrix} \cos k_0 z \\ \sin k_0 z \end{Bmatrix} dz , \tag{7}$$

where cos and sin apply to the short and open circuit cases, respectively, k_0 is the wave number in free space, J_n is the Bessel function of nth order, and x_{01} is the first zero of J_0. Ideally, the integrated voltage is invariant across the aperture [2], and should, in particular, give the same result when evaluated at the beam pipe radius r_1 according to

$$V_B = \frac{-2x_{01}}{j\omega\varepsilon\sqrt{\pi}J_1(x_{01})} \int_0^{z_1} \frac{I_1 J_0(x_{01}\frac{r_1}{r})}{r^2} \begin{Bmatrix} \cos k_0 z \\ \sin k_0 z \end{Bmatrix} dz . \tag{8}$$

The dissipated power P and the stored energy U in the cavity can be expressed in terms of the mode current as

$$P = 4 R_S \int_0^{z_2} \frac{|I_1|^2}{r} dz , \qquad U = 2\mu \int_0^{z_2} |I_1|^2 dz \tag{9}$$

where

$$R_S = \sqrt{\frac{\omega\mu}{2\sigma}}$$

is the wall resistance. The conductivity is denoted by σ. Finally, using Eqs.7, or 8, and 9, the beam impedance at resonance and the quality factor of the cavity can be computed from

$$Z_B = \frac{|V_B|^2}{P} , \qquad Q = \omega \frac{U}{P} . \tag{10}$$

Results

At first Eq.5 was numerically integrated using a Runge-Kutta algorithm. The first resonance was found at 4.866... GHz. The mode has an even axial symmetry in E_z, as illustrated in Fig.2 for one half of the cavity. The frequency setting is critical for the far-end boundary condition to be fulfilled because of the exponential nature of the field's z-dependence below cutoff. For $\sigma = 2 \cdot 10^7$ 1/Ωm, the Q-factor is 14,718; its value is rather insensitive to variations in the numerical parameters such as the number of steps during the integrations, the value of z_2, or, to some extent, the resonant frequency. The opposite is true for the beam impedance, Z_B: its value, which, from Eqs.7 and 10, was found to be on the order of a few 10 Ω, varies by as much as an order of magnitude depending on the settings. Integrating along the beam pipe radius as indicated in Eq.8 approximately doubles the voltage. For completeness, it should be mentioned here that a second mode of the odd type was found at 4.986 GHz, i.e. less than 4 MHz below the beam tube cutoff. Its parameters are of the same order of magnitude as for the even mode. However, with the approximations involved in the calculations, its existence can be questioned.

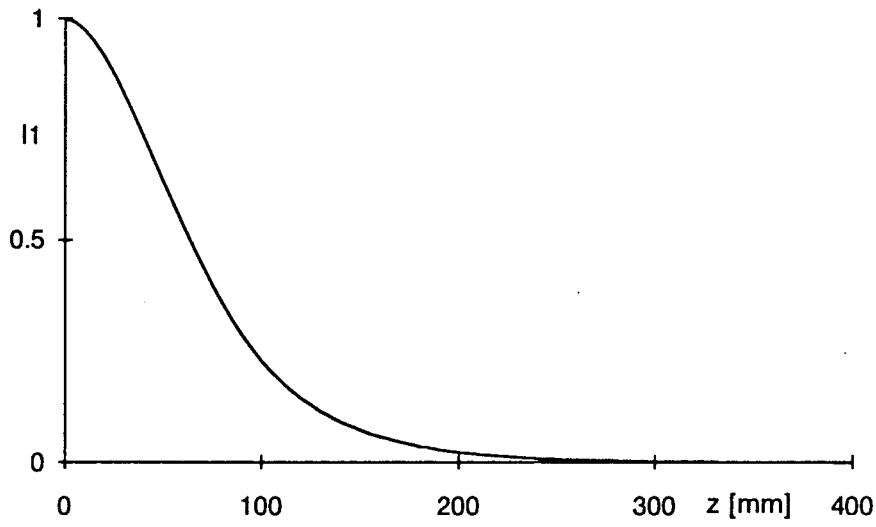

Fig.2: Plot of I_1, the normalized longitudinal electric field.

In an attempt to further simplify the calculations, the coupling factor C_{11} in Eq.5 was set to zero. For the mode current I_1, Eq.5 can then be rewritten as

$$\frac{d^2 I_1}{dz^2} = -(k_0^2 - k_c^2)\, I_1 = -k_z^2\, I_1. \qquad (11)$$

For the even mode the integration then yields a resonant frequency which is about 2 MHz higher than previously, and 2% more stored energy and dissipated power. The Q-factor is identical, and the beam impedance is the same within the variation indicated above. Substituting E_z for I_1 in Eq.11 only introduces a small change because the two quantities are very similar for gradual tapers. This

latter approach has the advantage that no knowledge of the eigenmodes of the various cross-sections is required. The only information needed is the z-dependence of the cutoff frequency, which could be obtained, in more complicated cases, by purely numerical means.

In addition the geometry was evaluated using URMEL-T [3]. All results agree well with the previous data, except for the value of the beam impedance which is on the order of a few kΩ, and depends on the discretization, and thus did not appear to be very reliable.

The uncertainties in all methods arise from the fact that, because of the slowly varying fields, the integral of the fields involves differences of large, but very similar quantities. Small variations in the numerical parameters then have effects which may be bigger than the result itself. It should be mentioned that the simple method outlined above should, in principle, be probed by adding more modes, until a stabilization of the results is achieved. As this, however, requires a different and more elaborate solution, another way, which will be presented next, was chosen.

Analytical Models

Taking the inverse approach, assumptions for the z-dependence of the longitudinal electric field were made. This actually corresponds to a different taper profile than in the previous case. If the shape of the fields is very similar, however, the order of magnitude of the effect is expected to be correct.

At first the voltage experienced by the beam was evaluated with the assumed axial field

$$E_z = E_0 \operatorname{sech}(az)$$

where E_0 and a are scaling constants. Then the voltage becomes

$$|V_B| = 2 E_0 \int_0^\infty \operatorname{sech}(az) \cos(k_0 z)\, dz = E_0 \frac{\pi}{a} \operatorname{sech} \frac{k_0 \pi}{2a}.$$

The constant a was set so that the axial position where the field has zero curvature is approximately the same as in the previous case ($az \cong 0.88$ @ $z \cong 0.045$ m). Assuming the same resonant frequency, the resulting voltage is about $9 \cdot 10^{-5} m \cdot E_0$, which is in close agreement with the former result. If the dissipated power is of comparable magnitude, the beam impedance is about 20 Ω, thus confirming the previous calculations. However, the result exhibits some variation as a function of the uncertainty Δz in determining the point of zero curvature. For large enough values of k_0/a, i.e. for long tapers, the impedance varies by a factor

$$\frac{z}{z+\Delta z} e^{k_0 \pi \Delta z / 1.76},$$

which, for $\Delta z \cong \pm 0.1z$ is about 5 in our case.

Yet another calculation was carried out with the field distribution being approximated by

$$E_z = E_0 \frac{k_c^2}{k_m^2} \frac{1 + C \cos bz}{1 + C} \quad \text{for} \quad |z| \leq z_1 , \tag{12a}$$

and

$$E_z = E_0 \frac{k_\infty^2}{k_m^2} \frac{1 + C \cos bz_1}{1 + C} e^{-(k_\infty^2 - k_0^2)^{1/2} (z - z_1)} \quad \text{for} \quad |z| \geq z_1 , \tag{12b}$$

where k_c is the transverse cutoff wave number, a function of z which varies from k_m at the cavity center to k_∞ in the tube. The constants C and b, and the wave number at resonance k_0 are yet to be determined. Approximating the Hertz vector by its z-component Π for TM waves in cylindrical pipes, the following relations can be written:

$$\Pi = E_z / k_c^2 , \tag{13a}$$

$$E_z = \frac{\delta^2 \Pi}{\delta z^2} + k_0^2 \Pi = k_c^2 \Pi , \tag{13b}$$

$$\vec{E}_t = \vec{\nabla}_t \frac{\delta \Pi}{\delta z} , \tag{13c}$$

where the index t refers to transverse quantities. With the matching conditions at $z = z_1$ one obtains from Eqs.13 for the fields of Eq.12

$$b \cot bz_1 = -\sqrt{k_\infty^2 - k_0^2} , \tag{14}$$

and

$$C = -\cos bz_1 . \tag{15}$$

Evaluating Eq.13b at $z = 0$ finally yields

$$k_0^2 - k_m^2 = \frac{-1}{\Pi} \frac{\delta^2 \Pi}{\delta z^2} \bigg|_{z=0} = \frac{C b^2}{1 + C} . \tag{16}$$

With

$$V_B = \int_{-\infty}^{\infty} E_z \, e^{jk_0 z} \, dz = 2 \int_{0}^{\infty} E_z \cos k_0 z \, dz \ ,$$

the voltage experienced by the beam can now be evaluated from the longitudinal field in Eq.12. Using Eqs.14, 15, 16, and, from Eq.13b, the formula

$$k_c^2 = \frac{k_0^2 + C\,(k_0^2 - b^2) \cos bz}{1 + C \cos bz} \ ,$$

the integration yields the surprising result $V_B = 0$. This special field shape confirms that the beam impedance may be very small. The calculation yielded a shallow cavity of the shape depicted with suppressed zero in Fig.3. The parameters z_1, k_m, and k_∞ were the same as in the previous cases.

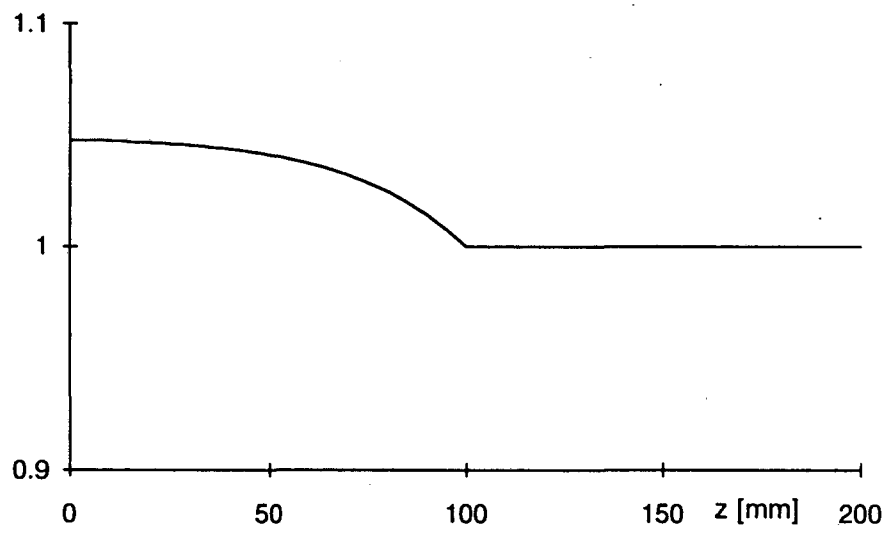

Fig.3: Ratio of cavity radius to beam pipe radius.

Conclusions

The beam impedance of very shallow tapered cavities has been studied, using several different approaches. Both semi-numerical methods and analytical models indicate that, because of the transit time effect, the beam is weakly coupled to such cavities. Although some approximations are involved in the model and in the calculations, we conclude that this feature in the ALS will be harmless.

Acknowledgements

The authors would like to thank Dr. Robert A. Rimmer for performing the URMEL-T calculations.

References

[1] F. Sporleder, H.-G. Unger: Waveguide Tapers, Transitions, and Couplers, London: P. Peregrinus Ltd, 1979.

[2] G. R. Lambertson: Electromagnetic Detectors, Presented at the Joint US-CERN School on Particle Accelerators, Isola di Capri, October 20-26,1988.

[3] T. Weiland: IEEE Trans. NIM, vol. NIM-216, 1983, pp.329-348.

This work was supported by the Director, Office of Energy Research, Office of Basic Energy Sciences, Materials Sciences Division, of the U.S. Department of Energy, under Contract No. DE-AC03-76SF00098.

LAWRENCE BERKELEY LABORATORY
UNIVERSITY OF CALIFORNIA
INFORMATION RESOURCES DEPARTMENT
BERKELEY, CALIFORNIA 94720