For Reference

Not to be taken from this room

LBL-28245

Copy 1
Bldg. 50 Library.

LBL-28245
UCB-PTH-89/35

Unitary Irrational Central Charge on Compact g I. (Simply-Laced $g_x)^{q\geq 2}_{\#}$ *

M.B. Halpern and N.A. Obers

Department of Physics, University of California
and
Theoretical Physics Group, Physics Division
Lawrence Berkeley Laboratory
1 Cyclotron Road, Berkeley, California 94720

Abstract

Following the recent construction of unitary irrational central charge on compact affine g, we begin a series of papers to report further solutions of the Virasoro master equation and related topics in irrational conformal field theory. This paper completes the maximal-symmetric subansatz by obtaining the three-parameter unitary irrational construction (simply-laced $g_x)^{q\geq 2}_{\#}$, which contains the known solution $(SU(2)_x)^{q\geq 3}_{\#}$ and involves a root of a root generically.

*This work was supported in part by the Director, Office of Energy Research, Office of High Energy and Nuclear Physics, Division of High Energy Physics of the U.S. Department of Energy under Contract DE-AC03-76SF00098 and in part by the National Science Foundation under grant PHY85-15857.

1 Introduction

Affine Lie algebra was discovered independently in mathematics [1] and physics [2]. The first representations [2] were constructed with world-sheet fermions [2,3] to implement the proposal of current-algebraic spin and internal symmetry on the string [2]. Examples of affine-Sugawara constructions [2,4] and coset constructions [2,4] were also given in the first string era, as well as the vertex operator construction of fermions and $SU(n)_1$ from compactified spatial dimensions [5,6]. The generalization of these constructions [7,8,9] and their applications to the heterotic string [10] mark the beginning of the present era. See [11,12,13,14] for further historical remarks on affine-Virasoro constructions.

The original approach of Bardakci and Halpern [2,4] was recently resurrected in the general affine-Virasoro construction [15,16,17]

$$L = L^{ab} \,{:}J_a J_b{:} \tag{1.1}$$

on the currents J_a of affine g [1,2]. The resulting Virasoro master equation for the inverse inertia tensor $L^{ab} = L^{ba}$ (and the generalization to include linear terms in J_a [15,16]) contains the familiar constructions

1. The affine-Sugawara nests [18]. These include the affine-Sugawara constructions [2,4,8], the coset constructions [2,4,8], the non-compact unitary coset constructions [19] and the nested coset constructions [20].

2. The linear conformal deformations [11,21]. These constructions unify and contain a) the c-fixed deformations, which generalize continuous toroidal [2,22,13,23,24] and orbifold compactifications [25,26], and b) the c-changing deformations, which generalize the Fairlie-Feigin-Fuchs construction [27].

and a very large number of new constructions [18], which may include all possible Virasoro constructions.

In particular, broad classes of solutions with unitary irrational central charge on compact g have recently been announced [18], and there is every indication that these solutions are only the first glimpse into a unitary irrational affine-Virasoro universe of immense new structure. Geometric identification of the

master equation as an Einstein-like system on the group manifold G [16] is another indication that classification of all solutions will be a formidable program.

The master equation has so far yielded the following new solutions

1. The generalized spin-orbit constructions [15] on non-semi-simple groups $g \times U(1)^{\dim g/h}$, where g/h is a symmetric space, which may be called

$$(g \times U(1)^{\dim g/h})_{\#}. \tag{1.2}$$

   These constructions are intrinsically non-compact (or non-unitary) with generically irrational central charge, although it may be possible to construct unitary subspaces: recall that the original spin-orbit construction on $SO(D-1,2)_x \supset SO(D-1,1)_x$ [2] contains the unitary sector of the NS model [28] when $D = 10$ and $x = 1$ [29].

2. Unitary quadratic deformations with rational central charge and continuous conformal weights [17,18]

$$\text{Cartan(simple } g)^{\#};\ \ SU(2)^{\#}_4;\ \ (SU(2)_x \times SU(2)_x)^{\#},\ x \neq 4 \tag{1.3}$$

   which are presumably new constructions of known deformations [18,30].

3. Constructions with unitary irrational central charge on compact g [18]

$$(SU(2)_x)^{q\geq 3}_{\#};\ \ \text{simply-laced}\, g^{\#}_x = (\text{simply-laced}\, g_x)^{q=1}_{\#} \tag{1.4}$$

   which are conceptually new. These chiral constructions, and the presumably related unitary irrational $N = 2$ constructions of [19], should be considered for promotion to unitary irrational conformal field theory.

The central charges of the irrational constructions (1.2) and (1.4) involve no more than a single square root, a behavior we call type-one irrational. As in general relativity, all the new solutions have been obtained by the method of consistent ansätze, and, in particular, the unitary type-one solutions given in (1.4) were found in the maximal-symmetric subansatz within the basic ansatz for simply-laced g [18]. Only Cartan(simple g) and the group $SU(2)$ have been completely solved.

We begin here a series of papers to report further unitary irrational solutions of the Virasoro master equation and related topics in irrational conformal field theory. This paper announces the completion of the maximal-symmetric subansatz by the construction

$$(\text{simply-laced}\, g_x)^{q\geq 2}_{\#} \tag{1.5}$$

which is generically unitary and irrational on the three-dimensional integer domain

$$(\tilde{h} \geq 2,\ x \geq 2,\ q \geq 2) \tag{1.6}$$

where $\tilde{h}$ is the dual Coxeter number of g. We refer below to the domain (1.6) as the first quadrant. The new construction involves a root of a root generically across the first quadrant, which we call type-two irrational behavior.

An embedding phenomenon is observed in $(\text{simply-laced}\, g_x)^{q\geq 2}_{\#}$, such that old and new type-one unitary irrational solutions live in two-dimensional subspaces of the construction. For example, the type-one unitary subconstructions

$$\begin{array}{lcl} \tilde{h} = 2 & : & (SU(2)_x)^{q\geq 3}_{\#} \\ x = 2 & : & (\text{simply-laced}\, g_2)^{q\geq 2}_{\#} \\ q = 2 & : & (\text{simply-laced}\, g_x)^{2}_{\#} \end{array} \tag{1.7}$$

live on boundaries of the type-two construction, while the two-dimensional type-one unitary subconstructions

$$(\text{simply-laced} g_{\tilde{h}+2})^{q\geq 2}_{\#};\ \ (\text{simply-laced} g_{\frac{\tilde{h}}{2}+1})^{q\geq 2}_{\#} \tag{1.8}$$

are located in the interior of the type-two construction. Similarly, the type-zero (rational) subspaces of the type-two construction tend to occur on one-dimensional subspaces which are intersections of type-one subspaces.

The construction $(\text{simply-laced}\, g_x)^{q\geq 2}_{\#}$ completes the maximal-symmetric subansatz, which is limited to simply-laced g. It is natural to consider the collection of all unitary irrational constructions in the maximal-symmetric subansatz

$$((\text{simply-laced}\, g_x)^{q})^{\#}_{M} \equiv \text{simply-laced}\, g^{\#}_x \cup (\text{simply-laced}\, g_x)^{q\geq 2}_{\#} \tag{1.9}$$

which we call the maximal-symmetric construction. From this point of view, simply-laced $g^{\#}_x$ is only another two-dimensional type-one subspace of the more

DISCLAIMER

This document was prepared as an account of work sponsored by the United States Government. While this document is believed to contain correct information, neither the United States Government nor any agency thereof, nor the Regents of the University of California, nor any of their employees, makes any warranty, express or implied, or assumes any legal responsibility for the accuracy, completeness, or usefulness of any information, apparatus, product, or process disclosed, or represents that its use would not infringe privately owned rights. Reference herein to any specific commercial product, process, or service by its trade name, trademark, manufacturer, or otherwise, does not necessarily constitute or imply its endorsement, recommendation, or favoring by the United States Government or any agency thereof, or the Regents of the University of California. The views and opinions of authors expressed herein do not necessarily state or reflect those of the United States Government or any agency thereof or the Regents of the University of California.

general construction (1.9), which contains all presently known unitary irrational solutions.

In the second paper of this series, we study high-k expansions and new unitary irrational constructions on $SU(3)$, beyond the maximal-symmetric subansatz. In particular, we will fully solve the Dynkin-symmetric subansatz [18] in this case and find all but one of the physically distinct new unitary solutions in the basic ansatz. Through high-k analysis and explicit construction of all levels of two of its unitary (Dynkin-symmetric)points, the last solution is identified as a (presumably unitary) c-changing deformation, that is, a construction with continuous central charge on compact g.

2 The Virasoro Master Equation

The general affine-Virasoro construction is [15,17]

$$L = L^{ab} \,{:}\, J_a J_b \,{:} \tag{2.1a}$$

$$[J_a^{(m)}, J_b^{(n)}] = i f_{ab}{}^c J_c^{(m+n)} + m G_{ab} \delta_{m+n,0} \tag{2.1b}$$

$$[L^{(m)}, L^{(n)}] = (m-n) L^{(m+n)} + \frac{c}{12} m(m^2-1)\delta_{m+n,0} \tag{2.1c}$$

with symmetric normal ordering $T_{ab} = \,{:}\, J_a J_b \,{:} = T_{ba}$ on the currents J_a of affine g [1,2], and G_{ab} is a general Killing metric on G. Analysis of the system (2.1) results in the Virasoro master equation [15,17]

$$L^{ab} = 2L^{ac} G_{cd} L^{db} - L^{cd} L^{ef} f_{ce}{}^a f_{df}{}^b - L^{cd} f_{ce}{}^f f_{df}{}^{(a} L^{b)e} \tag{2.2a}$$

$$c = 2 G_{ab} L^{ab} \tag{2.2b}$$

for the inverse inertia tensor $L^{ab} = L^{ba}$ on G. The construction is completely general since g is not necessarily semi-simple or compact. In particular, to obtain level $x_I = 2k_I/\psi_I^2$ of g_I in $g = \oplus_I g_I$ with dual Coxeter number $\tilde{h}_I = Q_I/\psi_I^2$, take

$$G_{ab} = \oplus_I k_I \eta^I_{ab}, \quad f_{ac}{}^d f_{bd}{}^c = -\oplus_I Q_I \eta^I_{ab} \tag{2.3}$$

where η^I_{ab} and ψ_I are respectively the Killing metric and the highest root of g_I. The master equation is identified in [16] as an Einstein-like system for the left-invariant metric $g_{mn} = e^a_m L_{ab} e^b_n$ on the group manifold G.

We remark on some general properties of the master equation which will be useful in the analysis below, referring to [15,18] for further discussion.

1. Counting. A very large number of solutions of the master equation [18]

$$N(g) = 2^{n(g)}, \quad n(g) = \dim g(\dim g - 1)/2 \tag{2.4}$$

is expected generically on each manifold G, where $n(g)$ is the number of coupled quadratic equations remaining in the system after gauge fixing the inner automorphisms of g. Most of these solutions will be new, since e.g. $N(g)$ is approximately 1/4 billion for $g = SU(3)$.

The number of physically distinct solutions is generally less than $N(g)$ due to non-generic behavior of the coefficients. We mention in particular the residual discrete automorphisms $J'_a = \Omega_a{}^b J_b$, $\Omega \in SO(\dim g)$ in the adjoint,

$$\Omega_a{}^c G_{cd} \Omega_b{}^d = G_{ab}, \quad \Omega_a{}^e \Omega_b{}^f \Omega_g{}^c f_{ef}{}^g = f_{ab}{}^c \tag{2.5a}$$

$$(L')^{ab} \equiv L^{cd} \Omega_c{}^a \Omega_d{}^b \tag{2.5b}$$

under which the master equation is automatically covariant, so that L' in (2.5b) is a solution, given a solution L. The conformal weights $\Delta = L^{ab} T_a T_b$ [12,18] and central charge c in (2.2b) are invariant under all automorphisms, so L' is physically equivalent to L. Other (accidental) degeneracy may include continuous solutions (degenerate quadratic equations) and degenerate solutions.

2. K-conjugation covariance. Solutions to the master equation occur universally in K-conjugate pairs [2,4,9,15,17]

$$L + \tilde{L} = L_g, \quad c + \tilde{c} = c_g \tag{2.6a}$$

$$L_g^{ab} = \oplus_I \frac{\eta_I^{ab}}{2k_I + Q_I}, \quad c_g = \sum_I \frac{x_I \dim g_I}{x_I + \tilde{h}_I} \tag{2.6b}$$

where L_g is the affine-Sugawara construction on g. K-conjugation covariance $\tilde{L} = L_g - L$ of the master equation generates the affine-Virasoro nests [18] in the vertical direction (subgroup nesting) and provides a useful analytic tool in the horizontal direction (fixed g), guaranteeing, for example,

a closed-form solution for subsystems of up to three coupled quadratic equations [18].

3. Unitarity. Unitary solutions on positive integer level of affine compact g are recognized when L^{ab} = real in the Cartesian frame with $J_a^{(m)\dagger} = J_a^{(-m)}$ [9,18].

4. Cartan $g^{\#}$ and high-level affine g. The two simple cases
a) Cartan g: $L^{AB} \neq 0$, $A,B = 1,\ldots,\mathrm{rank}\, g$
b) high-level affine g: $L^{ab} = \mathcal{O}(k_I^{-1}, \forall I)$, $a,b = 1,\ldots,\dim g$
are conceptually related since affine g is effectively abelian at high level. The master equation and its general solution in both cases may be written in the unified matrix form

$$L = 2LGL: \qquad L = \frac{1}{2\sqrt{G}}\,\Omega\,\theta\,\Omega^T\frac{1}{\sqrt{G}}, \quad c = \mathrm{Tr}\,\theta \tag{2.7}$$

with orthogonal Ω and diagonal θ, $\theta(\mathbf{1}-\theta) = 0$ for all compact g, not necessarily semi-simple, which generalizes known results [18] for simple compact g. The solution in the first case is the quadratic deformation Cartan $g^{\#}$, which requires the Killing metric G_{AB} on Cartan g, $\Omega^{AB} \in SO(\mathrm{rank}\, g)$ in the adjoint and $\theta_A = 0,1$. For the solution at high level, take the full Killing metric G_{ab}, $\Omega^{ab} \in SO(\dim g)$ in the adjoint and $\theta_a = 0,1$. As a result, the central charge takes integer values from zero to rank g or dim g respectively in the two cases.

3 Ansätze for (Simply-laced g)^q

3.1 The basic ansatz

As in general relativity, it is the function of ansätze to exploit the symmetries of the system, thereby reducing the number of coupled equations and solutions: The basic ansatz and the maximal-symmetric and Dynkin-symmetric subansätze for simply-laced g and $SU(2)^q$ were studied in [18].

We discuss here the generalization of the basic ansatz and the maximal-symmetric subansatz to the compact semi-simple groups

$$(\text{simply-laced } g)^q \equiv \text{simply-laced } (g_1)_{x_1} \times \ldots \times \text{simply-laced } (g_q)_{x_q} \tag{3.1.1}$$

with $g_I = g$, $\forall I$ so that $\dim g_I = \dim g = (\tilde{h}+1)\mathrm{rank}\, g$ and $x_I = 2k_I/\rho^2$ for $I = 1,..,q$. The ansätze are simplest in the Cartan-Weyl basis, for which

$$G_{ab} = \oplus_{I=1}^q k_I \eta_{ab}^{(I)}, \quad \eta_{AB}^{(I)} = \delta_{AB}^{(I)}, \quad \eta_{\alpha\beta}^{(I)} = \delta_{\alpha+\beta,0}^{(I)} \tag{3.1.2a}$$

$$f_{A\,\alpha}^{(I)\ \alpha} = f_{\alpha\,-\alpha}^{(I)\ A} = -i\alpha^A{}_{(I)}; \quad f_{\alpha\beta}^{(I)\ \gamma} = -iN_\gamma^{(I)}(\alpha,\beta),\ \gamma = \alpha+\beta \tag{3.1.2b}$$

$$N_\gamma^{(I)}(\alpha,\beta) = N_{-\beta}^{(I)}(-\gamma,\alpha) = -N_{-\gamma}^{(I)}(-\alpha,-\beta) \tag{3.1.2c}$$

$$\sum_\alpha \alpha^A{}_{(I)}\alpha^B{}_{(I)} = \tilde{h}\rho^2\delta_{(I)}^{AB}, \quad \sum_{\alpha+\beta=\gamma} 1 = 2(\tilde{h}-2), \quad (N_\gamma^{(I)}(\alpha,\beta))^2 = \rho^2/2 \tag{3.1.2d}$$

where $\delta_{AB}^{(I)} \equiv \delta_{A(I)B(I)}$, $\delta_{\alpha+\beta,0}^{(I)} \equiv \delta_{\alpha(I)+\beta(I),0}$ and so on, with $A(I),B(I) = 1,..,\mathrm{rank}\, g$ and $\alpha(I),\beta(I),\gamma(I),\rho(I)$ the roots of any g_I, $I = 1,..,q$. We also need the operators and coefficients

$$T_{AB}^{IJ} \equiv T_{A(I)B(J)}, \quad T_{\alpha\beta}^{IJ} \equiv T_{\alpha(I)\beta(J)}; \quad L_{IJ}^{AB} \equiv L^{A(I)B(J)}, \quad L_{IJ}^{\alpha\beta} \equiv L^{\alpha(I)\beta(J)} \tag{3.1.3}$$

in the corresponding (g_I, g_J) block notation of [15].

Following [18], we define the basic ansatz for (simply-laced g)^q as

$$L_{IJ}^{AB} \neq 0, \quad L_{II}^{\rho,\pm\rho} \neq 0 \tag{3.1.4}$$

which keeps only the diagonal root components for all $\{\rho(I)\}$ in each g_I, while the general Cartan components L_{IJ}^{AB} provide a linkage among all $\{g_I\}$. The form of the Virasoro operator in the basic ansatz is

$$L = \sum_{I,J=1}^q \sum_{AB} L_{IJ}^{AB} T_{AB}^{IJ} + \sum_{I=1}^q \sum_{\rho>0} (2L_{II}^{\rho,-\rho} T_{\rho,-\rho}^{II} + L_{II}^{\rho\rho} T_{\rho\rho}^{II} + (L_{II}^{\rho\rho})^* T_{-\rho,-\rho}^{II}) \tag{3.1.5a}$$

$$c = 2\sum_{I=1}^{q} k_I \Big(\sum_A L_{II}^{AA} + 2\sum_{\rho>0} L_{II}^{\rho,-\rho}\Big) \tag{3.1.5b}$$

and unitarity requires L_{IJ}^{AB}, $L_{II}^{\rho,-\rho}$ = real. The corresponding reduced form of the master equation

$$L_{IJ}^{AB} = 2\sum_{M=1}^{q} k_M \sum_C L_{IM}^{AC} L_{MJ}^{CB} + \delta_{I,J}\sum_\rho (|L_{II}^{\rho\rho}|^2 - (L_{II}^{\rho,-\rho})^2)\rho^A(I)\rho^B(I) +$$

$$+\sum_{\rho C}\Big(L_{II}^{\rho,-\rho} L_{IJ}^{CB}\rho^C(I)\rho^A(I) + L_{JJ}^{\rho,-\rho} L_{JI}^{CA}\rho^C(J)\rho^B(J)\Big) \tag{3.1.6a}$$

$$L_{II}^{\rho\rho}\left[1 - 4k_I L_{II}^{\rho,-\rho} - 4\sum_{AB} L_{II}^{AB}\rho^A(I)\rho^B(I) - \rho^2\sum_{\alpha+\beta=\rho} L_{II}^{\beta,-\beta}\right] = \frac{\rho^2}{2}\sum_{\alpha+\beta=\rho} L_{II}^{\alpha\alpha} L_{II}^{\beta\beta} \tag{3.1.6b}$$

$$L_{II}^{\rho,-\rho} = 2(k_I - \rho^2)|L_{II}^{\rho\rho}|^2 + 2(k_I + \rho^2)(L_{II}^{\rho,-\rho})^2 + \frac{\rho^2}{2}\sum_{\alpha+\beta=\rho}(2L_{II}^{\rho,-\rho} - L_{II}^{\beta,-\beta})L_{II}^{\alpha,-\alpha} \tag{3.1.6c}$$

shows manifest consistency of the basic ansatz.

The full master equation (2.2a) and the basic ansatz (3.1.6) show

$$n(g^q) = q\dim g(q\dim g - 1)/2 \tag{3.1.7a}$$

$$n_B(g^q) = q(\dim\Phi(g) + \operatorname{rank} g\,(q\operatorname{rank} g + 1)/2) \tag{3.1.7b}$$

coupled quadratic equations respectively on an equal number of unknowns. Although the reduced system (3.1.6) is generally much smaller than the full master equation, the basic ansatz is presently unmanageable without further subansätze. An exception is the solution Cartan(simply-laced g^q)# contained in (2.7).

3.2 The maximal-symmetric subansatz

The equal-level product group

$$(\text{simply-laced } g_x)^q \equiv \text{simply-laced } (g_1)_x \times \ldots \times \text{simply-laced } (g_q)_x \tag{3.2.1}$$

shows subgroup symmetry with $k_I = k = x\rho^2/2$, $I = 1,\ldots,q$. Following the intuition of Ref.[18] for simply-laced g and $(SU(2)^q$, we have found the general maximal-symmetric subansatz on (simply-laced $g_x)^q$

$$L_{II}^{AB} = \frac{\ell_d}{\rho^4\tilde{h}}\sum_\rho \rho^A(I)\rho^B(I) = \ell_d\rho^{-2}\delta_{(I)}^{AB},\ \forall I \tag{3.2.2a}$$

$$L_{IJ}^{AB} = \ell\rho^{-2}(-1)^{\theta(I)+\theta(J)}\delta^{A(I),B(J)},\ I \neq J, \tag{3.2.2b}$$

$$L_{II}^{\rho,\pm\rho} = \rho^{-2}L_\pm \text{ real},\ \forall\rho(I),\ \forall I \tag{3.2.2c}$$

where $\theta(I) = 0$ or 1, $I = 1,..,q$, and $\ell = 0$ for $q = 1$. The maximal symmetry of the subansatz under exchange of any two roots of (simply-laced $g_x)^q$ is apparent in the form (3.2.2). For clarity, we also give the Cartan sector of the subansatz in ordinary matrix notation

$$\rho^2 L^{AB} = \begin{pmatrix} \ell_d\mathbf{I} & \ell^{12}\mathbf{I} & .. & \ell^{1q}\mathbf{I} \\ \ell^{12}\mathbf{I} & \ell_d\mathbf{I} & .. & \ell^{2q}\mathbf{I} \\ .. & .. & .. & .. \\ \ell^{1q}\mathbf{I} & \ell^{2q}\mathbf{I} & .. & \ell_d\mathbf{I} \end{pmatrix},\quad \ell^{IJ} \equiv (-1)^{\theta(I)+\theta(J)}\ell \tag{3.2.3}$$

where $\mathbf{I}$ is a rank g unit matrix, so that the diagonal entries ℓ_d couple Cartan g_I to itself, while the off-diagonal entries ℓ^{IJ} couple Cartan g_I to Cartan $g_{J\neq I}$.

The basic ansatz (3.1.6) degenerates in the maximal-symmetric subansatz to the four coupled quadratic equations

$$\ell_d(1 - x\ell_d - 2\tilde{h}L_-) = \tilde{h}(L_+^2 - L_-^2) + x(q-1)\ell^2 \tag{3.2.4a}$$

$$\ell(1 - 2x\ell_d - x(q-2)\ell - 2\tilde{h}L_-) = 0 \tag{3.2.4b}$$

$$L_+(1 - 2(x + \tilde{h} - 2)L_- - 4\ell_d - (\tilde{h} - 2)L_+) = 0 \tag{3.2.4c}$$

$$L_- = (x-2)L_+^2 + (x + \tilde{h})L_-^2 \tag{3.2.4d}$$

$$c = qx\operatorname{rank} g(\ell_d + \tilde{h}L_-) \tag{3.2.4e}$$

for the four unknowns ℓ_d, ℓ and $L_\pm$. The phase choices in (3.2.2b) give 2^{q-1} solutions for each of the 16 solutions $(\ell_d, \ell, L_\pm)$ of (3.2.4), but these phase choices are physically equivalent copies of the basic representative $\theta(I) = 0$, $\forall I$, under the involutive automorphisms * $J' = \Omega J$

$$J'_{A(I)} = (-1)^{\theta(I)} J_{A(I)}, \quad E'_{\rho(I)} = (-1)^{\theta(I)} E_{(-1)^{\theta(I)}\rho(I)} \tag{3.2.5a}$$

$$L' = L(\{\theta(I)\}) = \Omega^T(\{\theta(I)\}) L(\{\theta\} = 0) \Omega(\{\theta(I)\}) \tag{3.2.5b}$$

so only the basic representative need be considered. The Virasoro operator of the maximal-symmetric subansatz

$$\rho^2 L = \sum_{I=1}^{q} \left(\ell_d \sum_A T^{II}_{AA} + \sum_{\rho>0} (2L_- T^{II}_{\rho,-\rho} + L_+ (T^{II}_{\rho\rho} + T^{II}_{-\rho,-\rho})) \right) + 2\ell \sum_{I>J}^{q} \sum_A T^{IJ}_{AA} \tag{3.2.6}$$

is obtained from (3.1.5a) and (3.2.2) in this case.

Equations (3.2.4b-c) of the subansatz exhibit a two-fold *factorization*, which simplifies the system (3.2.4) by splitting it into 4 sectors

$$\begin{aligned} &1)\ L_+ = \ell = 0 \\ &2)\ L_+ = 0,\ \ell \neq 0 \quad (q \geq 2) \\ &3)\ L_+ \neq 0,\ \ell = 0 \\ &4)\ L_+ \neq 0,\ \ell \neq 0 \quad (q \geq 2) \end{aligned} \tag{3.2.7}$$

each of which contains two coupled quadratic equations and hence four solutions generically. The first three sectors contain known solutions † : sector 1 contains the Sugawara construction L(simply-laced g^q_x) and its K-conjugate $L = 0$, as well as Cartan(simply-laced g^q) and its K-conjugate on simply-laced g^q_x; sector 2 contains points in Cartan(simply-laced $g^q)^\#$ [18] and its K-conjugate on simply-laced g^q_x, while sector 3 contains outer products of simply-laced $g^\#_x$ [18]

$$(\text{simply-laced } g^\#_x)^q \equiv \text{simply-laced } (g_1)^\#_x \times \ldots \times \text{simply-laced } (g_q)^\#_x \tag{3.2.8}$$

*The 2^{2q-1} copies found for $(SU(2))^q_\#$ in [18] are generated by the automorphisms in (3.2.5) and the additional $SU(2)$ automorphisms $J'_{3(I)} = J_{3(I)}$, $E'_{\pm\alpha(I)} = (\pm i)^{\theta(I)} E_{\pm\alpha(I)}$ with $\theta(I) = 0, 1$ for $I = 1, \ldots, q$.

†The case $\ell = 0$ in (3.2.4), which includes sectors 1 and 3, is eq.(8.3) of Ref.[18] with $\tilde{h}\lambda$(Ref.[18]) $= \ell_d$(here).

and products of the rational partners of simply-laced $g^\#_x$.

The search for new solutions focuses on the first quadrant ‡ of sector 4 with $L_+, \ell \neq 0$

$$\ell_d(1 - x\ell_d - 2\tilde{h}L_-) = \tilde{h}(L_+^2 - L_-^2) + x(q-1)\ell^2 \tag{3.2.9a}$$

$$1 - 2x\ell_d - x(q-2)\ell - 2\tilde{h}L_- = 0 \tag{3.2.9b}$$

$$1 - 2(x + \tilde{h} - 2)L_- - 4\ell_d - (\tilde{h} - 2)L_+ = 0 \tag{3.2.9c}$$

$$L_- = (x-2)L_+^2 + (x + \tilde{h})L_-^2 \tag{3.2.9d}$$

which is equivalent to a quartic equation. A single quartic can always be rearranged by K-conjugation into an effective quadratic equation [18], so the solutions of the system (3.2.9) will be no worse than type-two irrational, involving a root of a root.

‡The simply-laced g_1 identities of [5,31,13,18] imply that all level one solutions in the maximal-symmetric subansatz are equivalent to constructions in Cartan(simply-laced $g^q_{x=1})^\#$, so we restrict further explicit discussion to the first quadrant with $\tilde{h} \geq 2$, $x \geq 2$, $q \geq 2$.

4 (Simply-laced g_x)$_{\#}^{q\geq 2}$

The four solutions of (3.2.9) form the construction we call (simply-laced g_x)$_{\#}^{q\geq 2}$,

$$\ell_d = \frac{1}{2(\tilde{h}+x)}[1+\frac{\eta}{2}((\tilde{h}-2)(\tilde{h}+x)U_1^{(\epsilon)} - (x+\tilde{h}-2)U_2^{(\epsilon)})] \tag{4.1a}$$

$$\ell = \frac{\eta}{2x(q-2)}[-x(\tilde{h}-2)U_1^{(\epsilon)} + (x-2)U_2^{(\epsilon)}] \tag{4.1b}$$

$$L_- = \frac{1}{2(\tilde{h}+x)}[1+\eta U_2^{(\epsilon)}], \quad L_+ = -\eta U_1^{(\epsilon)} \tag{4.1c}$$

$$c = \frac{qx\,\mathrm{rank}\,g}{2(\tilde{h}+x)}[\tilde{h}+1+\frac{\eta}{2}((\tilde{h}-2)(\tilde{h}+x)U_1^{(\epsilon)} + (\tilde{h}-x+2)U_2^{(\epsilon)})] \tag{4.1d}$$

where we have defined the auxiliary quantities

$$U_1^{(\epsilon)} \equiv (qx-4)(q(x-4)+4)[V-4\epsilon q^2 x(x-2)(\tilde{h}-2)(q-2)\sqrt{W}]^{-1/2} \tag{4.2a}$$

$$U_2^{(\epsilon)} \equiv (xq^2(\tilde{h}-2)(x-2)-2\epsilon(q-2)\sqrt{W})[V-4\epsilon q^2 x(x-2)(\tilde{h}-2)(q-2)\sqrt{W}]^{-1/2} \tag{4.2b}$$

$$V \equiv x^2q^4[\tilde{h}^2(x^2-4x+8)+4\tilde{h}(x^3-11x^2+32x-24)+4(x^4-10x^3+37x^2-60x+40)]+$$
$$+16(q-1)[xq^2(4x^3+12x^2(\tilde{h}-2)-x(\tilde{h}^2+60\tilde{h}-44)+16(3\tilde{h}-2))+128\tilde{h}(q-1)(x-1)] \tag{4.2c}$$

$$W \equiv x[xq^2(\tilde{h}-2x+6)^2+64(x-\tilde{h}-2)(q-1)] \tag{4.2d}$$

and the four solutions are distinguished by $\epsilon = \pm 1, \eta = \pm 1$. The quantities $U_i^{(\epsilon)}$ and the irrational central charge in (4.1d) clearly involve a root of a root, so the solutions are generically type-two as anticipated in Section 3. It is clear on inspection that $\eta = \pm 1$ labels K-conjugate partners at fixed ϵ

$$L_\epsilon(\eta=1) + L_\epsilon(\eta=-1) = L(\text{simply-laced } g_x^q) \tag{4.3}$$

while $\epsilon = \pm 1$ labels distinct K-conjugate pairs.

The construction (simply-laced g_x)$_{\#}^{q\geq 2}$ is generically unitary, although some work is necessary to determine the non-unitary exceptions. The unitary domain of the construction is defined by the single condition

$$W \geq 0 \tag{4.4}$$

for integer $\tilde{h} \geq 2$, $x \geq 2$, $q \geq 2$ in the first quadrant, since we have verified numerically that $V \geq 4q^2x(x-2)(\tilde{h}-2)(q-2)\sqrt{W}$ when $W \geq 0$ in the first quadrant. Analysis of the condition (4.4) shows that the construction is unitary in the first quadrant except for the interior of a thin non-unitary wedge, shown in Fig.1, whose (unitary) boundary is $W = 0$ and which is centered on the plane $x = \frac{\tilde{h}}{2}+3$, $\tilde{h} \neq 2$. Further characteristics of the non-unitary wedge are as follows:

1. The wedge does not enter level two, so (simply-laced g_2)$_{\#}^{q\geq 2}$ is completely unitary.

2. The wedge narrows smoothly with increasing q until, beyond a critical value of q, only a single layer of non-unitary solutions are found on the central plane $x = \frac{\tilde{h}}{2}+3$, $\tilde{h} \neq 2$.

3. More precisely, we determine from (4.4) the width of the wedge in the x-direction at large q

$$\Delta x = \frac{8}{\sqrt{q}}\sqrt{\frac{\tilde{h}-2}{\tilde{h}+6}} + \mathcal{O}(q^{-1}), \quad q \gg 1 \tag{4.5}$$

which shows that no more than one level is non-unitary for any g when $q \geq 64$. Similarly, the width in $\tilde{h}$ at large q,

$$\Delta\tilde{h} = \frac{16}{\sqrt{q}}\sqrt{\frac{x-4}{x}} + \mathcal{O}(q^{-1}), \quad q \gg 1 \tag{4.6}$$

shows that the wedge has narrowed precisely to the central plane when $q \geq 256$, as shown in Fig.1.

4. The wedge is broadest at its base ($q = 2$) and also broadens slightly with increasing $x, \tilde{h}$ to a finite width

$$\Delta x = 8\frac{\sqrt{q-1}}{q} + \mathcal{O}(\tilde{h}^{-1}), \quad \tilde{h} \gg 1 \tag{4.7}$$

so it is easy to check from the worst case that no more than four levels are

non-unitary for any particular $(\tilde{h}, q)$. As examples, the list

$$\begin{array}{l} (SU(2)_3)_{\#}^{q=2,3} \\ (SU(3)_{x=3,4})_{\#}^{q=2,3}, \ (SU(3)_4)_{\#}^{4\le q\le 14} \\ (SU(4)_{x=4,5})_{\#}^{q=2,3}, \ (SU(4)_{x=4,5})_{\#}^{q=4,5}, \ (SU(4)_5)_{\#}^{q\ge 6} \\ (SU(5)_{x=4,5,6})_{\#}^{q=2,3}, \ (SU(5)_{x=5,6})_{\#}^{4\le q\le 9}, \ (SU(5)_5)_{\#}^{10\le q\le 24} \end{array} \tag{4.8}$$

contains all the non-unitary points of $(SU(n)_x)_{\#}^{q\ge 2}$, $2 \le n \le 5$. The non-unitary points in $(SU(2))_{\#}^{q}$, which form the tip of the wedge, were noted in [18].

Figures 2a, 2b and 2c show three slices of the construction at q =2, 3 and 256, in which the evolution of the wedge is clearly visible.

The lowest type-two central charges in the construction occur at $x = q = 3$ with $\varepsilon = 1, \eta = -1$:

$$c\left((SU(5)_3)_{\#}^3\right) = \frac{27}{2}\left(1 - \frac{111 - 2\sqrt{489}}{3\sqrt{9317 - 324\sqrt{489}}}\right) \simeq 7.0231 \tag{4.9a}$$

$$c\left((SO(8)_3)_{\#}^3\right) = 14\left(1 - \frac{5(36 - \sqrt{249})}{7\sqrt{4137 - 216\sqrt{249}}}\right) \simeq 6.5088 \tag{4.9b}$$

$$c\left(((E_6)_3)_{\#}^3\right) = \frac{117}{5}\left(1 - \frac{4185 - 99\sqrt{465}}{117\sqrt{6510 - 270\sqrt{465}}}\right) \simeq 7.7648 \tag{4.9c}$$

$$c\left(((E_7)_3)_{\#}^3\right) = \frac{57}{2}\left(1 - \frac{6768 - 51\sqrt{4929}}{57\sqrt{66897 - 864\sqrt{4929}}}\right) \simeq 8.3219 \tag{4.9d}$$

$$c\left(((E_8)_3)_{\#}^3\right) = \frac{372}{11}\left(1 - \frac{6636 - 29\sqrt{15441}}{31\sqrt{205473 - 1512\sqrt{15441}}}\right) \simeq 8.8749 \tag{4.9e}$$

and, more generally, the type-two central charge (4.1d) increases irrationally with $\tilde{h}$, x or q at fixed ε, η. In particular, we verify that the central charge approaches correctly-bounded integers from below at high level

$$\lim_{k\to\infty} c = q \dim \Phi_+(g) + (q + \varepsilon\eta(q-2)) \mathrm{rank}\, g/2 \tag{4.10}$$

in agreement with the asymptotic form (2.7). Similarly, the integer central charges

$$c = \frac{n}{2}[qx + \eta(q(x-1) + \varepsilon(q-2))] + \mathcal{O}(1), \quad n \gg 1 \tag{4.11}$$

are observed for the classical groups $SU(n)$ and $SO(2n)$ at large n.

5 Unitary Subspaces of Lower Irrational Type

Type-one irrational constructions, involving only a single root, live generically in two-dimensional subspaces of the type-two construction. The complete list of unitary two-dimensional type-one subspaces of (simply-laced $g_x)_{\#}^{q\ge 2}$ is as follows

$$\begin{array}{ll} \text{A.} & (SU(2)_x)_{\#}^{q\ge 3} \\ \text{B.} & (\text{simply-laced}\, g_2)_{\#}^{q\ge 2} \\ \text{C.} & (\text{simply-laced}\, g_x)_{\#}^{2} \\ \text{D.} & (\text{simply-laced}\, g_{\tilde{h}+2})_{\#}^{q\ge 2} \\ \text{E.} & (\text{simply-laced}\, g_{\frac{\tilde{h}}{2}+1})_{\#}^{q\ge 2}, \ (\varepsilon = -1, g \ne SU(n \text{ odd})) \\ \text{F.} & \text{the curved boundary of the wedge } (W = 0) \end{array} \tag{5.1}$$

where the subspaces A,B,C and F form the boundaries of the unitary region. A view of the type-one subspaces A,B,D,E and F from above at generic q is shown in Fig.3, and these subspaces are also visible in the explicit q-slices of Fig.2. The subconstructions D and E occur when W in (4.2d) is a perfect square, which also generates type-one solutions sporadically in the interior of the unitary region: as an example, the construction $(SU(5)_9)_{\#}^3$ with central charge

$$c\left((SU(5)_9)_{\#}^3\right) = \frac{162}{7}\left(1 + \eta\frac{1246 + 65\varepsilon}{\sqrt{77905349 - 1326780\varepsilon}}\right), \quad \varepsilon = \pm 1, \ \eta = \pm 1 \tag{5.2}$$

resides in the type-two region between $\tilde{h} = 2$ and $x = \tilde{h} + 2$ of Fig. 3.

The type-one subspace $(SU(2)_x)_{\#}^{q\ge 3}$ is known [18], and we give the explicit forms of the new type-one subconstructions B,C,D, and E in the following section. The type-one subspace F on the boundary of the wedge includes the particular cases

$$c\left((SU(5)_4)_{\#}^4\right) = \frac{64}{3}\left(1 + \eta\frac{\sqrt{34}}{16}\right), \quad \eta = \pm 1 \tag{5.3a}$$

$$c\left(((E_7)_{11})^{12}_{\#}\right) = \frac{8778}{29}\left(1+\eta\frac{\sqrt{2585}}{114}\right), \quad \eta = \pm 1 \tag{5.3b}$$

but this family of constructions is difficult to obtain explicitly over the full boundary. All the solutions on the boundary of the wedge exhibit a degeneracy, seen in the examples (5.3), such that the two solutions $\epsilon = \pm 1$ in (4.1) are identical copies because $W = 0$.

We also give the type-zero unitary subspaces of (simply-laced $g_x)^{q\geq 2}_{\#}$, all of which may be identified as known rational constructions. There is one unitary rational two-dimensional subspace in the construction [§]

$$x = \frac{\tilde{h}}{2} + 1 \quad (\epsilon = 1,\ g \neq SU(n \text{ odd})) \tag{5.4}$$

and a number of unitary rational one-dimensional subspaces [¶]

$$\begin{array}{lll}
1. & \tilde{h} = 2,\ x = 2 & (A \cap B,\ A \cap E,\ B \cap E) \\
2. & \tilde{h} = 2,\ q = 2 & \\
3. & \tilde{h} = 2,\ x = 4 & (A \cap D) \\
4. & x = 2,\ q = 2 & (B \cap C) \\
5. & x = 3,\ q = 4 & \\
6. & \left.\begin{array}{l} x = \frac{\tilde{h}}{2} + 1,\ q = 2 \\ \epsilon = -1,\ g \neq SU(n \text{ odd}) \end{array}\right\} & (C \cap E)
\end{array} \tag{5.5}$$

whose loci tend to be intersections (e.g. $A \cap B$) of the type-one constructions A-E above. The rational subspaces 1,2 and 3 were noted in [18]. Rational solutions are also found sporadically in the interior of the type-two and type-one unitary domains.

[§]The two-dimensional constructions $x = \frac{\tilde{h}}{2} + 1$, $\epsilon = 1$ are rational partners (h^q and $(g/h)^q$, with g/h the symmetric spaces of maximal dimension) [18] of the corresponding type-one solution E=(simply-laced $g_{\frac{\tilde{h}}{2}+1})^{q\geq 2}_{\#}$,$\epsilon = -1$, given explicitly in section 6.4. W is a perfect square for both choices $\epsilon = \pm 1$, and the quantity $V - 4\epsilon q^2 x(x-2)(\tilde{h}-2)(q-2)\sqrt{W}$ is a perfect square for the rational partners.

[¶]The rational subspaces in the list (5.5) are identified as follows: 1. $U(1)^q_x$ and $(SU(2)_x/U(1)_x)^q$. 2. Points in $(SU(2)_x \times SU(2)_x)^{\#}$, $x \neq 4$ and $(SU(2)^{\#}_4)^2$. 3. Points in $(SU(2)^{\#}_4)^q$. 4. h = Cartan(diag($g \times g$)) and $(g \times g)/h$. 5. Points in h = Cartan(simply-laced $g^4_3)^{\#}$ and (simply-laced $g^4_3)/h$. 6. $h \times h$ and $g/h \times g/h$ with g/h the symmetric spaces of maximal dimension.

The maximal-symmetric construction ((simply-laced $g_x)^q)^{\#}_M$, defined in (1.9), includes the known one-dimensional construction simply-laced $g^{\#}_x$ [18] as another type-one subspace when $q = 1$. The more general construction is visualized with a single extra layer just beneath the $(\tilde{h}, x)$ plane of Fig.1. The central charge of simply-laced $g^{\#}_x$ [18]

$$c = \frac{x \operatorname{rank} g}{2(\tilde{h}+x)}[\tilde{h} + 1 + \eta B^{-1}(\tilde{h}^2(x-2) + \tilde{h}(12-5x) + 2x^2 - 10x + 16)] \tag{5.6a}$$

$$\begin{aligned} B^{-1} &\equiv (\tilde{h}^2x^2 + 4\tilde{h}(x^3 - 13x^2 + 40x - 32) + 4(x^4 - 10x^3 + 41x^2 - 80x + 64))^{-1/2} \\ &\equiv U_1^{(\epsilon=-1)}/(x-4) \end{aligned} \tag{5.6b}$$

is obtainable by continuation to $q = 1$ of c((simply-laced $g_x)^{q\geq 2}_{\#}$) in (4.1d). Similarly, the coefficients of simply-laced $g^{\#}_x$ may be obtained by setting $\ell = 0$ and then $q = 1$ in the general solution (4.1a-c).

6 New Unitary Type-One Subspaces

6.1 (Simply-laced g_2)$_\#^{q\geq 2}$

The type-one subspace (simply-laced g_2)$_\#^{q\geq 2}$

$$\ell_d = \frac{1}{2(\tilde{h}+2)}[1 - \frac{\eta}{2}(S^{-1}(\tilde{h}^2-4)(q-2) - \varepsilon\tilde{h})] \tag{6.1.1a}$$

$$\ell = \frac{\eta S^{-1}}{2}(\tilde{h}-2) \tag{6.1.1b}$$

$$L_- = \frac{1}{2(\tilde{h}+2)}[1-\eta\varepsilon], \quad L_+ = \eta S^{-1}(q-2) \tag{6.1.1c}$$

$$c = \frac{q\,\mathrm{rank}\,g}{(\tilde{h}+2)}[\tilde{h}+1-\frac{\eta}{2}(S^{-1}(\tilde{h}^2-4)(q-2)+\varepsilon\tilde{h})] \tag{6.1.1d}$$

$$S \equiv \sqrt{q^2(\tilde{h}+2)^2 - 32\tilde{h}(q-1)} \tag{6.1.1e}$$

lives on a boundary of (simply-laced g_x)$_\#^{q\geq 2}$. The subconstruction is completely unitary, as noted in Section 4, and the subspace is clearly visible in the q-slices of Fig.2, becoming rational at $q = 2$. The lowest irrational central charges of the subconstruction are found at $q = 3$ with $\varepsilon = \eta = 1$

$$c\left((SU(3)_2)_\#^3\right) = 3\left(1-\frac{1}{\sqrt{33}}\right) \simeq 2.4778 \tag{6.1.2a}$$

$$c\left((SO(8)_2)_\#^3\right) = 6\left(1-\frac{1}{2\sqrt{3}}\right) \simeq 4.2679 \tag{6.1.2b}$$

$$c\left(((E_6)_2)_\#^3\right) = 9\left(1-\frac{5}{\sqrt{249}}\right) \simeq 6.1482 \tag{6.1.2c}$$

$$c\left(((E_7)_2)_\#^3\right) = \frac{21}{2}\left(1-\frac{4}{\sqrt{153}}\right) \simeq 7.1045 \tag{6.1.2d}$$

$$c\left(((E_8)_2)_\#^3\right) = 12\left(1-\frac{7}{2\sqrt{114}}\right) \simeq 8.0663 \tag{6.1.2e}$$

and, more generally, the central charge (6.1.1d) increases irrationally with rank g and/or q at fixed ε, η.

6.2 (Simply-laced g_x)$_\#^2$

The type-one subspace (simply-laced g_x)$_\#^2$

$$\ell_d = \frac{1}{2(\tilde{h}+x)}[1-\eta R^{-1}\tilde{h}(\tilde{h}-2)] \tag{6.2.1a}$$

$$\ell = -\frac{\varepsilon\eta R^{-1}}{2x}\sqrt{x(2x-\tilde{h}-2)(2x^2-x(\tilde{h}+10)+16)} \tag{6.2.1b}$$

$$L_- = \frac{1}{2(\tilde{h}+x)}[1+\eta R^{-1}x(\tilde{h}-2)], \quad L_+ = -\eta R^{-1}(x-2) \tag{6.2.1c}$$

$$c = \frac{x\,\mathrm{rank}\,g}{(\tilde{h}+x)}[\tilde{h}+1+\eta R^{-1}\tilde{h}(\tilde{h}-2)(x-1)] \tag{6.2.1d}$$

$$R \equiv \sqrt{\tilde{h}^2x^2 + 4\tilde{h}(x^3-7x^2+12x-8) + 4x(x^3-6x^2+13x-8)} \tag{6.2.1e}$$

lives on a second boundary of (simply-laced g_x)$_\#^{q\geq 2}$. In this case, the central charge (6.2.1d) of the subconstruction is a function of η only, and the values $\varepsilon = \pm 1$ label two physically equivalent copies of the same K-conjugate pair ($\eta = \pm 1$) according to the automorphism $\ell \to -\ell$. This subconstruction is the worst possible case for unitarity, since the subspace includes the base of the wedge, seen clearly in Fig.2a. The lowest unitary irrational central charges of the subconstruction are found at $\eta = -1$,

$$c\left((SU(3)_5)_\#^2\right) = 5\left(1-\frac{3}{\sqrt{889}}\right) \simeq 4.4969 \tag{6.2.2a}$$

$$c\left((SO(8)_3)_\#^2\right) = \frac{28}{3}\left(1-\frac{8}{7\sqrt{5}}\right) \simeq 4.5631 \tag{6.2.2b}$$

$$c\left(((E_6)_3)_\#^2\right) = \frac{78}{5}\left(1-\frac{30}{13\sqrt{15}}\right) \simeq 6.3048 \tag{6.2.2c}$$

$$c\left(((E_7)_3)_\#^2\right) = 19\left(1-\frac{288}{19\sqrt{597}}\right) \simeq 7.2129 \tag{6.2.2d}$$

$$c\left(((E_8)_3)_\#^2\right) = \frac{248}{11}\left(1-\frac{840}{31\sqrt{1797}}\right) \simeq 8.1342 \tag{6.2.2e}$$

and, more generally, the central charge (6.2.1d) increases irrationally with rank g and/or x at fixed ε and η.

6.3 (Simply-laced $g_{\tilde{h}+2})_{\#}^{q\geq 2}$

The type-one subspace (simply-laced $g_{\tilde{h}+2})_{\#}^{q\geq 2}$ is

$$\ell_d = \frac{1}{4(\tilde{h}+1)}[1+\eta\left((\tilde{h}^2-\tilde{h}-2)U_1^{(\varepsilon)}-\tilde{h}U_2^{(\varepsilon)}\right)] \tag{6.3.1a}$$

$$\ell = \frac{\eta}{2(q-2)(\tilde{h}+2)}[-(\tilde{h}^2-4)U_1^{(\varepsilon)}+\tilde{h}U_2^{(\varepsilon)}] \tag{6.3.1b}$$

$$L_- = \frac{1}{4(\tilde{h}+1)}[1+\eta U_2^{(\varepsilon)}], \quad L_+ = -\eta U_1^{(\varepsilon)} \tag{6.3.1c}$$

$$c = \frac{1}{4}q\,\mathrm{rank}\,g(\tilde{h}+2)[1+\eta(\tilde{h}-2)U_1^{(\varepsilon)}] \tag{6.3.1d}$$

where the auxiliary quantities in (4.2) have simplified to

$$U_1^{(\varepsilon)} \equiv (\tilde{h}^2q^2-4(q-2)^2)(R^{(\varepsilon)})^{-1/2} \tag{6.3.2a}$$

$$U_2^{(\varepsilon)} \equiv q(\tilde{h}^2-4)(\tilde{h}q-2\varepsilon(q-2))(R^{(\varepsilon)})^{-1/2} \tag{6.3.2b}$$

$$R^{(\varepsilon)} \equiv q^3(\tilde{h}^2-4)^2[q(9\tilde{h}^2+8\tilde{h}+4)-4\varepsilon\tilde{h}(q-2)]+$$
$$+16(q-1)[q^2(\tilde{h}^2-4)(3\tilde{h}+2)(5\tilde{h}+2)+128(q-1)\tilde{h}(\tilde{h}+1)]. \tag{6.3.2c}$$

The subconstruction is completely unitary since it resides inside the unitary domain of (simply-laced $g_x)_{\#}^{q\geq 2}$, as shown in Fig.3. The subspace is also clearly visible as the diagonal unit entries in the $q=3$ and $q=256$ slices of Figs.2b and 2c. The lowest irrational central charges of the subconstruction are found at $q=2$, $\varepsilon=1$, $\eta=-1$,

$$c\left((SU(3)_5)_{\#}^2\right) = 5\left(1-\frac{3}{\sqrt{889}}\right) \simeq 4.4969 \tag{6.3.3a}$$

$$c\left((SO(8)_8)_{\#}^2\right) = 16\left(1-\frac{3}{\sqrt{205}}\right) \simeq 12.6475 \tag{6.3.3b}$$

$$c\left(((E_6)_{14})_{\#}^2\right) = 42\left(1-\frac{30}{\sqrt{12457}}\right) \simeq 30.7108 \tag{6.3.3c}$$

$$c\left(((E_7)_{20})_{\#}^2\right) = 70\left(1-\frac{36}{\sqrt{15451}}\right) \simeq 49.7268 \tag{6.3.3d}$$

$$c\left(((E_8)_{32})_{\#}^2\right) = 128\left(1-\frac{105}{\sqrt{117169}}\right) \simeq 88.7361 \tag{6.3.3e}$$

and, more generally, the central charge (6.3.1d) increases irrationally with rank g and/or q at fixed ε and η.

6.4 (Simply-laced $g_{\frac{\tilde{h}}{2}+1})_{\#}^{q\geq 2}$

The type-one subspace (simply-laced $g_{\frac{\tilde{h}}{2}+1})_{\#}^{q\geq 2}$ ($\varepsilon=-1$, $g\neq SU(n\text{ odd})$) is

$$\ell_d = \frac{1}{(3\tilde{h}+2)}[1+\frac{\eta}{4}\left((3\tilde{h}^2-4\tilde{h}-4)U_1-(3\tilde{h}-2)U_2\right)] \tag{6.4.1a}$$

$$\ell = \frac{\eta(\tilde{h}-2)}{2(q-2)(\tilde{h}+2)}[-(\tilde{h}+2)U_1+U_2] \tag{6.4.1b}$$

$$L_- = \frac{1}{(3\tilde{h}+2)}[1+\eta U_2], \quad L_+ = -\eta U_1 \tag{6.4.1c}$$

$$c = \frac{q\,\mathrm{rank}\,g(\tilde{h}+2)}{2(3\tilde{h}+2)}[\tilde{h}+1+\frac{\eta}{4}\left((3\tilde{h}^2-4\tilde{h}-4)U_1+(\tilde{h}+2)U_2\right)] \tag{6.4.1d}$$

where the auxiliary quantities in (4.2) have simplified to

$$U_1 \equiv \frac{1}{4}(q(\tilde{h}+2)-8)(q(\tilde{h}-6)+8)R^{-1/2} \tag{6.4.2a}$$

$$U_2 \equiv \frac{1}{4}(\tilde{h}+2)(16(q-2)^2+q^2(\tilde{h}-2)^2)R^{-1/2} \tag{6.4.2b}$$

$$R \equiv \frac{1}{4}q^4(\tilde{h}+2)^2(\tilde{h}^4-12\tilde{h}^3+52\tilde{h}^2-64\tilde{h}+64)+$$
$$+16(q-1)[q^2(\tilde{h}^4-8\tilde{h}^3-16\tilde{h}^2-16)+64\tilde{h}^2(q-1)]. \tag{6.4.2c}$$

Since it resides outside the wedge, this subconstruction is also completely unitary. The subspace is clearly visible in the slices of Fig.2 as the (1,0) pairs ‖ of Figs.2b,c, which become rational at $q=2$ in Fig.2a. The lowest irrational central charges of the subconstruction are found at $q=3$, $\eta=-1$,

$$c\left((SU(4)_3)_{\#}^3\right) = \frac{135}{14}\left(1-\frac{513}{135\sqrt{106}}\right) \simeq 6.0838 \tag{6.4.3a}$$

‖ The paired zeros in the (1,0) entries of Figs.2b,c are the rational partners with $\varepsilon=1$ of (simply-laced $g_{\frac{\tilde{h}}{2}+1})_{\#}^{q\geq 2}$, $\varepsilon=-1$.

$$c\left((SO(8)_4)^3_\#\right) = \frac{84}{5}\left(1 - \frac{20}{21\sqrt{5}}\right) \simeq 9.6446 \qquad (6.4.3b)$$

$$c\left(((E_6)_7)^3_\#\right) = \frac{819}{19}\left(1 - \frac{4027}{39\sqrt{50066}}\right) \simeq 23.2134 \qquad (6.4.3c)$$

$$c\left(((E_7)_{10})^3_\#\right) = \frac{285}{4}\left(1 - \frac{11633}{57\sqrt{185641}}\right) \simeq 37.5007 \qquad (6.4.3d)$$

$$c\left(((E_8)_{16})^3_\#\right) = \frac{2976}{23}\left(1 - \frac{12391}{93\sqrt{75821}}\right) \simeq 66.7827 \qquad (6.4.3e)$$

and, more generally, the central charge (6.4.1d) increases irrationally with rank g and/or q at fixed η.

We finally note that the lowest unitary irrational central charge in the construction (simply-laced $g_x)^{q\geq 2}_\#$ is $c((SU(3)_2)^3_\#)$ in (6.1.2a). The lowest unitary central charge in the maximal-symmetric construction ((simply-laced $g_x)^q)^\#_M$ remains the original value [18]

$$c\left((SU(3)_3)^\#\right) = 2\left(1 - \frac{1}{\sqrt{73}}\right) \simeq 1.7659 \qquad (6.4.4)$$

obtained in simply-laced $g^\#_x$.

Acknowledgements

We thank A. Morozov, E. Kiritsis and M. Porrati for helpful conversations.

References

[1] V.G. Kač, Funct. Anal. App. 1 (1967) 328; R.V. Moody, Bull. Am. Math. Soc. 73 (1967) 217.

[2] K. Bardacki and M.B. Halpern, Phys. Rev. D3 (1971) 2493.

[3] P. Ramond, Phys. Rev. D3 (1971) 2415.

[4] M.B. Halpern, Phys. Rev. D4 (1971) 2398.

[5] M.B. Halpern, Phys. Rev. D12 (1975) 1684.

[6] T. Banks, D. Horn and H. Neuberger, Nucl. Phys. B108 (1976) 119.

[7] I.B. Frenkel and V.G. Kač, Inv. Math. 62 (1980) 23; G. Segal, Comm. Math. Phys. 80 (1981) 301.

[8] E. Witten, Comm. Math. Phys. 92 (1984) 455; G. Segal, unpublished; V.G. Knizhnik and A.M. Zamolodchikov, Nucl. Phys. B247 (1984) 83.

[9] P. Goddard, A. Kent and D. Olive, Phys. Lett. 152B (1985) 88.

[10] D. Gross, J.A. Harvey, E. Martinec and R. Rohm, Phys. Rev. Lett. 54 (1985) 502.

[11] J.K. Freericks and M.B. Halpern, Ann. of Phys. 188 (1988) 258; Erratum, ibid. 190 (1989) 212.

[12] M.B. Halpern, Ann. of Phys. 194 (1989) 247.

[13] P. Goddard and D. Olive, Int. J. Mod. Phys. A1 (1986) 303.

[14] I.B. Frenkel, J. Lepowsky and A. Meurman, to appear.

[15] M.B. Halpern and E. Kiritsis, Mod. Phys. Lett. A4 (1989) 1373; Erratum ibid. A4 (1989) 1797.

[16] M.B. Halpern and J.P. Yamron, preprint IASSNS-HEP-89/23 (1989). To appear in Nucl. Phys.

[17] A.Yu Morozov, A.M. Perelomov, A.A. Rosly, M.A. Shifman and A.V. Turbiner, preprint MIT-CTP-1741 (1989).

[18] M.B. Halpern, E. Kiritsis, N.A. Obers, M. Porrati and J.P. Yamron, preprint UCB-PTH-89/18 (1989). To appear in Int. J. Mod. Phys.

[19] L. Dixon, M.E. Peskin and J. Lykken, Nucl. Phys. B325 (1989) 329; I. Bars, preprint USC-89/HEP 02.

[20] E. Witten, preprint IASSNS-HEP-89/38.

[21] A.A. Beilinson and V.V. Schechtman, Comm. Math. Phys. 118 (1988) 651; N. Sakai and P. Suranyi, Nucl. Phys. B318 (1989) 655; M. Bershadsky and H. Ooguri, preprint IASSNS-HEP-89/9 (1989); M. Evans and B.A. Ovrut, preprint UPR-0392 (1989).

[22] K.S. Narain, Phys. Lett. 169B (1986) 41; K.S. Narain, M.H. Sarmadi and E. Witten, Nucl. Phys. B279 (1987) 369.

[23] A. Schwimmer and N. Seiberg, Phys. Lett. 184B (1987) 191.

[24] S. Ferrara, C. Kounnas and M. Porrati, Nucl. Phys. B304 (1988) 500 ; I. Antoniadis, C. Bachas and C. Kounnas, Phys. Lett. 200B (1988) 297.

[25] M.B. Halpern and C.B. Thorn, Phys. Rev. D4 (1971) 3084; E. Corrigan and D.B. Fairlie, Nucl. Phys. B91 (1975) 527; W. Siegel, Nucl. Phys. B109 (1976) 244.

[26] L. Dixon, J.A. Harvey, C. Vafa and E. Witten, Nucl. Phys. B261 (1985) 620; ibid. B274 (1986) 285.

[27] D.B. Fairlie as quoted in A. Chodos and C.B. Thorn, Nucl. Phys. B72 (1974) 509; J.-L. Gervais and A. Neveu, Nucl. Phys. B224 (1983) 329 ; B.L. Feigin and D.B. Fuchs, preprint Moscow University (1983); V.L. Dotsenko and V. Fateev, Nucl. Phys. B240 (1984) 312; D. Friedan, E. Martinec and S. Shenker, Nucl. Phys. B271 (1986) 93.

[28] A. Neveu and J.H. Schwarz, Nucl. Phys. B31 (1971) 86.

[29] S. Mandelstam, Phys. Rev. D7 (1973) 3777.

[30] A. Yu Morozov, M.A. Shifman and A.V. Turbiner, preprint BUTP-89/18-BERN (1989).

[31] I.B. Frenkel, J. Funct. Anal. 44 (1981) 259.

Figure Captions

Fig.1 The non-unitary wedge in (simply-laced $g_x)_{\#}^{q\geq 2}$.

Fig.2 a)(simply-laced $g_x)_{\#}^{2}$; b)(simply-laced $g_x)_{\#}^{3}$; c)(simply-laced $g_x)_{\#}^{256}$. The integers n are type-n irrational and N is non-unitary.

Fig.3 (Simply-laced $g_x)_{\#}^{q\geq 2}$ at fixed generic q. The lettered subspaces are defined in eq.(5.1); the integers n are type-n irrational, and the shaded region is the non-unitary wedge.

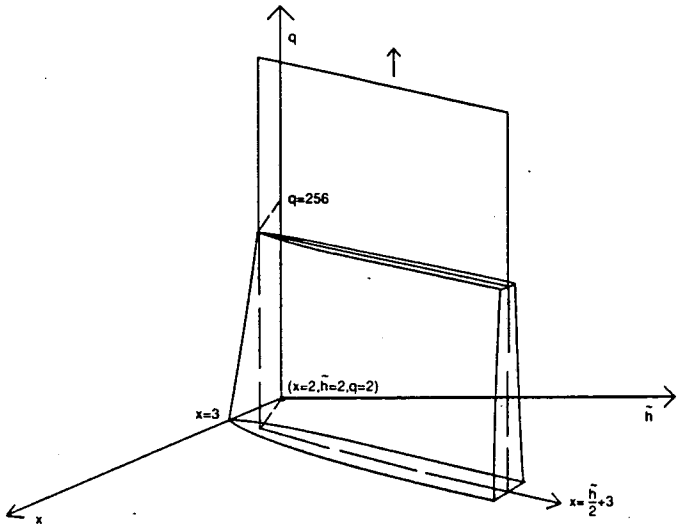

Fig. 1

h̃ \ x	2	3	4	5	6	7	8	9	10	11	12
2	0	N	0	0	0	0	0	0	0	0	0
3	0	N	N	1	1	1	1	1	1	1	1
4	0	0	N	N	0	1	1	1	1	1	1
5	0	1	N	N	N	1	1	1	1	1	1
6	0	1	0	N	N	1	1	1	1	1	1
7	0	1	1	N	N	N	1	1	1	1	1
8	0	1	1	0	N	N	1	1	1	1	1
9	0	1	1	1	N	N	N	1	1	1	1
10	0	1	1	1	0	N	N	N	1	1	1
11	0	1	1	1	1	N	N	N	1	1	1
12	0	1	1	1	1	0	N	N	N	1	1

Fig. 2a

h̃ \ x	2	3	4	5	6	7	8	9	10	11	12
2	0	N	0	1	1	1	1	1	1	1	1
3	1	N	N	1	2	2	2	2	2	2	2
4	1	0,1	N	N	1	2	2	2	2	2	2
5	1	2	N	N	N	1	2	1	2	2	2
6	1	2	0,1	N	N	2	1	2	2	2	2
7	1	2	2	N	N	N	2	1	2	2	2
8	1	2	2	0,1	N	N	1	2	1	2	2
9	1	2	2	2	N	N	N	2	2	1	2
10	1	2	2	2	0,1	N	N	N	2	2	1
11	1	2	1	2	2	N	N	N	2	2	2
12	1	2	2	2	2	0,1	N	N	N	2	2

Fig. 2b

h̃ \ x	2	3	4	5	6	7	8	9	10	11	12
2	0	1	0	1	1	1	1	1	1	1	1
3	1	2	2	1	2	2	2	2	2	2	2
4	1	0,1	2	N	1	2	2	2	2	2	2
5	1	2	2	2	2	1	2	2	2	2	2
6	1	2	0,1	2	N	2	1	2	2	2	2
7	1	2	2	2	2	2	2	1	2	2	2
8	1	2	2	0,1	2	N	1	2	1	2	2
9	1	2	2	2	2	2	2	2	2	1	2
10	1	2	2	2	0,1	2	N	2	2	2	1
11	1	2	1	2	2	2	2	2	2	2	2
12	1	2	2	2	2	0,1	2	N	2	2	2

Fig. 2c

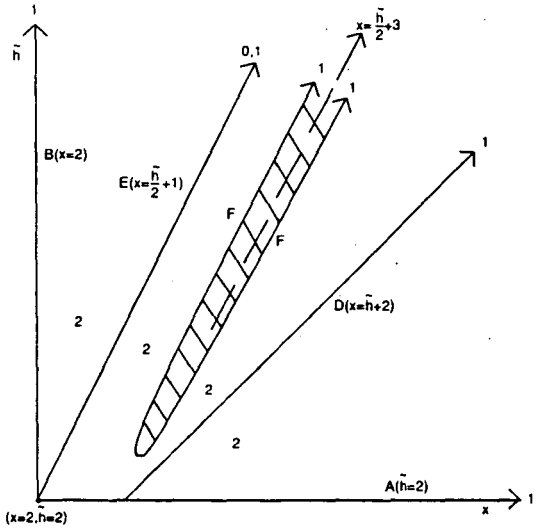
1
$\tilde{h}$
0,1
$x=\frac{\tilde{h}}{2}+3$
1
1
1
B(x=2)
$E(x=\frac{\tilde{h}}{2}+1)$
F
F
$D(x=\tilde{h}+2)$
2
2
2
2
$A(\tilde{h}=2)$
1
x
$(x=2,\tilde{h}=2)$

Fig. 3