LBL-28270

Lawrence Berkeley Laboratory
UNIVERSITY OF CALIFORNIA

APPLIED SCIENCE DIVISION

Presented at the 1990 SAE Congress & Exposition,
Detroit, MI, February 26–March 2, 1990

A Methodology for Inhibiting the Formation of Pollutants in Diesel Engines

A.K. Oppenheim, N.J. Beck, K. Hom, J.A. Maxson, and H.E. Stewart

January 1990

TWO-WEEK LOAN COPY

This is a Library Circulating Copy which may be borrowed for two weeks.

APPLIED SCIENCE DIVISION

LBL-28270 Copy 2
Bldg. 50 Library.

Prepared for the U.S. Department of Energy under Contract Number DE-AC03-76SF00098.

DISCLAIMER

This document was prepared as an account of work sponsored by the United States Government. While this document is believed to contain correct information, neither the United States Government nor any agency thereof, nor the Regents of the University of California, nor any of their employees, makes any warranty, express or implied, or assumes any legal responsibility for the accuracy, completeness, or usefulness of any information, apparatus, product, or process disclosed, or represents that its use would not infringe privately owned rights. Reference herein to any specific commercial product, process, or service by its trade name, trademark, manufacturer, or otherwise, does not necessarily constitute or imply its endorsement, recommendation, or favoring by the United States Government or any agency thereof, or the Regents of the University of California. The views and opinions of authors expressed herein do not necessarily state or reflect those of the United States Government or any agency thereof or the Regents of the University of California.

LBL-28270

A Methodology for Inhibiting the Formation of Pollutants in Diesel Engines

A.K. Oppenheim, K. Hom, J.A. Maxson,
Mechanical Engineering Department
University of California
and
Applied Science Division
Lawrence Berkeley Laboratory
University of California
Berkeley, CA 94720

N.J. Beck
BKM, Inc.
San Diego, CA

and

H.E. Stewart
Mechanical Engineering Department
University of California
Berkeley, CA 94720

January 1990

This work was supported by the Director, Office of Energy Research,
Office of Basic Energy Science,Engineering and Geosciences Division
of the U. S. Department of Energy under Contract No. DE-AC03-76SF00098,
and by the U.S. Army Research Office under Contract No. DAAL03-87-K-0123.

A METHODOLOGY FOR INHIBITING THE FORMATION OF POLLUTANTS IN DIESEL ENGINES

by
A. K. Oppenheim, N. J. Beck*, K. Hom,
J. A. Maxson, and H. E. Stewart
University of California, Berkeley

ABSTRACT

The methodology put forth in this paper stems from the premise that the primary reason for the generation of major pollutants by diesel engines, particulates and nitric oxides, is associated with over-reliance upon diffusion flames to carry out the process of combustion. Specific means are, therefore, proposed to inhibit their formation. This consists of refinements involving the use of either hollow cone spray injectors or air blast atomizers. Concomitantly, the process of combustion is staged by either regulating the rate of injection or employing a number of consecutively activated injectors per cylinder under a microprocessor command, while regions of high temperature peaks are distributed throughout the charge and kept at a relatively low level by exploiting the large scale vortex structure of turbulent pulsed jets combined with residual gas recirculation. Most appropriate for the realization of these concepts is a two-stroke, loop scavenged engine with special provisions included to curb emission of unburned hydrocarbon due to lubricating oil.

MAJOR POLLUTANTS of diesel engines are particulates and nitric oxides. Both are generated by diffusion flames on which these engines rely to carry out the process of combustion. Such flames occur in non-premixed systems, that is when fuel is introduced separately from air. The flame front establishes then itself at the stoichiometric contour where the highest temperature, the fuel is capable of achieving by combustion in air, is attained. Created thus are optimum conditions for the formation of nitric oxide, as a consequence of the exponential growth in the rate of its generation with the temperature. This has been clearly manifested by the rapid rise of the average NO concentration in the cylinder, measured by gas sampling, that has been found to take place within the so-called premixed combustion period occurring at the start of the exothermic process (1,2). To make matters worse, the number density of fuel droplets in the spray is often, especially at full load, so high, that the separation between them becomes smaller than the stand-off distance of the flame front. Under such circumstances the exothermic process occurs in a group combustion mode (3). The flame forms then an envelope around the spray, whereby its regime gets rapidly depleted of oxygen, whereas, in approaching the high temperature zone of the front in a reducing atmosphere, the fuel undergoes the process of pyrolysis, forming soot. The same holds true, of course, for individual droplets. However, if their diameter is relatively small (say in the 10 micron range) and they are immersed in a highly turbulent flow field of the hot compressed air, the rate of their evaporation and mixing may be sufficiently high to alleviate the problem.

All this is well known. However, relatively little has been done so far to exploit this knowledge in order to prevent the formation of these pollutants by inhibiting the formation of diffusion flames. The purpose of this paper is to demonstrate how this could be accomplished.

In principle the recipe is quite simple: evaporate and mix fuel with air before the exothermic process of combustion takes place. Concomitantly, of course, any contact of liquid fuel with cold wall should be prevented for its particularly detrimental consequences. Obviously one deprives then the system of the intrinsic advantages of diffusion flames, in particular their remarkable stability and dependability, associated with independence of the overall air/fuel ratio - attributes that made diesel engines so successful in terms of their controllability and fuel economy. Special means must be thus provided for this purpose. The implementation of the simple recipe requires, therefore, a good deal of sophistication - an ingredient that in our times of high-tech should be well within grasp.

Considered in the paper are two examples how such a goal could be approached:

1. Hollow cone injection
2. Pulsed air blast atomization

Both of them are associated with charge dilution in order to keep peak temperatures at a relatively low level and as sufficiently well distributed throughout the charge to effectively impede the establishment of high temperature diffusion flame envelope. The most convenient diluent is the residual gas. Hence, its recirculation should be instrumental in this connection, a requirement favoring loop scavenged two-stroke engines.

According to the first of these means, fuel is

* President, BKM, Inc., San Diego, California.

injected in the form of a conical sheet that breaks into a finely atomized spray. Formed thus, in effect, is a turbulent wake of air inside a liquid jet of fuel - a situation that, if properly executed, should enhance considerably the atomization of liquid fuel and its mixing with air, associated with vaporization. The bulk of the exothermic process of combustion may take place then in a premixed system created in the cores of large scale vortices of which the flow field, under such circumstances, is then made up. It should be borne in mind that the success of this system relies on the advantages of very fast fuel injection, short induction period, and enhanced mixing. Molecular diffusion should be thereby overwhelmed by convection due to the large scale vortex structure of the turbulent flow field formed within the hollow cone of the spray sheet, inhibiting thus the formation of a diffusion flame.

The second is a system where an air stream is employed to atomize the fuel by shear into fine droplets that are thereupon mixed with surrounding hot air by entrainment brought about by the large scale vortex field of the turbulent plume formed by the jet. For diesel application, this is, in effect, a pulsed version of the steady flow air blast atomizer that proved itself so successful in aircraft jet engines as the major factor in eliminating smoke emissions.

The two systems are presented here in turn.

HOLLOW CONE INJECTION

A hollow cone sheet of liquid fuel is produced by an unthrottled pintle nozzle depicted in Fig. 1. Its essential operating feature is that the pressure drop controlling the flow rate takes place at the seat of the pintle, upstream from the hole, while the pintle shaft extends through it to support a bluff body immersed in the efflux stream to form a conical sheet.

Of particular interest in this respect are the fluid mechanical effects. Fundamentally the structure of a flow field can be affected only by jets and/or wakes. Here the efflux stream forms a jet, while the bluff body creates a wake. Under normal conditions of a diesel engine, both are highly turbulent in nature, their action being associated with large scale eddy structures producing recirculation patterns, as illustrated by the classical case of the von Karman street. Of particular significance here is the recirculation generated in the wake at the apex of the cone, as, under proper conditions, it can entrain the compressed hot air deep inside the spray jet to aid significantly in the processes of atomization, mixing, and dispersion of the fuel. This enhances its evaporation and ignition, inhibiting thus the establishment of a diffusion flame, its raison d'être.

Practical advantages of hollow cone injection have been demonstrated recently by Zhu et al. (4) on the basis of an elaborate and thorough study on what, in their terminology, was referred to as CSCS (Conical Spray Combustion System). Considering its origin, the paper is quite remarkable in terms of the wealth of experimental data and analytical insight it presents. This includes such items as color schlieren photographs obtained using a square combustion chamber fitted with a matching extension of the piston, spray micrographs and deduced from them space and size distribution of fuel droplets (mean at 10 μm and maximum at 25 μm), profiles of local air/fuel ratios produced by the spray, as well as complete

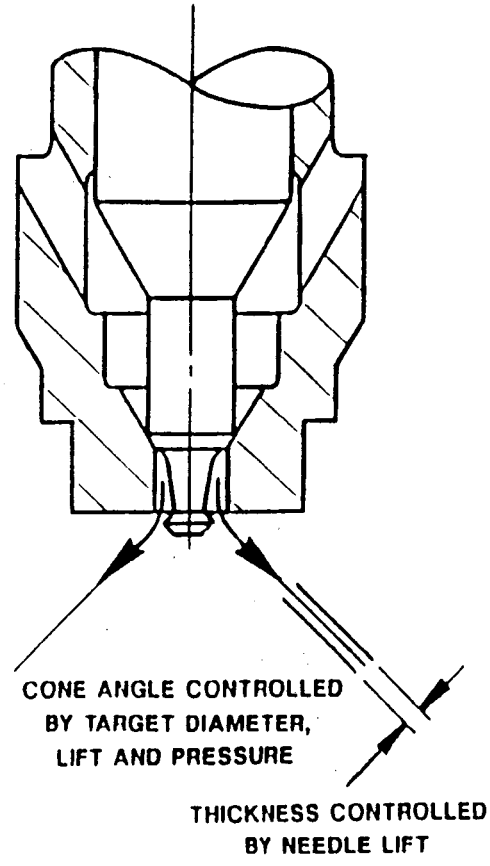

Fig. 1. Unthrottled pintle nozzle.

engine performance maps and the concomitant smoke emission data.

To explore the consequences of this mechanism, we employed two types of injectors, both of the common-rail accumulator type, one operating at a standard pressure in the hectobar range, and the other at a high pressure, kilobar level. The particular units we employed were produced by BKM, Inc. under the trade name of *Servojet*. Their construction is depicted in Figs. 2 and 3, respectively. The accumulator action is provided by a reservoir in the injector body that is first filled with high pressure oil through the control port, and then prevented from flowing back by a check valve which closes when the control port is opened to dump. All the action is carried out under the command of a solenoid operating a fast acting three-way valve located at the entrance to the control port, Fig. 4. As the description of the structural features and operating characteristics of the units depicted in Figs. 2, 3 and 4 is readily available in the literature (5-10), it is not presented here.

It should be borne in mind that the accumulator type injectors have been around for about half a century. One of the best renditions of their performance characteristics was provided by Hooker in his report on the Orion engine (11). General Motors Research Laboratories experimented with accumulator injectors for nearly a decade in the nineteen sixties, and they were used successfully in the GMR Hyprex free-piston engine for high pressure fast injection of heavy fuel (12). Pressure intensifier and electronic controls were added to the accumulator injector by BKM in 1980. This yielded a

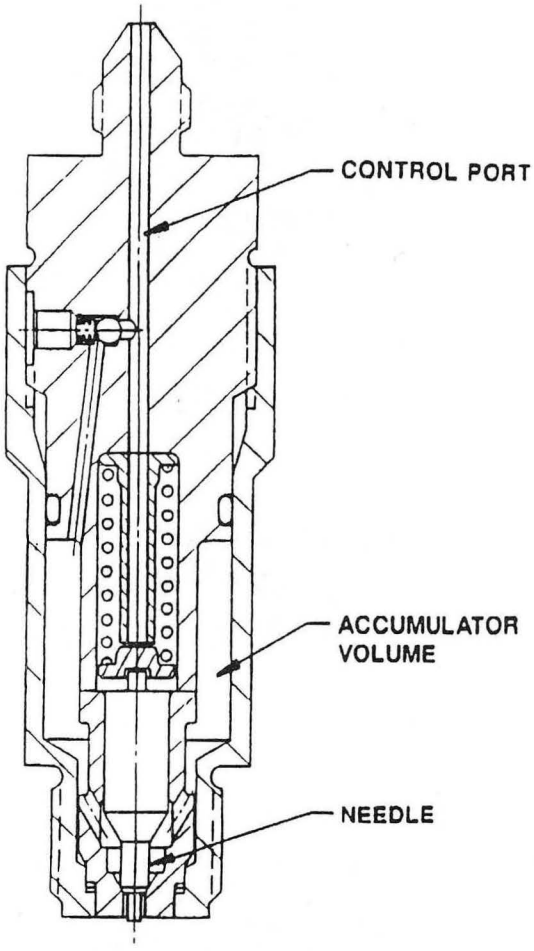

Fig. 2. Servojet hectobar injector.

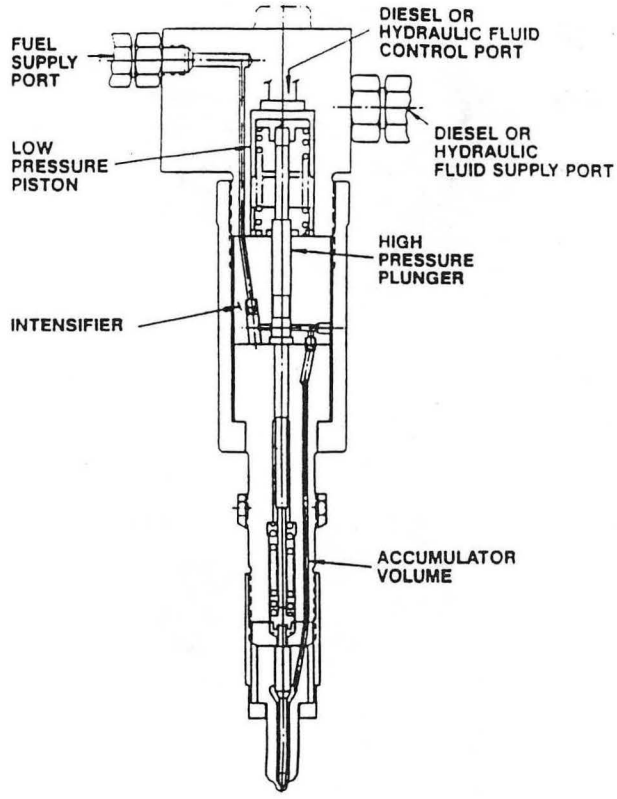

Fig. 3. Servojet kilobar injector.

versatile system, applicable to a wide variety of fuels and engines. Its salient features include such properties as high pressure, high rate of injection, and rate shaping, carried out under electronic control.

To provide a basis for the assessment of the advantages of hollow cone injection, it was compared to stream injection, a mode of the process realized by replacing the conical tip of the pintle by a cylinder, as actually shown in Fig. 2.

Preliminary tests were carried out in a shock tube facility behind the reflected wave, a system providing thermodynamic and fluid mechanic conditions commensurate with those existing in typical diesel engines at the time of fuel injection, that is pressures at a level of 20-30 atm, and temperatures in the range of 800-1000K, and high turbulence intensity. The description of the shock tube and its modus operandi is provided in the Appendix.

The primary objective of our preliminary tests reported here was to explore the salient features of the flow field of the spray and its combustion. Experimental data consist then principally of high speed cinematographic schlieren records and time resolved pressure measurements.

The experimental results we obtained are presented by Figs. 5-9. Figures 5 and 6 pertain to stream injectors in, respectively, a hectobar and kilobar version, while Figs. 7 and 8 to the corresponding hollow cone injectors. Each case is portrayed by prints of illustrative frames of schlieren movies. The corresponding pressure transducer records are displayed in Fig. 9.

The last picture of Fig. 6 is a photomontage made out of records obtained in two separate test runs. The obvious reason for this was that the 3.5 in. window was not sufficiently large to accommodate all the events under study. A 2 in. spacer was therefore inserted to shift the injector plate back in order to get a complete record of the events under study. As apparent from the composite

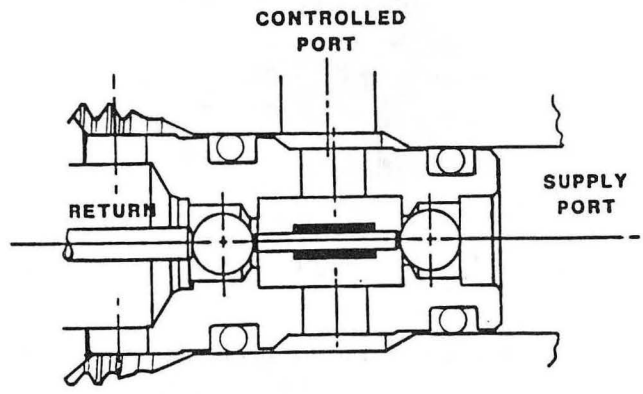

Fig. 4 Servojet fast acting solenoid three-way valve.

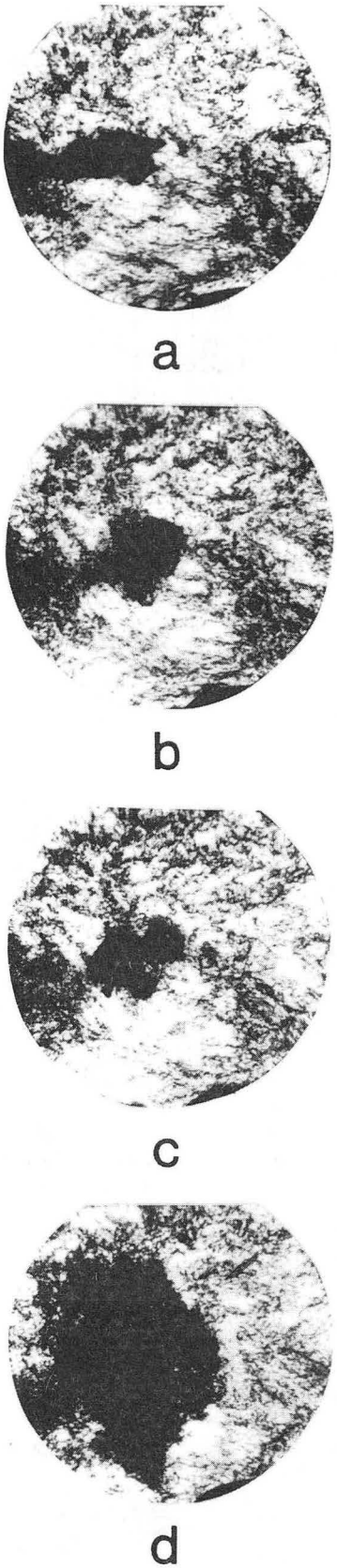

Fig. 5. Extracts of cinematographic schlieren records of the formation and combustion of a spray stream produced by a hectobar injector.
(a) injection, (b) dispersion, (c) ignition, (d) inflammation

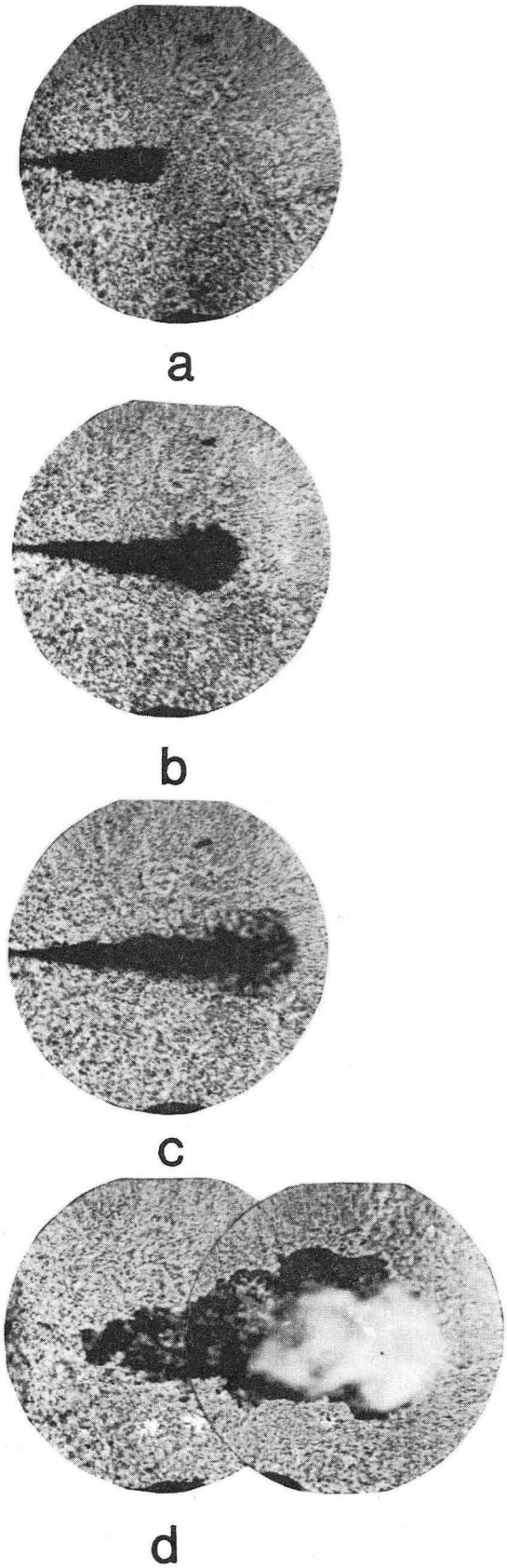

Fig. 6. Extracts of cinematographic schlieren records of the formation and combustion of a spray stream produced by a kilobar injector.
(a) injection, (b) dispersion, (c) ignition, (d) inflammation

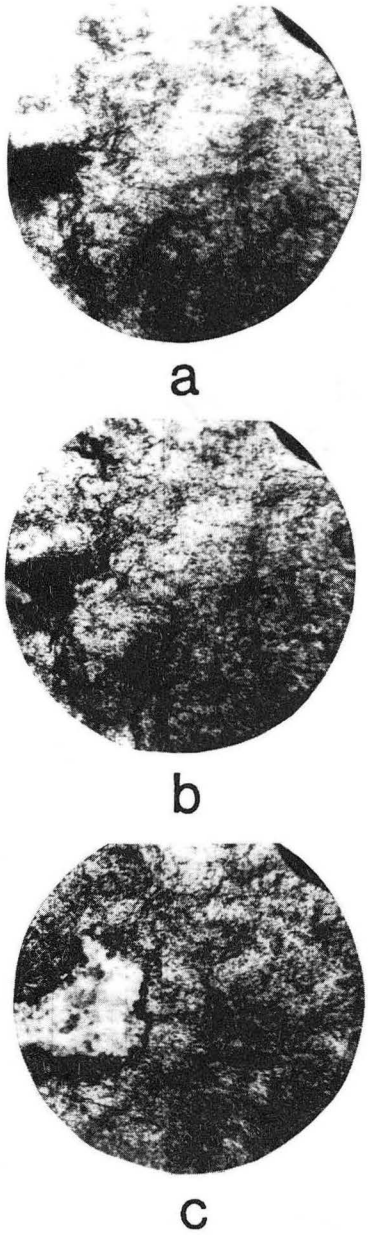

Fig. 7. Extracts of cinematographic schlieren records of the formation and combustion of a hollow cone spray produced by a hectobar injector.
(a) injection, (b) ignition, (c) inflammation

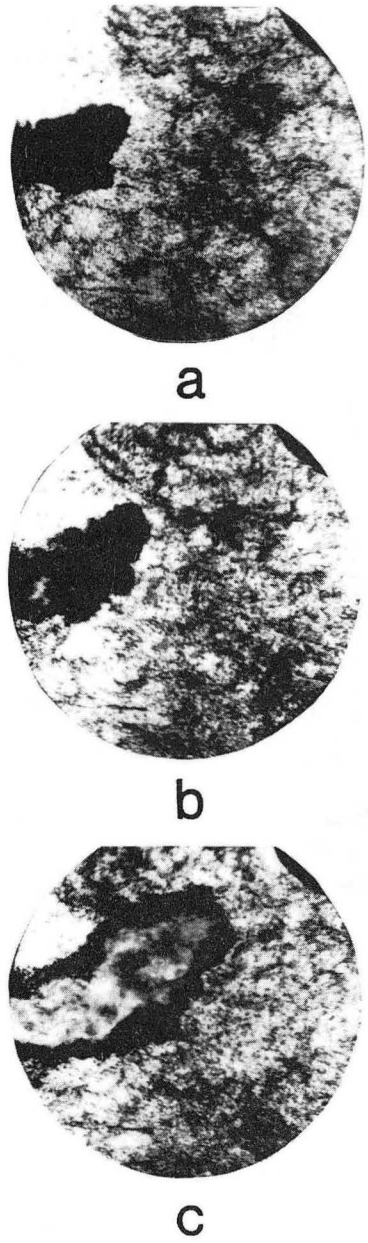

Fig. 8. Extracts of cinematographic schlieren records of the formation and combustion of a hollow cone spray produced by a kilobar injector.
(a) injection, (b) ignition, (c) inflammation

picture, we were successful in performing the two tests at sufficiently similar conditions to obtain consistent results.

On the black and white photographs shown here, the spray, as well as the combustion zone, appear as uniformly black irregularly shaped objects. Their identity is clearer on the cinematographic display and more details are evident in color movies shown at the meeting. The marbled background is due to the turbulent nature of the high temperature field created by the reflected shock as it interacts with the boundary layer generated by the incident wave. This is, in effect, similar to conditions encountered in diesel engines.

In the case of the single hole stream injectors there were four distinct events, presented in Figs. 5 and 6, that were clearly observable on schlieren movies:

1. discharge of a dense spray stream associated with fuel atomization, displayed in (a)
2. dispersion of the spray enhancing the access of hot air to droplets, displayed in (b)
3. ignition with the concomitant expansion, displayed in (c)
4. formation of a diffusion flame at the periphery of the expanding spray field, displayed in (d)

With hollow cone injectors, dispersion of the spray started at the moment of injection so that, as manifested by Figs. 7 and 8, there were in this case only three

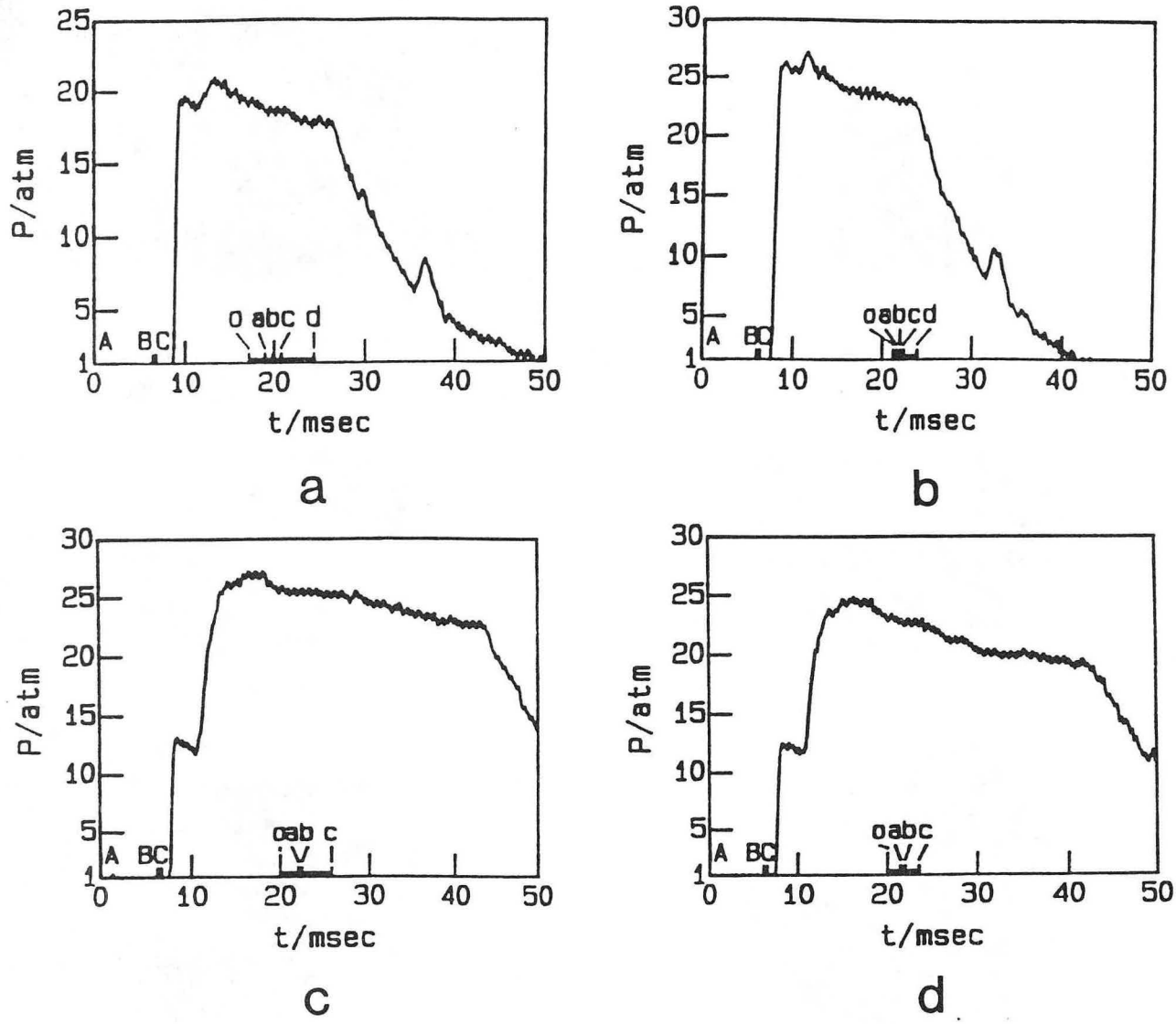

Fig. 9 Pressure transducer records of events displayed in Figs. 4-7.

discernible events:

1. start of spray discharge, depicted in (a)
2. ignition, depicted in (b)
3. formation of a diffusion flame, depicted in (c)

The instances to which these records pertain are indicated on the time scale of the pressure transducer records, Fig. 9, by small letters. Capital letters denote the timing marks of pressure transducers A, B and C whose location in the shock tube is indicated on Fig. A. Pressure traces displayed in Fig. 10 have been taken by transducer D located in the center of the test section. Instant O on the time scale indicates the moment of injection, recorded by a transducer situated in the fuel line.

The conditions of ambient atmosphere in the test section, for the four experimental records presented here, were as follows:

	a	b	c	d
Pressure/atm.	19	24	26	23
Temperature/K	825	936	972	937

As it is clearly evident from Fig. 9, the time scale of events initiated by the hollow cone injection is distinctly shorter than in the case of a stream jet. This demonstrates the major advantage of the hollow cone spray, produced by the unthrottled pintle nozzle, in concentrating the combustion zone within a relatively small region of space in the cylinder, away from the walls.

PULSED AIR BLAST ATOMIZATION

The principle of air blast atomization has been well established in aircraft gas-turbine engineering (13), primarily as a consequence of its success in abating the formation of particulates. For diesel engines it is implemented in terms of a pulsed version illustrated by the conceptual design depicted in Fig. 10.

The purpose of this device is to exploit the so-called coherent structure of a turbulent jet plume exhibited in Fig. 11. As evident from it, the flow field consists then

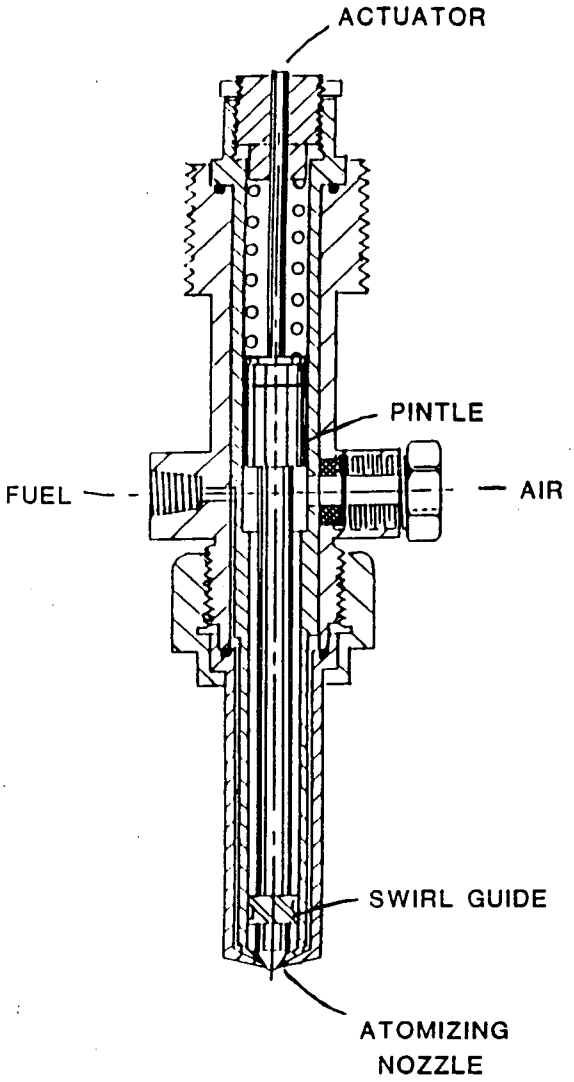

Fig. 10. Pulsed air blast atomizer

of a sequence of vortex nodules that are formed by shear at the boundaries of the jet creating the plume. As a consequence of the vortical circulation concentrated at the nodules, the plume is capable of entraining the surrounding medium into its interior where it gets well mixed with the working substance of the jet. The process of combustion becomes thus consolidated at the center of the spray, annihilating thereby the tendency to form a group combustion mode described in the introduction. Dwelling upon the fundamental principles of this subject is well beyond the scope of this paper. Interested readers are referred for this purpose to the relevant publications (3, 14-16).

Offhand the device is akin to the air-assisted injectors that were widely used in diesel engines before the Second World War, as exemplified by the fuel valves of Busch-Sulzer, McIntosh & Seymour Hesselmann, Nordberg, or Krupp, to mention just a few (17,18). This practice was, in fact, so popular that there was a time when air compressors formed an integral part of diesel engines. It is of interest to note in this connection that one of the most comprehensive books on these engines, whose first edition was published in 1929, emphasized in

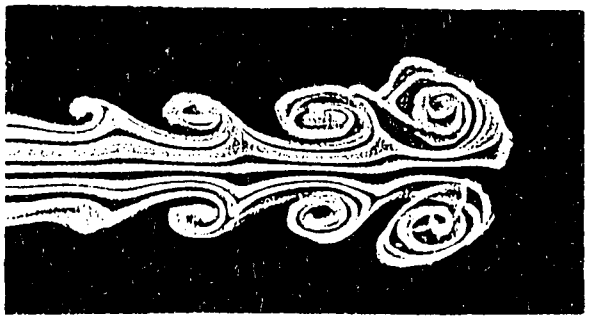

Fig. 11. Turbulent jet plume

the title that its subject matter is concerned exclusively with *Compressor-less Diesel Machines* (19). Paradoxically enough with respect to the present purpose, this technique was abandoned primarily because of the formation of particulates due to the considerable temperature drop of air upon injection into the cylinder, besides the excessive expenditure of work it required for pumping air to the relatively high pressure demanded for this purpose, let alone the concomitant inconvenience associated with the use of air compressors.

Unlike these atomizers, however, the system of Fig. 10 utilizes compressed air not only to execute the process of atomization by shear, in breaking fuel stream into droplets, but also to eject it in the form of aerosols in an air jet that generates a turbulent plume capable of entraining the surrounding hot air to initiate and carry out the exothermic process of combustion. Moreover, by operating on a relatively small pressure drop of air borrowed from the cylinder, as described below, all the drawbacks of the classical air assisted atomizers are, in fact, not only obviated but even advantageously exploited.

Although the fluid mechanic features of the flow field one wishes to establish are quite complex, considering especially its turbulent nature, the engineering aspects are relatively straightforward. The recipe is, in fact, quite simple: upon shearing the liquid sheet into adequately small fuel aerosols, impart upon the carrier air stream sufficient momentum to maximize the circulation in the turbulent shear layer of the plume, but not enough to sweep the eddy nodules downstream, destroying thereby their entrainment capability. From the considerable amount of experience gained with air-blast atomizers, that are today widely used in gas turbines, it appears that the air velocity at the exit of the orifice should be for this purpose of an order of 100-150 m/sec. The corresponding design criteria we have established on this basis call for the Mach number of 0.2-0.3 and, the Reynolds number of 10^4-10^5. Pressure drop across the orifice has to be in this connection of an order of 5% of its downstream level. For a maximum pressure in the cylinder of, say, 62 atm., the injector pressure should not be higher than 65 atm. This can be attained by bleeding 10% to 20% of air from the cylinder just before ignition and, upon passing through a cooling stage, if necessary, compressing it by 5% - a process involving a relatively small change in specific volume. Under such circumstances, injection can be accomplished by an oil activated pressure intensifier with a practically negligible expenditure of work, as illustrated in Fig. 12.

Besides generating fuel aerosols of adequately small

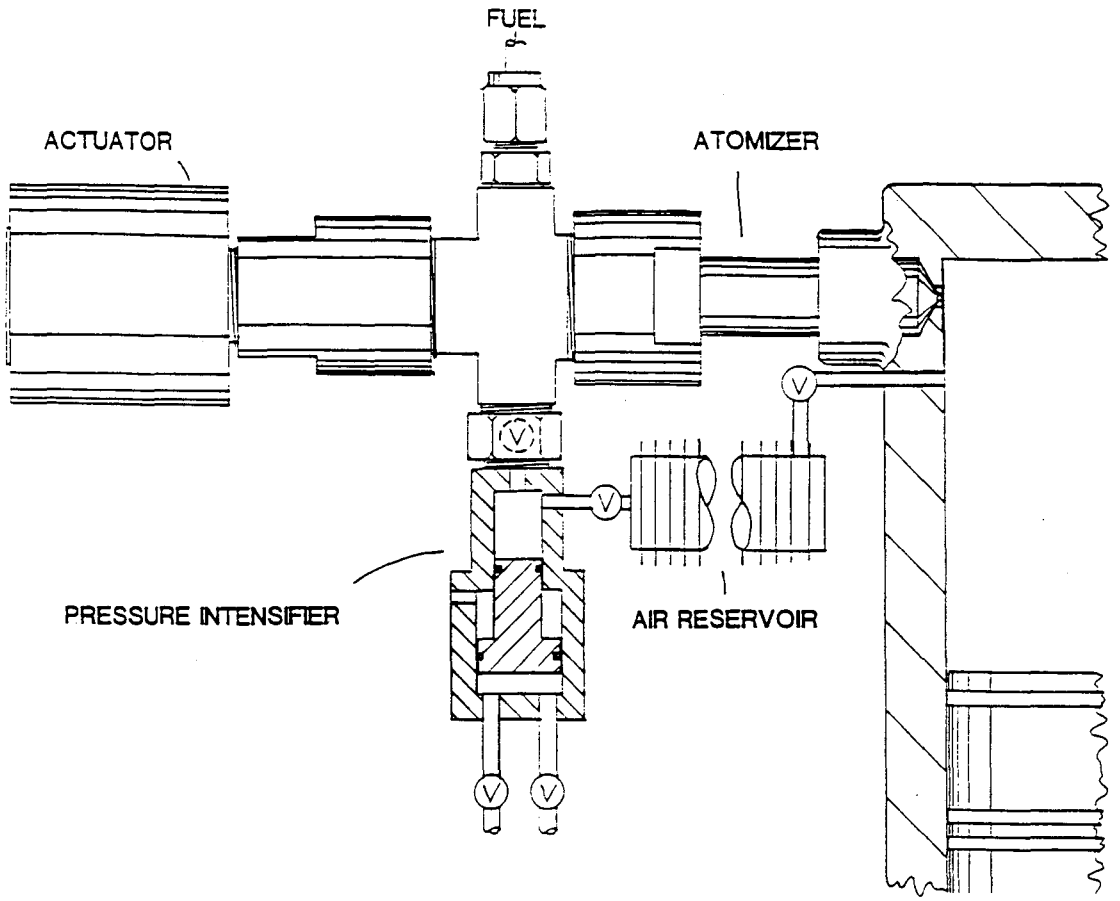

Fig. 12 Air charging system for pulsed air blast atomizer.

droplets, the most critical operating feature of the pulsed air-jet atomizer is a sufficiently rapid discharge to maximize the entrainment due to circulation generated by shear between the jet flow and the essentially stationary, albeit highly turbulent, compressed air in the cylinder. Establishing the design criteria for this purpose has to be left, of course, for future studies.

ENGINE CONCEPT

As pointed out at the outset, injector refinements alone are not sufficient to affect the process of combustion so as to inhibit adequately the generation of particulates and nitric oxides. In order to attain this goal, one has to impair the influence of diffusion flames, the major culprit in this respect, if getting rid of them altogether is deemed impossible. For this purpose operating conditions under which the combustion process takes place have to be also altered, a requirement demanding adoption of a special combustion strategy.

In this connection it should be borne in mind that many of the essential features of diesel engines, such as the remarkable stability and dependability of combustion, endowing them with operational flexibility as well as superb fuel economy, are due to diffusion flames. If the engine is deprived of these flames in order to reduce their detrimental effects, it must be provided with other means of control to render an equivalent service. At the same time temperature peaks have to be maintained at a sufficiently low level and be adequately well distributed throughout the charge to impede the formation of nitric oxide. This implies that dilution of the charge, a factor having a detrimental effect upon one of the most sensitive performance characteristics of the engine, its specific power, should be beneficial in this respect.

The best solution to such seemingly contradictory demands is offered by loop-scavenged, two-stroke engines. Loop scavenging provides the best diluent in the form of recirculated residual gases, and two-stroke operation of the engine is instrumental in boosting up the overall specific power of the system. Progress of combustion is controlled then by employing a set of sequentially activated injectors under the command of a microprocessor that is provided with feedback signals derived from engine performance sensors, such as a pressure transducer system or an endoscope.

An engine concept incorporating such features is displayed in Fig. 13. The particular items to be noted are:

1. four pulsed air-blast atomizers to provide a relatively smooth sequence in multi-staging the process of combustion
2. two sensing elements to provide adequate signals for feedback control executed by the microprocessor
3. plate separating the combustion chamber from the crankcase to keep it sealed
4. non-rocking piston rod with an appropriate mechanism exemplified by the Scotch yoke
5. transfer channel between the bottom and top parts of the cylinder to exploit piston displacement as a supercharger pump

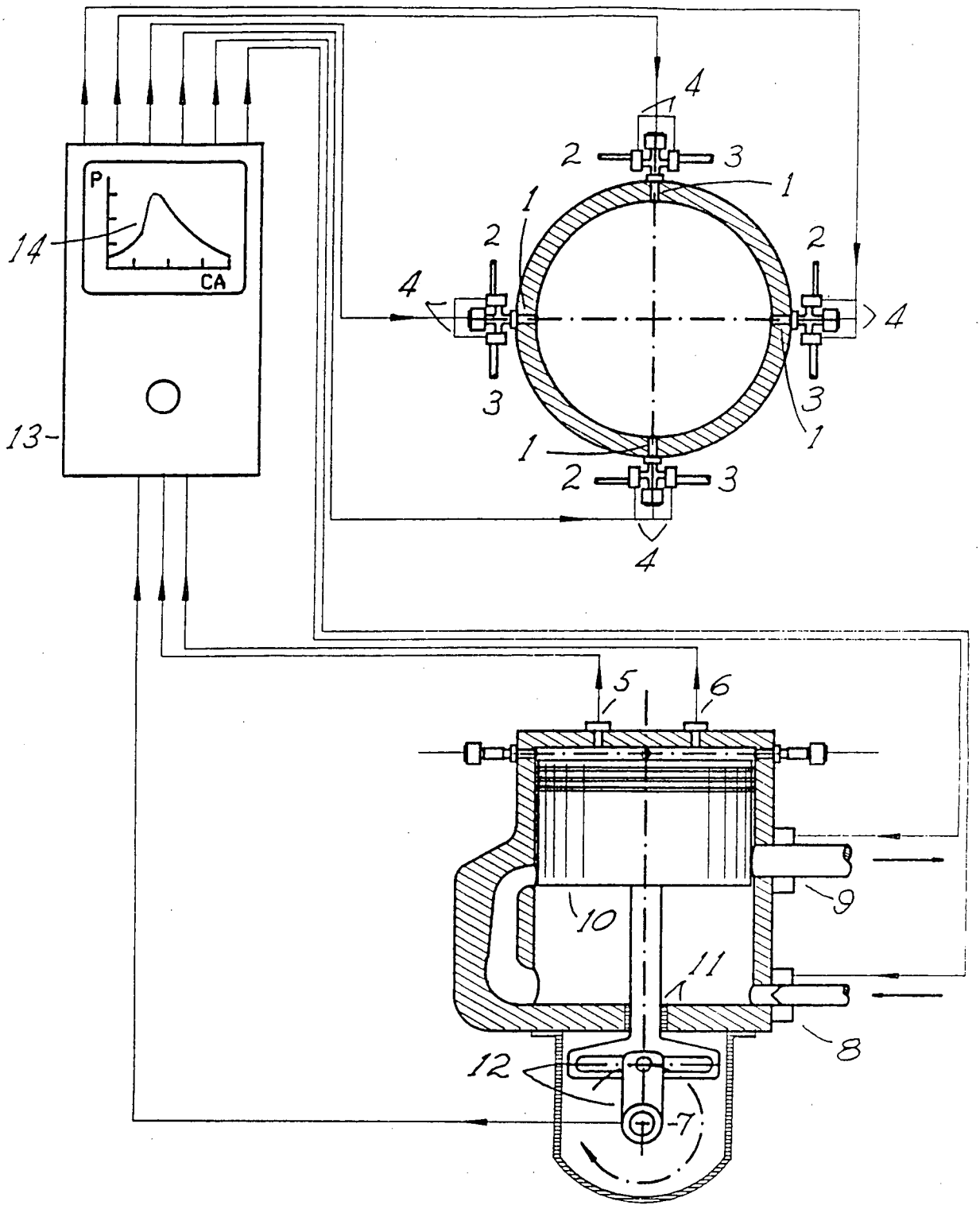

Fig. 13 Engine concept

1-pulsed air blast atomizer, 2-fuel supply line, 3-air supply, 4-control lines 5-primary sensor (e.g. pressure transducer), 6-secondary sensor (e.g. ionization gap, accelerometer, heat transfer gauge, endoscope, etc.), 7-crank angle encoder, 8-inlet air port with check valve (e.g. reed) control, 9-exhaust port with variable geometry control, 10-piston, 11-piston rod bushing in plate separating piston-cylinder enclosure from crankcase, 12-side-thrust-less linkage, 13-microprocessor controller, 14-display of the indicator diagram under control.

Most of these items are, of course, not absolutely necessary. They have been included here only to demonstrate how far one can go in refining the concept.

CONCLUSION

In closing, one should observe that the central theme of the methodology presented here is the exploitation of the large scale vortex structure of the turbulent plume, generated by a pulsed jet of the fuel or fuel-air mixture. The realization of this constructive property of turbulence stems out of one of the major advances made over the recent years in fluid mechanics, perhaps one of the greatest breakthroughs in this field of science (20-26). Taking advantage of it for the benefit of engine technology should be recognized as a particularly noteworthy endeavor.

The paper presents just an exploratory, initial step in this direction. The results it describes are, indeed, quite preliminary in nature, and the designs it depicts are, as yet, purely conceptual in character. It takes, of course, considerably more time and resources to produce a more tangible proof of the pudding than available at this early stage.

ACKNOWLEDGMENT

Work on this paper was supported by the Director, Office of Energy Research, Office of Basic Energy Science, Engineering and Geosciences Division, and the Office of Energy Conversion and Utilization Technologies of the U.S. Department of Energy, under Contract No. DE-AC03-76SF00098, and by the U.S. Army Research Office under Contract No. DAAL03-87-K-0123.

REFERENCES

(1) D. D. Brehob, and D. B. Kittelson, "A Review of CI Engine In-Cylinder Diagnostics for the Investigation of Soot Loading, Chemical Composition, and Temperature," SAE Paper 880515, 13 pp., 1988.

(2) J. B. Heywood, *Internal Combustion Engine Fundamentals*, McGraw-Hill Book Company, New York, i + xxix + 930 pp., 1988.

(3) W. A. Sirignano, "Fuel Droplet Vaporization and Spray Combustion Theory," *Prog. Energy Combust. Sci.*, *9*, 291-322, 1983.

(4) Y. Zhu, G. Hu, X. Wei, and J. Yu, "A Study on a New Combustion System for D.I. Diesel - CSCS System," SAE Paper 880429, 14 pp., 1988.

(5) N. J. Beck, R. L. Barkhimer, W. E. Weseloh, W. P. Johnson, M. A. Calkins, and C. G. Goohs, "High Pressure Fuel Injection - A Rational Approach to Diesel Engine Efficiency, Emissions, and Economics," SAE Paper 830863, 11 pp., 1983.

(6) N. J. Beck, R. L. Barkhimer, M. A. Calkins, W. P. Johnson, and W. E. Weseloh, "Direct Digital Control of Electronic Unit Injectors," SAE Paper 840273, 1984.

(7) N. J. Beck, and O. A. Uyehara, "Factors that Affect BSFC and Emissions for Diesel Engines: Part II Experimental Confirmation of Concepts Presented in Part I," SAE Paper 8170344, 20 pp., 1981.

(8) D. L. Abata, B. J. Stroia, N. J. Beck, and A. R. Roach, "Diesel Engine Flame Photographs with High Pressure Injection," SAE Paper 880298, 11 pp., 1988.

(9) N. J. Beck, O. A. Uyehara, and W. P. Johnson, "The Effect of Fuel Injection on Diesel Combustion," SAE Paper 880299, 28 pp., 1988.

(10) F. Hamady, J. Kosterman, E. Chouinard, C. Somerton, H. Schock, K. Chun, and Y. Hicks, "Stratified Charge Rotary Engine Internal Flow Studies at the MSU Engine Research Laboratory," SAE Paper 890331, 16 pp., 1989.

(11) R. J. Hooker, "Orion - A Gas-Generator Turbocompound Engine," *SAE Transactions*, *65*, 293-330, 1957.

(12) G. Flynn, Jr., "Observations on 25,000 Hours of Free-Piston-Engine Operation," *SAE Transactions*, *65*, 508-515, 1957.

(13) A. H. Lefebvre, *Gas Turbine Combustion*, (esp. Chapter 10), McGraw-Hill Book Co., New York, XVII + 531 pp., 1983.

(14) A. K. Oppenheim, "Dynamic Features of Combustion," *Phil. Trans. Roy. Soc. Lond.*, *A 315*, 471-508, 1985.

(15) A. F. Ghoniem, D. Y. Chen, and A. K. Oppenheim, "Formation and Inflammation of a Turbulent Jet," *AIAA Journal*, *24*, 2, 224-239, 1986.

(16) A. K. Oppenheim, "Quest for Controlled Combustion Engines," SAE Paper 880572, 7 pp., 1988.

(17) C. J. Vogt, *Diesel Engines*, (esp. Chapter II), University of California Press, Berkeley, California, II + 195 pp., 1936.

(18) L. H. Morrison, *American Diesel Engines*, (esp. Chapter III), McGraw-Hill Book Co., New York and London, 2nd edition, X + 489 pp., 1939.

(19) F. Sass, *Bau und Betrieb von Dieselmaschinen*, Springer Verlag, Berlin/Gottingen/Heidelberg, I, VI + 382 pp., 1948, II, X + 475 pp., 1957.

(20) Chorin, A. J., "Numerical Studies of Slightly Viscous Flow," *J. Fluid Mech.*, *57*, 785-796, 1973.

(21) Chorin, A. J., "Vortex Sheet Approximation of Boundary Layers," *J. Comput. Phys.*, *27*, 428-442, 1978.

(22) Ghoniem, A. F., Chorin, A. J., and Oppenheim, A. K., "Numerical Modelling of Turbulent Flow in a Combustion Tunnel," *Phil. Trans. R. Soc. Lond.*, *A 304*, 303-325, 1982.

(23) Chorin, A. J., "Vortex Methods and Turbulence Theory," *Proceedings of the International Congress of Mathematics*, University of California, Berkeley, 1348-1352, 1986.

(24) Chorin, A. J., "Vortices, Turbulence, and Statistical Mechanics," *Vortex Methods* (Editors: K. Gustafson and J. Sethian), SIAM Publication, Philadelphia (in press), 1990.

(25) Ghoniem, A. F. and Krishnan, A., "Flow-Combustion Interactions in a Turbulent Jet," *Dynamics of Reactive Systems*, Progress in Astronautics and Aeronautics, AIAA (in press), 1990.

(26) Ghoniem, A. F., Knio, O. M., and Heidarinejad, G., "The Structure of the Reaction Zone in a Reacting Mixing Layer," *Dynamics of Reactive Systems*, Progress in Astronautics and Aeronautics, AIAA (in press), 1990.

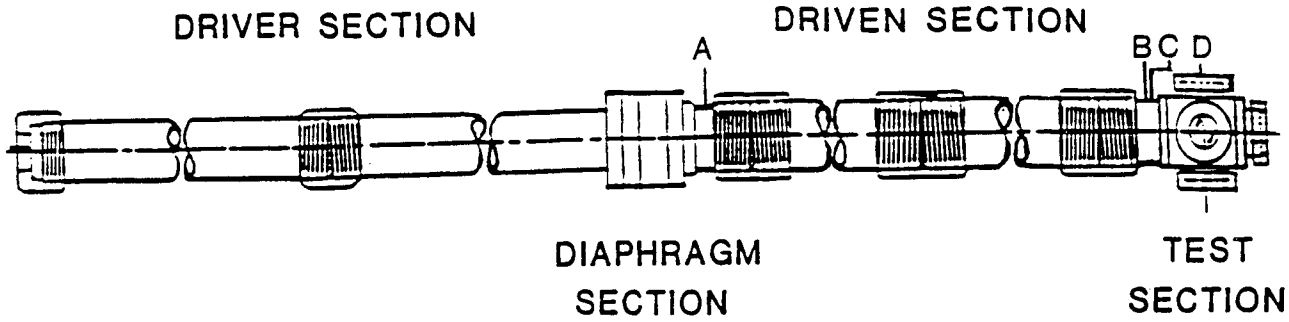

Fig. A Shock tube

APPENDIX

SHOCK TUBE - A shock tube utilizing the reflected wave technique offers service in creating conditions typical of diesel engines under a well controlled set of operating parameters, namely pressure, temperature, and turbulence intensity. It is as a consequence of this capability that a shock tube, designed explicitly for this purpose, has been recently built and installed in our laboratory.

Its essential features are presented in Fig. A. The driver and driven section, each 5 in. in internal diameter and 20 feet long, are joined together by a double diaphragm, pneumatically operated, holder. The test section, equipped with five 2 in. thick windows, each providing an open port 3.5 in. in diameter, is of ~ 4.5 x 4.5 in. square cross-section, so that its area is exactly the same as that of the circular driven section. Fitted between them is a short transition insert whose cross-section is maintained invariant while its shape is transformed gradually from circle to square. In the current test program, the end window frame is used to hold the mount plate for an axially oriented fuel injector. Marked on the drawing are locations of four pressure transducers: (A) to sense the incident shock immediately upon its formation and provide the trigger signal for all the electronically controlled functions of the experimental apparatus, (B) and (C) - a fixed distance apart immediately ahead of the test section - to measure the velocity of the incident shock, and (D) to monitor the transient pressure in the test section.

The operation of the shock tube is as follows:

With two diaphragms, made out of properly grooved and annealed carbon steel or aluminum plates, in place and their holder pneumatically closed, the driven section is filled with air to the prescribed pressure, the intermediate section is filled with gas to a pressure safely below the breaking point of the diaphragms, while the driver section is filled with an appropriate helium-air mixture to the desired initial pressure. To trigger the experiment, the solenoid valve closing the intermediate section is opened, creating a sufficiently large pressure difference across the diaphragm on the driver side to break it. Thereupon the diaphragm on the driven side breaks as well to form a shock front propagating downstream and a rarefaction wave penetrating into the driver section. The shock front reflects from the closed end, creating the desired conditions in terms of pressure, temperature, and turbulence intensity in the test section ahead of the end plate where the injector is mounted to produce an axial jet.

If the initial sound speed in the driver and driven sections is the same, a contact discontinuity between a high temperature air, heated by the shock, and the low temperature gas, cooled by rarefaction, follows the incident front. The reflected shock undergoes therefore a series of interactions with the cold, low density medium it encounters at the contact discontinuity, creating highly disturbed conditions in the test section. To avoid this, the driver section is filled with a helium-air mixture of appropriate composition, so that the local sound speed at the trailing edge of the rarefaction fan matches that of the air compressed by the incident shock. The reflected shock passes then across the contact discontinuity without any interaction. This technique is known as the tailored interface mode of shock tube operation, and that is what we used for all the tests reported here. With the 20 ft. length of the driven and driver sections, the time interval of relatively undisturbed conditions in the test section (except for the turbulence created by the incident shock interacting with the reflected shock) at uniform pressure and temperature is of an order of 20 msec (120° crank angle at a speed of 1000 rpm). Wave interaction processes occurring in the shock tube were calculated by standard techniques of gasdynamics (20)*.

The most outstanding attribute of the shock tube in furnishing service for experimental studies of diesel injectors lies in its ability to provide an unobstructed optical access to the test section for an adequate amount of time to let all the processes of interest take place, with complete freedom for independent adjustment of their initial conditions, the temperature being fixed by pressure ratio across the diaphragm, the pressure - by its overall level in the shock tube, while in principle the turbulence intensity can be adjusted to a certain extent by modifying the amount of interface tailoring, a factor controllable by helium concentration in the driver gas.

* Oppenheim, A. K. *Introduction to Gasdynamics of Explosions*, Springer-Verlag, Wien-New York, VI + 220 pp., 1972.

LAWRENCE BERKELEY LABORATORY
UNIVERSITY OF CALIFORNIA
INFORMATION RESOURCES DEPARTMENT
1 CYCLOTRON ROAD
BERKELEY, CALIFORNIA 94720