UC-411

LBL-28536
Preprint

Lawrence Berkeley Laboratory

UNIVERSITY OF CALIFORNIA

Materials & Chemical Sciences Division

Submitted to Annual Review of Physical Chemistry

Berry's Phase

J.W. Zwanziger, M. Koenig, and A. Pines

February 1990

For Reference

Not to be taken from this room

Prepared for the U.S. Department of Energy under Contract Number DE-AC03-76SF00098.

LBL-28536
Copy 1
Bldg. 50 Library.

DISCLAIMER

This document was prepared as an account of work sponsored by the United States Government. While this document is believed to contain correct information, neither the United States Government nor any agency thereof, nor the Regents of the University of California, nor any of their employees, makes any warranty, express or implied, or assumes any legal responsibility for the accuracy, completeness, or usefulness of any information, apparatus, product, or process disclosed, or represents that its use would not infringe privately owned rights. Reference herein to any specific commercial product, process, or service by its trade name, trademark, manufacturer, or otherwise, does not necessarily constitute or imply its endorsement, recommendation, or favoring by the United States Government or any agency thereof, or the Regents of the University of California. The views and opinions of authors expressed herein do not necessarily state or reflect those of the United States Government or any agency thereof or the Regents of the University of California.

LBL-28536

Berry's Phase

J.W. Zwanziger, M. Koenig, and A. Pines

Department of Chemistry
University of California

and

Materials and Chemical Sciences Division
Lawrence Berkeley Laboratory
University of California
Berkeley, CA 94720

February 1990

This work was supported by the Director, Office of Energy Research,
Office of Basic Energy Sciences, Materials Sciences Division
of the U. S. Department of Energy under Contract No. DE-AC03-76SF00098.

BERRY'S PHASE

Josef W. Zwanziger,[1] *Marianne Koenig,*[2] *and Alexander Pines*

Lawrence Berkeley Laboratory and University of California, Berkeley,
Berkeley, CA 94720

INTRODUCTION 1
A Simple Example: The Born-Oppenheimer Approximation 2
Outline of the Review 5

BERRY'S PHASE AND THE ADIABATIC APPROXIMATION 5
Evolution of Non-Degenerate States 5
A SIMPLE APPLICATION: SPIN-J PARTICLE IN A MAGNETIC FIELD . . . 8
A SECOND APPLICATION: THE $E \otimes e$ JAHN-TELLER EFFECT 10
Evolution of Degenerate States: Wilczek-Zee Gauge Potential 11
Nonadiabatic Corrections 13

GEOMETRIC PHASES AND DIFFERENTIAL GEOMETRY 13

GEOMETRY OF QUANTUM EVOLUTION 19
Unitary Evolution: Aharonov-Anandan Phase 19
Non-Unitary Evolution: Pancharatnam Phase 22

EXPERIMENTAL OBSERVATION OF GEOMETRIC PHASES 24
Adiabatic Phases 24
NON-DEGENERATE SYSTEMS 24
DEGENERATE SYSTEMS 26
Nonadiabatic Phases 28
AHARONOV-ANANDAN PHASE 28
PANCHARATNAM PHASE 28

GEOMETRIC PHASES OUTSIDE SPECTROSCOPY 29

CONCLUSIONS 31

Acknowledgements 32

Literature Cited 32

Figure Captions 45

[1]Address after August 1, 1990: Department of Chemistry, Indiana University, Bloomington, IN 47405.

[2]Present address: E. I. Du Pont de Nemours (Luxembourg) S. A., Contern, Luxembourg.

INTRODUCTION

Berry's phase (1,2) is an example of *holonomy*, the extent to which some variables change when other variables or parameters characterizing a system return to their initial values (3,4). A simple case of classical holonomy is shown in Figure 1; a particle (with a tangent vector indicated by an arrow) moves on the surface of a sphere, beginning and ending at the north pole, in such a way that locally it does not rotate about an axis perpendicular to the surface. As a consequence of this *parallel transport* on the curved surface, however, a rotation can be accumulated when the particle returns to its original position.[1] In a similar way, the state vector of a quantum system can "rotate" as it undergoes a cyclic evolution in state space, thereby accumulating a holonomy.

The most general context for Berry's phase arises from the division of a system (perhaps the universe) into parts; the question is, what can we say about the full system, when a subsystem undergoes a cyclic evolution? Typically one might attempt a solution to the equations of motion, for example the Schrödinger Equation, for the full system; the fact that we can often do better in answering the question by recognizing the role of geometry and topology is a consequence of *gauge symmetry* (6). It is the appreciation of the broad and unifying implications of gauge symmetry, long neglected in some areas of physical chemistry, that constitutes the basis for the remarkable contributions of Berry's phase and its generalizations.

The original premise for Berry's phase is the adiabatic theorem of quantum mechanics (7,8), which deals with a system coupled to a slowly changing environment. If the system Hamiltonian $H(t)$ varies adiabatically, and $|\psi(t)\rangle$ is an associated eigenstate, then, after a cylic evolution of the environment parameters, namely,

$$H(T) = H(0), \qquad 1.$$

the state returns to itself apart from a phase factor:

$$|\psi(T)\rangle = e^{i\alpha}|\psi(0)\rangle. \qquad 2.$$

If H is time-independent and ω is the eigenvalue of $|\psi(t)\rangle$, then $\alpha = \omega T$, and one might therefore conclude for a time-dependent $H(t)$ that $\alpha = \gamma_d$, where

$$\gamma_d = \int_0^T \omega(t)dt = \int_0^T \langle\psi(t)|H(t)|\psi(t)\rangle dt, \qquad 3.$$

the "generalization" of ωT (for the duration of this review we use units in which $\hbar = 1$). What Berry showed (1) was that in addition to the *dynamical phase* γ_d, there is an additional *geometric phase*, independent of time, that is,

[1] A famous example of this type of holonomy involves parallel transport of the plane of oscillation of Foucault's Pendulum (5).

$$\alpha = \gamma_d + \gamma(C) \qquad 4.$$

where

$$\gamma(C) = \oint_C \langle\psi|i\nabla\psi\rangle.d\mathbf{x}. \qquad 5.$$

Whereas γ_d provides information about the duration of the evolution, the non-integrable $\gamma(C)$ tells us something about the geometry of the circuit and about regions of the environment characterizing (for example, enclosed by) the circuit. Roughly speaking, γ_d may be viewed as arising from a local rotation of the state vector, whereas $\gamma(C)$ is the holonomy due to parallel transport around a circuit, in analogy to Figure 1. The geometry of the environment is important in Berry's formulation because geometric and topological features can present obstructions to a global definition of the eigenstate phases. Because of the enormous generality of the geometric approach, it has been applied to a wide variety of physical systems. In this review we describe the geometric phase using examples drawn primarily from spectroscopy. We have also attempted to clarify the analogies between molecular and spin problems, and to mention physical systems perhaps outside of spectroscopy, including classical mechanics, geometric optics, quantum measurement, the Aharonov-Bohm effect, and fractional statistics.

A Simple Example: The Born-Oppenheimer Approximation

Non-integrable phases are known to appear in problems involving the Born-Oppenheimer approximation, in which electronic (system) and nuclear (environment) degrees of freedom are separated (9,10,11,12). The Born-Oppenheimer problem forms a simple example of Berry's phase and we discuss it briefly here in order to motivate the ensuing chapters.

As we recall, in the Born-Oppheimer approximation the electronic problem is solved for each configuration of the nuclei; the positions of the nuclei define a slowly varying environment, which the electrons "follow" adiabatically (13). Surprisingly, this "well-understood" procedure gives rise to apparently anomalous results, especially near electronic degeneracies. One such example is the $E \otimes e$ Jahn-Teller effect. As the name implies, this effect involves the vibronic interaction of a doubly degenerate electronic state (E) with a doubly degenerate vibrational mode (e) (14). The nuclear motion lifts the electronic degeneracy, and in accordance with the theorem of Jahn and Teller (15) one finds distorted nuclear configurations of lower energy than the symmetric state. The simplest molecules subject to the $E \otimes e$ effect are trimers, with an electronic degeneracy at the symmetric, D_{3h} configuration of the nuclei.

The vibronic interaction is most easily expressed in a diabatic basis (13), that is, a basis in which the nuclear kinetic energy operator is diagonal and the inter-electronic state coupling is contained in potential energy terms. Moreover, it is usually

sufficient to truncate an expansion of the Hamiltonian at linear terms in the vibronic coupling (14,16,17), which yields the Hamiltonian

$$H = \left(\frac{P_\rho^2}{2M} + \frac{P_\varphi^2}{2M\rho^2} + \frac{1}{2}M\omega^2\rho^2\right)\mathbf{1} + \begin{bmatrix} 0 & k\rho e^{-i\varphi} \\ k\rho e^{i\varphi} & 0 \end{bmatrix}. \qquad 6.$$

In this equation **1** is the unit matrix, k is the vibronic coupling constant, and ρ and φ are the components (in polar coordinates) of the degenerate vibration, which has effective mass M and frequency ω. The parameter space, with coordinates ρ and φ, is thus a plane. The Born-Oppenheimer procedure is to set the kinetic energy in H equal to zero and diagonalize the remainder, thus yielding the solution of the adiabatic electronic problem as a function of the nuclear configuration. This gives the eigenvalues

$$E_\pm(\rho,\varphi) = \frac{1}{2}M\omega^2\rho^2 \pm k\rho, \qquad 7.$$

yielding two sheets which are degenerate at the origin (the point of zero distortion), as shown in Figure 2. The sheets diverge linearly from the origin, and this point is called a *conical intersection.* Of course, near the origin the adiabatic approximation breaks down, and this point is a singularity of the Born-Oppenheimer procedure. The eigenstates corresponding to $E_\pm(\rho,\varphi)$ are

$$|\eta_+(\rho,\varphi)\rangle = \frac{1}{\sqrt{2}}(e^{-i\varphi/2}|\phi_1\rangle + e^{i\varphi/2}|\phi_2\rangle), \qquad 8.$$

$$|\eta_-(\rho,\varphi)\rangle = \frac{i}{\sqrt{2}}(-e^{-i\varphi/2}|\phi_1\rangle + e^{i\varphi/2}|\phi_2\rangle), \qquad 9.$$

in terms of the original electronic basis $\{|\phi_1\rangle, |\phi_2\rangle\}$. The functions $|\eta_\pm(\rho,\varphi)\rangle$ are double-valued in the angle φ. Thus, a circuit in the space of nuclear configuration parameters, which encircles the origin, as in Figure 3, induces a sign change in the electronic eigenstates. Such a sign-change is the simplest example of a non-trivial holonomy: cyclic evolution of the parameters of the Hamiltonian (the positions of the nuclei) induces a change in the eigenstates (the electronic eigenstates). The sign-change in the state of a two-level (fermionic) system under a 2π rotation, the so-called "spinor behavior", was of course known in the early days of quantum mechanics (18, 19,20,21), but we shall see that Berry's formulation provides a new insight into the sign-change as a special case of the geometric phase.

The double-valued eigenstates of Equations 8 and 9 may appear disturbing and unphysical. Note, however, that the eigenstate that must be single-valued in this case is that of the total molecular system (22), of which the electronic term is only one factor. In general any multi-valuedness of the system is compensated by a corresponding multi-valuedness in the environment. Alternatively, the eigenstates $|\eta_\pm(\rho,\varphi)\rangle$ may be rendered single-valued by an appropriate gauge transformation, for example,

$|\eta_\pm\rangle \rightarrow \exp(i\varphi/2)|\eta_\pm\rangle$. As always, the cost of such a transformation is to add a vector potential, an example of a *gauge potential*, to the Hamiltonian (23). Gauge potentials in the context of the Born-Oppenheimer approximation have recently been discussed in detail by Pacher et al (24). In the present case the gauge transformation requires the replacement in the nuclear kinetic energy operator $\nabla \rightarrow \nabla - i(-\hat{e}_\varphi/2\rho)$. Such a vector potential gives rise to a "fictitious" magnetic field (a flux tube) confined to the origin ($B = \delta(\rho)/2$), and so the $E \otimes e$ system may be regarded as an analog of the Aharonov-Bohm effect (25). Indeed, Mead has dubbed this the Molecular Aharonov-Bohm effect (26). As in the Aharonov-Bohm effect, the eigenstates acquire a phase γ from the vector potential, in the form

$$\gamma(C) = \oint_C \frac{-1}{2\rho}\rho d\varphi = -\pi, \qquad 10.$$

where C is a circuit followed by the nuclear configurations and encircling the origin. The sign-change of the eigenstates now appears as a consequence of the vector potential.

To conclude this example we remark that the double-valued nature of the electronic states, whether explicit, as in Equations 8 and 9, or implicitly contained in a vector potential, gives rise to an observable phenomenon. The circuit in φ that induces the sign change is provided by the natural motion of the nuclei. In a low energy wave packet, localized on the lower surface shown in Figure 2, the nuclei execute the pseudo-rotation shown in Figure 3. In terms of the angle φ such a motion is nothing other than a rotation by 2π. Thus the nuclear motion is quantized on the lower surface of Figure 2 with the boundary condition that the angular part of its eigenstate change sign as $\varphi \rightarrow \varphi + 2\pi$, in order that the total eigenstate be single-valued. Since the angular part of the vibrational eigenstate is just $\exp(im\varphi)$, where m is the pseudo-rotation angular momentum, m must be half-odd-integral to satisfy the proper boundary condition. Motion on the lower surface of Figure 2 looks like a radial oscillation and a free rotation, and so the low-lying energy levels include the rotational energy $m^2/2M\rho_0^2$, where ρ_0 is the equilibrium distortion amplitude. The boundary condition satisfied by half-odd-integral m gives rise to an energy spectrum different from the usual case of integral rotational quantization (27,28,29).

The phenomenon of geometric phases near conical intersections is quite general (11,30). Mathematically it comes about from the degeneracy or "collision" of eigenvalues of a matrix (in this case a real symmetric 2×2 matrix) as functions of parameters (31,32,33,34,35). Not surprisingly, therefore, interesting phases and geometries in molecular systems are not limited to vibronic problems; they occur also in coupling between rotational degrees of freedom (36,37,38) and rotation-vibration coupling (39,40,41,42). In general, degeneracies of eigenvalues act as topological and geometric sources of non-integrable phase. As we shall see, more general and abstract cycles involving shape changes and permutations, for example

$$\begin{tikzcd} & \text{REPHASE} \arrow[dl] & \\ \text{RESHAPE} \arrow[rr] & & \text{SHAPERE} \arrow[ul] \end{tikzcd}$$

also fall within the framework of geometric phases.

Outline of the Review

We begin by discussing the work of Berry, in the context of the adiabatic theorem, and its application to two simple systems: spins in time-varying magnetic fields, and the Jahn-Teller problem discussed briefly above. Particularly interesting is the unified view of these two seemingly different problems provided by Berry's framework. We then describe the generalization of geometric phases to the adiabatic transport of degenerate states (43) and to nonadiabatic corrections (44). Berry's phase is then re-interpreted by means of the more abstract formulation due to Simon, which views the gauge potential as a connection on a fiber bundle (2). A further important generalization of Berry's phase is due to Aharonov and Anandan (45), and we outline their treatment of cyclic evolutions and geometric phases in projective (density operator) space. We then describe a few experimental tests, illustrating some of the phenomena that can be appreciated in terms of geometric phases. Finally we give a brief overview of the impact of Berry's phase on fields other than spectroscopy, and conclude with a summary and some comments on future directions.

We have tried to include complete references throughout, but it is inevitable that some have been overlooked, and for this we apologize in advance. Some of the main papers on geometric phases in physics have been collected in a recent book (together with an overview of the subject) (4). Some elementary introductions to geometric phases have appeared (5,46,47), as well as some more technical reviews (48,49,50,51, 52).

BERRY'S PHASE AND THE ADIABATIC APPROXIMATION

Evolution of Non-Degenerate States

Following Berry, let us consider a Hamiltonian which depends on at least two real parameters $(x_1, x_2, \ldots) \equiv \mathbf{x}$ that vary slowly with time. At each instant t we define a (smoothly varying) basis of eigenstates $\{|\eta_m(t)\rangle\}$ for H by

$$H(\mathbf{x}(t))\,|\eta_m(\mathbf{x}(t))\rangle = \omega_m(\mathbf{x}(t))\,|\eta_m(\mathbf{x}(t))\rangle. \qquad 11.$$

According to the adiabatic approximation (53), if the system is initially described by $|\eta_m(\mathbf{x}(0))\rangle$, then, since transitions to other eigenstates may be neglected, the system will be in the state $|\eta_m(\mathbf{x}(t))\rangle$ at some time t later (see Kato (54) and Messiah (7) for a rigorous formulation).

The ket $|\eta_m(\mathbf{x}(t))\rangle$ specifies the state at time t only up to a phase. The question of interest is, how will the phase of the state at time t be related to the phase of the initial state, $|\eta_m(\mathbf{x}(0))\rangle$? The standard prescription for the phase is a simple generalization of the time-independent case, made by replacing the eigenfrequency ω_m with its time integral. This procedure is correct if the arbitrary phase of the basis $\{|\eta_m(\mathbf{x})\rangle\}$ is chosen appropriately; Schiff (8) shows that the necessary choice is equivalent to the requirement

$$\langle \eta_m(\mathbf{x}(t)) \, | d\eta_m(\mathbf{x}(t))/dt \rangle = 0. \qquad 12.$$

This condition can be met at any specified time, but, as Berry realized, it cannot always be met simultaneously over the whole parameter space, a point which is missed in conventional presentations of the adiabatic theorem. The problem of defining globally the phase of $\{|\eta_m(\mathbf{x})\rangle\}$ suggests the existence of a phase factor which is induced by the geometry of parameter space, rather than the dynamics of the evolution. In order to study this possibility, Berry considered a cyclic evolution of the parameters, that is, a cycle of duration T in the space of parameters. In this case the initial and final eigenspaces are the same, and comparing the phases of $|\eta_m(\mathbf{x}(0))\rangle$ and $|\eta_m(\mathbf{x}(T))\rangle$ is a well-posed problem. Berry proposed that the final eigenstate takes the form

$$|\eta_m(T)\rangle = e^{-i\int_0^T \omega_m(t)dt} e^{i\gamma_m(C)} |\eta_m(0)\rangle, \qquad 13.$$

where C is the path followed by the parameters. The dynamical phase is $\int_0^T \omega_m(t)dt$, and the additional geometric phase is $\gamma_m(C)$. Inserting this ansatz into the Schrödinger Equation yields

$$\gamma_m(C) = \oint_C \mathbf{A}.d\mathbf{x}, \qquad 14.$$

where

$$\mathbf{A} = \langle \eta_m(\mathbf{x}) | i\nabla_{\mathbf{x}} \eta_m(\mathbf{x}) \rangle; \qquad 15.$$

the gradient is taken with respect to the parameters. This derivation assumes the basis $\{|\eta(\mathbf{x})\rangle\}$ to be single-valued. Equation 14 and 15 shows that Berry's phase depends only on the initial eigenstate and the path C. The normalization of $|\eta_m(\mathbf{x})\rangle$ ensures that $\gamma_m(C)$ is real. Furthermore, if the parameter space is *simply connected* and $|\eta_m(\mathbf{x})\rangle$ can be smoothly chosen to be everywhere real, then $\gamma_m(C)$ is zero. Equation 14 is satisfying because it involves exactly the matrix element that causes the standard interpretation of the adiabatic theorem to break down, Equation 12. This

form for the Berry phase has also been derived from a path-integral formulation (55, 56).

The relevance of $\gamma(C)$ to the physics of the adiabatically evolving system can be appreciated if $\exp i\gamma(C)$ is removed by a gauge transformation, thereby introducing the vector potential $\mathbf{A} = \langle \eta_m | i\nabla_{\mathbf{x}} \eta_m \rangle$ into the Hamiltonian. A system with a non-zero Berry's phase may thus be viewed as evolving under an effective Hamiltonian, in which the replacement

$$\nabla \rightarrow \nabla - i\langle \eta_m | i\nabla_{\mathbf{x}} \eta_m \rangle = \nabla - i\mathbf{A} \qquad 16.$$

has been made. Such a transformation makes the phase look entirely dynamical, but because the transformation cannot be defined globally, it still retains its geometric character (57,58). Such a gauge potential is *Abelian*, just like the familiar case of electromagnetic interactions; it differs in that it is defined in the abstract space of parameters, but its effect is just as observable. As with other gauge potentials, this "Berry gauge potential" arises due to a fundamental ambiguity in the description of the system. In this case the ambiguity reflects the variety of ways that the eigenstate phases can be chosen. In general, an ambiguity in assigning relative coordinates exists whenever a problem is separated into two parts, for example a system and an environment.

Although the geometric phase $\gamma(C)$ is gauge-invariant, as it must be, the integrand (the vector potential) is of course not gauge-invariant. It is easy, however, to develop a completely gauge-invariant formula for the case of a three-dimensional parameter space, using elementary vector calculus. This is quite an important special case, as it includes the parametrization of the orientation of a system with respect to an external laboratory reference frame. Using Stokes' Theorem the line integral in Equation 14 may be rewritten as the flux of a vector field $\mathbf{V}_m(\mathbf{x})$ through a surface S bounded by C, as depicted in Figure 4:

$$\gamma_m(C) = \iint_S \mathbf{V}_m(\mathbf{x}).d\mathbf{S}, \qquad 17.$$

where

$$\mathbf{V}_m(\mathbf{x}) = i\sum_{k\neq j} \frac{\langle \eta_m(\mathbf{x}) | \nabla_{\mathbf{x}} H(\mathbf{x}) | \eta_k(\mathbf{x}) \rangle \times \langle \eta_k(\mathbf{x}) | \nabla_{\mathbf{x}} H(\mathbf{x}) | \eta_m(\mathbf{x}) \rangle}{[\omega_k(\mathbf{x}) - \omega_m(\mathbf{x})]^2}. \qquad 18.$$

This formula assumes that the spectrum of H is completely non-degenerate on the surface of integration, a point discussed by Mead and Truhlar in their early paper (12) in which an infinitesimal version of Equation 18 is derived. The field $\mathbf{V}_m$ is illustrated in a numerical study by Mondragon and Berry (59). In the next chapter we outline the use of differential forms to provide a coordinate-free generalization of Equation 18 to parameter spaces of arbitrary dimension.

A SIMPLE APPLICATION: SPIN-J PARTICLE IN A MAGNETIC FIELD In order to clearly demonstrate the content of these rather abstract equations, Berry applied them to a simple example, that of a spin-J particle in a slowly moving magnetic field (1,60). This problem can also be solved exactly, and so provides a particularly physical interpretation of the adiabatic arguments underlying the geometric phase (61,62).[2]

We consider a magnetic field $\mathbf{B}$, of constant magnitude B and slowly varying direction (θ, φ). The Hamiltonian is

$$H(\theta,\varphi) = \omega_0 \frac{\mathbf{B}(\theta,\varphi)}{B}.\mathbf{J}, \qquad 19.$$

where $\mathbf{J}$ is the spin angular momentum of the particle and ω_0 is the Larmor frequency. The parameters θ and φ specify the orientation of $\mathbf{B}$ in the laboratory frame. Parameter space is thus the two-sphere S^2. The form for $H(\theta,\varphi)$ which is both convenient for calculations and explicitly shows the parameteric dependence is

$$H(\theta,\varphi) = \omega_0 e^{-i\varphi(t)J_z} e^{-i\theta(t)J_y} J_z e^{i\theta(t)J_y} e^{i\varphi(t)J_z}. \qquad 20.$$

The instantaneous eigenstates of $H(\theta,\varphi)$ can be written in terms of the eigenstates of J_z, denoted by $|m\rangle$, as

$$|\eta_m\rangle = e^{-i\varphi(J_z - m)} e^{-i\theta J_y} |m\rangle; \qquad 21.$$

the corresponding eigenvalues are $m\omega_0$. With the factor of $\exp im\varphi$ included in the definition of $|\eta_m\rangle$, the vector potential is singular only at the south pole.

For this case the vector field $\mathbf{V}_m(\mathbf{x})$ is easy to calculate and is given by

$$\mathbf{V}_m = \nabla \times \mathbf{A} = -m\frac{\mathbf{B}}{B^3}. \qquad 22.$$

The geometric phase is obtained from an application of Stokes' Theorem:

$$\gamma_m(C) = \oint_C \mathbf{A}.d\mathbf{x} = \iint_S \mathbf{V}_m.d\mathbf{S}. \qquad 23.$$

Inserting $\mathbf{V}_m$ from Equation 22 into Equation 23, $\gamma_m(C)$ is evaluated as

$$\gamma_m(C) = -m \iint_S \sin\theta \, d\theta \, d\varphi = -m\Omega(C), \qquad 24.$$

where $\Omega(C)$ is the solid angle subtended by C at the origin in parameter space, and S is a surface bounded by C. Two remarks are in order here. First, since the phase $\gamma_m(C) = -m\Omega(C)$ depends only on the solid angle subtended by the circuit, it is invariant to deformations of the circuit which preserve $\Omega(C)$. Thus circuits with very different shapes give rise to the same geometric phase; examples of some useful circuits are shown in Figure 5. The particular case of the "figure-8" circuit in Figure 5

[2]We refer the reader to (63,64,65,66,67) for analytic solutions to other model problems.

encloses no (oriented) area, and thus has zero Berry's phase. Secondly, Equation 22 shows that the vector field may be thought of as radiating from an effective *magnetic monopole* of strength m at the origin in parameter space (68,69). The result for $\gamma_m(C)$ is like an Aharonov-Bohm phase accumulated by a particle of unit charge due to the monopole flux enclosed by the circuit. Mathematically the monopole is a consequence of the degeneracy of eigenvalues of a Hermitian 2×2 matrix.

The forms for $\mathbf{V}_m$ and $\gamma_m(C)$ (Equations 22 and 24) are more general than this example might suggest. Mathematically, the key feature is that as a function of the parameters the eigenvalues diverge linearly from one another at an isolated point of degeneracy, here the origin of parameter space, where $B = 0$. Near such isolated points the geometric phases of eigenstates of *any* Hamiltonian will be given by a solid-angle formula like Equation 24. The vector field giving rise to the phase will always have the form of Equation 22, though the vector $\mathbf{B}$ will be replaced by some other vector of parameters. The point of degeneracy has special significance in the geometric treatment; it appears as a monopole, and is in a sense the source of phase. It is extraordinary that the degeneracy profoundly affects adiabatic eigenstates that are far away, a feature again reminiscent of the Aharonov-Bohm effect.

We now compare the adiabatic calculation, performed above, to an exact analysis for the simplest possible case of a conical circuit of the magnetic field. Assume that $\mathbf{B}$ traces out a cone of apex angle $2\theta_0$, at angular frequency ω, so that $\theta(t) = \theta_0$ and $\varphi(t) = \omega t$, where $\omega \ll \omega_0$ to ensure adiabaticity. We then calculate the evolution of a state $|\eta_m\rangle$, given by Equation 21. The dynamical phase in Equation 13 is just $\exp(-im\omega_0 T)$, where T is the time taken to traverse the circuit. The solid angle subtended by this circuit at the origin is $2\pi(1 - \cos\theta_0)$, so the geometric phase is $\exp[-im2\pi(1 - \cos\theta_0)]$, and Equation 13 becomes

$$|\eta_m(T)\rangle = e^{-im\omega_0 T} e^{-im2\pi(1-\cos\theta_0)} |\eta_m(0)\rangle. \qquad 25.$$

On the other hand, we can solve the Schrödinger Equation for this system, by going into a frame rotating with the magnetic field (70). This yields the exact solution:

$$|\psi_m(T)\rangle = e^{-i\omega T J_z} e^{-i\theta J_y} e^{-i[\omega_0 J_z - \omega(J_z \cos\theta_0 - J_x \sin\theta_0)]T} |m\rangle. \qquad 26.$$

In order to compare this result with that of Equation 25, we impose the adiabatic limit by evaluating Equation 26 with first-order perturbation theory; in both cases we neglect terms that cause transitions out of the initial eigenspace. Thus, we drop terms that do not commute with $\omega_0 J_z$:

$$\omega_0 J_z - \omega(J_z \cos\theta_0 - J_x \sin\theta_0) \approx J_z(\omega_0 - \omega\cos\theta_0). \qquad 27.$$

We have, at $T = 2\pi/\omega$,

$$\begin{aligned} |\psi_m(T)\rangle &\approx e^{-2\pi i J_z} e^{-i\theta_0 J_y} e^{-iJ_z(\omega_0 - \omega\cos\theta_0)T} |m\rangle \\ &= e^{-im\omega_0 T} e^{-im2\pi(1-\cos\theta_0)} |\eta_m(0)\rangle, \end{aligned} \qquad 28.$$

which is indeed the same result as Equation 25.

It is worth noting several special cases of these results. First, let $m = 1/2$ and $\theta_0 = \pi$. The magnetic field then traces over the equator of a sphere, and the eigenstate acquires a geometric phase of -1, i.e., the spinor sign change. This is reminiscent of the Jahn-Teller effect discussed in the introduction, and we will come back to it below. If, instead, $m = 1$, the geometric phase is $+1$. These are the usual results for a *fermion* ($m = 1/2$) and a *boson* ($m = 1$) under a 2π rotation (18). Berry also considered, however, the boson case, $m = 1$, with $\theta_0 = \pi/3$. Here the geometric phase is -1, and again the eigenstate changes sign (1). This is a surprising result, which reminds us that in this problem the important geometry is connected with the parameter space, here just the surface of a sphere, and not the usual fermion, boson statistics. The occurence of phase factors different from ± 1 gives rise to the possibility of "fractional statistics" (71,72).

A SECOND APPLICATION: THE $E \otimes e$ JAHN-TELLER EFFECT We conclude this chapter by reconsidering the system sketched in the introduction, the $E \otimes e$ Jahn-Teller effect. Geometric phases in this problem have been treated from several points of view (29,73). Higher dimensional Jahn-Teller systems have been studied as well (74, 75).

In order to calculate the geometric phase for this problem we use Equation 14. The transformation to a surface integral is not valid here, because in this problem any surface bounded by a circuit which surrounds the degeneracy necessarily includes the degeneracy itself, and the vector field $\mathbf{V}_m(\mathbf{x})$ is undefined there. To evaluate the integrand in Equation 14, we must use a single-valued basis, as noted previously. As in the introduction we make the basis defined in Equations 8 and 9 single-valued by multiplying by $\exp(i\varphi/2)$. With this basis the integrand in Equation 14 is evaluated as $-\hat{e}_\varphi/2\rho$; naturally we recover the vector potential of the introduction. The geometric phase is then

$$\gamma_\pm(C) = -\int_0^{2\pi} d\varphi/2 = -\pi. \qquad 29.$$

The phase factor is again -1. We see that with eigenstates taken explicitly single-valued, Berry's phase imposes a sign-change and hence double-valued behavior.

Alternatively we can arrive at the same conclusion by considering the $E \otimes e$ problem to be a special case of a full three-dimensional problem, for example, the spin-1/2 in a magnetic field but with the field confined to the x-y plane. Equation 23 can then be used, as one may use the third dimension (the z-axis) to integrate over a surface which does not contain the origin. The difference in these points of view, mathematically, is the following. Treating the problem strictly in two dimensions demands a topological interpretation of the sign-change, because in this case it arises from the multiply connected nature of the parameter space, here the plane with the origin

removed (3). Using the freedom of a third dimension endows the sign-change with a geometric character, because in such a case the parameter space surrounds the origin, and so is simply connected, but by deviating from the plane it becomes curved.

The geometric point of view has thus illuminated a similarity between a problem in molecular spectroscopy and a spin in a magnetic field. Both the $E \otimes e$ problem and the spin-1/2 particle in magnetic field confined to a plane are described by real symmetric 2×2 matrices; it is the geometry of this family of matrices that is at the root of the similar behavior of these two systems. The magnetic field can be thought of as representing the semiclassical limit of localized packet of nuclear configurations. The molecular case can be generalized to three dimensions, by using molecules with nuclear configurations having higher symmetry, thereby constituting an analogy to the full problem of spin-1/2 in a magnetic field. Furthermore, analogies to spin greater than 1/2 are possible; for example the triply degenerate electronic state of a $T \otimes (t \oplus e)$ system (14) is related to a spin-1 in combined magnetic and electric quadrupole fields.

Evolution of Degenerate States: Wilczek-Zee Gauge Potential

Up to this point we have been concerned with non-degenerate states undergoing adiabatic evolution. Following Berry's work, Wilczek and Zee (43) showed how the theory can be generalized to include the evolution of degenerate states, that is, transport of sets of states that are degenerate at all points of a circuit.

When there is an n-fold degeneracy, the phase factor of the non-degenerate case, $\exp i\gamma(C)$, is generalized to an $n \times n$ unitary matrix, a *non-Abelian* holonomy. Let us look at this in more detail. We recall that, for a non-degenerate level $|\eta\rangle$ of a Hamiltonian parametrized by x_μ, Equation 13 can be written

$$|\eta(T)\rangle = e^{-i\int_0^T \omega(t)dt} U(C)|\eta(0)\rangle, \qquad 30.$$

where from Equation 14

$$U(C) = \exp\left(i \oint_C \mathbf{A}.d\mathbf{x}\right), \qquad 31.$$

and the components of $\mathbf{A}$ are

$$A_\mu = \langle\eta|i\frac{\partial}{\partial x_\mu}|\eta\rangle. \qquad 32.$$

The geometric phase factor is just $U(C)$, an Abelian transformation. If now the eigenstate associated with the eigenfrequency ω is part of an n-fold degenerate set, all n states must be considered simultaneously. Equation 32 becomes a matrix equation, and we obtain:

$$|\eta_a(T)\rangle = e^{-i\int_0^T \omega(t)dt} \sum_{b=1}^{n} U_{ab}(C)|\eta_b(0)\rangle, \qquad 33.$$

where now

$$U_{ab}(C) = \mathcal{P}\exp\left(i\oint_C \mathbf{A}_{ab}.d\mathbf{x}\right), \qquad 34.$$

and

$$A_{ab,\mu} = \langle\eta_a|i\frac{\partial}{\partial x_\mu}|\eta_b\rangle. \qquad 35.$$

The path-ordering operator $\mathcal{P}$ is necessary here, because $\mathbf{A}$ does not commute with itself at different point on the circuit—the gauge potential is non-Abelian; such a potential is called a $U(n)$ gauge potential. No analog of Stokes' Theorem exists for this case, so the phase change cannot be related to some simple gauge-invariant quantity such as as the solid angle subtended by the circuit in parameter space, except for infinitesimal circuits in which the local behavior is essentially Abelian (76). The non-Abelian gauge potential could be explored cleanly by using circuits like the figure-8 shown in Figure 5; as mentioned previously, such a circuit encloses no net (oriented) area and hence phases arising from Abelian potentials will vanish, but non-Abelian holonomies will not. An important physical consequence of non-Abelian holonomies is that not only may each degenerate state acquire a phase change, but population transfers among the different degenerate levels are possible as well. An example of a Hamiltonian with degeneracies described by the Wilczek-Zee gauge is given by a spin-J quadrupole with non-integer $J > 1/2$ in zero magnetic field (77,78), described by the Hamiltonian (79)

$$H(\theta,\varphi,\psi,\eta) = \omega_Q \mathbf{J}.\frac{\mathbf{Q}(\theta,\varphi,\psi,\eta)}{Q}.\mathbf{J}; \qquad 36.$$

this system is discussed in the next chapter.

While $U(n)$ gauge potentials may exist in any system described by a slowly varying Hamiltonian with degenerate eigenstates, the non-Abelian character of these transformations does not always manifest itself. In certain cases, the gauge potential is diagonalizable at all points of the circuit in parameter space by the same change of basis. In such cases $\mathbf{A}$ commutes with itself at all times, and hence the degenerate levels do not mix: only phase changes, not population changes, can arise. The situation is thus equivalent to n non-degenerate levels, each independently acquiring a normal (Abelian) Berry's phase. Such a gauge potential arises, for example, in problems for which the parameter space is the two-sphere but the circuit chosen is a cone (77,80). The gauge potential will be Abelian for *any* circuit if A has no matrix elements between the degenerate states. This occurs, for example, in optics experiments (81) where the helicity ($m = \pm 1$) states have $\Delta m = 2$ and the gauge potential (arising from rotations in three-dimensional space) is comprised of angular momentum operators which only have non-zero matrix elements between states with $\Delta m = 1$ (61).

Nonadiabatic Corrections

The theory described to this point is relevant to eigenstates undergoing adiabatic evolution. Real processes, however, are rarely adiabatic, and so it is quite important to extend the theory to the nonadiabatic case. Aharonov and Anandan (45) have shown that there is a geometric phase for any cyclic evolution, independent of the driving Hamiltonian; we take up their work in a later chapter. Here we note that Berry (44) and others (82,83,84,85) have incorporated nonadiabatic corrections to the adiabatic phase. The corrections form a series which is asymptotic (44) to the true quantum mechanical evolution, though it diverges in general. An interesting related development is the discovery of a geometric component of the nonadiabatic transition *amplitude* in a two state system (86,87,88), which may be called a *geometric amplitude.* It would be interesting to provide an experimental measurement of this effect. More generally, the geometric phase in the case of deviations from adiabatic evolution can be treated as a non-Abelian problem (Y. Aharonov, private communication).

GEOMETRIC PHASES AND DIFFERENTIAL GEOMETRY

This chapter presents briefly the abstract treatment of geometric phases, in the language of differential geometry (76,89,90), an approach that provides the mathematical structure underlying the formulae derived in the previous chapter. Following Simon (2), we show here that the natural way to formulate the results of Berry in a gauge-invariant way is to cast them in terms of fiber bundles and structures defined on the bundles. This permits us to use techniques from geometry and topology to analyze these systems, and to derive general results concerning questions of existence and uniqueness of the phase and invariant quantities. We consider again the case of a non-degenerate eigenstate of a Hamiltonian that depends on several slowly varying parameters. At each point $\mathbf{x}$ of the parameter space the eigenstate is defined, up to a phase, by Equation 11. The phase is just a complex number of modulus one. An instantaneous eigenstate is therefore completely specified by the pair $(\mathbf{x}, \exp i\varphi)$; Simon's essential insight (2) was to recognize that the set of such pairs comprises a *principal fiber bundle.* We digress here to give a very brief description of fiber bundles; for a popular introduction see (91), and for more a rigorous approach, see (3,76,92,93).

Fiber bundles appear routinely in differential geometry, and are useful for describing manifolds which look locally like the direct product of two simple spaces, but have complicated global geometry. A principal fiber bundle, depicted schematically in Figure 6, consists of several elements: a manifold M, called the base space, a manifold E, called the bundle space, the typical fiber G, which is a Lie group and hence also a manifold, and a map π from E to M. The direct product condition means that

locally we have $E = M \times G$. As a simple example of a fiber bundle, imagine a strip of paper with the ends glued together. Take as the base space one edge of the strip, i.e., a circle, and as the fiber a line segment whose length equals the width of the strip. By attaching a copy of the fiber (the line segment) to each point of the base space, we can make a cylinder. We can also glue the ends of the strip together with a twist, however, and obtain a Möbius strip. Locally, the Möbius strip looks like the cylinder, and this is reflected in the direct product condition of the bundle construction. Globally they are very different, and this difference can be incorporated into the fiber bundle construction, by pasting together the local pieces appropriately. Incidentally, the Möbius strip is the construction appropriate to the spinor behavior of a two-level system described in the previous chapter.

We return now to the problem of adiabatic evolution; following Simon we observe that the relevant bundle has as base space M the space of parameters $\{\mathbf{x}\}$, and has as fiber G the set of phase factors, which is just the group $U(1)$. Eigenstates, described as noted by $(\mathbf{x}, \exp i\varphi)$, exist in the bundle space, and the time evolution of an eigenstate is represented by a path in the bundle space E. We would like to construct this path from knowledge of the trajectory followed by the parameters in the base space, since the parameters are the experimentally controllable quantities. A path in the base space is uniquely lifted to a path in the bundle space by means of a *connection*; such a lift is shown in Figure 6. Many different connections can be defined, resulting in different bundle paths, but only one is compatible with adiabatic evolution, and it is called the *adiabatic connection* (2); this is the connection that lifts the base space path to the bundle space path which represents adiabatic evolution of the eigenstates (94). We denote the connection one-form by A, already anticipating that it is a generalization of the vector potential $\mathbf{A}$ from the previous chapter.

A connection provides a unique way to lift a base space path to a bundle path, but more generally it endows a bundle with a notion of parallelism. Because the tangent space of a bundle and the bundle itself typically do not coincide, there is no way to compare vectors at different points of the bundle. A connection remedies this situation, as it provides a unique way to decompose a vector tangent to the bundle into a vector tangent to the fiber and this vector's "orthogonal complement". These component vectors are called, respectively, vertical and horizontal. It is important to recognize that the notion of orthogonality is particular to the connection chosen. The connection acts on a base space path by smoothly mapping it to a bundle path, whose tangent vectors are purely horizontal. Such a map allows points on different fibers to be compared, using the concept of parallelism provided by the connection. Thus, a connection is also called a rule for parallel transport of vectors in a bundle.

In the physical case of adiabatic evolution a ket must evolve with no transitions to other states. This is enforced by requiring that $\langle\eta(t)|\eta(t+\delta t)\rangle = 1 + \mathcal{O}((\delta t)^2)$, or, expanding, $\langle\eta|\dot{\eta}\rangle = 0$. We have parameterized the path in the base space by the time t. By writing $\langle\eta|\dot{\eta}\rangle = 0$ in terms of local coordinates of the bundle, $|\eta\rangle = \exp(i\phi)|\tilde{\psi}(\mathbf{x})\rangle$,

where ϕ is the fiber coordinate and $|\tilde{\psi}(\mathbf{x})\rangle$ is a single-valued bundle coordinate (a special case of this was used in writing down Equation 21), we obtain the equation of parallel transport:

$$\frac{d\phi}{dt} = \sum_{\mu} \left\langle \tilde{\psi} \middle| i \frac{\partial \tilde{\psi}}{\partial x_\mu} \right\rangle \frac{dx^\mu}{dt}, \qquad 37.$$

which uses the components of the connection one-form A,

$$A = \langle \tilde{\psi} | i\, d\tilde{\psi} \rangle = \sum_{\mu} \langle \tilde{\psi} | i\, \partial \tilde{\psi} / \partial x_\mu \rangle dx^\mu. \qquad 38.$$

Solutions to Equation 37 yield parallel transported vectors $|\eta\rangle$, that is, the vectors that evolve adiabatically. The connection one-form A is equivalent to the gauge potential derived previously. By using the adiabatic connection, Equation 38, and the parallel transport equation, Equation 37, a path in the base space is correctly lifted into the bundle. Various properties of the connection one-form A can be deduced from the symmetries under which the Hamiltonian is invariant (95,96). If the symmetry group is the rotation group, the connection can even be interpreted classically (97,98,99).

We now show that the connection one-form A may in fact be identified with the vector potential $\mathbf{A}$ of Equation 15. Consider changing the coordinates of the bundle by changing only the coordinates of the fiber by a translation h, that is, $g' = hg$ where g is an element of the fiber. In the case of adiabatic evolution the fiber is $\exp i\phi$, so this translation is just a gauge transformation. Such a change of bundle coordinates changes the connection one-form as follows (3):

$$A' = hdh^{-1} + hAh^{-1}. \qquad 39.$$

In other words, the components of A transform like those of a gauge potential. This observation helps make contact between the abstract geometric picture and the more physical derivations of the previous chapter.

Having defined the appropriate fiber bundle and connection, we complete our geometric discussion of Berry's phase by showing that it is the holonomy of the adiabatic connection in the bundle, as shown in Figure 6. Consider a closed path C in the base space of the fiber bundle. The connection one-form A will in general lift this path to a (perhaps open) path in the bundle, which begins and ends on the same fiber. Since the fiber is a group there will exist an element of the fiber which maps the starting point of the bundle path to the ending point. This element is a holonomy, and the set of holonomies themselves form a group (the holonomy group) which is a subgroup of the fiber. In the case of a $U(1)$ fiber the holonomy corresponding to the path C may be written as $\exp[i\gamma(C)]$. This is nothing other than the difference in phase between the initial and final eigenstate, and so the holonomy is indeed Berry's phase.

The holonomy can be compactly expressed in terms of the connection one-form A as

$$\exp[i\gamma(C)] = \exp\left(i \oint_C A\right), \tag{40.}$$

or in terms of the curvature two-form Ω, using Stokes' Theorem,

$$\exp[i\gamma(C)] = \exp\left(i \int_S dA\right) = \exp\left(i \int_S \Omega\right), \tag{41.}$$

where S is a surface in the base space bounded by C. The form Ω is the exterior derivative of the connection one-form, $\Omega = dA$, and is gauge-invariant. For a non-Abelian connection (gauge potential) the formula for the holonomy generalizes to

$$U(C) = \mathcal{P}\exp\left(i \oint_C A\right), \tag{42.}$$

where the path-ordering operator $\mathcal{P}$ has been used because A here is a matrix-valued one-form. The formula cannot be simplified in general by any Stokes-like theorem, but a curvature two-form still exists and is given by $\Omega = dA + A \wedge A$, where $\wedge$ denotes the wedge product (3,100); the curvature is useful for calculating invariants of the bundle, as we mention below. Derivations of the holonomy, which exploit invariance properties of the Hamiltonian, have been given by Anandan and Stodolsky (101) and Jordan (102,103).

For the purpose of calculations it is convenient to express Ω in coordinates of the fiber bundle. This is done by differentiating Equation 38:

$$\Omega = i\langle d\tilde{\psi}| \wedge |d\tilde{\psi}\rangle = i \sum_{\mu<\nu} \left\langle \frac{\partial\tilde{\psi}}{\partial x_\mu} \middle| \frac{\partial\tilde{\psi}}{\partial x_\nu} \right\rangle dx^\mu \wedge dx^\nu, \tag{43.}$$

We see that Ω is the generalization of $\mathbf{V}_j$ (Equation 18) to parameter spaces of arbitrary dimension. A formula of this type for Ω was obtained by Avron et al (104,105) in a study of topological invariants arising in the quantum Hall effect. A completely coordinate-based derivation of the formula for the holonomy in terms of the curvature is given by Dandoloff and Zakrzewski (106).

The connection A provides a way to compute the holonomy for a given path in a bundle. Bundles can also be characterized without reference to a specific path, by using characteristic classes (3,92). The characteristic classes relevant to the adiabatic eigenstate bundles are called Chern classes. These classes are polynomials of the curvature Ω, and are invariants of the bundle in the sense that the classes are invariants of the fiber group G and do not depend on the connection. Integrating the Chern classes over the base space of a bundle provides a set of integers, called Chern numbers. Non-zero Chern numbers reveal the existence of obstructions to a global description of a given bundle as a direct product, and therefore provide useful information about the bundle without having to calculate holonomies for various paths. The fundamental result is that non-zero Chern numbers for a bundle guarantees the existence of circuits with non-trivial holonomy. Chern numbers have therefore been

interpreted as topological quantum numbers (78,107,108). The question of existence of non-zero holonomies has also been addressed by Kiritsis (109), from an algebraic point of view.

We now briefly reexamine the two examples of the previous chapter. Consider first the problem of a spin in a magnetic field. Using the states (choice of gauge) $|\eta_m\rangle$ defined in Equation 21, we obtain the connection one-form (gauge potential) A as

$$A_\varphi = \langle\eta_m|i\frac{\partial}{\partial\varphi}|\eta_m\rangle d\varphi = -m(1-\cos\theta)d\varphi, \qquad 44.$$

$$A_\theta = \langle\eta_m|i\frac{\partial}{\partial\theta}|\eta_m\rangle d\theta = 0. \qquad 45.$$

The curvature is easily calculated:

$$\Omega = dA = d[-m(1-\cos\theta)]d\varphi = -m\sin\theta\, d\theta \wedge d\varphi, \qquad 46.$$

and from this the holonomy and Berry's phase are obtained. In order to characterize the bundle, rather than particular paths, recall that for the spin in a field the parameter space was S^2, the surface of a sphere, and each eigenstate could acquire a complex phase, giving a $U(1)$ bundle over S^2. This particular bundle is the one that represents magnetic monopole (110,111). The Chern numbers for the spin in a field system have been calculated by Avron et al (78).

The $E \otimes e$ Jahn-Teller system is simpler than the spin problem discussed above. Because the parameter space is a plane minus the origin, the base space of the bundle is the circle S^1. The fiber consists of two points, and the phase can be just $+1$ or -1; we speak of a Z_2 bundle over S^1, precisely the bundle that describes the edges of the Möbius strip. The curvature

$$\Omega = dA = d(-d\varphi/2) = 0 \qquad 47.$$

is zero so the connection is "flat" and Chern numbers cannot be used to describe the bundle. Technically the phase change in this case is a monodromy (112,113), rather than a holonomy, but holonomy is used to encompass both terms. As we saw in the previous chapter the geometric phase can be regarded as a holonomy if the circle S^1 is considered to be on the surface of S^2 (monopole), rather than in the punctured plane $R^2 - \{0\}$ (flux line). All Chern numbers for the Z_2 bundle over S^1 are zero, since the curvature is zero, but the Z_2 bundle can be classified by Stiefel-Whitney numbers (78,109,113). Finally, we note that a non-degenerate electronic state of a molecule with n degrees of freedom, in the Born-Oppenheimer description, is described by a $U(1)$ bundle over E^n, where E^n is an n-dimensional Euclidean space. As in the $E \otimes e$ case the adiabatic connection on this bundle is flat, but here there are no degeneracies and thus no obstruction to a global definition of the phases of the eigenstate basis. The holonomy for any path in this case is thus zero, that is, Berry's phase is zero.

Systems with global degeneracies are described by generalized monopoles (114). Consider the generalization of the Hamiltonian for a spin in a magentic field,

$$H = \omega_0 \frac{\mathbf{B}(\theta,\varphi)}{B}.\mathbf{J}, \qquad 48.$$

to a quadrupole in an electric field gradient,

$$H = \omega_Q \mathbf{J}.\frac{\mathbf{Q}(\theta,\varphi,\psi,\eta)}{Q}.\mathbf{J}, \qquad 49.$$

where ω_Q is the quadrupole coupling constant and $\mathbf{Q}$ is the quadrupole interaction tensor, represented by a traceless, real symmetric 3×3 matrix. We have normalized the quadrupole tensor so that it depends on four parameters: three Euler angles, θ, φ, ψ, that specify its orientation, and η, the asymmetry parameter (79). Zee (77) and Avron et al (78) have analyzed the quadrupole Hamiltonian in detail; the half-odd-integral spin $\mathbf{J}$ case, for which the energy levels come in degenerate pairs (because of time-reversal symmetry) for all values of the parameters, contains all the essential features of the non-Abelian connection. The non-Abelian phase in this case is an element of $SU(2)$, and the bundle is an $SU(2)$ bundle over the four-sphere S^4; for the spin-3/2 case the adiabatic connection on such a bundle is equivalent to a classical instanton (78,114,115,116,117). Following Zee, we now calculate the connection for the case of an axially symmetric quadrupole ($\eta = 0$); the parameters are then two Euler angles, and we use the gauge of Equation 21. For the $m = \pm 1/2$ pair we calculate, from Equation 35, in terms of the Pauli matrices,

$$A_{\pm 1/2,\varphi} = \left[(-1+\cos\theta)\frac{\sigma_3}{2} - (J+1/2)\sin\theta\left(\cos\varphi\frac{\sigma_1}{2} - \sin\varphi\frac{\sigma_2}{2}\right)\right] d\varphi, \qquad 50.$$

$$A_{\pm 1/2,\theta} = (J+1/2)\left(\cos\varphi\frac{\sigma_2}{2} + \sin\varphi\frac{\sigma_1}{2}\right) d\theta. \qquad 51.$$

For the $|m| \neq 1/2$ pairs the connection is Abelian

$$A_{mm',\varphi} = -m(1-\cos\theta)\delta_{mm'} d\varphi, \qquad 52.$$

$$A_{mm',\theta} = 0, \qquad 53.$$

reducing of course to Equations 44 and 45. Due to the selection rules imposed by rotations, the $m = \pm 1/2$ states can be mixed, but the other m states only acquire Abelian phases. In a spin-5/2, therefore, the ($\pm 1/2 \leftrightarrow \pm 3/2$) transitions would show non-Abelian behavior, but effects on the ($\pm 3/2 \leftrightarrow \pm 5/2$) transitions would be Abelian. If we allow more general parameter changes, such as varying the asymmetry parameter of the quadrupole, coupling between other pairs of m states are possible. We can also calculate the curvature, given the connection A, but for non-Abelian connections it is not helpful in determining the holonomy, except for infinitesimal circuits; we refer the reader to (77,78) for a discussion of the curvature for the quadrupole Hamiltonian.

GEOMETRY OF QUANTUM EVOLUTION

Unitary Evolution: Aharonov-Anandan Phase

The theory we have reviewed so far describes the geometry of adiabatic evolution. A significant extension of Berry's theory has come from Aharonov and Anandan (45, 118), who showed that quantum mechanical evolution itself may be viewed geometrically, without regard to any parameter space. The relevant topological features and curvature giving rise to geometric phases are those of state space, rather than parameter space. A clear exposition of the Aharonov-Anandan (AA) phase has been given by Bouchiat and Gibbons (119).

Rather than considering a Hamiltonian that depends on parameters, let us consider the density operators ρ as the fundamental objects of study. Consider a circuit in the space of pure-state density operators $\rho = |\psi\rangle\langle\psi|$, called the *projective space* (113), i.e.,

$$\rho(T) = \rho(0), \tag{54.}$$

and therefore

$$|\psi(T)\rangle = e^{i\alpha}|\psi(0)\rangle, \tag{55.}$$

where T the duration of the circuit. Aharonov and Anandan showed that there exists a geometric phase dependent only on the circuit in projective space and independent of the Hamiltonian.

The projective space of density operators is the base space of a fiber bundle; the group of phases α of the state vector at each point makes up the fiber. A vector tangent to the bundle is then written $d|\psi\rangle/dt$. The usual inner product on Hilbert space provides a way to split this vector into a horizontal and a vertical component, as follows (120,121):

$$\frac{d}{dt}|\psi\rangle = \left(\frac{d}{dt}|\psi\rangle - |\psi\rangle\langle\psi|\frac{d}{dt}|\psi\rangle\right) + |\psi\rangle\langle\psi|\frac{d}{dt}|\psi\rangle. \tag{56.}$$

This equation shows that the acquired phase of the state vector can be factored into a dynamical part, due to the vertical component, and a geometric part, due to the horizontal component. The dynamical part can be removed, defining the Aharonov-Anandan (AA) geometric phase $\beta(C)$ by

$$\beta(C) = \alpha + \int_0^T \langle\psi(t)|H(t)|\psi(t)\rangle dt. \tag{57.}$$

This can be written in terms of a closed curve of single-valued $|\tilde{\psi}\rangle$ in the bundle that projects to C (the circuit of ρ in projective space):

$$\beta(C) = \oint_C \langle\tilde{\psi}|i\,d\tilde{\psi}\rangle, \qquad 58.$$

where $\langle\tilde{\psi}|i\,d\tilde{\psi}\rangle$ is the connection one-form. Clearly, $\beta(C)$ is again a consequence of geometry, and is not dependent on $|\psi\rangle$ being the eigenstate of an adiabatically varying Hamiltonian—indeed $H(t)$ can vary in a manner that is both ***non-adiabatic*** and ***non-cyclic***. In the adiabatic limit where $|\psi(t)\rangle$ is an eigenstate of $H(t)$ (i.e., $|\psi\rangle\langle\psi|$ is an eigenoperator of the Liouvillian) and the evolution is adiabatic, the AA phase reduces to Berry's phase. An extension of the AA formulation is useful when the evolution is not Hamiltonian, for example in changes of ρ due to a sequence of projections. We shall briefly mention such circuits in the next section.

That $\beta(C)$ is gauge-invariant can be seen by making the gauge transformation

$$|\tilde{\psi}(t)\rangle \rightarrow e^{i\,f(t)}|\tilde{\psi}(t)\rangle, \qquad 59.$$

which gives, substituting Equation 59 into Equation 58,

$$\beta(C) = \oint_C \langle\tilde{\psi}|i\,d\tilde{\psi}\rangle - [f(T) - f(0)], \qquad 60.$$

which reduces to Equation 58 because $f(T) = f(0)$ for single-valued $|\tilde{\psi}\rangle$. In fact $\beta(C)$ can be written entirely in terms of objects defined in the gauge-invariant projective space (78,122):

$$\beta(C) = \int_S \mathrm{Tr}\rho\, d\rho \wedge d\rho \qquad 61.$$

where $\mathrm{Tr}\rho\, d\rho \wedge d\rho$ is the curvature two-form of projective space.

The density operator for a two-level system furnishes a simple example of a non-trivial AA phase. The space of density operators in this case may be represented by a polarization vector $\mathbf{p}$ (with $0 \leq p \leq 1$) in three dimensions (123), because a general density operator ρ can be written

$$\rho = \frac{1}{2}(1 + \mathbf{p}.\sigma), \qquad 62.$$

where σ is the vector of Pauli matrices, so the subset of pure states ($p = 1$) is the two-sphere S^2. Again we have a $U(1)$ bundle over S^2, and it is easy to show that the AA phase in this case is half the solid angle that the circuit subtends at the origin of projective space. Figure 4, which shows the enclosed flux from the curvature two-form arising from a monopole, is thus relevant to the AA phase as well as to Berry's phase, except that in the AA case both the circuit and the monopole are in projective state space.

The difference between Berry's phase and the AA point of view can be illustrated by the simple example of a spin-1/2 undergoing one cycle of rotation in the x-y plane (a circuit of $\mathbf{p}$ in Equation 62 in the x-y plane). Of the family of magnetic field trajectories (Hamiltonians) that can induce such an evolution two examples are:

(a) Adiabatic evolution, in which **B** rotates slowly in the x-y plane with **p** following adiabatically;

(b) Precession, in which **B** is constant along the z–axis and **p** undergoes one cycle of precession in the x-y plane.

For *both* of these cases the geometry of evolution of the spin state is the same and so the AA phase is

$$\beta(C) = \pm\pi, \qquad 63.$$

and the spinor sign-change is therefore geometric whether the spin 2π rotation occurs by adiabatic transport or by precession. From the point of Berry's phase, (a) gives the same geometric phase of $\pm\pi$. For (b), however, **B** is constant and there is therefore a null circuit in parameter space; the spin state must be regarded as a superposition of eigenstates (along z) which accumulate *dynamical* $\pm\pi$ phases and sign changes.

Because the AA phase is defined with respect to evolution of the density operator it cannot be measured in a closed system—if the density operator undergoes a cyclic evolution so do all observables of the system. Thus measurements of $\beta(C)$ are made on cyclic systems which are embedded in, and form part of, a complete system, for example by interferometry where one of the beams undergoes a cyclic evolution whose consequence is measured by interference with the second, reference beam. Berry's phase, on the other hand, is defined with respect to cyclic changes of the Hamiltonian and therefore can manifest itself in differences between the phases in a superposition of eigenstates of the system itself (62,99).

The AA phase has been treated theoretically in a number of ways. Page (124) has given a completely geometric treatment, Cheng and Fung (125) have discussed the relationship between Berry's phase and the AA phase, and Layton et al (126) have derived a formula for the AA phase of an arbitrary spin in a magnetic field. An explicit calculation of the AA phase for a three-level (spin-1) system (where the projective space is the four parameter CP^2) has been carried out by Bouchiat and Gibbons (119); this has been extended by Bouchiat (127) to spins in combined magnetic fields and electric field gradients. There have also been extensions of the AA phase to mixed state density matrices, by working with complex solid angles (128,129). Kuratsuji has derived the phase from a path integral formulation (130), and Anandan has shown how the AA phase generalizes to the non-Abelian case of degenerate states (where the degeneracy is in the density operator, not necessarily the Hamiltonian) (131), for which the base space is a Grassmann manifold (3). Attempts have been made to study the geometry of an even more general space, that of the algebra of bounded operators in the relevant Hilbert space (this includes the space of density matrices as a subset) (132,133,134). Recently Ralston (135,136) has discussed the geometry of quantum evolution using the symplectic symmetries arising from a classical picture.

Non-Unitary Evolution: Pancharatnam Phase

We close this chapter by noting some early work by Pancharatnam, which involves geometric phases associated with non-unitary evolution (137). Detailed discussions of the connection between the Pancharatnam phase and the adiabiabatic phase have been presented (121,138,139,140,141,142,143). Consider two states $|\psi_1\rangle$ and $|\psi_2\rangle$, not necessarily "close together"; for example, $|\psi_2\rangle$ might be obtained from $|\psi_1\rangle$ by means of some projection or filtering. Pancharatnam argued that a natural way to compare the phases of $|\psi_1\rangle$ and $|\psi_2\rangle$ is by means of the inner product (the "natural connection"): $\langle\psi_1|\psi_2\rangle = r \exp i\alpha$. The vectors $|\psi_1\rangle$ and $|\psi_2\rangle$ are said to be *in phase* or *parallel* if $\alpha = 0$, so $\langle\psi_1|\psi_2\rangle$ is real. Indeed, Samuel and Bhandari point out that $|\psi_1\rangle$ and $|\psi_2\rangle$ are parallel, if $|\psi_2\rangle$ is obtained from $|\psi_1\rangle$ (aside from any non-unitary "shrinkage") by transport of the associated density operator along a geodesic in the projective space; this is the Pancharatnam connection (121). As pointed out by Berry (139), in the limit of unitary evolution the Pancharatnam connection reduces to the adiabatic connection.

As an example of the Pancharatnam phase consider a sequence of (perhaps quantum) filtering measurements on spin-1/2 particles. A beam of particles originally polarized along z with initial state vector $|z\rangle$, is split into a reference channel and a second beam. The second beam enters a Stern-Gerlach apparatus oriented along x and splits into two orthogonal components ($|x\rangle$ and $|\bar{x}\rangle$)

$$|\psi_{\text{initial}}\rangle = |z\rangle = |x\rangle\langle x|z\rangle + |\bar{x}\rangle\langle\bar{x}|z\rangle. \qquad 64.$$

The $|\bar{x}\rangle$ component is discarded, leaving the filtered component $|x\rangle\langle x|z\rangle$ which is in phase or "parallel" with the original state $|z\rangle$ ($\langle z|x\rangle\langle x|z\rangle = 1/2$ is real). Thus the filtering or projection from $|z\rangle$ to $|x\rangle$ is consistent with parallel transport (together with a "shrinkage" by 1/2 and ignoring any dynamical phases) along a geodesic from z to x of the type shown in Figure 1. Following the geometry of geodesic connections in Figure 1, the beam now enters a Stern-Gerlach apparatus oriented along y (in which the $|\bar{y}\rangle$ component is discarded) and finally a Stern-Gerlach apparatus oriented along z (in which the $|\bar{z}\rangle$ component is discarded). The final beam has the same polarization as the original beam (and 1/8 the intensity) and its state is given by

$$|\psi_{\text{final}}\rangle = |z'\rangle\langle z'|y\rangle\langle y|x\rangle\langle x|z\rangle. \qquad 65.$$

Although $|z\rangle$ is in phase with $|x\rangle$, $|x\rangle$ is in phase with $|y\rangle$, and $|y\rangle$ is in phase with $|z'\rangle$, it is clear that $|z'\rangle$ and $|z\rangle$ are not in phase; they differ (neglecting dynamical phases) by an Abelian holonomy

$$|z'\rangle = e^{i\gamma(C)}|z\rangle \qquad 66.$$

where

$$\gamma(C) = -\frac{1}{2}\Omega(C) = -\frac{\pi}{4}. \qquad 67.$$

The Pancharatnam phase is just Berry's phase $\gamma(C)$ for the geodesic triangle (with $\Omega(C) = \pi/2$) and it can be measured by interference with the original beam (whose phase is on record in the reference channel). Experiments of this type have been done in optics by using polarizers and can be interpreted purely classically—it would be most interesting to extend them to quantum measurements on photons using coincidence techniques of the type developed by Grangier et al (144). The limit of a continuous (densely spaced circuit) of quantum filtering measurements is equivalent to unitary evolution along the circuit (145,146), and in this limit the Pancharatnam phase reduces to the AA phase.

A Stern-Gerlach apparatus provides a *complete measurement* of the spin state of a particle, that is, it determines the values of a complete set of commuting operators $(\mathbf{J}^2, \mathbf{J}.\mathbf{B})$. Anandan and Pines have considered the case of *incomplete measurement*, the determination of expectation values for an incomplete set of commuting operators, for example measurement of $\mathbf{J}^2$ and $\mathbf{J}.\mathbf{Q}.\mathbf{J}$ for a quadrupole system (122). This can be accomplished by using a Stern-Gerlach-like apparatus with an inhomogeneous electric field gradient instead of the usual inhomogeneous magnetic field. For example, for the case of $J = 3/2$, we would find two degenerate sets $|m| = 3/2, 1/2$ instead of four non-degenerate components $m = -3/2, -1/2, 1/2, 3/2$ because of time-reversal symmetry (78). The consequence of a cyclic sequence of incomplete measurements with quadrupole Stern-Gerlach devices at different orientations is a non-Abelian holonomy, described by means of a non-Abelian connection in a bundle consisting of $U(2)$ fibers over geodesics on a Grassmann manifold (3). The higher symmetry gauge group (and the associated Wilczek-Zee gauge potential) results from the further ambiguity of the incomplete measurement. In general, we see that non-Abelian connections appear in the evolution of density operators having degenerate eigenvalues (147).

EXPERIMENTAL OBSERVATION OF GEOMETRIC PHASES

In this section we review some experiments that illustrate geometric phases. The section is organized in an order similar to the contents of the previous chapters: adiabatic phases in non-degenerate and degenerate systems, and geometric phases of both the AA and Pancharatnam types.

Adiabatic Phases

NON-DEGENERATE SYSTEMS We begin with two experiments that illustrate the canonical example of a spin in a slowly reorienting magnetic field; experiments in a

similar vein have been proposed to probe the interaction of few-level quantum systems with light (148,149,150,151,152,153).

Bitter and Dubbers (154,155) studied a beam of spin polarized neutrons passing through a helically wound coil. In a frame moving with the neutrons the spin couples to a rotating magnetic field orthogonal to the beam direction. An additional static field in the direction of flight is applied, to give a total field which sweeps out a cone of some specifiable apex angle. The condition of adiabaticity is $2\pi/T \ll \omega_0$, where T is the time of flight, and ω_0 the Larmor frequency. The phase acquired by the spins is measured by neutron spin rotation and can be written as $\Phi = \omega_0 T + \Delta\gamma$. The first term is the dynamical phase, and the second comes from Berry's phase (actually the difference of Berry phases for the two components of the neutron spin state). Determining Φ as a function of B yields measurements of $\Delta\gamma$, which is equal to the solid angle swept out by the magnetic field. Berry's phase for neutrons was also determined by Richardson et al using stored spin-polarized ultracold neutrons in the presence of time-varying magnetic fields (156).

A similar example, motivated by the work of Cina (99) and Moody et al (157), was studied by Suter et al (61) using high resolution NMR spectroscopy. In standard NMR experiments a spin is immersed in a large static magnetic field B_0 in the z direction, and transitions between the resulting Zeeman levels are driven by a small, orthogonal radio-frequency field B_1 of magnitude ω_1 rotating at frequency $\omega_{\rm rf}$. The frequency $\omega_{\rm rf}$ is chosen to satisfy a resonance condition ($\omega_{\rm rf} = \omega_0$, where ω_0 is the Larmor frequency) so the transition is manifestly non-adiabatic, but in a frame rotating at frequency ω_0 around B_0 the effective magnetic field to which the spins couple is just B_1, which is static in this frame. Suter et al altered this picture by going off resonance, so $\omega_{\rm rf} \neq \omega_0$, and by centering their phase sensitive detector on a third frequency $\omega_{\rm d}$. In a frame rotating at angular frequency $\omega_{\rm d}$ about B_0 the effective field $B_{\rm eff}$ has magnitude $\omega_{\rm eff} = [(\omega_0 - \omega_{\rm d})^2 + \omega_1^2]^{1/2}$, and makes an angle $\theta = \arctan[\omega_1/(\omega_0 - \omega_{\rm d})]$ with the z axis. The effective field is not static in this frame; it precesses about the z axis at an angular frequency $\delta = \omega_{\rm d} - \omega_{\rm rf}$. The spins thus couple to a field which traces out a cone of apex angle 2θ. Adiabaticity is ensured by choosing δ such that it is small compared to the spin precession frequency, that is, $\delta \ll \omega_0$. With δ chosen in this way $B_{\rm eff}$ defines a slowly varying quantization axis. The phase of the NMR signal acquired in this experiment can be separated into a dynamical component, namely $\omega_0 T$, where T is the time during which B_1 is applied, and a geometric part. In this experiment too one measures a coherent superposition of eigenstates, and thus detects a difference of Berry phases, namely $\exp[i\Delta m\Omega(C)]$. The geometric phase difference is found to be equal to the solid angle $\Omega(C)$ swept out by $B_{\rm eff}$, in quantitative agreement with theory. As pointed out in this work, and by Bouchiat (62), dynamical phases in such magnetic field experiments can be removed by means of spin echoes. In this work the effects of deviations from adiabatic behavior are also discussed briefly.

We turn now to experiments in optics. Geometric phases for light can be under-

stood by regarding the evolution as a parallel transport of the polarization of photons, which have spin-1. A representation of the density operator for a general photon state is a 3×3 matrix (158,159,160); in the helicity ($m = \pm 1, 0$) representation, the $m = 0$ state is of course unoccupied, so only the 2×2 polarization submatrix, Equation 62, is non-zero. There are two basic types of experiments. The first involves circuits of $\mathbf{k}$, the momentum vector (direction of propagation, characterized by angles θ, φ), and the second involves circuits of $\mathbf{p}$, the light polarization vector (characterized by angles α, β), with $\mathbf{k}$ remaining constant. Both types of circuits (and combinations) are conveniently explained by a spin-1 (3×3) formalism (M. V. Berry and A. Pines, unpublished). Adiabatic circuits of $\mathbf{k}$ can be implemented by passing light through a helically twisted optical fiber (81,161,162,163), and non-adiabatic circuits by reflections from mirrors (164,165,166).[3] This is equivalent to evolution of the (full 3×3) density operator according to a unitary transformation $R(t)$, a rotation in real three dimensional space ($SO(3)$), so that $\mathbf{k}(t) = R(t)\mathbf{k}(0)$. Although the $m = \pm 1$ states involved are degenerate, the adiabatic connection involves angular momentum operators that cannot couple states with $\Delta m = 2$, so the geometric phase is Abelian. The geometric phase is thus $-m\Omega(C)$, where $m = \pm 1$ for the helicity states and $\Omega(C)$ is the solid angle swept out by $\mathbf{k}(t)$. The photons thus display their full spin-1 (boson) behavior. The bundle is that of Figure 1, the tangent bundle over S^2, and the monopole of Figure 4 is at the origin of $\mathbf{k}$ space. Analogous experiments with phonons in twisted beams have been suggested by Igarashi (167). Finally we note that interesting effects including induced birefringence arise from the non-adiabatic coiling of light (168).

Circuits of $\mathbf{p}$ (Equation 62) can be accomplished by changing the polarization of light with polarizers and birefringent elements (137,139) (analogous experiments using electron diffraction have been performed by Bird and Preston (169)). A circuit of $\mathbf{p}$ amounts to evolution of the density operator according to the transformation $U_{\pm 1}(t)$, a 2×2 unitary transformation of the polarization submatrix in the $m = \pm 1$ helicity manifold ($SU(2)$). Berry's phase in this case is thus $-\frac{1}{2}m\Omega(C)$, where $m = \pm 1$ and $\Omega(C)$ is now the solid angle swept out by $\mathbf{p}(t)$ on the polarization sphere, called the *Poincaré sphere*. The bundle for this problem is the canonical (spin-1/2) bundle over S^2, and the monopole of Figure 4 is at the origin of the Poincaré sphere. In analogy with experiments on massive spin-1 particles (for example deuterons (170,171)) changes of $\mathbf{k}$ and $\mathbf{p}$ may be combined to yield more general

[3]Care must be taken in describing reflections from mirrors, because in addition to a re-direction of $\mathbf{k}$, the helicity is inverted.

optical circuits (172,173). The (four parameter) space of density matrices is given by:

$$\rho(\theta,\varphi,\alpha,\beta) = \begin{pmatrix} SO(3) \end{pmatrix} \begin{pmatrix} \begin{pmatrix} SU(2) \end{pmatrix} & \begin{matrix} 0 \\ 0 \end{matrix} \\ \begin{matrix} 0 & 0 \end{matrix} & 1 \end{pmatrix} \begin{pmatrix} \frac{1}{2}(1+p) & 0 & 0 \\ 0 & \frac{1}{2}(1-p) & 0 \\ 0 & 0 & 0 \end{pmatrix}$$
$$\times \begin{pmatrix} \begin{pmatrix} SU(2) \end{pmatrix} & \begin{matrix} 0 \\ 0 \end{matrix} \\ \begin{matrix} 0 & 0 \end{matrix} & 1 \end{pmatrix}^{\dagger} \begin{pmatrix} SO(3) \end{pmatrix}^{\dagger} \qquad 68.$$

The general bundle structure relevant to this case consists of a $U(1)$ fiber bundle whose base space (Equation 68) is itself a fiber bundle consisting of Poincaré spheres over the S^2 sphere of $\mathbf{k}$ space (174). Non-adiabatic circuits of $\mathbf{p}$ are interpreted as giving rise to a Pancharatnam phase, and we defer discussion of them until later.

DEGENERATE SYSTEMS A system in which a non-Abelian gauge potential gives rise to experimentally detectable effects was described by Van Vleck in 1929 (9), in a treatment of λ-doubling in diatomics. The phenomenon of λ-doubling arises from the interaction of electronic angular momentum with nuclear rotational angular momentum, and is manifested in line splittings in the rotational spectrum. Van Vleck found that in order to correctly describe the doubly degenerate $\lambda = \pm 1/2$ manifold an effective Hamiltonian must be used, in which the ∇ operator appearing in the kinetic energy term is replaced by $(\nabla - i\mathbf{A})$, where $\mathbf{A}$ is precisely the Wilczek-Zee gauge potential of Equation 35. Moody et al (87,157) and Jackiw (175) show how this treatment of λ-doubling is an example of a non-Abelian geometric phase. Other molecular and atomic systems where non-Abelian gauge potentials appear have been described, including systems with Kramers degeneracy (176,177), dissociating diatomics (178,179), and one electron atoms constrained to spherical surfaces (180).

As we have seen previously, a quadrupolar nucleus in an electric field gradient (Equation 49) is a simple system which can exhibit non-Abelian holonomies; we now discuss several experiments on such a system. Tycko (80) studied the ^{35}Cl nuclear quadrupole resonance (NQR) spectrum of an oriented single crystal of sodium chlorate ($NaClO_3$). NQR experiments measure the coupling of the nuclear quadrupole moment to the local electric field gradient (EFG). The EFG tensor defines a quantization axis, which can be made time-dependent by rotating the sample as in Figure 7(a). The ^{35}Cl nucleus has spin-3/2, and the interaction with the EFG splits the spin states into two degenerate pairs. This is an example where a non-Abelian gauge potential gives rise to what is effectively an Abelian holonomy because, for the conical circuit considered the gauge potential commutes with itself at all times, as described in detail by Zee (77). The quadrupole splitting of 29.94 MHz is much greater than the

sample-rotation frequency of several kHz, so the circuit is traversed adiabatically. The crystal is oriented with the EFG axis inclined at a known angle with the sample rotation axis, and the quantization axis traces out a cone in the laboratory frame. The NQR spectrum of the stationary sample consists of a single line composed of four overlapping transitions. As the sample rotates, Berry's phase is acquired by the eigenstates at a constant rate, which is manifested as frequency shifts in the various transitions. Two remain unshifted, one shifts to lower frequency, and one to higher frequency, leading to a symmetric three line spectrum (80).

An investigation of the Wilczek-Zee gauge potential can be accomplished by a modification of Tycko's experiment. For a quadrupolar nucleus in an axially symmetric EFG, such as ^{35}Cl in $NaClO_3$, the two relevant parameters of the Hamiltonian, Equation 49, are the two Euler angles describing the orientation of the EFG principal axis system z-axis with respect to a laboratory fixed frame of reference. As we mentioned previously, it can be shown (77) that for conical circuits that effectively vary only one angle, there exists a basis valid at all times that diagonalizes the gauge potential, and thus only Berry's phase is observed. If both angles are varied, no such basis exists, and the observed spectrum exhibits the consequences of the full non-Abelian gauge potential. Such an experiment has recently been performed (181) by rotating a sample around two axes using a novel double-rotor shown schematically in Figure 7(b) (182,183). The circuit followed by the quantization axis in this experiment is shown in Figure 5(f). By varying both Euler angles the $m = \pm 1/2$ states of the ^{35}Cl spin system are mixed by the gauge potential of Equations 50 and 51, which results in characteristic splittings in the spectrum. A typical spectrum under double rotation is shown in Figure 8 and the results are in agreement with the predictions of the non-Abelian gauge theory.

In light of these NQR experiments we note that although sample rotation is a commonly used means of *narrowing* magnetic resonance peaks through motional averaging, one should be aware of the fact that lines can also split and broaden under these circumstances. The NQR results suggest that spin relaxation due to the slow reorientation of molecules or magnetic fields (184,185,186) may arise from the accumulation of incoherent geometric phases. Similarly, Berry's phase has been proposed by Clough to explain the observed temperature dependence of methyl group tunnelling (187), and Gamliel and Freed have calculated a geometric phase associated with electron spin resonance in the presence of slow chemical exchange (188).

Nonadiabatic Phases

AHARONOV-ANANDAN PHASE The AA phase has been measured experimentally by Suter et al (189), using high-resolution NMR interferometry, a technique first demonstrated by Vaughan and co-workers in their study of 2π spinor rotations (190). The experiment involves a two-level subset of a three-level spin Hamiltonian. The

space of density operators (not necessarily pure) of the two-level system has the geometry of a sphere, and a unitary evolution of the density matrix can be viewed as a circuit on the sphere. The AA phase associated with such a circuit is related to the solid angle that it subtends. The AA phase accumulated by the two-level system undergoing a circuit is measured by interference with the third (unperturbed) level, and manifests itself in a density matrix element between the subset and the third level. This experiment provides a direct measurement of the holonomy for a quantum state rather than a difference of phases for a superposition. Thus $\gamma(C) = \pm\frac{1}{2}\Omega(C)$, rather than $\pm\Omega(C)$; Figure 9 shows the results for some of the circuits of Figure 5, showing the factor of 1/2 and the invariance to the shape of the circuit. An experiment analogous to tthat of Suter et al has been proposed by Agarwal (191), using a three level atom. Of course, the optical experiment of Chiao et al (165,166) can also be interpreted within the AA formalism.

PANCHARATNAM PHASE The simplest filtering experiments involve sending a polarized beam of light through a sequence of polarizers; this is the situation originally considered by Pancharatnam (137). In terms of our above discussion of optics these experiments are described by *discrete points of* **p**, the polarization vector, on the Poincaré sphere; the phase is calculated by connecting the points of **p** by geodesics. Using laser interferometry Bhandari and Samuel (192) studied various circuits of **p** (see also (193,194)); the rotation of the polarization vector was determined to be $-\frac{1}{2}\Omega(C)$, as predicted, independent of details of the circuit shape. In a related experiment, by Simon et al (195,174,196), the phase was acquired continuously and hence appears as a frequency shift as in the quadrupole experiments (80,181). Non-adiabatically traversed circuits of **p** for neutrons involving open paths have recently been studied by Weinfurter and Badurek (197). Stedman (198) has suggested an experiment based on the Pancharatnam connection as a convenient way to test Bell's inequalities.

In our description of both the Berry's phase experiment of Tomita and Chiao and the Pancharatnam phase experiments we have used the language of quantum mechanics. However, both effects are classical, and may be obtained from an analysis of Maxwell's Equations (97,161,168,199,200,201). Strictly quantum optics experiments have been proposed, using photon coincidence techniques and squeezed light (202,203,204,205).

GEOMETRIC PHASES OUTSIDE SPECTROSCOPY

The examples in this review were concerned mostly with geometric phases in systems of interest in spectroscopy. However, there is a substantial body of work concerning geometric phases in other areas of physics, primarily classical mechanics, field theories,

and solid-state physics, which we review very briefly here.

Shortly after Berry's work appeared, Hannay (206) studied a classical analog of the geometric phase. The adiabatic theorem of classical mechanics states that the action variables of a completely integrable Hamiltonian are invariant with respect to slow variations of external parameters. It can be shown that the conjugate angle variables acquire extra changes ("Hannay's Angles") due solely to geometry. Berry (207) showed that Hannay's angles and Berry's phase are related in the semiclassical limit (see also references (208,209,210,211,212,213,214) for more details on this area). The semiclassical limit of the Berry phase has been investigated within a path-integral formulation (215) and a WKB approach (216,217), as has the semiclassical limit of the AA phase (218). Wilkinson has shown how the WKB method directly gives rise to holonomies (219). Giavarini et al (220) and Hirayama and Tajima (221) have derived the conditions under which the Hannay angles will be non-zero given non-zero Berry's phase. Examples with non-zero Berry's phase and zero Hannay's angles have been given (222,223). Hannay's angles have been studied in a geometric formulation by Gozzi and Thacker (224,225), Montgomery (226), and Golin et al (227), and a non-Abelian generalization given (228). The measurability of the angles has been investigated by Golin (229,230). Recently the theory has been extended to non-integrable systems with symmetry (231,232), and nonadiabatic corrections to Hannay's angles have been derived (233,234).

Remarkable applications of geometric phases in classical mechanics have been provided by Shapere and Wilczek who considered swimming of organisms at low Reynold's number (235), and by Shapere and Wilczek (236), and Montgomery (120, 237) who studied the rotation of organisms or shape-changing objects under torque-free conditions. Let us outline briefly how gauge potentials and geometric phases can enter problems of this type. In the swimming problem at low Reynolds number (relevant to microorganisms in water or humans in thick molasses) the effects of inertia can be neglected and the result of a cyclic swimming stroke is completely determined by the *circuit of shapes* of the swimmer. In fact Shapere and Wilczek showed that the change in location of the swimmer is a geometric phase for the circuit in shape space. Thus swimming strokes that enclose no area in shape space (hand-waving, for example) are useless, whereas strokes that look like *circles* in regions of shape space with high (two-form) curvature are efficient. The relevant bundle of *located shapes* in this problem has a base manifold of *unlocated shapes* and fibers of *location* (the group of rigid translations and rotations)—as sketched in Figure 10. The net location change, i.e., translation and/or rotation, is the holonomy of a connection (gauge potential) on the space of shapes.

The problem of rotation without external torques (for example, a falling cat, an astronaut in outer space, or a motor comprised of a deformable core under the

influence of piezoelectric shape changing elements[4] (238,239)) is similar. Here the base manifold is again the space of shapes and a fiber is the group of rotations. The holonomy, in this case a rotation, is determined by a connection on the space of shapes and again it is purely geometric in origin. The gauge symmetry in these two problems (like the case of geometric phase for all the examples in this review) is a consequence of the fundamental ambiguity in assigning coordinates (in this case locations or orientations) to the shapes; any measured quantities must be invariant to the assignments. The geometric approach may be practically useful when the desired result of a process can be expressed as the holonomy of a connection; under such circumstances, knowing the topology and geometry of the base space we can imagine designing efficient cycles by working in high curvature regions of the base space with intelligently selected circuits. Similar considerations would be most useful in the design of pulse sequences for selective excitation (circuits in spin tensor space) in spin dynamics (240). The analogy between the swimming and reorientation problems and our first two examples of spin in a magnetic field and the Born-Oppenheimer molecule is appealing—the degeneracy or source in swimming and reorientation is a symmetric shape (for example a sphere) corresponding to the spin in zero field (or a density matrix with equal eigenvalues) and the undistorted molecule. The shape-changing maneuvers correspond to the variation of *extra coordinates* embodied in the coupling of the spin to a magnetic field or the coupling of the electronic degeneracy to distorted nuclear configurations. As Clough reminds us (241), a spherical creature needs to "deform to create a paddle" in order to swim or rotate.

Decoupling between "fast" and "slow" degrees of freedom arises also in field theory. Thus, the additional term in the Lagrangian known as the Wess-Zumino effective Lagrangian can be interpreted as a Berry's phase due to the decoupling of fermionic vacuum states from the Goldstone boson fields (49,242,243,244,245). In a similar context, similar effective Lagrangians are used in the description of solitons (246,247,248,249,250) and anomalies (symmetries of a classical field theory which are lost when the theory is quantized) (251,252,253,254,255,256,257). Geometric phases in classical field theories have been studied as well (258,259). Solutions to the Dirac Equation have been studied from a geometric viewpoint (260,261,262,263), and Berry's phase effects have even been used to describe the adiabatic following of gravity by matter (264).

A final area of physics in which geometric and topological ideas have become increasingly important is the study of many-body systems, particularly in two dimensions. The quantization of two-dimensional systems is influenced by winding numbers, which embody the fact that circuits contractible to points in three dimensions may be inequivalent in two dimensions; this gives rise to so-called fractional statistics (71,265,266,267,268). The quantum Hall effect has been analyzed in

[4]Prototypes for such motors have been constructed (J. Marsden, private communication).

terms of particles with fractional statistics (269,270,271,272,273), as has superconductivity in two dimensions (274,275). Fractional statistics have also been considered in theories of superstrings (276), superfluids (277,278,279), and many-body theories of nuclei (280,281,282). A Berry's phase of $\pm\pi$ (a sign change) has been obtained in a study of tunneling in a two-dimensional system (283). Non-trivial topological effects also arise in one dimensional conducting systems with complicated topologies (284,285,286), and the topology of conducting systems in higher dimensions has also been investigated (287).

CONCLUSIONS

We have reviewed some of the theory and experiments that have stemmed from Berry's paper of 1984 (1), and Simon's subsequent interpretation in 1983 (2). We have attempted to give both a practical introduction to the theory, and a flavor of the more abstract approach which illustrates the geometric nature of Berry's phase. We have also discussed various experimental checks of these ideas.

By way of conclusions, we would like to emphasize the following points about what Berry's phase is and is not. Berry's phase is not a statement that the Schrödinger Equation is inadequate or incorrect—the experiments described above may be analyzed in terms of its exact solutions. Berry's phase is, initially, a statement that the usual approach to the adiabatic theorem is deficient. More importantly, Berry's phase and its generalizations, particularly the AA phase, show that geometric ideas beyond adiabatic processes are useful in understanding quantum evolution, in that they allow for analysis of the general geometric features of a wide class of systems without having to solve each problem in detail. These geometric ideas also show how apparently diverse phenomena may be appreciated from a single unified framework involving gauge symmetry.

As far as the state of the field is concerned, many of the problems raised in 1984 have now been solved. Berry's canonical example of a spin in a field has been checked experimentally in several ways, for example, with spins and photons, simpler systems such as the Jahn-Teller problem have been studied, and a quadrupole system showing the effects of a non-Abelian geometric phase has been investigated. The AA phase has also been measured directly by magnetic resonance interferometry. Remaining experimental challenges include the non-Abelian generalization (both unitary and non-unitary) of the AA phase (131), and quantum versions of the optics experiments. Theoretical studies of geometric phase are moving in several directions. One of the most interesting is the application of geometric ideas to classical systems, particularly to non-integrable Hamiltonian systems (231) and deformable bodies (235,236). Another area of great promise is the application of optimal control theory to geometric phase problems, in which one searches for efficient paths that generate a desired holon-

omy. Some information on this problem has been derived by Montgomery (120). An intriguing recent development concerns the possible role of anyons (particles with fractional statistics in two dimensions) in high temperature superconductivity (see (72) and references therein). Surely the scope of developments since his contribution must bring a smile to Berry's face.

Acknowledgements

It is a pleasure to thank Robert Harris and Richard Montgomery for many valuable discussions. This work was supported by the Director, Office of Energy Research, Office of Basic Energy Sciences, Materials Sciences Division of the U. S. Department of Energy under Contract No. DE-AC03-76SF00098.

Literature Cited

1. Berry, M. V. 1984. *Proc. R. Soc. Lond. A* 392:45-57
2. Simon, B. 1983. *Phys. Rev. Lett.* 51:2167-70
3. Nash, N., Sen, S. 1983. *Topology and Geometry for Physicists.* London: Academic Press
4. Shapere, A., Wilczek, F. 1989. *Geometric Phases in Physics.* Singapore: World Scientific
5. Berry, M. V. 1988. *Sci. Am.* 259:46-52
6. Moriyasu, K. 1983. *An Elementary Primer For Gauge Theory.* Singapore: World Scientific
7. Messiah, A. 1958. *Quantum Mechanics*, Vol. II, ch. XVII, §13. New-York: Wiley and Sons
8. Schiff, L. I. 1968. *Quantum Mechanics*, 3rd ed., ch. 8. New York: McGraw-Hill
9. Van Vleck, J. H. 1929. *Phys. Rev.* 33:467-506
10. Longuet-Higgins, H. C., Öpik, U., Pryce, M. H. L., Sack, R. A. 1958. *Proc. Roy. Soc. Lond. A* 244:1
11. Herzberg, G., Longuet-Higgins, H. C. 1963. *Disc. Farad. Soc.* 35:77-82
12. Mead, C. A., Truhlar, D. G. 1979. *J. Chem. Phys.* 70:2284-96
13. Köppel, H., Domcke, W., Cederbaum, L. S. 1984. *Adv. Chem. Phys.* 57:59-246

14. Bersuker, I. B. 1984. *The Jahn-Teller Effect and Vibronic Interactions in Modern Chemistry.* New York: Plenum

15. Jahn, H. A., Teller, E. 1937. *Proc. Roy. Soc. Lond. A* 161:220-35

16. Longuet-Higgins, H. C. 1961. *Adv. Spec.* 2:429-72

17. Whetten, R. L., Ezra, G. S., Grant, E. R. 1985. *Ann. Rev. Phys. Chem.* 36:277-320

18. Dirac, P. A. M. 1930. *The Principles of Quantum Mechanics.* Oxford: Oxford University Press

19. Aharonov, Y., Susskind, L. 1967. *Phys. Rev.* 158:1237-38

20. Bernstein, H. J. 1967. *Phys. Rev. Lett.* 1102-03

21. Silverman, M. P. 1980. *Eur. J. Phys.* 1:116-23

22. Merzbacher, E. 1962. *Am. J. Phys.* 30:237-47

23. Sakurai, J. J. 1985. *Modern Quantum Mechanics.* Menlo Park: Benjamin/Cummings

24. Pacher, T., Mead, C. A., Cederbaum, L. S., Köppel, H. 1989. *J. Chem. Phys.* 91:7057-62

25. Aharonov, Y., Bohm, D. 1959. *Phys. Rev.* 115:485-91

26. Mead, C. A. 1980. *Chem. Phys.* 49:23-32

27. Delacrétaz, G., Grant, E. R., Whetten, R. L., Wöste, L., Zwanziger, J. W. 1986. *Phys. Rev. Lett.* 56:2598-2601

28. Ham, F. S. 1987. *Phys. Rev. Lett.* 58:725-28

29. Zwanziger, J. W., Grant, E. R. 1987. *J. Chem. Phys.* 87:2954-64

30. Stone, A. J. 1976. *Proc. R. Soc. Lond. A* 351:141-50

31. Von Neumann, J., Wigner, E. P. 1929. *Phys. Z.* 30:467-70

32. Arnold, V. I. 1978. *Mathematical Methods of Classical Mechanics.* App. 10, New York: Springer-Verlag

33. Douglas, R. R., Rutherford, A. R. 1990. *Quantum Adiabatic Phase, Algebraic Topology, and Time-Reversal Invariance.* New York: Springer-Verlag, Lecture Notes in Physics. In Press

34. Korsch, H. J. 1983. *Phys. Lett. A* 97:77-80

35. Berry, M. V., Wilkinson, M. 1984. *Proc. R. Soc. Lond. A* 392:15-43

36. Nielsen, H. H. 1932. *Phys. Rev.* 40:445-56

37. Koehler, J. S., Dennison, D. M. 1940. *Phys. Rev.* 57:1006-21

38. Miller, W. H. 1968. *J. Chem. Phys.* 48:1651-58

39. Guichardet, A. 1984. *Ann. Inst. H. Poincaré* 40:329-42

40. Iwai, T. 1987. *J. Math. Phys.* 28:964-74

41. Iwai, T. 1987. *J. Math. Phys.* 28:1315-26

42. Wu, Y. 1989. *J. Phys. A* 22:L117-21

43. Wilczek, F., Zee, A. 1984. *Phys. Rev. Lett.* 52:2111-14

44. Berry, M. V. 1987. *Proc. Roy. Soc. Lond. A* 414:31-46

45. Aharonov, Y., Anandan, J. 1987. *Phys. Rev. Lett.* 58:1593-96

46. Holstein, B. R. 1989. *Am. J. Phys.* 57:1079-84

47. Bhandari, R. 1990. *Geometric Phases in Physics*, in *Horizons in Physics, Vol. II* Nath, N., ed. Wiley Eastern

48. Jackiw, R. 1988. *Comm. At. Mol. Phys.* 21:71-82

49. Aitchison, I. J. R. 1988. *Phys. Scr.* T23:12-20

50. Anandan, J. 1988. *Ann. Inst. H. Poincaré*, 49:271-86

51. Berry, M. V. 1989. *Quantum Adiabatic Holonomy*, presented at *Ferrara School of Theoretical Physics on "Anomalies, defects, phases..."*. Bibliopolis: Naples

52. Dubovik, V. M., Vinitsky, S. I., Markovski, B., eds. 1989. *Topological Phases in Quantum Theory.* Singapore: World Scientific

53. Born, M., Fock, V. 1928. *Zeit. f. Phys.* 51:165-80

54. Kato, T. 1950. *J. Phys. Soc. Jpn.* 5:435-39

55. Kuratsuji, H., Iida, S. 1985. *Prog. Theor. Phys.* 74:439-45

56. Kuratsuji, H., Iida, S. 1986. *Phys. Rev. Lett.* 56:1003-06

57. Bulgac, A. 1988. *Phys. Rev. A* 37:4084-89

58. Giavarini, G., Gozzi, E., Rohrlich, D., Thacker, W. D. 1989. *J. Phys. A* 22:3513-29

59. Mondragon, R. J., Berry, M. V. 1989. *Proc. R. Soc. Lond. A* 424:263-78

60. Berry, M. V. 1985. *Fundamental Aspects of Quantum Theory.* Gorini, V., Frigerio, A., eds. NATO ASI Series B, 144:267-78. New York: Plenum Press

61. Suter, D., Chingas, G., Harris, R., Pines, A. 1987. *Mol. Phys.* 61:1327-40

62. Bouchiat, C. 1987. *J. Phys. (Paris)* 48:1627-31

63. Morales, D. A. 1988. *J. Phys. A* 21:L889-92

64. Engineer, M. H., Ghosh, G. 1988. *J. Phys. A* 21:L95-98

65. Cervero, J. M., Lejarreta, J. D. 1989. *J. Phys. A* 22:L663-66

66. Berry, M. V., Mondragon, R. J. 1986. *J. Phys. A* 19:873-85

67. Hoodbhoy, P. 1988. *Phys. Rev. A* 38:3766-68

68. Dirac, P. A. M. 1931. *Proc. Roy. Soc. London A* 133:60

69. Coleman, S. 1983. *Les Houches 1981: Session 37 Gauge Theories in High Energy Physics*, Gaillard, M. K., Stora, R., eds. Amsterdam: North Holland

70. Rabi, I. I. 1954. *Rev. Mod. Phys.* 26:167-71

71. Wilczek, F., Zee, A. 1983. *Phys. Rev. Lett.* 51:2250-52

72. Canright, G. S., Girvin, S. M. 1990. *Science.* In press

73. Romero-Rochin, V., Cina, J. A. 1989. *J. Chem. Phys.* 91:6103-12

74. Chancey, C. C., O'Brien, M. C. M. 1988. *J. Phys. A* 21:3347-53

75. O'Brien, M. C. M. 1989. *J. Phys. A* 22:1779-97

76. Kobayashi, S., Nomizu, K. 1963. *Foundations of Differential Geometry.* New York: Interscience Publishers

77. Zee, A. 1988. *Phys. Rev. A* 38:1-6

78. Avron, J. E., Sadun, L., Segert, J., Simon, B. 1989. *Commun. Math. Phys.* 124:595-627

79. Slichter, C. P. 1990. *Principles of Magnetic Resonance*, 3rd ed. New York: Springer-Verlag

80. Tycko, R. 1987. *Phys. Rev. Lett.* 58:2281-84

81. Tomita, A., Chiao, R. 1986. *Phys. Rev. Lett.* 57:937-40

82. Nakagawa, N. 1987. *Ann. Phys. (NY).* 179:145-66

83. Sun, C.-P. 1988. *J. Phys. A* 21:1595-99

84. Salmistraro, F. 1988. *Phys. Rev. A* 38:6416-18

85. Wu, Z. 1989. *Phys. Rev. A* 40:2184-87

86. Berry, M. V. 1990. *Proc. Roy. Soc. London A.* In press

87. Moody, J., Shapere, A., Wilczek, F. 1989. See Ref. (4), chap. 3

88. Coveney, P. V., Crothers, D. S. F., Macek, J. H. 1988. *J. Phys. B* 21:L165-68

89. Flanders, H. 1963. *Differential Forms with Applications to the Physical Sciences.* New York: Academic Press

90. Burke, W. L. 1987. *Applied Differential Geometry.* New York: Cambridge University Press

91. Bernstein, H. J., Phillips, A. V. 1981 *Sci. Am.* 245:122-37

92. Choquet-Bruhat, Y., DeWitt-Morette, C., Dillard-Bleick, M. 1982. *Analysis, Manifolds, and Physics.* Amsterdam: North-Holland

93. Zumino, B. 1987. Lawrence Berkeley Laboratory Report LBL-23056

94. Avron, J. E., Seiler, R., Yaffe, L. G. 1987. *Commun. Math. Phys.* 110:33-49

95. Segert, J. 1987. *J. Math. Phys.* 28:2102-14

96. Vinet, L. 1988. *Phys. Rev. D* 37:2369-72

97. Segert, J. 1987. *Phys. Rev. A* 36:10-15

98. Kugler, M., Shtrikman, S. 1988. *Phys. Rev. D* 37:934-37

99. Cina, J. A. 1986. *Chem. Phys. Lett.* 132:393-95

100. Edwards, Jr., C. H. 1973. *Advanced Calculus of Several Variables.* New York: Academic Press

101. Anandan, J., Stodolsky, L. 1987. *Phys. Rev. D* 35:2597-99

102. Jordan, T. F. 1988. *J. Math. Phys.* 29:2042-52

103. Jordan, T. F. 1987. *J. Math. Phys.* 28:1759-60

104. Avron, J. E., Seiler, R., Simon, B. 1983. *Phys. Rev. Lett.* 51:51-53

105. Avron, J. E., Seiler, R. 1984. *J. Geom. Phys.* vol. 1, no. 3:13-23

106. Dandoloff, D., Zakrzewski, W. G. 1989. *J. Phys. A* 22:L461-66

107. Avron, J. E., Sadun, L., Segert, J., Simon, B. 1989. *Phys. Rev. Lett.* 61:1329-32

108. Sadun, L., Segert, J. 1989. *J. Phys. A* 22:L111-15

109. Kiritsis, E. 1987. *Commun. Math. Phys.* 111:417-37

110. Wu, T. T., Yang, C. N. 1975. *Phys. Rev. D* 12:3845-57

111. Yang, C. N. 1977. *Ann. NY Acad. Sciences* 294:86-97

112. Cushman, R., Duistermaat, J. J. 1988. *Bull. Am. Math. Soc.* 19:475-79

113. Eguchi, T., Gilkey, P. B., Hanson, A. J. 1980. *Phys. Rep.* 66:213-393

114. Benedict, M. G., Fehér, L. Gy., Horvath, Z. 1989. *J. Math. Phys.* 30:1727-31

115. Belavin, A. A., Polyakov, A. M., Schwartz, A. S., Tyupkin, Yu. S. 1975. *Phys. Lett. B* 59:85

116. t' Hooft, G. 1976. *Phys. Rev. Lett.* 37:8

117. Hey, A. J. G., Merlin, J. H., William Ricketts, M., Vaughn, M. T., Williams, D. C. 1988. *Science* 240:1163-68

118. Anandan, J., Aharonov, Y. 1988. *Phys. Rev. D* 38:1863-70

119. Bouchiat, C., Gibbons, G. W. 1988. *J. Phys. (Paris)* 49:187-99

120. Montgomery, R. 1990. *Commun. Math. Phys.* In press

121. Samuel, J., Bhandari, R. 1988. *Phys. Rev. Lett.* 60:2339-42

122. Anandan, J., Pines, A. 1989. *Phys. Lett. A* 141:335-39

123. Feynman, R. P., Vernon, Jr., F. L., Hellwarth, R. W. 1957. *J. Appl. Phys.* 28:49

124. Page, D. N. 1987. *Phys. Rev. A* 36:3479-81

125. Cheng, C. M., Fung, P. C. W. 1989. *J. Phys. A* 22:3493-3501

126. Layton, E., Huang, Y., Chu, S.-I., 1990. *Phys. Rev. A* 41:42-48

127. Bouchiat, C. 1989. *J. Phys. (Paris)* 50:1041-45

128. Garrison, J. C., Wright, E. M. 1988. *Phys. Lett. A* 128:177-81

129. Chu, S.-I., Wu, Z.-C., Layton, E. 1989. *Chem. Phys. Lett.* 157:151-58

130. Kuratsuji, H. 1988. *Phys. Rev. Lett.* 61:1687-90

131. Anandan, J. 1988. *Phys. Lett. A* 133:171-75

132. Uhlmann, A. 1986. *Rep. Math. Phys.* 24:229-40

133. Uhlmann, A. 1989. *Ann. Phys. (E. Germany)* 46:63-69

134. Dąbrowski, L., Jadczyk, A. 1989. *J. Phys. A* 22:3167-70

135. Ralston, J. P. 1989. *Phys. Rev. A* 40:4872-84

136. Ralston, J. P. 1989. *Phys. Rev. A* 40:5400-03

137. Pancharatnam, S. 1956. *Proc. Ind. Acad. Sci. A* 44:247-62. This paper is reprinted in Ref. (4).

138. Ramaseshan, S., Nityananda, R. 1986. *Current Science, India* 55:1225-26

139. Berry, M. V. 1987. *J. Mod. Optics* 34:1401-07

140. Benedict, M. G., Fehér, L. Gy. 1989. *Phys. Rev. D* 39:3194-96

141. Jordan, T. F. 1988. *Phys. Rev. A* 38:1590-92

142. Herdegen, A. 1989. *Phys. Lett. A* 139:109-11

143. Zak, J. 1989. *Europhys. Lett.* 9:615-20

144. Grangier, P., Roger, G., Aspect, A. 1986. *Europhys. Lett.* 1:173-79

145. Aharonov, Y., Vardi, M. 1979. *Phys. Rev. D* 20:3213-15

146. Dehmelt, H. 1988. *Z. Phys. D* 10:127-34

147. Pines, A. 1989. *Abelian and Non-Abelian Holonomy in NMR Interferometry.* Presented at Conference on Foundations of Quantum Mechanics: Thirty Years of the Aharonov-Bohm Effect, Columbia, SC

148. Barnett, S. M., Ellinas, D., Dupertuis, M. A. 1988. *J. Mod. Optics* 35:565-74

149. Breuer, H. P., Dietz, K., Holthaus, M. 1988. *Z. Phys. D* 8:349-57

150. Ellinas, D., Barnett, S. M., Dupertuis, M. A. 1989. *Phys. Rev. A* 39:3228-37

151. Matveev, V. I., Musakhanov, M. M. 1989. *Phys. Lett. A* 135:209-11

152. Tewari, S. P. 1989. *Phys. Rev. A* 39:6082-85

153. Cina, J. A., Schofield, S. A. 1989. *Mol. Phys.* 67:271-79

154. Bitter, T., Dubbers, D. 1987. *Phys. Rev. Lett.* 59:251-54

155. Dubbers, D. 1988. *Physica B* 151:93-95

156. Richardson, D. J., Kilvington, A. I., Green, K., Lamoreaux, S. K. 1988. *Phys. Rev. Lett.* 61:2030-33

157. Moody, J., Shapere, A., Wilczek, F. 1986. *Phys. Rev. Lett.* 56:893-96.

158. Kurşunoğlu, B. 1962. *Modern Quantum Theory.* San Francisco: W. H. Freeman

159. Takahashi, Y. 1969. *An Introduction fo Field Quantization.* New York: Pergamon

160. Marcuse, D. 1980. *Principles of Quantum Electronics.* New York: Academic

161. Ross, J. N. 1984. *Opt. Quant. Elect.* 16:455

162. Chiao, R., Wu, Y. 1986. *Phys. Rev. Lett.* 57:933-36

163. Bialynicki-Birula, I., Bialynicki-Birula, Z. 1987. *Phys. Rev. D* 35:2383-86

164. Kitano, M., Yabuzaki, T., Ogawa, T. 1987. *Phys. Rev. Lett.* 58:523

165. Chiao, R. Y., Antaramian, A., Ganga, K. M., Jiao, H., Wilkinson, S. R., Nathel, H. 1988. *Phys. Rev. Lett.* 60:1214-17

166. Hong, J., Wilkinson, S. R., Chiao, R. Y., Nathel, H. 1989. *Phys. Rev. A* 39:3475-86

167. Igarashi, J. 1988. *J. Phys. Soc. Jpn.* 57:962-68

168. Berry, M. V. 1987. *Nature* 326:277-78

169. Bird, D. M., Preston, A. R. 1988. *Phys. Rev. Lett.* 61:2863-66

170. Vega, S., Pines, A. 1977. *J. Chem. Phys.* 66:5624-44

171. Mehring, M. 1983. *Principles of High Resolution NMR in Solids.* New York: Springer-Verlag

172. Bhandari, R. 1989. *Phys. Lett. A* 135:240-44

173. Bhandari, R. 1989. *Phys. Lett. A* 138:469-73

174. Bhandari, R. 1989. *Phys. Rev. Lett.* 63:1020

175. Jackiw, R. 1986. *Phys. Rev. Lett.* 56:2779-80

176. Mead, C. A. 1987. *Phys. Rev. Lett.* 59:230-33

177. Segert, J. 1987. *Ann. Phys. (NY)* 179:294-312

178. Zygelman, B. 1987. *Phys. Lett. A* 125:476-81

179. Zygelman, B. 1990. *Phys. Rev. Lett.* 64:256-59

180. Li, H.-Z. 1987. *Phys. Rev. Lett.* 58:539-42

181. Zwanziger, J. W., Koenig, M., Pines, A. 1989. Lawrence Berkeley Laboratory Report LBL-28535

182. Samoson, A., Pines, A. 1989. *Rev. Sci. Instrum.* 60:3239-41

183. Chmelka, B. F., Pines, A. 1989. *Science* 246:71-77

184. Emid, S., Smidt, J., Pines, A. 1981. *J. Magn. Reson.* 45:94-101

185. Esteve, D., Urbina, C., Goldman, M., Frisby, H., Raynaud, H., Strzelecki, L. 1984. *Phys. Rev. Lett.* 52:1180-83

186. Jeener, J., Bell, J. D., Broekaert, P., Thomas, P., Dumont, E. 1986. *Proceedings of the XXIII Congress Ampère*, pp. 5-10, Maraviglia, B., De Luca, F., Campanella, R., eds., Rome: Istituto Superiore di Sanita'

187. Clough, S. 1989. *Mol. Phys.* 68:1255-63

188. Gamliel, D., Freed, J. H. 1989. *Phys. Rev. A* 39:3238-55

189. Suter, D., Mueller, K. T., Pines, A. 1988. *Phys. Rev. Lett.* 60:1218-20

190. Stoll, M. E., Vega, A. J., Vaughan, R. W. 1977. *Phys. Rev. A* 16:1521-24

191. Agarwal, G. S. 1988. *Phys. Rev. A* 38:5957-59

192. Bhandari, R., Samuel, J. 1988. *Phys. Rev. Lett.* 60:1211-13

193. Bhandari, R. 1988. *Phys. Lett. A* 133:1-3

194. Chyba, T. H., Wang, L. J., Mandel, L., Simon, R. 1988. *Opt. Lett.* 13:562-64

195. Simon, R., Kimble, H. J., Sudarshan, E. C. G. 1988. *Phys. Rev. Lett.* 61:19-22

196. Simon, R., Kimble, H. J., Sudarshan, E. C. G. 1989. *Phys. Rev. Lett.* 63:1021

197. Weinfurter, H., Badurek, G. 1990. *Phys. Rev. Lett.* In press

198. Stedman, G. E. 1989. *J. Mod. Optics* 36:1461-70

199. Haldane, F. D. M. 1986. *Optics Lett.* 11:730-32

200. Haldane, F. D. M. 1987. *Phys. Rev. Lett.* 59:1788

201. Chiao, R. Y., Tomita, A. 1987. *Phys. Rev. Lett.* 59:1789

202. Chiao, R. Y., Jordan, T. F. 1988. *Phys. Lett. A* 132:77-81

203. Chiao, R. Y. 1989. *Nucl. Phys. B* 6:327-33

204. Fan, H.-Y., Zaidi, H. R. 1988. *Can. J. Phys.* 66:978-80

205. Gerry, C. C. 1989. *Phys. Rev. A* 39:3204-07

206. Hannay, J. H. 1985. *J. Phys. A* 18:221-30

207. Berry, M. V. 1985. *J. Phys. A* 18:15-27

208. Littlejohn, R. G. 1988. *Phys. Rev. Lett.* 61:2159-62

209. Ghosh, G., Dutta-Roy, B. 1988. *Phys. Rev. D* 37:1709-11

210. Anandan, J. 1988. *Phys. Lett. A.* 129:201-07

211. Iida, S., Kuratsuji, H. 1987. *Phys. Lett. B* 184:242-46

212. Abe, S. 1989. *Phys. Rev. D* 39:2327-31

213. Weinstein, A. 1990. *Adv. Math.* In press

214. Biswas, S. N., Soni, S. K., Govdindaragan, T. R. 1990. *J. Phys. A* 23:L7-10

215. Kuratsuji, H., Iida, S. 1985. *Phys. Lett. A* 111:220-22

216. Yabana, K., Horiuchi, H. 1986. *Prog. Theor. Phys.* 75:592-618

217. Bender, C. M., Papanicolaou, N. 1988. *J. Phys. (Paris)* 49:561-66

218. Reinhardt, H. 1987. *Phys. Rev. Lett.* 59:2823

219. Wilkinson, M. 1984. *J. Phys. A* 17:3459-76

220. Giavarini, G., Gozzi, E., Rohrlich, D., Thacker, W. D. 1989. *Phys. Rev. D* 39:3007-15

221. Hirayama, M., Tajima, T. 1988. *Prog. Theor. Phys.* 79:746-57

222. Chaturvedi, S., Sriram, M. S., Srinivasan, V. 1987. *J. Phys. A* 20:L1071

223. Engineer, M. H. 1988. *J. Phys. A* 21:669-77

224. Gozzi, E., Thacker, W. D. 1987. *Phys. Rev. D* 35:2388-97

225. Gozzi, E., Thacker, W. D. 1987. *Phys. Rev. D* 35:2398-2406

226. Montgomery, R. 1988. *Commun. Math. Phys.* 120:269-94

227. Golin, S., Knauf, A., Marmi, S. 1989. *Commun. Math. Phys.* 123:95-122

228. Wu, Y. 1990. *J. Math. Phys.* 31:294-99

229. Golin, S. 1988. *J. Phys. A* 21:4535-47

230. Golin, S. 1989. *J. Phys. A* 22:4573-80

231. Marsden, J., Montgomery, R., Ratiu, T. 1989. *Cont. Math.* 97:179-96

232. Marsden, J., Montgomery, R., Ratiu, T. 1990. *Mem. A. M. S.* In press

233. Berry, M. V., Hannay, J. H. 1988. *J. Phys. A* 21:L325-31

234. Bhattacharjee, A., Sen, T. 1988. *Phys. Rev. A* 38:4389-94

235. Shapere, A., Wilczek, F. 1989. *J. Fluid Mech.* 198:557-85

236. Shapere, A., Wilczek, F. 1987. *Phys. Rev. Lett.* 58:2051-54

237. Montgomery, R. 1989. Center for Pure and Applied Mathematics Report PAM-481, University of California, Berkeley

238. Brockett, R. W. 1987. *Proc. 1987 IEEE Conf. Decision and Control* pp. 1418-22

239. Brockett, R. W. 1989. *Sensors and Actuators* 20:91-96

240. Pines, A. 1988. *Proceedings of the 100th School of Physics "Enrico Fermi"*, pp. 43-120. Amsterdam: North Holland

241. Clough, S. 1989. *Angew. Chem. Int. Ed. Engl. Adv. Mater.* 28:1124-26

242. Stone, M. 1986. *Phys. Rev. D* 33:1191-94

243. Aitchison, I. J. R. 1987. *Acta Phys. Pol. B* 18:207-35

244. Stone, M., Goff, W. E. 1988. *Nucl. Phys. B.* 295:243-61

245. Goff, W. E., Gaitan, F., Stone, M. 1989. *Phys. Lett. A* 136:433-40

246. Goldstone, J., Wilczek, F. 1981. *Phys. Rev. Lett.* 47:986-89

247. Witten, E. 1983. *Nucl. Phys. B.* 223:422-32

248. Tze, C.-H., Nam, S. 1989. *Ann. Phys.* 193:419-71

249. Vorov, O. K. 1988. *Sov. J. Nucl. Phys.* 48:631-32

250. Birse, M. C., McGovern, J. A. 1988. *J. Phys. A* 21:2253-60

251. Nelson, P., Alvarez-Gaumé, L. 1985. *Comm. Math. Phys.* 99:103-14

252. Niemi, A. J., Semenoff, G. W. 1985. *Phys. Rev. Lett.* 55:927-30

253. Sonada, H. 1986. *Nucl. Phys. B* 266:410-22

254. Jackiw, R. 1988. *Int. J. Mod. Phys. A* 3:285-97

255. Koretune, S. 1989. *Phys. Lett. B* 217:119-22

256. Paranjape, M. B. 1989. *Phys. Rev. D* 40:540-44

257. Martinez, J. C. 1989. *Phys. Lett. A* 134:335-38

258. Garrison, J. C., Chiao, R. Y. 1988. *Phys. Rev. Lett.* 60:165-68

259. Anandan, J. 1988. *Phys. Rev. Lett.* 60:2555

260. Li, H.-Z. 1987. *Phys. Rev. D* 35:2615-18

261. Bulla, W., Falkensteiner, P., Grosse, H. 1988. *Phys. Lett. B* 215:359-63

262. Liang, J. Q. 1988. *Physica B* 151:239-44

263. Martinez, J. C. 1989. *J. Phys. A* 22:1711-14

264. Brout, R., Venturi, G. 1989. *Phys. Rev. D* 39:2436-39

265. Wu, Y.-S. 1984. *Phys. Rev. Lett.* 53:111-14

266. Arovas, D. P., Schrieffer, R., Wilczek, F., Zee, A. 1985. *Nucl. Phys. B.* 251:117-26

267. Schrieffer, J. R. 1985. *Mol. Cryst. Liq. Cryst.* 118:57-64

268. Liang, J. Q., Ding, X. X. 1987. *Phys. Rev. A* 36:4149-54

269. Arovas, D., Schrieffer, J. R., Wilczek, F. 1984. *Phys. Rev. Lett.* 53:722-23

270. Arovas, D. See Ref. (4), ch. 6.

271. Girvin, S. M., MacDonald, A. H. 1987. *Phys. Rev. Lett.* 58:1252-55

272. Kuratsuji, H. 1987. *Phys. Lett. A* 120:141

273. Semenoff, G. W., Sodano, P. 1986. *Phys. Rev. Lett.* 57:1195-98

274. Laughlin, R. B. 1988. *Phys. Rev. Lett.* 60:2677-80

275. Kuratsuji, H. 1988. *Phys. Lett. A* 128:286-88

276. Chapline, G., Grossman, B. 1989. *Phys. Lett. B* 223:336-42

277. Chiao, R. Y., Hansen, A., Moulthrop, A. A. 1985. *Phys. Rev. Lett.* 54:1339-42

278. Hansen, A., Moulthrop, A. A., Chiao, R. Y. 1985. *Phys. Rev. Lett.* 55:1431-34

279. Schakel, A. M. J. 1989. *Europhys. Lett.* 10:159-63

280. Nikam, R. S., Ring, P. 1987. *Phys. Rev. Lett.* 58:980-83

281. Price, C., Esbensen, H., Landowne, S. 1987. *Phys. Lett. B* 197:15-18

282. Zhang, J.-Y., Garrett, J. D. 1989. *Phys. Rev. Lett.* 62:693

283. Jain, J. K., Kivelson, S. 1988. *Phys. Rev. B* 37:4111-25

284. Avron, J. E., Raveh, A., Zur, B. 1987. *Phys. Rev. Lett.* 58:2110-13

285. Avron, J. E., Raveh, A., Zur, B. 1988. *Rev. Mod. Phys.* 60:873-915

286. Avron, J. E., Sadun, L. 1989. *Phys. Rev. Lett.* 62:3082-84

287. Kunz, H. 1986. *Phys. Rev. Lett.* 57:1095-97

Figure Captions

Figure 1 A simple example of holonomy, obtained by transporting a tangent vector on the surface of a sphere. The vector is initially at the north pole, and is moved along the path C in such a way that it maintains a constant angle with the tangent to the path; this process corresponds to parallel transport of the vector. Upon its return to the north pole, the orientation of the vector is rotated by the amount $\gamma(C)$, the angle holonomy. The holonomy in this case is equal to $\pi/2$, the solid angle subtended by the path, a purely geometric quantity. In terms of geometry this picture represents parallel transport in the tangent bundle of the two-sphere; the tangent bundle is the collection of tangent planes, one of which is shown at the north pole. This figure is relevant to the problem of transporting a spin-1 in a magnetic field.

Figure 2 Born-Oppenheimer potentials for the Jahn-Teller $E \otimes e$ system, shown by taking a slice through the axially symmetric surfaces. Energy is plotted as a function of displacements in the degenerate nuclear vibration. On the left are the surfaces with no vibronic interaction; the degeneracy of these surfaces is lifted, as shown on the right, for $k \neq 0$, at all but a single point. The two surfaces diverge linearly from one another at the origin (the point of electronic degeneracy), with the lower surface showing stabilization for certain distorted geometries. The conical intersection at the degeneracy is the source of geometric phase for the evolution of adiabatic states.

Figure 3 Pseudo-rotation in a trimer (27). The electronic degeneracy occurs at the symmetric configuration, shown as the equilateral triangle in the center. The lower energy shapes are distorted triangles. Low-lying vibronic states are transported around the degeneracy by the pseudo-rotation, which results in a closed circuit in parameter space (the space of nuclear shapes) and a corresponding Berry's phase.

Figure 4 The geometry of Berry's phase (1). For illustrative purposes we show a spherical parameter space, relevant to the problem of spin in a magnetic field. A state vector is transported adiabatically as the parameters change slowly along the circuit C. The final state vector differs from the initial one by a geometric phase factor, which can be related to the flux of a vector field (in general the curvature two-form) through a surface bounded by C. In the case shown the isotropic vector field arises from a monopole at the origin and hence the phase is proportional only to the solid angle subtended by C and not to details of its shape. The accumulation of phase is related to the Aharonov-Bohm effect.

Figure 5 Some possible circuits for geometric phases: cone (circle) (a), spherical triangle (b), slice (or wedge) (c), figure-8 (d), flower (e), and slinky (f). Circuits

(a) through (c) have been used to study Abelian geometric phases. The figure-8 (d) would be particularly useful for studying non-Abelian geometric phases, since it encloses no net (oriented) area. Circuits (e) and (f) can be implemented by means of a double rotor (Figure 7(b)); circuit (f) has been used to study the effects of non-Abelian geometric phase.

Figure 6 Sketch of a fiber bundle, showing a connection and holonomy. The base manifold M is generally some curved surface; for Berry's phase it is the space of parameters, and for the Aharonov-Anandan phase it is projective (density operator) space. The fibers are denoted by G; the typical fiber is a Lie group (and so also a manifold), and a copy of the typical fiber is attached to each point of M. The circuit C, defined on M, is the path followed by the parameters (or the density operator). This circuit is lifted to the bundle space by a connection; the image curve of the lifting process is generally open, as shown, but begins and ends on the same fiber. The difference between the beginning and ending points is the holonomy $\gamma(C)$, the geometric phase.

Figure 7 (a) Sample rotor used in Tycko's demonstration of Berry's phase (80). A single crystal of sodium chlorate is mounted in an air-driven rotor in zero magnetic field. The quadrupole moment of ^{35}Cl interacts with the local electric field gradient (EFG) in the crystal, which defines a quantization axis, shown as an arrow. As the sample rotates, the EFG axis reorients in a cone adiabatically (on the time scale of the ^{35}Cl quadrupole frequency), and the eigenstates acquire Berry phases. The phases are acquired at a constant rate, and are therefore manifested as frequency shifts. A radio-frequency coil around the spinner excites and detects the transitions. (b) More general trajectories, such as those shown in Figure 5(e) and 5(f), may be accomplished practically by means of a double-rotor (182), allowing the observation of non-Abelian geometric phases.

Figure 8 Nuclear quadrupole resonance (NQR) spectra of ^{35}Cl in a single crystal of sodium chlorate in zero magnetic field. ^{35}Cl is a spin-3/2 nucleus, so the quadrupole interaction splits the spin states into two degenerate pairs, $m = \pm 1/2$ and $m = \pm 3/2$. (a) NQR spectrum of the stationary sample, showing a single line at 29.94 MHz (the zero of the frequency scale). (b) NQR spectrum taken with the crystal undergoing the double-rotation circuit shown in Figure 5(f) using the rotor assembly sketched in Figure 7(b). Under double-rotation conditions the $m = \pm 1/2$ states are mixed by the non-Abelian gauge potential, Equations 50 and 51, while the $m = \pm 3/2$ states evolve under the Abelian gauge potential Equation 52. The non-Abelian interaction splits the transition into a five line spectrum (181). (c) simulation of the NQR spectrum in (b) based on experimental parameters of the double-rotation (rotation frequencies: inner rotor—2020 Hz; outer rotor—360 Hz).

Figure 9 Experimental results of Suter et al (189) showing the Aharonov-Anandan geometric phase. A two-level system is transported around circuits of various shapes (the cones, slices, and triangles of Figure 5), and is subsequently investigated by interference with a third unperturbed level. The geometric phase is one half of the solid angle subtended by the circuit for all shapes.

Figure 10 A "shape" in the abstract space of shapes, and a "located shape" with assigned position and orientation (236). The change in location of a swimmer at low Reynold's number, or the change in orientation of an object with no external torques, is a holonomy that depends on the circuit in (unlocated) shape space.

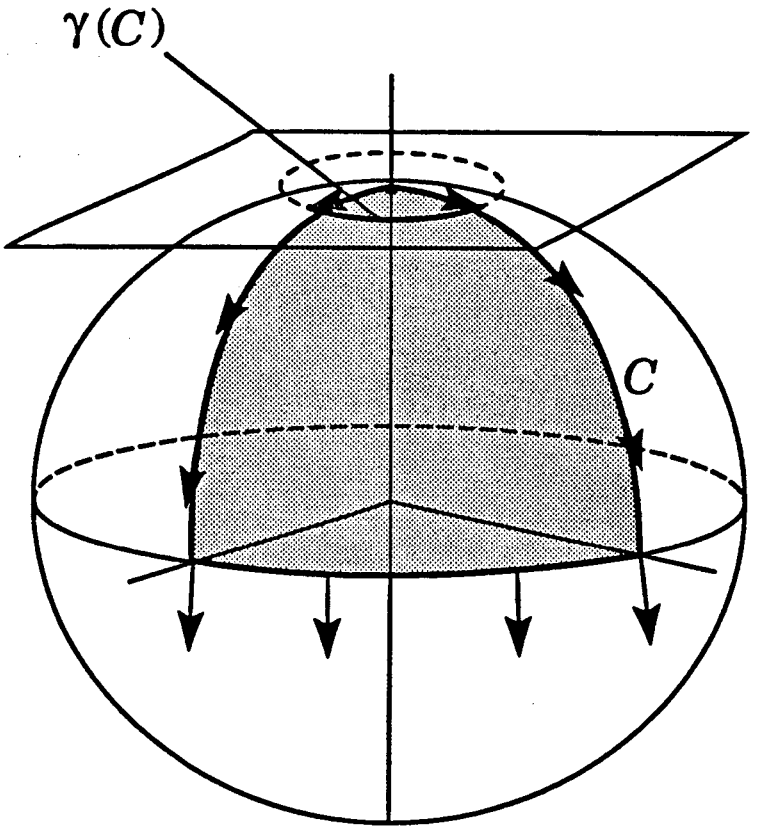

Figure 1

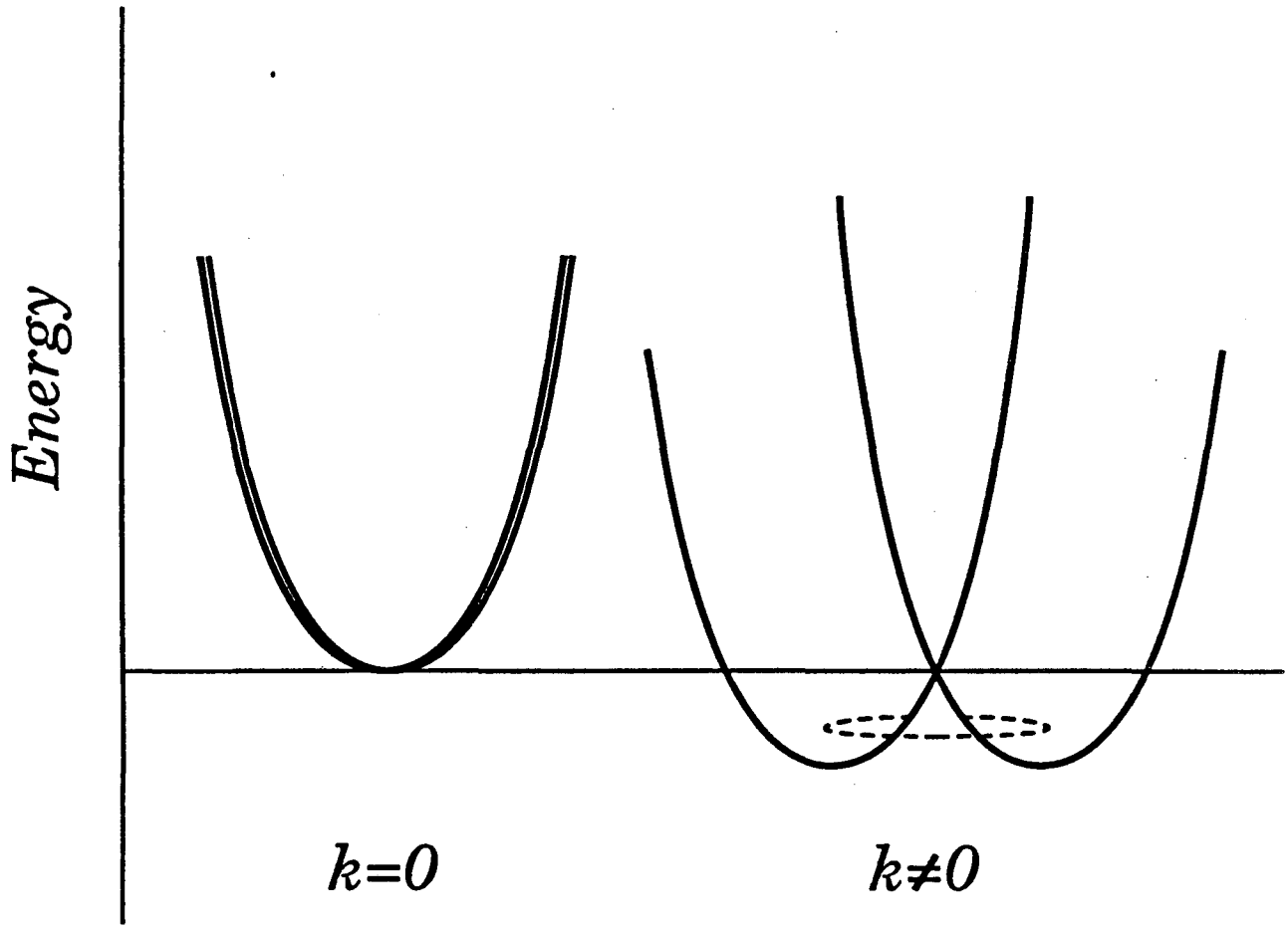

Figure 2

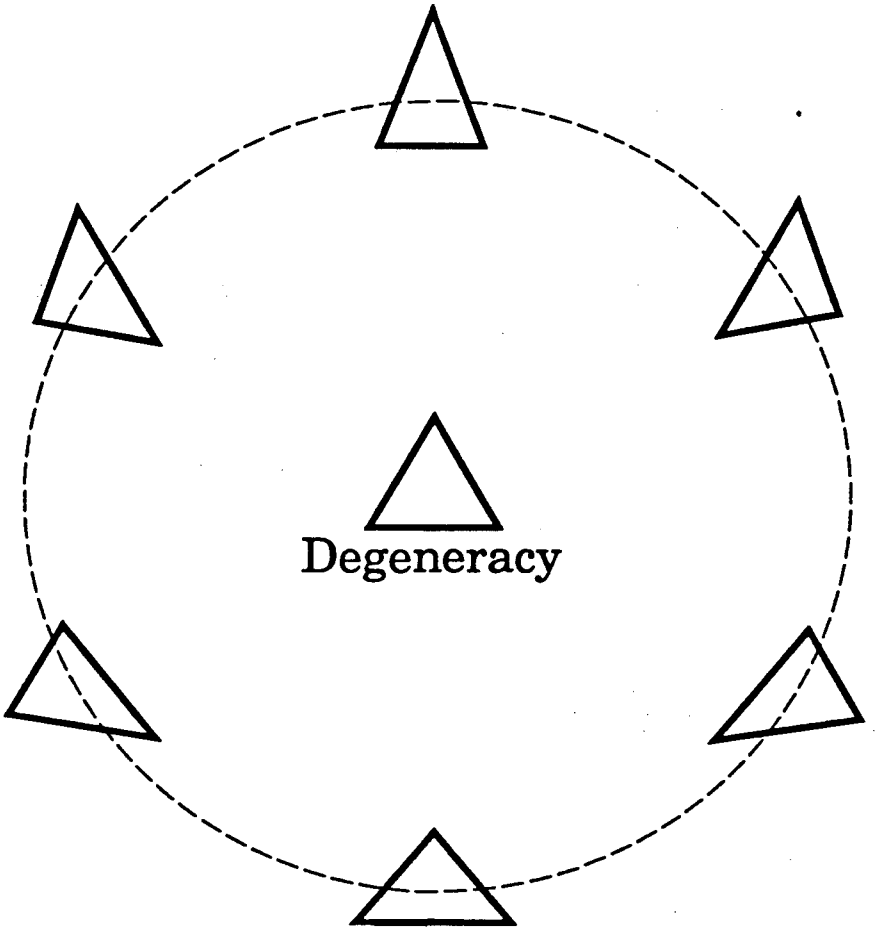

Figure 3

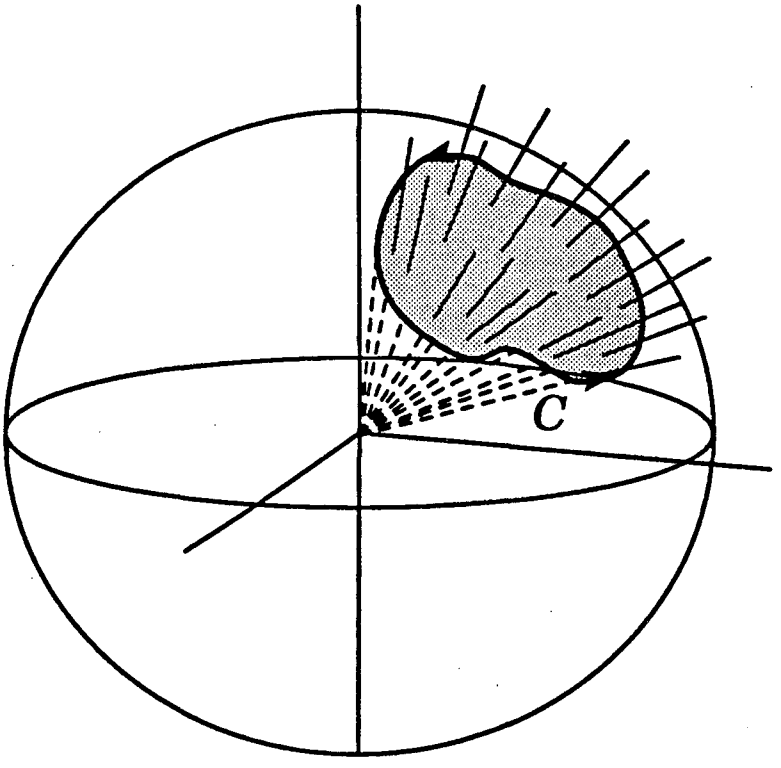

Figure 4

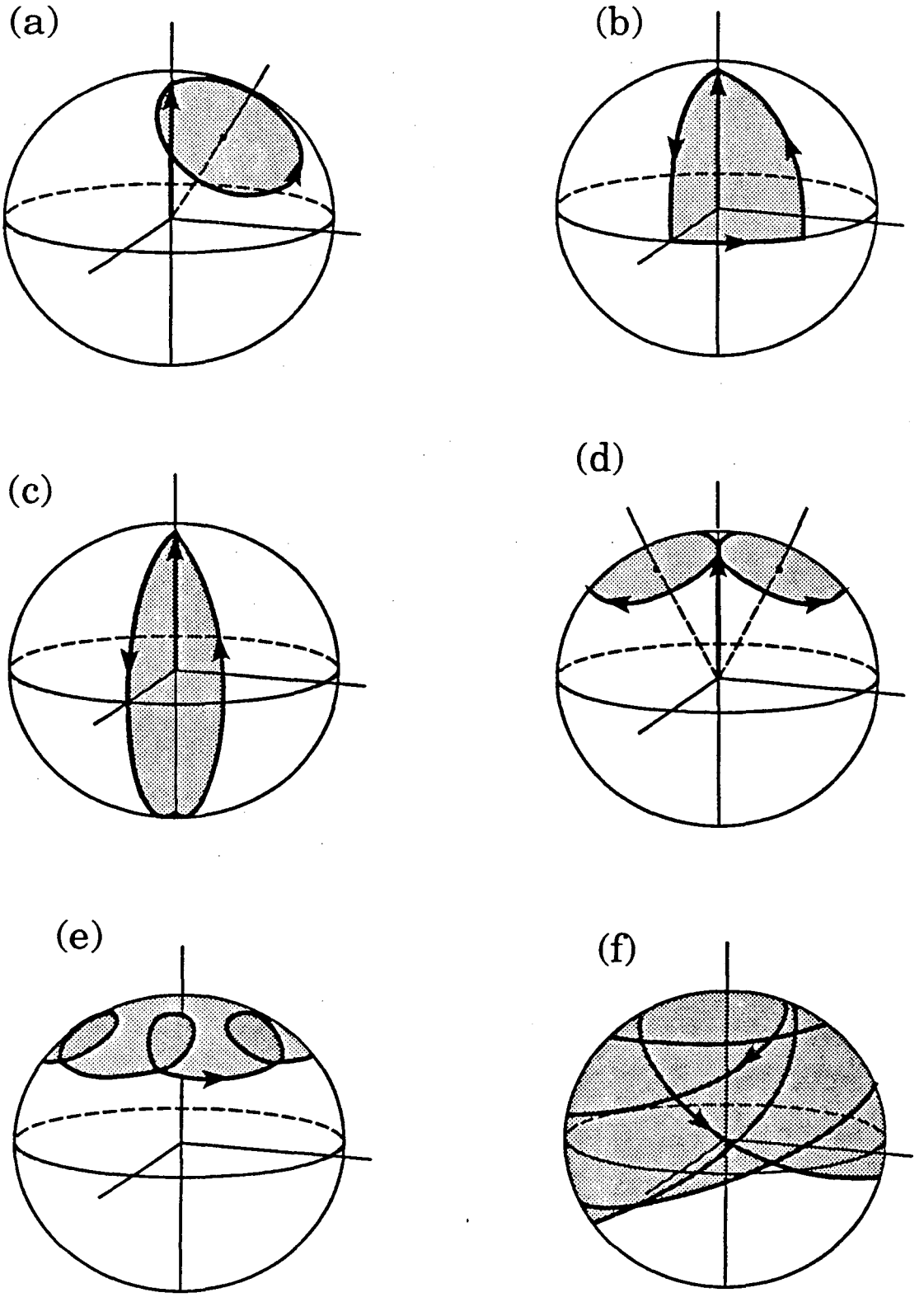

Figure 5

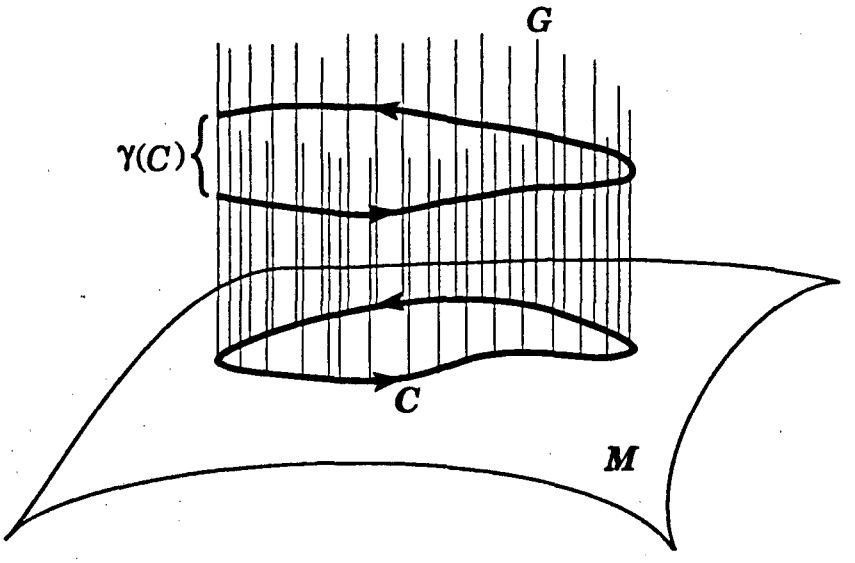

Figure 6

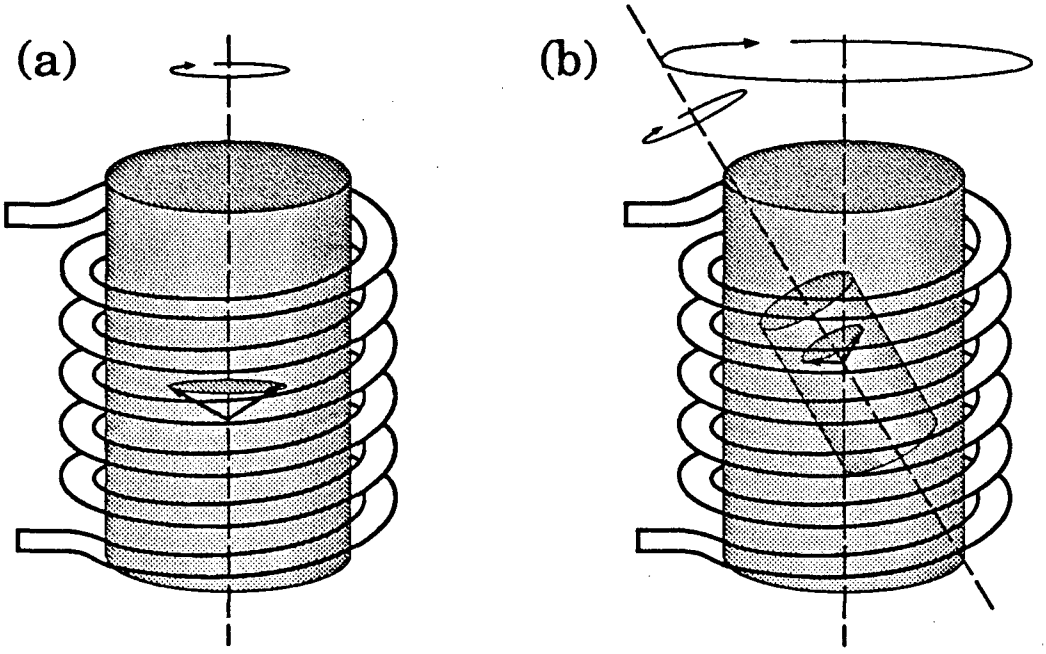

Figure 7

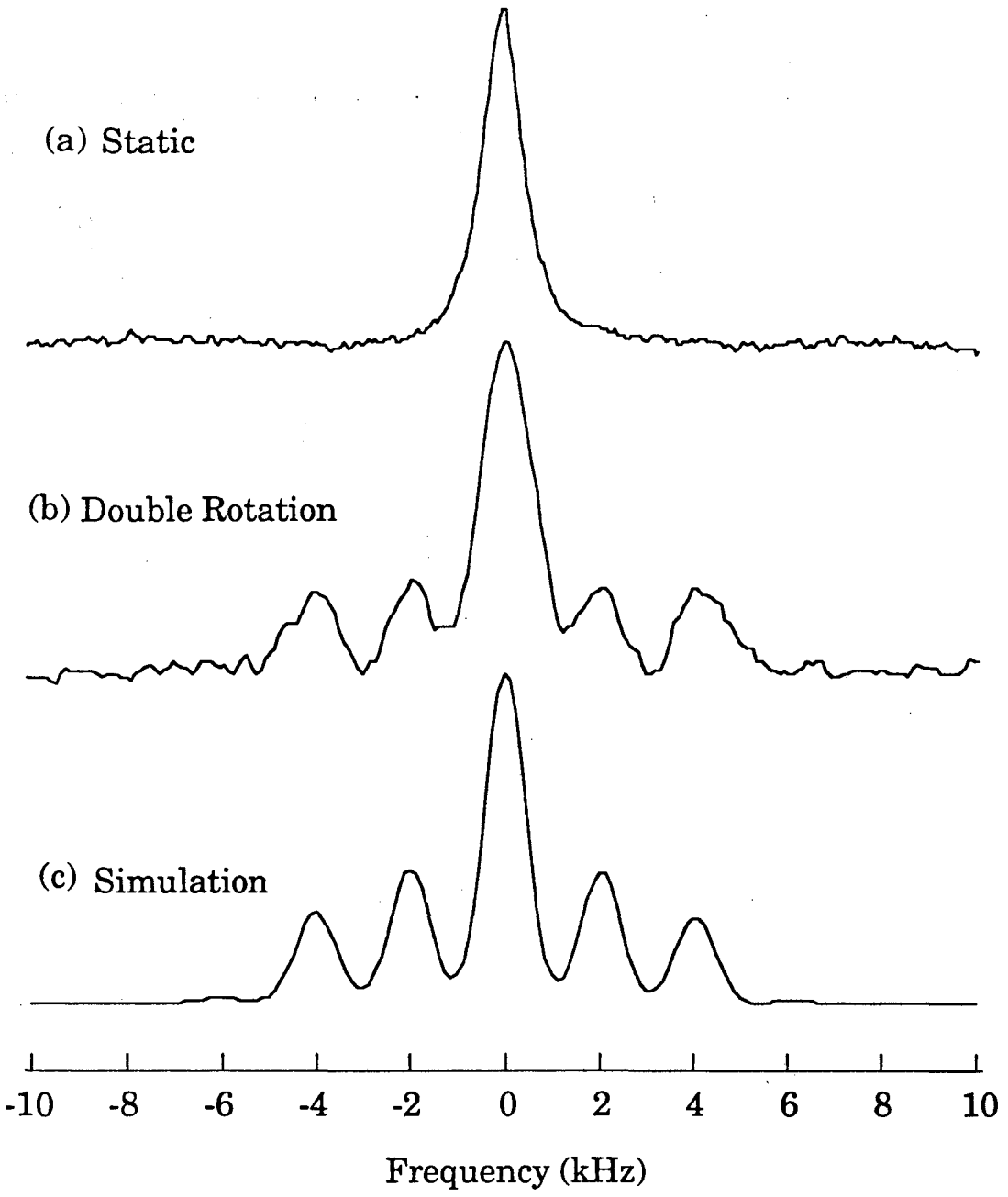
(a) Static
(b) Double Rotation
(c) Simulation
-10
-8
-6
-4
-2
0
2
4
6
8
10
Frequency (kHz)

Figure 8

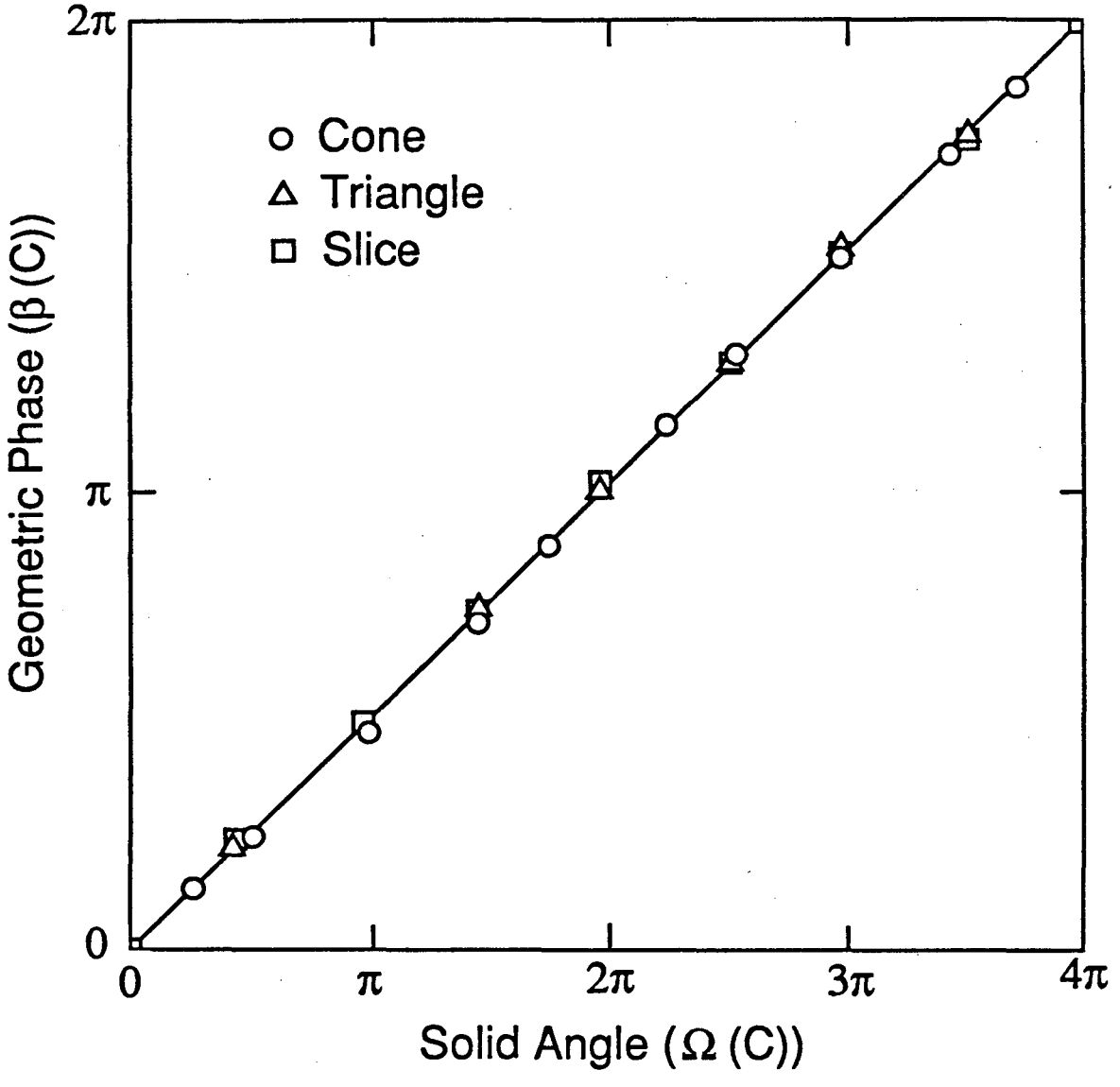
2π
π
0
Geometric Phase (β (C))
Cone
Triangle
Slice
0
π
2π
3π
4π
Solid Angle (Ω (C))

Figure 9

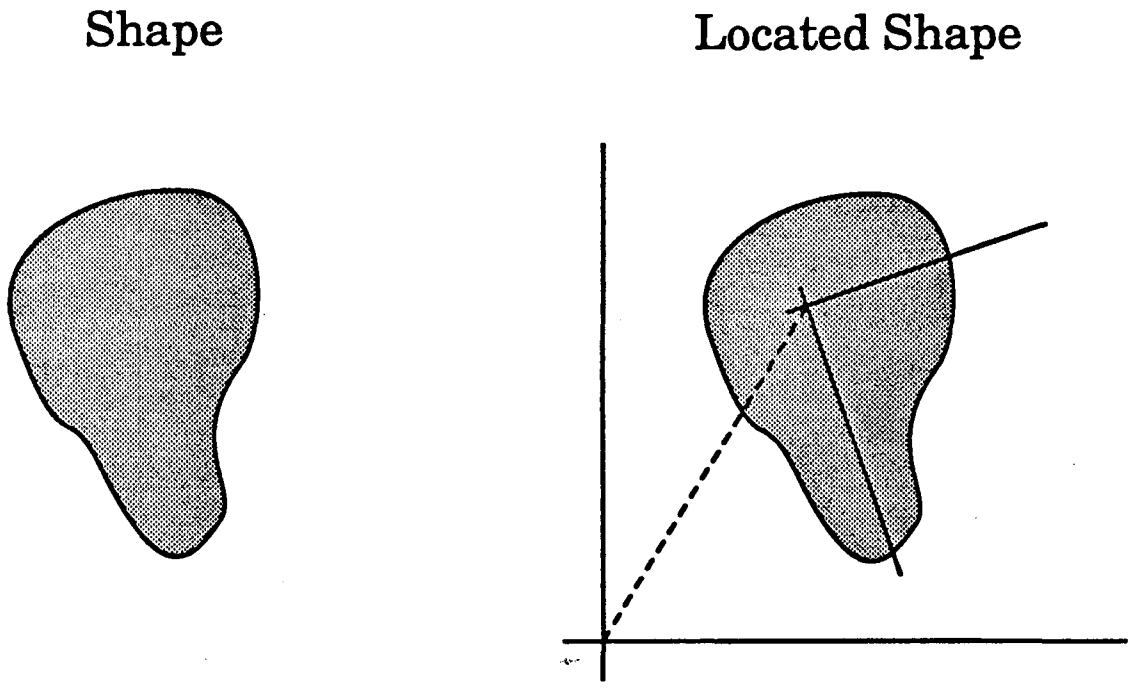

Figure 10

LAWRENCE BERKELEY LABORATORY
TECHNICAL INFORMATION DEPARTMENT
1 CYCLOTRON ROAD
BERKELEY, CALIFORNIA 94720