LBL-28739
UC-350

Lawrence Berkeley Laboratory

UNIVERSITY OF CALIFORNIA

Indoor Environment Program

1989 Annual Report

Applied Science Division

June 1990

LOAN COPY
Circulates
for 2 weeks
Bldg. 50 Library.
LBL-28739
Copy 2

Available to DOE and DOE Contractors from
Office of Scientific and Technical Information
P.O. Box 62, Oak Ridge, TN 37831
Prices available from (615) 576-8401, FTS 626-8401

Available to the public from
National Technical Information Service
U.S. Department of Commerce
5285 Port Royal Road, Springfield, VA 22161

Prepared for the U.S. Department of Energy under Contract No. DE-AC03-76SF00098

DISCLAIMER

This document was prepared as an account of work sponsored by the United States Government. While this document is believed to contain correct information, neither the United States Government nor any agency thereof, nor the Regents of the University of California, nor any of their employees, makes any warranty, express or implied, or assumes any legal responsibility for the accuracy, completeness, or usefulness of any information, apparatus, product, or process disclosed, or represents that its use would not infringe privately owned rights. Reference herein to any specific commercial product, process, or service by its trade name, trademark, manufacturer, or otherwise, does not necessarily constitute or imply its endorsement, recommendation, or favoring by the United States Government or any agency thereof, or the Regents of the University of California. The views and opinions of authors expressed herein do not necessarily state or reflect those of the United States Government or any agency thereof or the Regents of the University of California.

Indoor Environment Program
1989 Annual Report

Joan M. Daisey, *Program Leader*

Applied Science Division
Lawrence Berkeley Laboratory
University of California
Berkeley, California 94720
(415) 486-5001

LBL-28739

LAWRENCE BERKELEY LABORATORY
APPLIED SCIENCE DIVISION

DIVISION DIRECTOR
EJ CAIRNS

DIVISION ADMINISTRATOR
CA FRAGIADAKIS

DEPUTY DIVISION DIRECTOR
DF GRETHER

ASSISTANT DIVISION DIRECTOR
AT QUINTANILHA

DIVISION COUNCIL
EJ CAIRNS, Chairperson

PROFESSIONAL STAFF COMMITTEE
MA WAHLIG, Chairperson

CENTER FOR ATMOSPHERIC AND BIOSPHERIC EFFECTS OF TECHNOLOGY
AT QUINTANILHA, Director

CENTER FOR BUILDING SCIENCE
AH ROSENFELD, Director

ENERGY CONVERSION & STORAGE PROGRAM
EJ CAIRNS, Leader
HW BLANCH, Deputy
MA WAHLIG, Deputy

- **ELECTROCHEMICAL GROUP**
  EJ CAIRNS, Leader
  FR MCLARNON, Deputy
  K KINOSHITA
- **MICROSTRUCTURED MATERIALS GROUP**
  AJ HUNT, Leader
- **BIOTECHNOLOGY**
  HW BLANCH
  CJ KING
  CR WILKE
- **FOSSIL FUELS**
  RH FISH
  S LYNN
- **HIGH T_c SUPERCONDUCTOR PROCESSING**
  PH BERDAHL
  AJ HUNT
  MD RUBIN
  RE RUSSO

ENVIRONMENTAL RESEARCH PROGRAM
T NOVAKOV, Leader
NJ BROWN, Deputy

- **ATMOSPHERIC AEROSOL GROUP**
  T NOVAKOV, Leader
  AD HANSEN
  WH BENNER
- **COMBUSTION GROUP**
  NJ BROWN, Leader
  RK CHENG
  D LUCAS
  AK OPPENHEIM
  RF SAWYER
  L TALBOT
  RB WILLIAMSON
- **MEMBRANE BIOENERGETICS GROUP**
  L PACKER, Leader
  RJ MEHLHORN
  AT QUINTANILHA
- **FLUE GAS CHEMISTRY GROUP**
  SG CHANG, Leader
- **ECOLOGICAL SYSTEMS**
  J HARTE
  SL ANDERSON
- **ANALYTICAL CHEMISTRY**
  F ASARO
  RD GIAUQUE

INDOOR ENVIRONMENT PROGRAM
JM DAISEY, Leader
AV NERO, Deputy

- **INDOOR RADON GROUP**
  WJ FISK, Acting Leader
  RG SEXTRO
  AJ GADGIL
- **INDOOR ORGANIC CHEMISTRY GROUP**
  JM DAISEY, Leader
- **INDOOR AIR QUALITY STUDIES**
  WJ FISK
  GW TRAYNOR
  - VENTILATION
  - CONTROLS
  - EXPOSURE ASSESSMENT
- **ENERGY PERFORMANCE OF BUILDINGS GROUP**
  MH SHERMAN, Leader

ENERGY ANALYSIS PROGRAM
MD LEVINE, Leader
RL RITSCHARD, Deputy

- **ENERGY CONSERVATION POLICY GROUP**
  MD LEVINE, Acting Leader
  JE MCMAHON
  AK MEIER
  I TURIEL
- **BUILDING ENERGY ANALYSIS GROUP**
  RL RITSCHARD, Leader
  H AKBARI
- **INTERNATIONAL ENERGY STUDIES GROUP**
  L SCHIPPER, Co-Leader
  JA SATHAYE, Co-Leader
  AN KETOFF
- **BUILDING ENERGY DATA GROUP**
  JP HARRIS, Leader
- **UTILITY PLANNING & POLICY GROUP**
  EP KAHN, Leader
- **GLOBAL ENERGY/ ENVIRONMENTAL ISSUES**
  MD LEVINE
  WE WESTMAN

BUILDING ENERGY SYSTEMS PROGRAM
MA WAHLIG, Leader

- **BUILDING SYSTEMS ANALYSIS GROUP**
  RC KAMMERUD, Leader
  WL CARROLL
- **SIMULATION RESEARCH GROUP**
  FC WINKELMANN, Leader
- **ABSORPTION HEAT PUMPS**
  JE RASSON
  MA WAHLIG

WINDOWS & LIGHTING PROGRAM
SE SELKOWITZ, Leader

- **WINDOWS & DAYLIGHTING GROUP**
  SE SELKOWITZ, Leader
  JH KLEMS, Deputy
  MD RUBIN, Deputy
  CM LAMPERT
  - OPTICAL MATERIALS
  - FENESTRATION PERFORMANCE
  - BUILDING APPLICATIONS
- **LIGHTING SYSTEMS RESEARCH GROUP**
  SM BERMAN, Leader
  RR VERDERBER, Deputy
  DD HOLLISTER
  DJ LEVY
  - LAMP TECHNOLOGY
  - IMPACTS
  - LIGHTING CONTROLS

April 1990

Indoor Environment Program Staff

Joan M. Daisey,* *Program Leader*

F. Allard†
Michael G. Apte
Shih-Chin Chen
Andrea Cooper
Carol Corradi
Richard C. Diamond
Darryl J. Dickerhoff
V.B. Dorer†
David Faulkner
J. Fuerbringer†
Helmut E. Feustel
William J. Fisk*
Ashok J. Gadgil
Ted Gartner
David T. Grimsrud†
M. Grosso†
Lara A. Gundel
M. Herrlin†
Alfred T. Hodgson
Nori Hudson
Richard Jansky
Claude Khalizadeh
H.G. Kula†
F. Luckau†
L. Mingsheng†
Mark P. Modera
William Nazaroff
Anthony Nero
Timothy Nuzum
J.C. Phaff†
David Pih
Richard J. Prill
Kenneth L. Revzan
E. Rodríguez†
Rosa Rodríguez
Gregory San Martin
Gail Schiller
Richard G. Sextro
Max Sherman*
Brian V. Smith
Carol Stoker
Gregory W. Traynor
Y. Utsumi†
P.H. Wallman†
Alicia Woods
H. Yoshino†

*Group Leader
†Participating Guest

Contents

INTRODUCTION i

INDOOR ORGANIC CHEMISTRY

Source Strengths and Sources of Volatile Organic Compounds in a New Office Building 1
Interactions of Radon with Other Gaseous Indoor Pollutants 2
A Method for Sampling and Analyzing Polycyclic Aromatic Hydrocarbons in Indoor Air 3
Publications: Indoor Organic Chemistry Group 4

INDOOR RADON

Developing Indices of Potential Soil-Gas and ^{222}Rn Entry Through Substructure Surfaces; Assessing Techniques for Radon Measurement 5
Performance of Radon Control Systems 6
Monitoring and Modeling Radon Entry into Basements: Status Report for the Small-Structures Project 7
Spatial and Temporal Variation in Soil Radon and Air Permeability 8
Modeling Radon Entry into Houses with Basements: The Influence of Structural Factors 9
Modeling Radon Entry into Houses with Basements: Model Description and Verification 10
Publications: Indoor Radon 11

ENERGY PERFORMANCE OF BUILDINGS

Conjunction of Multizone Infiltration Specialists (COMIS): An International Workshop 12
Analysis of Uncertainty in Ventilation-Related Measurement Techniques 13
Research in the Efficiency of Existing Buildings 14
Standards for Infiltration and Leakage in Buildings 15
Economizer Rating 15
Residential Air-Distribution Systems 16
A System for Using Multiple Tracer Gases to Measure Interzonal Airflows 16

INDOOR AIR QUALITY AND CONTROLS

A Multitracer Technique for Studying Ventilation Rates, Air-Distribution Patterns, and Air Exchange Efficiencies 17
Exhaust-Air Heat Pump Performance with Unsteady-State Operation 18
Comparison of Conventional Mixing and Displacement Air-Conditioning and Ventilation Systems in U.S. Commercial Buildings 18
Macromodel for Assessing Residential Concentrations of Combustion-Generated Pollutants 19

Introduction

Approximately 38% of the energy consumed in the United States is used in buildings. Because humans spend an average of 85% to 90% of their time indoors, energy usage by the buildings sector can have a significant impact on human comfort, health and productivity. To advance energy conservation technologies while maintaining indoor air quality, research in the Indoor Environment Program is directed toward understanding relations between building energy (usage and technologies), indoor air quality, and human health, comfort, and productivity.

The Program addresses the issue of optimizing the health, comfort and productivity of a building's occupants in interrelated ways. The Energy Performance of Buildings Group investigates energy flow through all elements of the building shell. The group measures air infiltration rates, studies thermal characteristics of the structural elements, and develops models of building behavior, including infiltration models. Reduction of infiltration holds great potential for saving energy: the heat load associated with natural infiltration is about 2.5 quads per year, costing about $15 billion dollars annually. Thus, a 25% reduction of infiltration energy losses could save almost $4 billion dollars annually.

However, because ventilation is the dominant mechanism for removing pollutants found in buildings, reduced ventilation may produce undesirable effects on indoor air quality and on the health, comfort, and productivity of a building's occupants. This issue is an important theme for the research of other projects within the Indoor Environment Program. These projects include characterizing the emissions of various pollutant classes from their respective sources; studying the effectiveness of ventilation in removing pollutants from indoor atmospheres; and examining the nature and importance of the chemical reactions and physical removal mechanisms that affect the type and concentration of airborne pollutants. Program projects have focused on three major pollutant classes; radon and its progeny arising from radium in soils and from building materials (Indoor Radon Group); combustion products arising from indoor heaters and from combustion appliances (Ventilation, Indoor Air Quality and Controls); and organic pollutants arising from building materials, consumer products, furnishings, and soil gases (Indoor Organic Chemistry Group).

To understand the relations between these pollutants (i.e., their sources and dynamics) and building energy usage, the Program is developing models that clarify building energy use and losses, transport of pollutants into and within buildings, and exposure of humans to indoor air pollutants. The exposure modeling and analysis integrates much Program research and provides a broad overview of indoor air quality as well as a perspective on associated health risks.

The Ventilation, Indoor Air Quality and Controls, and Energy Performance of Buildings projects investigate techniques and strategies for controlling indoor air pollutant concentrations and develop devices for monitoring pollutants in the laboratory and in buildings.

The Program also interacts with other Programs within the Applied Science Division's Center for Building Science and its Center for Atmospheric and Biospheric Effects of Technology.

— *Indoor Organic Chemistry* —

Source Strengths and Sources of Volatile Organic Compounds in a New Office Building

A.T. Hodgson and J.M. Daisey

Nonspecific health problems associated with work environments are increasingly common among office workers. Although the agents responsible for these complaints remain largely unidentified, volatile organic compounds (VOC) are suspected to contribute to producing typical symptoms such as mucous-membrane irritation, headache, nausea, and dizziness. Because buildings with new interior finishes may have elevated concentrations of VOC, we began a study to identify the significant sources of VOC in a large new federal office building and to understand the effects of ventilation and aging on these sources.

The building studied had seven office floors and three separately ventilated basement levels containing a parking garage and loading dock. The building was instrumented for continuous monitoring of ventilation rate. Measurements of VOC were made on four occasions over a period of 14 months, beginning with first occupancy. Air samples, collected on multisorbent samplers, were analyzed for total volatile organic carbon (TVOC) and for individual VOC by thermal desorption, capillary gas chromatography, and mass spectrometry. Effective source strengths of TVOC and VOC were estimated using a single-compartment, mass-balance model.

Measurements of individual VOC were used in the identification of sources. The dominant source of VOC was found to be liquid-process photocopiers and plotters. Approximately 30 of these machines located throughout the building—often in open office areas—used a solvent consisting of C_{10} and C_{11} hydrocarbons. Concentrations of TVOC, dominant in these compounds, varied considerably over the course of the study; however, source strengths were more constant (Figure). Solvent emissions from this source totaled more than 2 kg/day. The other major source of VOC in the building appeared to be motor-vehicle exhaust emitted in the basement and transported to the upper building by interconnecting elevator shafts and stairwells. Contrary to expectations, contributions of new interior finish materials and furnishings to TVOC were relatively minor.

In addition to their use in identifying sources of VOC in buildings, our sampling and analytical methodologies and mass-balance approach facilitate studies of temporal variations in individual buildings as well as comparative studies of buildings. We are planning studies of additional commercial buildings, with the goal of adding to the scant baseline data on concentrations and on sources of VOC in this class of building.

Reference

Hodgson, AT, Daisey JM, Grot RA. Source strengths and sources of volatile organic compounds in a new office building. Paper 89-80.7. *Proceedings of the 82nd Annual Meeting of the Air and Waste Management Association, Anaheim, CA, June 25-30, 1989.* Pittsburgh, PA: Air and Waste Management Association, 1989.

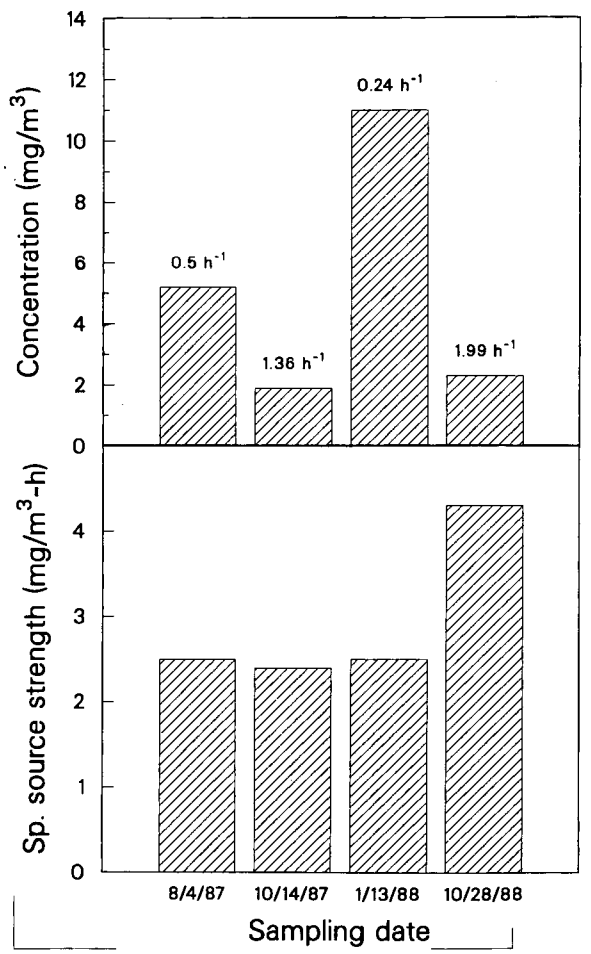

Figure. Long-term variations in the concentration and specific source strength of total volatile organic carbon. Ventilation rates are shown above concentration bars. (XCG 895-4651)

Interactions of Radon with Other Gaseous Indoor Pollutants

J.M. Daisey, N.J. Brown, A.T. Hodgson, D. Lucas, and R.G. Sextro

We have continued our research on the radiolytic interactions of radon and its progeny with other gaseous indoor pollutants. Such interactions—which may result in the formation of ultrafine aerosols and/or toxic gaseous products—affect both the subsequent behavior of radon progeny in indoor air and the risks from radon exposure. The objectives of our research are 1) to chemically characterize the gaseous and particulate products generated by radioactive decay of radon and its progeny in the presence of selected volatile organic compounds (VOC) in air; 2) to determine formation rates, distribution of particles by size, activity-weighted size and equilibrium factors for condensation nuclei products; and 3) to elucidate reaction mechanisms.

Small-chamber experiments were conducted in two types of chambers: Tedlar bags and paired Fourier-transform infrared (FTIR) analysis cells. The Tedlar bags were used for experiments with mixtures of radon and 2,3-dimethyl-2-butene (DMB) in air; the FTIR cells were used for experiments with mixtures of cyclohexene and inorganic gases in oxygen. The use of small Tedlar bags as reaction chambers was investigated to confirm results of previous large chamber experiments and to develop a system that could be used to survey a variety of volatile organic compounds (VOC). Calculations based on the simplified assumption of one organic molecule reacting per ion pair produced by radon decay suggested that our experiments might be in the appropriate range for reactions to occur.

We also used Fourier-transform infrared (FTIR) spectroscopy to develop a method for measuring the effect of alpha radiation on gas mixtures in small (0.5-liter) gas cells. Path lengths of up to 5.2 meters can be used, yielding detection limits of 0.1-1.0 ppm for most gas-phase species. A ^{224}Cm source is being used in these experiments to produce alpha rays with an energy (5.9 MeV) nearly equal to that of radon (5.8 MeV). The curium source has the advantages of being a solid with a high activity level (15 μCi) and long half-life (17.6 years). For each experiment, one cell without the alpha source served as a control. Testing the system by using a mixture of radon and vapor-phase ethanol at high concentrations gave the expected results: changes in the FTIR spectra over time showed the degradation of ethanol to CO_2 and H_2O.

In another series of experiments, we selected for study a model mixture from which photolysis was known to produce high yields of particles. Our approach involved comparing radiolysis and photolysis, focusing first on gaseous products (these are produced in larger quantities and are readily measured by FTIR). Our model mixture consisted of oxygen, cyclohexene, water, nitric oxide, and nitrogen dioxide (typically, the mixture contained 10 ppm each of NO, NO_2, and C_6H_{10} in oxygen at 1 atm). We have also performed photolysis using medium-pressure mercury lamps, measuring the intensity of the light from the lamp to permit comparison of the photon-induced reaction with the radiolysis-induced reaction.

For both radiolysis and photolysis, carbon monoxide was the major product measured in the infrared region. (Water vapor and carbon dioxide are also likely products, but atmospheric interference makes them difficult to measure by FTIR at low concentrations.) For both photolysis and radiolysis, the amount of carbon monoxide formed appears to be proportional to the energy absorbed by the system. We did not detect the presence of ozone, hydrocarbons, and binary nitrogen-oxygen compounds—other than the initial reactants—above their limits of detectability in the FTIR system. Samples of the gases in the cells were collected on multisorbent samplers and were analyzed by thermal desorption and GC-MS. This analysis did not detect the presence of VOC reaction products.

The photolysis experiment was duplicated with the same results. The radiolysis experiment has not yet been duplicated, but the amount of carbon monoxide formed was well above experimental uncertainties.

The results of experiments done to date have provided much needed information on experimental conditions and on sampling and analysis methods for investigating the interactions of radon and its progeny in the presence of ppm levels of other gaseous indoor pollutants. It is too early to speculate on the relation of these results to real indoor environments; our experiments, although conducted with organic compounds at ppm and sub-ppm concentrations, involved only very simple mixtures. In constrast, actual atmospheres in homes contain hundreds of compounds. Total concentrations of volatile organic compounds (for compounds containing more than four carbon atoms) range from about 1 mg/m^3 to 30 mg/m^3. Radiolysis-induced conversion of even 0.1 $\mu g/m^3$ to ultrafine particles (10 nm diameter) could generate more than 10^5 particles per cubic centimeter indoors.

A Method for Sampling and Analyzing Polycyclic Aromatic Hydrocarbons in Indoor Air

J.M. Daisey, A.T. Hodgson, L.A. Gundel, F.J. Offermann, and S.A. Loiselle**

Concentrations of polycyclic aromatic hydrocarbons (PAH) are often higher in indoor air than in outdoor air because of the presence of indoor combustion sources. Because this class of compounds contains potent carcinogens and because most people spend 85 to 90% of their time indoors, assessment of indoor exposures is essential for estimating public health risks attributable to these compounds. Although numerous studies have been conducted on PAH in outdoor air, existing data on indoor PAH concentrations are scant, partly because existing methods typically rely on high-volume sampling techniques inappropriate for use in most buildings. The purpose of our study was to develop and evaluate methods for sampling and analyzing both vapor-phase and particulate-phase PAH; methods found suitable could be used in a proposed large-scale study of residential indoor air quality. The study was designed 1) to provide adequate sensitivity to detect very low concentrations of PAH without losing the more volatile compounds present at much higher concentrations; 2) to provide sufficient precision to permit statistical evaluation of the data; and 3) to keep the method as simple and as practical as possible so that it can be used in a large field study.

To minimize the impact of sampling on indoor concentrations, a small sample volume of 25 m^3 was collected over 12 hours. The sampling apparatus was specially designed for constant flow and quiet operation. A sample of particulate-phase PAH was collected on a 47-mm glass fiber filter; a sample of vapor-phase PAH was collected on a sorbent cartridge placed inline after the filter (this cartridge contained 5 g of XAD-4 resin separated into two sections). The filter and the sorbent material were separately extracted and analyzed. Perdeuterated compounds were used in both procedures as surrogates for determining analyte recoveries and to provide internal standards for quantitation. Filter extracts were analyzed by reversed-phase, high-performance liquid chromatography with fluorescence detection. Sorbent extracts were analyzed by electron-impact gas chromatography and mass spectrometry.

In a pilot field study conducted in three houses and in two office buildings, the method was evaluated and ventilation rates were measured. Nineteen samples were collected indoors, and 16 samples were collected outdoors in the vicinity of the buildings. The sample set contained 11 pairs of duplicate samples, which we used to estimate overall precision for the method. The field study also produced data on source strengths and on sinks for PAH in indoor environments containing a variety of PAH sources, e.g. environmental tobacco smoke, wood smoke, and natural-gas combustion particles. The data are being analyzed and will be presented in 1990 at *Indoor Air '90*, an international conference on indoor air quality.

*Indoor Environmental Engineering, 3400 Sacramento Street, San Francisco, CA 94118

PUBLICATIONS: INDOOR ORGANIC CHEMISTRY

Daisey JM. Real-time portable organic vapor sampling systems: Status and needs. Chapter 16 In: *Advances in Air Sampling*. Lewis Publishers, Inc., Chelsea, MI, for the American Conference of Governmental Industrial Hygienists, 1988; 225-241. (also published as Lawrence Berkeley Laboratory Report LBL-25808)

Daisey JM, Hodgson AT. Initial efficiencies of air cleaners for the removal of nitrogen dioxide and volatile organic compounds. *Atmospheric Environment* 1989; 23:1885-1892. (also published as Lawrence Berkeley Laboratory Report LBL-27393)

Daisey JM, Spengler JD, Kaarakka P. A comparison of the organic chemical composition of indoor aerosols during woodburning and non-woodburning periods. *Environment International* 1989; 15: 435-442. (also published as Lawrence Berkeley Laboratory Report LBL-27211)

Daisey JM, Gundel LA, Wang L. *A Semi-Micro Soxhlet Extraction Method for the Determination of Extractable Particulate Organic Matter and Selected Polycyclic Aromatic Hydrocarbons*. Lawrence Berkeley Laboratory Report LBL-26712, 1989.

Hodgson AT, Daisey JM, Grot RA. Source strengths and sources of volatile organic compounds in a new office building. Paper No. 89-80.7 in *Proceedings of the 82nd Annual Meeting of the Air and Waste Management Association, Pittsburgh, PA, June 25-30, 1989*. (also published as Lawrence Berkeley Laboratory Report LBL-26950, 1989)

Daisey JM, LA Gundel. Tracing the sources of indoor aerosols using evolved gas analysis. Paper No. 89-145.3 in *Proceedings of the 82nd Annual Meeting of the Air and Waste Management Association, Anaheim, CA, June 25-30, 1989*. Pittsburgh, PA: Air and Waste Management Association, 1989. (also published as Lawrence Berkeley Laboratory Report LBL-27212, 1989)

Daisey JM. Buildings of the 21st century: A perspective on health, comfort and work productivity. Lawrence Berkeley Laboratory Report LBL-27213, 1989.

Garbesi K, Sextro R. Modeling and field evidence of pressure-driven entry of soil-gas into a house through permeable below-grade walls. *Environmental Science and Technology* 1989; 23:1481-1487.

— *Indoor Radon* —

Developing Indices of Potential Soil Gas and ^{222}Rn Entry Through Substructure Surfaces; Assessing Techniques for Radon Measurement

B.H. Turk , J. Harrison, R.J. Prill, and R.G Sextro*

To help researchers as well as private and commercial contractors to develop and install effective, efficient systems for long-term control of elevated ^{222}Rn in buildings, we have developed a number of procedures and measurement (diagnostic) techniques. The aims of these procedures are 1) to identify the source(s) of ^{222}Rn; 2) to understand the mecha-

(a)

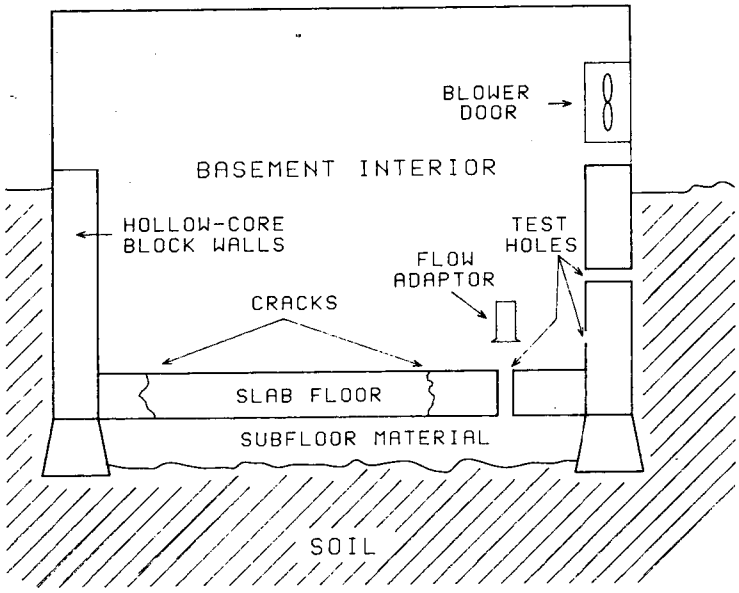

(b)

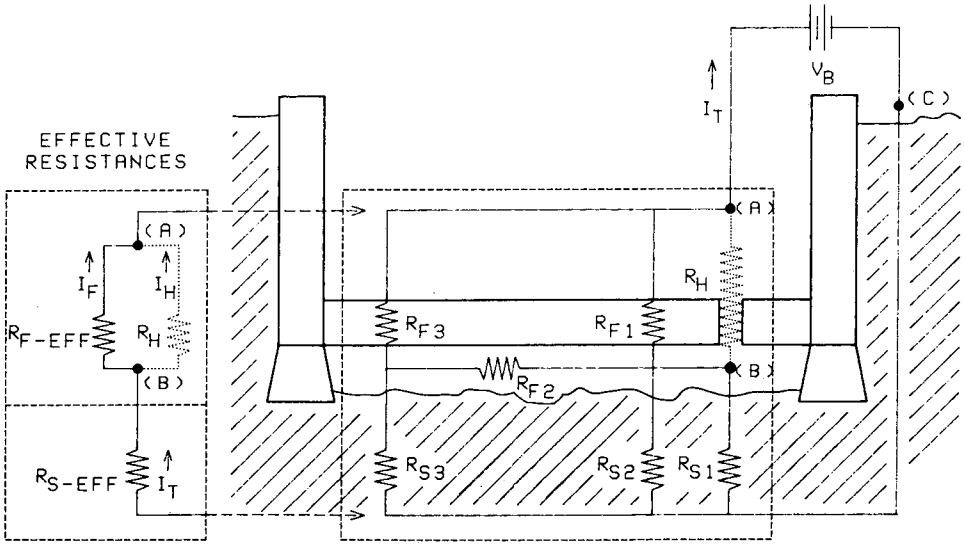

Figure. Schematics show aspects of measuring soil gas and radon entering buildings through substructure surfaces. (a) Substructure during pressure-field mapping and basement depressurization . (b) Simplified electrical analog of flow, pressure decrease, and resistance during the test depicted in (a). Dotted line indicates variables associated with an open test hole. Circuit at left shows a further simplification. (XBL 901-77)

*Now at 105 E. Marcy Street, Suite 109, Santa Fe, NM 87501.

nisms by which ^{222}Rn interacts with and enters the building; and 3) to select, design, and install an appropriate control technique that will effectively and economically reduce long-term ^{222}Rn levels to acceptable levels under changing conditions of environment and occupancy.

These procedures were evaluated at seven New Jersey houses during 1986 and 1987. Thorough visual inspections, tests of air leakage through blower doors, pressure-field mapping, tests of subsurface vacuum extension, sampling of ^{222}Rn concentrations throughout the substructure, and measurements of the additional depressurization caused by various appliances all furnished important information to contractors and researchers. Analysis of data from these and from other diagnostic techniques performed at seven houses indicated that 1) regions of high permeability existed adjacent to the exterior of substructure walls and floors; 2) the additional substructure depressurization caused by operation of forced-air furnaces and attic exhaust fans could exceed 1 Pascal; 3) ^{222}Rn concentrations below basement slabs and slabs-on-grade adjoining below grade basement walls were approximately seven times higher than those within block-wall cavities; and 4) air-leakage areas in substructure ceilings were as large as 0.15 m^2. The pressure-field mapping tests identified areas surrounding the substructure that were well coupled to the indoors. Using data on flow, pressure difference, and ^{222}Rn concentration, we developed indices of the entry potential of soil gas and ^{222}Rn to indicate the areas of the substructure that may have high entry rates for these. These indices could help quantify the relative resistance of substructure surfaces and surrounding soils to soil gas movement and could help determine the optimum placement for radon-control systems.

Performance of Radon Control Systems

B.H. Turk, J. Harrison, and R.G. Sextro

Five types of radon control techniques were tested in New Jersey houses with basements for effectiveness and for long-term performance: 1) subslab depressurization, or pressurization; 2) block-wall ventilation; 3) air-to-air heat exchange; 4) basement overpressurization; and 5) caulking of cracks and openings. Of these five techniques, subslab depressurization systems were found to be the most effective and suitable for long-term reduction in radon levels. By sealing accessible leakage openings, greater depressurization below the slab during system operation was achieved in many houses, although indoor radon levels were not affected.

Our study adds to the growing evidence that subsurface ventilation is often the most effective technique to reduce indoor radon levels. In general, these systems have continued to be effective for 2-1/2 years after completion of our initial research. In the depressurization mode, these systems reverse the natural pressure gradient across the substructure surfaces by creating lower pressures in the soils and in the aggregate surrounding the structure. Consequently, a greater vacuum in the subslab depressurization pipe or in the connection to distribution channels (perimeter drain ducts) extends the pressure field, allowing radon to enter the interior space at fewer locations and/or less frequently.

In contrast with our previous study in Spokane,Washington, subsurface pressurization proved to be much less effective than subslab depressurization in these New Jersey houses. A possible explanation for the difference is that radon concentrations in the soil gas around the New Jersey houses were much higher (19,000 Bq/m^3 to 3.7×10^6 Bq/m^3) than those in Spokane (3700 Bq/m^3 to 26,000 Bq/m^3).

The operation of blowers in the heating/air-conditioning system can add significant depressurization in the substructures of some buildings. Because this additional depressurization could overcome the pressure gradient created by subslab depressurization systems, these systems should be designed and tested with consideration given to heating/air-conditioning systems; alternatively, the latter systems should be modified to minimize the additional depressurization. In 1989, installation costs for subslab depressurization systems averaged $2270, and the estimated annual operating energy cost ranged from $85 (for houses heated by oil) to $250 (for electrically heated houses).

We successfully applied other radon-control techniques in special circumstances. Block-wall ventilation lowered indoor radon concentrations as effectively as did a competing subslab depressurization system in a house with block walls where we sealed off all large openings into the wall cavities. Basement pressurization was also effective where the basement was overpressurized by approximately 6 Pa. This technique is recommended only for houses whose substructures leak relatively little air; for houses that do not use forced-air heating/air-conditioning systems or vented combustion appliances upstairs; and for houses for which subslab ventilation is not suitable.

Monitoring and Modeling Radon Entry into Basements: Status Report for the Small-Structures Project

W.J. Fisk, S. Flexser, A.J. Gadgil, H. Y. Holman,* M.P. Modera, T.N. Narasimhan,* T. Nuzum, K.L. Revzan, R.G. Sextro, A.R. Smith,† Y.W. Tsang,* and H.A. Wollenberg**

The approach, status, and initial findings of a research project on radon transport through soil and entry into buildings are described. For the experimental component of this project, we constructed two room-size basements fabricated precisely at a site containing relatively homogeneous soil. Made distinct only by the presence or absence of a layer of aggregate beneath the floor, the structures have adjustable-size openings to the soil (otherwise, they are nearly airtight) and are mechanically ventilated using a system that also controls the indoor-outdoor pressure difference. Numerous probes, including a new type of permeability probe, were installed in the soil surrounding the structures to permit multipoint measurement of soil moisture content, soil temperature, permeability of soil to air, soil-gas pressure, and soil gas radon concentration. State-of-the-art instrumentation is being installed for real-time monitoring of these parameters and for the structure ventilation rate, indoor and entering concentrations of soil-gas radon, and meteorological parameters.

During the course of the measurements, many factors controlling or influencing radon entry will be modified intentionally or by changes in environmental parameters. Identical structures with the same instrumentation will be constructed at additional sites having various soil characteristics and climates. Core samples of the soil from each site will be analyzed to determine density, porosity, permeability, radium content, and radon emanation coefficient.

The research project also includes steady-state and transient numerical modeling efforts that complement the experimental research. Steady-state modeling has indicated that buoyancy effects on soil-gas flow (caused by heat loss from the substructure) and layers of subslab aggregate can greatly increase the rates of radon entry. We are also using a steady-state model to investigate the effects of a variety of structural and soil properties, including heterogeneous features of the soil. The model has also been used to determine that the broad range in soil permeabilities is consistent with the narrow distribution in indoor radon concentrations. Our transient numerical modeling focuses on evaluating the importance of transient soil-gas flow, primarily in response to temporal variations in atmospheric pressure. Preliminary results indicate that transient flow may be very important in low-permeability soils where radon entry caused by steady-state soil gas flow is limited. The modeling efforts, combined with the experimental findings, should substantially advance our understanding of the mechanisms of radon entry and the dependence of radon entry rates on soil, structural, and climatic factors.

*Earth Sciences Division, Lawrence Berkeley Laboratory
†Engineering Divisio, Lawrence Berkeley Laboratory

Spatial and Temporal Variation in Soil Radon and Air Permeability

R.G. Sextro and B.H. Turk

Soil is the predominant source of radon in most U.S. homes, particularly those homes containing high indoor concentrations of the gas. Indoor radon concentrations are governed by three factors: rate of radon production in the soil, air permeability of the soil surrounding the building substructure, and the coupling between the soil and the building interior. In order to evaluate the spatial and temporal variability of the first two factors, we measured soil permeabilities and soil-gas radon concentrations periodically as part of an intensive study of seven homes in New Jersey. Sampling probes were inserted in the soil concentrically around each house and were left at the same location throughout the study. Monitoring at the probes was done approximately every ten days for one year.

At some homesites, the observed spatial variation in permeability was about a factor of 20 or 30, centered around 5×10^{-11} m^2. At other homesites, the variations were as large as four orders of magnitude, within the 10^{-14} to 10^{-8}m^2 range Similarly, spatial variations in soil-gas radon concentrations were less than a factor of two at some homesites, averaging 50 kBq/m^3. At one homesite, the soil-gas concentrations ranged between 25 and 2000 kBq/m^3, almost a factor of 100. No systematic variations in soil permeability or in soil-gas radon concentrations were consistently observed as a function of distance from the house, however; in some probes located next to the houses, the radon concentrations seemed to be affected by the airflow drawn through the soil by the pressure gradient across the building shell.

The temporal changes in permeability and in soil-gas radon observed throughout the year were somewhat smaller: variations at a given sampling location ranged from less than a factor of two to a factor of ~90 in the case of permeability, and from less than a factor of three to a factor of ~40 for soil-gas radon concentrations. Some of these variations are likely to be caused by changes in the soil's moisture content, because this can have a marked effect on airflow through the soil. No reliable soil moisture data were acquired, however.

In similar but less extensive measurements in the Pacific Northwest, spatial variations in permeability and in soil-gas radon concentrations were much smaller—usually by a factor of two to a factor of five. The soil permeabilities in samples taken in the Pacific Northwest also averaged ~5×10^{-11} m^2, although average soil-gas radon concentrations were ~15 kBq/m^3, lower than the samples taken in New Jersey.

These data suggest that site characterization measurements, usually conducted once at a limited number of sampling sites, may be difficult to obtain in regions where spatial and temporal variations can be expected. Local conditions in the environment or in the house may also affect the measured quantities.

Modeling Radon Entry into Houses with Basements: The Influence of Structural Factors

K.L. Revzan and W.J. Fisk

When found in houses with basements, high indoor concentrations of radon are usually attributable to the entry of soil gas through openings in the subsurface part of the building shell. Factors determining the rate of radon entry may be associated with undisturbed soil or with the structure itself and with soil modifications made during construction. We have used a numerical model (described elsewhere) to determine the influence of the latter factors.

In this model, the symmetry of the situation allows the basement to be represented by a cylinder. The regions of primary interest are the building footer, a perimeter foundation that supports the walls; the walls themselves; the slab; a high-permeability layer of gravel that underlies the slab; an area of soil near the walls that has been replaced after removal for excavation; and any openings in the walls and slab, including the L-shaped opening between footer, slab, and wall. (Only cylindrically symmetric openings are discussed here.)

Under constant basement depressurization and soil conditions, the most important factor in radon entry is the permeability of the area immediately adjacent to an opening. In the case of the slab-footer gap, this region is the gravel layer. Assuming its permeability to be 5×10^{-9} m^2, the gravel layer can increase the rate of radon entry through the gap by as much as a factor of five compared with the rate of entry when gravel is absent. The thickness and radium content of the gravel layer exert little influence on radon entry. The presence of a high-permeability region near wall openings affects radon entry even less; in this case, the region usually extends to the soil surface, increasing the flow of air while diminishing the radon content. This situation leaves the entry rate essentially unchanged.

In addition to the slab-footer gap, openings in the slab may increase the radon entry rate by a factor of 1.5, depending on their location. The principal effect, however, is simply to redistribute the soil-gas flow. The distribution will depend mainly on the resistance of each opening to flow; this resistance depends on the width, length, and smoothness of the opening. Apart from its effect on flow distribution, this *crack resistance* exerts an important influence on radon entry only when the opening width is small (0.001 m) or, for wider cracks, when the soil permeability is very high (10^{-9} m^2).

If cracks in the walls are the primary paths of radon entry, as may be the case when concrete-block construction is used, the permeability of the soil replaced after completion of construction (i.e., permeability of the backfill) determines the convective entry rate of radon. The entry rate is determined almost completely by the permeability of this backfill, whereas the latter has little effect on radon entry through the slab-footer gap or through openings beyond the footer, i.e., in the slab. The undisturbed soil between the backfill and the opening merely redistributes the flow.

Modeling Radon Entry into Houses with Basements: Model Description and Verification

K.L. Revzan, W.J. Fisk, and A.J. Gadgil

A depressurized basement creates a pressure field in the surrounding soil. This field, in turn, produces a flow of air from the surface into the basement. During its passage through the soil, the air accumulates radon atoms which also enter the house. This air (also called *soil gas*) is the primary source of radon in houses that have high indoor concentrations of radon.

Soil-gas transport is described by two differential equations. Even when the boundaries of the basement region are simplified as much as possible, an exact solution of these equations cannot be found. Consequently, Loureiro developed a computer program in which the equations were discretized and solved algebraically for a region comprising the subsurface part of a basement wall and slab, a perimeter crack at the wall-slab junction, and the soil surrounding the basement. Loureiro's model is three-dimensional; because the problem can be made symmetrical in the horizontal plane without significant loss of generality, it has been modified to use cylindrical coordinates. In effect, the problem is now two-dimensional, allowing computing time to be reduced by a factor of 25-100.

The original model did not treat the region of the wall-slab junction realistically: the model did not account for the building footer (found in most houses), a perimeter foundation of concrete that supports the wall and underlies part of the slab. The crack through which radon enters the basement is L-shaped, because it includes slab-footer and slab-wall sections; we have now modeled this region correctly. Other openings in the basement shell may also be modeled.

The Loureiro model neglected the natural convection of air through soil. In winter, the basement is warmer than the outside air, whereas the soil at some distance from the exterior and from the basement is at an intermediate temperature. This temperature difference results in air circulation under the basement, possibly increasing the amount of soil gas that reaches the crack. We have added to the model a determination of the temperature field in the soil on the basis of a solution of the heat-transport equation that uses as boundary conditions the temperatures of the surface, deep soil, and basement. Using the temperature field as input, we have also modified Darcy's law to include natural convection. The solutions show that at high soil permeabilities, natural convection increases radon entry by as much as 66%.

To verify the model, we compared predicted entry rates with the rates found in seven houses with basements in the Spokane River valley of Washington and Idaho. For homogeneous soil whose permeability is equal to the mean measured value, the model predicted an entry rate that was approximately 40% as high as the mean of the observations. However, the introduction of even a very thin (0.01 m) high-permeability region under the slab increased the predicted entry rates. When the permeability of this region was 5×10^{-9} m^2, typical of gravels, the predicted entry rate was essentially equal to the experimental mean; if the permeability was made infinite, i.e., if the region became a gap, the prediction was 150% of the mean and 75% of the highest observed value. A slight increase in soil permeability produced predictions that could account for all experimental values.

PUBLICATIONS: INDOOR RADON

Nazaroff WW, Sextro RG. Technique for measuring the indoor ^{222}Rn source potential of soil. *Environmental Science and Technology* 1989; 23:451-458. (also published as Lawrence Berkeley Laboratory Report LBL-25886, 1989)

Turk BH, Prill RJ, Sextro RG, Harrison J. Intensive radon mitigation research: Lessons learned. In: *Proceedings of the 1988 Symposium on Radon and Radon Reduction Technology*. Research Triangle Park, NC: U.S. Environmental Protection Agency Report EPA 600/9-89/006a, vol. 1, pp. 6-25 to 6-44, 1989. (also published as Lawrence Berkeley Laboratory Report LBL-25910)

Revzan KL. Radon entry, distribution, and removal in two New Jersey houses with basements. Lawrence Berkeley Laboratory Report LBL-26830, 1989.

Nazaroff WW, Moed BA , Sextro RG, Revzan KL, Nero AV. Factors influencing soil as a source of indoor radon: Framework for assessing radon source potential. Lawrence Berkeley Laboratory Report LBL-20645, 1989 (Rev.).

Turk BH, Harrison J, Sextro RG. Performance of radon control systems. Lawrence Berkeley Laboratory Report LBL-27520.

Turk BH, Prill RJ, Grimsrud DT, Moed BA, Sextro RG. Characterizing the occurrence and variability of radon in Pacific Northwest homes. Lawrence Berkeley Laboratory Report LBL-26960, 1989.

Sextro RG, Lee DD. The performance of charcoal-based radon detection under time-varying radon conditions: Experimental and theoretical results. In: *Proceedings of the 1988 Symposium on Radon and Radon Reduction Technology*. Research Triangle Park, NC: U.S. Environmental Protection Agency Report EPA-600/9-89/006b, vol. 2, pp. 2-81 to 2-91, 1989. (also published as Lawrence Berkeley Laboratory Report LBL-27363)

Sextro RG, Nazaroff WW, Turk BH. Spatial and temporal variation in factors governing the radon source potential of soil. In: *Proceedings of the 1988 Symposium on Radon and Radon Reduction Technology*. Research Triangle Park, NC: U.S. Environmental Protection Agency Report EPA-600/9-89-89/006a, vol. 1, pp. 5-61 to 5-74, 1989. (also published as Lawrence Berkeley Laboratory Report LBL-27362)

Turk BH, Harrison J, Prill RJ, Sextro RG. Developing soil gas and radon entry potentials for substructure surfaces and assessing radon control diagnostic techniques. Lawrence Berkeley Laboratory Report LBL-27319, 1989.

Wollenberg HA , Revzan KL. Radium regionalization in California. *Geophysical Research Letters* (in press, 1989).

Schiller GE, Nero AV, Tien CL. Transport and deposition of indoor radon decay products: Part 1—Model development and validation. Lawrence Berkeley Laboratory Report LBL-28022, 1989. (also submitted to *Atmospheric Environment*).

Schiller GE, Revzan KL. Transport and deposition of indoor radon decay products: Part 2—Influence of environmental conditions. Lawrence Berkeley Laboratory Report LBL-28023, 1989. (also submitted to *Atmospheric Environment*).

Nazaroff WW, Teichman KY. Indoor radon: Exploring policy options for controlling human exposures. Lawrence Berkeley Laboratory Report LBL-27148, 1989. (also to be published in *Environmental Science and Technology)*

Nero AV, Gadgil AJ, Nazaroff WW, Revzan KL. Indoor radon and decay products: Concentrations, causes and control strategies. Lawrence Berkeley Laboratory Report LBL-27798, 1989.

Fisk WJ, Flexser S, Gadgil AJ, Holman HY, Modera MP, Narasimhan TN, Nuzum T, Revzan KL, Sextro RG, Smith AR, Tsang YW, Wollenberg HA. Monitoring and modeling of radon entry into basements: A status report for the small structures project. Lawrence Berkeley Laboratory Report LBL-27692, 1989.

Narasimhan TN, Tsang YW, Holman HY. On the potential importance of transient air flow in advective radon entry into buildings. *Geophysical Research Letters* (in press, 1989).

— Energy Performance of Buildings —

Conjunction of Multizone Infiltration Specialists (COMIS): An International Workshop

H.E. Feustel, F. Allard, V.B. Dorer, J. Fuerbringer, M. Grosso, M. Herrlin, L. Mingsheng, J.C. Phaff, E. Rodriguez, Y. Utsumi, and H. Yoshino

The COMIS workshop has been using a multinational team of experts to develop a reliable, smoothly running multizone infiltration model designed on a modular basis. After reviewing the available multizone infiltration models, we concluded that conventional models were not designed to be upgraded to take additional types of airflow into account or to be improved in terms of usability; therefore, we sought to designing and developing a model that will contain these missing features.

Acknowledging that the model's development would require expertise and staff exceeding our own resources, we publicized our plan and asked interested colleagues to join us for twelve months in order to lay the foundations for a versatile multizone infiltration model. Although this kind of cooperation is well established in other fields of research (e.g., high-energy physics), its use in COMIS represents a departure from typical research projects in the field of building physics. From the beginning, the COMIS idea was well received. Owing to the diverse background of the group, several national and international research programs have been working in coordination with the COMIS workshop.

COMIS not only takes into account airflow through cracks in a building's shell; the model being developed also considers airflow through large openings, single-sided ventilation, cross-ventilation, and heating/ventilation/air-conditioning (HVAC) systems. The model contains many modules peripheral to a steering program. The COMIS model can also be used as a basis for expanding the ability to simulate buildings.

We have given special emphasis to the input routines in order to maximize the final program's ease of use. The model is being developed in such a way that it can be used either as a standalone infiltration model or as an infiltration module of a building-simulation program. This design allows the user to connect the program with other software (e.g., with computer-aided design systems).

Computer code is expected to be available in April 1990; further work on the program—including validation—is planned. In addition, new knowledge from outside LBL will be available in the future (e.g, from IEA-Annex XX) and will be integrated into the program.

References

Feustel HE. Mathematical modelling of infiltration and ventilation. In: *Proceedings of the 10th AIVC Conference on Progress and Trends in Air Infiltration and Ventilation Research, Espoo, Finland, September 1989.* (also published as Lawrence Berkeley Laboratory Report LBL-27995, 1989)

Feustel HE , Allard F , Dorer VB , Grosso M , Herrlin M , Liu M, Phaff JC, Utsumi Y, Yoshino H. The COMIS Infiltration Model. In: *Proceedings of the 10th AIVC Conference on Progress and Trends in Air Infiltration and Ventilation Research, Espoo, Finland, September 1989.* (also published as Lawrence Berkeley Laboratory Report LBL-27996, 1989)

Feustel HE , Allard F , Dorer VB , Grosso M , Herrlin M , Liu M, Phaff JC, Utsumi Y, Yoshino H. The COMIS Infiltration Model. In: *Proceedings of Building Simulation '89, Vancouver, Canada, June 1989.*

Analysis of Uncertainty in Ventilation-Related Measurement Techniques

M.P. Modera, M.H. Sherman, and M. Herrlin

The study of ventilation in buildings includes direct measurements of ventilation rates as well as modeling of ventilation performance based on physical and operational characteristics of the building. Ventilation is measured directly using a variety of measurement techniques, whereas the building data needed for modeling (e.g., fan capacities and ducting/dampering arrangements) are sometimes obtained from building plans but are increasingly obtained by measurements—particularly for buildings ventilated by natural infiltration to measure air tightness. (The latter type of measurements include those that use fan pressurization.) Many measurement techniques are relatively new and need to be rigorously evaluated for accuracy, precision, and limitations. We have evaluated several techniques for measuring ventilation and airtightness.

Ventilation Measurement

The use of tracer gases for measuring ventilation rates involves measurement techniques of various complexities, ranging from single-zone (passive) to those that measure multizone air exchange in real time.

We evaluated several ventilation measurement techniques: one that uses passive tracer-gas injection and sampling, and several multizone techniques that use tracer gases. Passive tracer-gas techniques, typically used to measure long-term average rates of air change, measure the average tracer-gas concentrations that result from a constant rate of tracer-gas injection. Using simulations of actual ventilation conditions in two types of houses in six climates, our analyses indicated that our measurement of average ventilation rates tended to be biased, the degree of bias depending principally on variability of ventilation rate during the averaging period. Single-zone measurements using a single tracer-gas showed the largest biases, averaging approximately -20%.

We also analyzed the error of various techniques for measuring airflows in multizone buildings. Our analysis was applied 1) to integrated-concentration measurement techniques, e.g., the passive perfluorocarbon tracer technique; 2) to a real-time, single-gas constant-concentration system, which measures only the outdoor airflow rate into each zone; and 3) to a real-time multigas system. As expected, the results indicated that measurement precision was a function of the measurement technique's complexity and the expense of operation: the multigas system was more precise than the constant-concentration system, which was in turn more precise than the integrated-concentration system.

Airtightness Measurement

Measuring the airtightness of a building envelope using fan pressurization involves monitoring the fan flows required to maintain measured indoor-outdoor pressure differences; therefore, wind-induced pressure variations add uncertainty to the measurements. To elucidate this uncertainty, we performed a theoretical analysis of the effects of wind on fan-pressurization measurements and analyzed experimental data obtained (by the University of Alberta) to explore these effects. Our analyses indicated that wind-induced measurement uncertainties can be significantly attenuated using a four-wall, pressure-averaging probe combined with time-block averaging of pressure and flow data. In addition, analyses also demonstrated a wind-induced bias in airtightness measurements for both single-wall and four-wall average outdoor pressure measurements.

We have also completed a simulation-based uncertainty analysis of a technique for measuring the airtightness of the interface between adjacent building zones. This uncertainty analysis was performed using a detailed airflow network model (a precursor to the COMIS* model). The model was used to generate a representative sample of data that could be expected during measurements, including the effects of wind, wind turbulence, and equipment uncertainties. Our simulations indicated that 1) wind-induced uncertainties are very sensitive to the reference chosen for outdoor pressure, and that 2) using the best measurement protocol, the leakage uncertainties associated with the standard uncertainties in pressure and flow measurements are approximately eight times larger than wind-induced leakage uncertanties.

References

Herrlin MK, Modera MP. *Analysis of errors for a fan-pressurization technique for measuring inter-zonal air leakage. Presented at the 9th AIVC Conference, Ghent, Belgium, September 1988.* Lawrence Berkeley Laboratory Report LBL-24193, 1988.

Modera MP, Herrlin MK. *Investigation of a fan pressurization technique for measuring inter-zonal air leakage.* In: ASTM Special Technical Publication STP-1067, *Air Change Rate and Air Tightness in Buildings* (in press, 1989). (also published as Lawrence Berkeley Laboratory Report LBL-26255, 1989)

Modera MP, Wilson DJ. The effects of wind on residential building leakage measurements. In: ASTM Special Technical Publication STP-1067, *Air Change Rate and Air Tightness in Buildings* (in press, 1989). (also published as Lawrence Berkeley Laboratory Report LBL-25415, 1989)

Sherman MH. Uncertainty in air flow calculations using tracer gas measurements. Lawrence Berkeley Laboratory Report LBL-25415, 1989.

Sherman MH. Analysis of errors associated with passive ventilation measurement techniques. *Building and Environment* 1989; 24:131-139.

*see COMIS article, page 12.

Research in the Efficiency of Existing Buildings

R.C. Diamond, M.H. Sherman, and M.P. Modera

Because new buildings—residential and commercial—are becoming more energy efficient in response to higher energy prices and stricter energy codes, the existing stock of buildings has come to represent a large, unexplored area for energy conservation. The Existing Building Efficiency Research Program at LBL was initiated to address this problem in all three building sectors—single-family, multifamily, and commercial. The U.S. Department of Energy has designated LBL the primary laboratory charged with carrying out research in the multifamily sector; indeed, coordinated research in this sector has been emphasized in past years. In addition, however, we continue to study single-family and commercial buildings.

Protocol Development

The need for standardized procedures to monitor buildings has led to our developing a protocol for monitoring residential buildings. We used an early draft of the protocol to specify the monitoring procedures to be used in field tests of multifamily buildings in Chicago and Minneapolis/St. Paul; we then incorporated the experience gained at these monitoring sites into subsequent drafts of the protocol. Designed to provide a comprehensive standard for collecting data and for evaluating retrofit performance, the protocol is being used in the U.S. Department of Energy's competitive solicitation for existing buildings. A primary goal of the protocol work is to develop an ASTM and ASHRAE standard for monitoring buildings. The ASTM version is expected to be approved in 1990; the ASHRAE version is being incorporated into a new chapter (Chapter 45, on building monitoring) in the *1991 ASHRAE Applications Handbook.*

Audit Development

Although our protocol provides a guideline for long-term monitoring, practitioners and researchers also need short-term diagnostic tests to understand the characteristics of buildings shells and mechanical systems. In addition, practitioners need strategies for using basic diagnostic techniques. Our Multifamily Audit (developed under contract to Princeton University) gives the information necessary for determining appropriate retrofits for an individual building. Based on material developed jointly by Princeton and LBL, the audit outlines the steps necessary to evaluate, select, and analyze the performance of retrofits in a multifamily building.

Institutional Barriers

Widespread adoption of retrofits is often hindered by institutional barriers, including split financial incentives between owners and tenants, lack of information on the part of building managers, and a wide range of behavioral issues. Our work on institutional barriers involved a study of how energy retrofit affects the affordability of multifamily housing. This issue involves several important factors: location of the building, condition of the rental market, type of metering system used for the building (i.e., individual or master meters), and who pays for the retrofits. The results of this work were presented in October 1989 at a conference sponsored by the Alliance to Save Energy.

Technology Transfer

We have achieved successful technology transfer through collaborative monitoring projects in which information is exchanged between researchers and practitioners. In addition to our collaborative monitoring and demonstration projects, we publish our research results in professional and trade journals.

We have also been providing technical support to groups funded by the program under a competitive solicitation as well as through a collaborative monitoring project with a New York utility (Brooklyn Union Gas), the Alliance to Save Energy, and Oak Ridge National Laboratory. We plan to make the results of these projects available to our wide network of practitioners.

Standards for Infiltration and Leakage in Buildings

M.H. Sherman

Consensus standards play an important role in technology transfer. By incorporating research results into such standards, we can transfer techniques and practices developed at LBL to practitioners and can develop these techniques and practices into standard engineering practice. Usually, several years elapse between inception of a standard and its acceptance. We are involved in formulating and implementing several standards.

Through its committee on Infiltration Performance of Building Constructions (E6.41), the American Society of Testing and Materials (ASTM) has implemented several standards relevant for air infiltration. In November 1975, ASTM decided to develop standard practices relating to air infiltration: one relating to infiltration measurements using tracer gases, and one relating to use of fan pressurization to measure building airtightness. At this writing, the current versions of these standards are E741-83, *Standard Test Method for Determining Air Leakage by Tracer Dilution;* and E779-87, *Standard Test Method for Determining Air Leakage Rate by Fan Pressurization.* Since these two fundamental standards were completed, ancillary standards have been written: E1186-87, *Standard Practice for Air Leakage Site Detection in Building Envelopes;* and E1258-88, *Standard Test Method for Airflow Calibration of Fan Pressurization Devices.* The consensus process in this area is continuing, and a revision of E741 is underway. ASTM has actively supported technical efforts surrounding its standards by sponsoring symposia on air infiltration and by publishing the proceedings. The most current of these, *Air Change Rate and Air Tightness in Buildings,* documents the proceedings of a conference held in April 1989.

The International Standards Organization (ISO) is in the process of using ASTM standards as a basis for similar international standards. Currently, standards are being developed for measuring airtightness and for measuring tracer dilution.

Concerned with ensuring acceptable engineering practices in heating, ventilation, and air conditioning, the American Society of Heating, Refrigerating, and Air Conditioning Engineers (ASHRAE) in 1989 approved two standards relevant to our work: ASHRAE 62-1989, *Ventilation for Acceptable Indoor Air Quality;* and ASHRAE 119-1988, *Air Leakage Performance for Detached Single-Family Residential Buildings.* Current relevant ASHRAE standards under development involve ventilation efficiency and estimation of infiltration, both for use in indoor air-quality calculations.

Economizer Rating

H.E. Feustel, H.G. Kula, and F. Luckau

Eonomizers decrease the cooling requirements of buildings by using cool outdoor air instead of mechanically cooled air: outdoor and return air are mixed to maintain a ventilation cooling set-point if the outdoor temperature is below a certain limit. If the cooling set-point cannot be maintained by mixing the two airstreams, the supply air must be cooled mechanically. The rate of supplying outside air is reduced to its minimum if the temperature of the outside air exceeds that of the return-air or of the return-air enthalpy, depending on the control strategy used.

Economizers are designed either to integrate or to interlock mechanical cooling. Systems using integrated mechanical cooling allow economizer and mechanical cooling to operate concurrently. For non-integrated systems, the mode of mechanical cooling and the economizer mode are mutually exclusive. Because of the cooling characteristics of the economizer mode, only mechanical cooling systems with variable-load (part-load) operating capabilities can be used for integrated systems.

Our work has shown that the use of integrated economizers is beneficial for conventional air-handling systems that supply constant airflows. However, no economizer control strategy works best under all circumstances; whereas energy savings for some California climates are independent of control strategy, Southern California coastal climates require enthalpy control to maximize energy savings.

California's Energy Conservation Standard (Title 24) does not prescribe the control strategy to be used with the economizer. We have shown that the potential savings from economizer operation can vary greatly, depending on climatic conditions, the heating/ventilation/air-conditioning (HVAC) system installed, and the economizer strategy. In order to recommend specific control strategies for specific systems and climates, more detailed study is needed.

Residential Air-Distribution Systems

M.P. Modera

Approximately half of U.S. households have central warm-air furnaces and air-distribution ducts. This statistic translates into approximately one million miles of residential ducts. Given the widespread use of these ducts, and given the fact that they represent a vital link between houses and their space-conditioning plants, researchers regularly study the effectiveness of the energy use as well as the comfort associated with residential duct systems. Three potential inadequacies are usually identified with residential air-distribution systems: heat conduction through duct surfaces, leakage between ducts and their surroundings, and improper balancing of supply and return airflows.

Impact of Air Leakage in Ducts

We have examined and summarized the present state of knowledge concerning air leakage in duct systems. In particular, we have emphasized issues associated with leakage in residential air-distribution systems: prevalence of duct leakage, impact of duct leakage, and techniques available for sealing duct systems. We have examined in detail 1) present techniques for measuring the leakage area of ducts; 2) existing measurement databases relating to duct leakage area; 3) the impact of duct leakage on space-conditioning energy consumption and on peak demand; and 4) the impact of duct leakage on ventilation. We have also evaluated techniques for sealing duct systems in the field.

Results derived from duct leakage area, as well as driving-pressure measurements, indicate that for air-distribution systems passing through unconditioned spaces, air infiltration rates typically double when the distribution fan is turned on, and that the existence of the distribution system increases the average annual air-infiltration rate by 30% to 70%. Estimates based on simplified analysis of leakage-induced energy losses indicate that peak electricity demands attributable to duct leakage can be as high as 4 kW in West Palm Beach (Florida) and that peak loads of 1-2 kW are highly likely. Peak loads and annual energy impacts are found to depend strongly on the location of the return duct in the two climates examined, (Sacramento, California and West Palm Beach, Florida) an attic return costs approximately 1500 kWh more energy than does a crawlspace return in Sacramento, California.

Reference

Modera MP. Residential duct system leakage: Magnitude, impacts and potential for reduction. *ASHRAE Transactions* 1989; 95(II). (also published as Lawrence Berkeley Laboratory Report LBL-26575, 1989)

A System for Using Multiple Tracer Gases to Measure Interzonal Airflows

M.H. Sherman, H.E. Feustel, and D.J. Dickerhoff

Mass transfer caused by pressure-driven airflow is one of the most important processes to consider in determining both environmental quality and energy requirements in buildings. Heat, moisture, and contaminants are all transported by air movement between the indoor and outdoor environments, as well as between different zones within a building. Measurement of these airflows is critical to understanding the performance of buildings.

Virtually all measurements of ventilation are made using the dilution of a tracer gas. Most such measurements have been taken in a single zone, using a single tracer gas. In recent years, the need to determine ventilation rates and airflows in multizone buildings has become more acute, and many researchers have been investigting the problem. In some cases, clever control schemes have allowed some inferences to be drawn from a single tracer gas; however, full determination of the airflows requires multiple tracer gases. Multiple tracer systems developed to date tend to be limited due to response time, number of zones, or bias.

For the past several years, LBL has been developing the MultiTracer Measurement System (MTMS) designed to provide full, accurate, real-time information on multizone airflow. MTMS uses a quadrupole mass spectrometer to provide high-speed analysis of multiple tracer gases at low—

i.e., parts per million—concentrations. To do this, the tracer gases are injected into multiple zones using mass-flow controllers. The measurement and injection system, controlled by a personal computer, can 1) measure all concentrations in all zones within two minutes, 2) adjust the flow of injected tracer gases, and 3) operate unattended for weeks. The system can also assist in interpreting data by measuring related quantities such as weather and zonal temperature. MTMS uses a real-time algorithm to estimate airflows, both to improve control and to provide real-time information to the user. We use more detailed off-line analysis to provide more accurate estimates of the airflows.

MTMS has been in field operation since January 1988, has been used in two to five zone dwellings, and has been compared with other systems. Experimental conditions have ranged from steady driving forces to rapid changes; from poorly mixed zones to forced-air heating systems; and from poorly coupled apartments to tightly coupled single-family houses. Because the response time of the analysis is well under an hour, occupant effects such as door openings between zones can easily be seen. In addition, because the post-processing response time can be made quite short, even forced-air fan cycling can be observed. In all cases the system has proven able to maintain control and to provide data from which airflows can be calculated.

References

Sherman MH. On estimation of multizone ventilation rates from tracer-gas measurements. *Building and Environment* 1989; 24:355-362.

Sherman MH. Uncertainty in airflow calculations using tracer gas measurements. Lawrence Berkeley Laboratory Report LBL-25415, 1989.

Harrje D, Dietz R, Sherman MH, Bohac D, D'Ottavio TW, Dickerhoff DJ. Tracer Gas Measurement Systems Compared in Multifamily and Commercial Buildings. Atlanta, GA: American Society for Testing and Materials Special Technical Publication STP 1067, 1989.

— *Indoor Air Quality and Controls* —

A Multitracer Technique for Studying Ventilation Rates, Air-Distribution Patterns, and Air-Exchange Efficiencies

*W.J. Fisk, J. Prill, and O. Seppanen**

To investigate ventilation rates, age of air, spatial variability of ventilation, and air-exchange efficiencies in office buildings, we have developed a multitracer system that labels each incoming stream of outside air with a distinct tracer gas. Tracer gases are injected at a constant rate into each of these airstreams. Gas chromatography is used to monitor concentrations of tracer gases (as a function of time) in the major air streams of the air handlers. During injection of the gases, local samplers positioned at 15-20 locations in the occupied space collect samples of air and tracer gases in bags; when concentrations of the tracer gases have stabilized, samples are collected manually by syringe at the site of each local sampler. For each location where air is sampled, local ages of air (i.e., time elapsed since the air entered the building) are computed on the basis of either 1) the tracer concentrations in the syringe and bag samples, or 2) the real-time concentration data obtained by gas chromatography. We also compute the spatial-average age of air within the building; this is done using real-time data on the concentrations of tracer gas in the air streams exiting the building.

Based on preliminary estimates of measurement uncertainty, the air-exchange efficiencies observed in our study of a four-story office building did not differ significantly from the value that occurs under conditions of perfect mixing of indoor air. To check for one frequent cause of inefficient ventilation—short circuiting of air between ceiling-mounted supply diffusers and return grills—we measured the age of air versus height above the floor at several locations. In general, age of air did not vary significantly with this height; thus, our measurements suggested minimal short circuiting. The largest source of spatial variability of ages of air within the building appeared to be the use of two air-handling units and the physical subdivision of the building into different rooms and floors.

*Helsinki University of Technology, Helsinki, Finland.

Exhaust-Air Heat Pump Performance with Unsteady-State Operation

P.H. Wallman and W.J. Fisk

Ventilation using an exhaust-air heat pump (EAHP) is a residential mechanical ventilation technique widely applied in Scandinavia and to a lesser extent in North America. In this technique, a single fan draws exhaust air from several locations in the house (e.g., from bathrooms and from the kitchen), leading to a slight depressurization within the house. This depressurization causes an inflow of fresh air from the outside, either through unintentional leaks or (preferably) through adjustable registers located in the bedrooms and livingroom. Exhaust-air heat pumps use a refrigerant evaporator to extract energy from the exhaust airstream and then use a compressor and a condenser to transfer the energy to tap water or to indoor air. Some units have two condensers—one for heating water and one for heating the indoor space—and a switchable valve that determines which condenser is connected to the refrigerant compressor.

In our laboratory, we have studied experimentally the energy performance of two residential exhaust-air heat pumps with different condenser designs. We focused on transient heat—pump performance associated with time-varying requirements for heating water and space. Experimental variables included total required daily volume of hot water, schedule of hot-water demand, temperature of water entering the hot-water tank, temperature of hot water delivered, and temperature and flow rate of air entering the second condenser (i.e., the auxiliary refrigerant-heated fan coil), which was supplied to permit space heating. On the basis of our data, for a wide range of operating conditions, we derived linear correlations between the heat pumps' time-average coefficient of performance and appropriate spatial and temporal average temperatures in the hot-water tanks. With the refrigerant-heated fan coil, the coefficient of performance varied nonlinearly with rate of airflow. Coefficients of performance ranged from 2.0 to 4.2.

The control system of the exhaust-air heat pump equipped with two condensers gives priority to water heating. On the basis of several factors—our data, results from our previous hourly modeling of exhaust-air heat pump performance, data from field studies in Sweden, and new calculations—we have proposed a new control system that usually places priority on space heating and thus takes fuller advantage of the water tank's ability to store heat. We estimate that this proposed control system could increase annual energy recovery by approximately 1000 kWh in a Portland, Oregon house with an exhause-air heat pump. We estimate total annual energy savings attributable to operation of an exhaust-air heat pump in an all-electric Portland-area house (compared with the same house with electric-resistance space, and water heating, and no heat recovery from exhaust air) would be approximately 6000-7000 kWh.

Comparison of Conventional Mixing and Displacement Air-Conditioning and Ventilation Systems in U.S. Commercial Buildings

O. Seppanen, W.J. Fisk, J. Eto, and D.T. Grimsrud*

During the past few years, office buildings in the Scandinavian countries have introduced a new displacement air distribution system that supplies low-velocity air directly to the occupied zone and creates a displacement flow in the floor-to-ceiling direction. We have evaluated displacement air distribution systems and have compared their performance against that of traditional variable-airflow and constant-airflow systems in U.S. office buildings.

We have calculated the energy loads of a typical large U.S. office building in four representative U.S. climates—in Minneapolis, Seattle, Atlanta, and El Paso—using the DOE-2.1C building-simulation computer program. Hourly loads and weather data were entered into new computer programs that simulated system performance on an hourly basis. Energy consumption, air quality, thermal satisfaction, and system cost were calculated for three building zones (south, north,

*Helsinki University of Technology, Helsinki, Finland

and core) in each climate. Displacement systems were simulated using results from recent laboratory measurements.

The simulations indicated that displacement systems generally yield superior air quality and thermal comfort, compared with conventional systems that recirculate air. The energy consumed by displacement systems equipped with heat-recovery mechanisms or with variable air volume (VAV) flow control was similar to the energy consumed by conventional air distribution systems that recirculate air. However, the estimated first cost of displacement systems was substantially higher than the first cost of conventional systems when the maximum cooling load exceeded 13 Btu/h-ft^2 (40 W/m^2) and ceiling-mounted cooling panels were required. Our simulations indicated that indoor air quality can deteriorate significantly if the combination of minimum airflow and minimum entry of outdoor air into the air handler do not bring an adequate amount of outdoor air to each region of the building.

Macromodel for Assessing Residential Concentrations of Combustion-Generated Pollutants

G.W. Traynor, M.G. Apte, and B.V. Smith

A simulation model (also called a *macromodel*) was developed to predict distributions of concentrations of indoor air pollutants in specified homogeneous residences. Initial research has focused on predicting indoor concentrations of combustion-generated pollutants, e.g., CO, NO_2, and respirable suspended particles; however, this effort is part of a larger project to predict indoor air pollution concentrations for all key indoor pollutants including radon, volatile organic compounds, and hydrocarbons (e.g., polycyclic aromatic hydrocarbons).

Our combustion macromodel predicted indoor air pollution concentration distributions in four geographically distinct regions of the United States during each week of the year. The results generally showed higher indoor concentrations in the winter weeks and also showed the importance of individual source types on levels of indoor air pollutants. The highest predicted residential concentrations of CO and NO_2 were associated with wintertime use of unvented gas and kerosene space heaters. The highest predicted concentrations of respirable suspended particles were associated with indoor cigarette smoking and with the wintertime use of non-airtight wood stoves, radiant kerosene heaters, unvented convective space heaters that use gas, and malfunctioning oil furnaces that use a forced-air system.

Future research will address the sensitivity of our model with respect to its various input parameters. We will also increase the number of pollutants modeled.

References

Traynor GW, Apte MG, Carruthers AR, Jillworth JF, Prill RJ, Grimsrud DT, Turk BH. The effects of infiltration and insulation on the source strengths and indoor air pollution from combustion space heaters. *JAPCA* 1988; 38:1011-1015.

Traynor GW, Aceti JC, Apte MG, Smith BV, Green LL, Smith-Reisu A, Novak KM, Moses DO. *Macromodel for Assessing Indoor Concentrations of Combustion-Generated Pollutants: Model Development and Preliminary Predictions for CO, NO_2, and Respirable Suspended Particles.* Lawrence Berkeley Laboratory Report LBL-25211, 1989.

Projects described in this report were supported by the following sources:

• Assistant Secretary for Conservation and Renewable Energy, Office of Building and Community Systems, Building Systems Division of the U.S. Department of Energy

• Assistant Secretary for Conservation and Renewable Energy, Office of Building and Community Systems, Building Services Division of the U.S. Department of Energy

• Director, Office of Energy Research, Office of Health and Environmental Research, Ecological Research Division , U.S. Department of Energy

• Director, Office of Energy Research, Office of Health and Environmental Research, Human Health and Assessments Division, U.S. Department of Energy

• Director, Office of Energy Research, Office of Health and Environmental Research, Pollutant Characterization and Safety Research Division, U.S. Department of Energy

• Assistant Secretary for Environment, Safety and Health, Office of Environmental Analysis, U.S. Department of Energy

• Directorate of Health Sciences of the U.S. Consumer Product Safety Commission through Interagency Agreement CPSC-IAG-87-1282 with the U.S. Department of Energy

• U.S. Environmental Protection Agency, through Interagency Agreements DW89932609-01-0 and DW89931876-01-0 with the U.S. Department of Energy.

• Bonneville Power Administration ,under Contract No. DE-A179-86BP60326

• U.S. General Services Administration

• Air Resources Board of the State of California, under Contract No. A732-106

• Southern California Edison Company, under Contract No. C3508007

• Finnish Academy of Science

The COMIS project is supported by the following organizations:

• National Scientific Research Center (C.N.R.S.), 75700 Paris, France; French Agency for Energy Management (A.F.M.E.), 75015 Paris, France; Dept. for Environment Science and Technology, Politecnico di Torino, Italy; S.I.V. (Società Italiana Vetro) S.p.a., Italy; SECCO S.p.a., Treviso, Italy; Netherlands Organization for Applied Scientific Research, Division of Technology for Society, Department of Indoor Environment, Delft, The Netherlands; Miyagi National College of Technology, Japan; Tohoku University, Japan; Harbin Architectural and Civil Engineering Institute, Harbin, People's Republic of China; CIEMAT-IER, Madrid, Ministerio de Educacion y Ciencia, Madrid, as well as Escuela Superior de Ingenieros Industriales, Sevilla, Spain; The Swedish Council for Building Research, Stockholm, Sweden; Ecole Polytechnique Fédérale de Lausanne, as well as Eidgenoessische Materialpruefungs und Versuchsanstalt (EMPA), Abt. 176, Projekt ERL, NEFF, Switzerland; and by the Assistant Secretary for Conservation and Renewable Energy, Office of Building and Community Systems, Building Systems Division of the U.S. Department of Energy

All support was provided through the U.S. Department of Energy under Contract No. DE-AC03-76SF00098.

DISCLAIMER

This document was prepared as an account of work sponsored by the United States Government. Neither the United States Government nor any agency thereof, nor The Regents of the University of California, nor any of their employees, makes any warranty, express or implied, or assumes any legal liability or responsibility for the accuracy, completeness, or usefulness of any information, apparatus, product, or process disclosed, or represents that its use would not infringe privately owned rights. Reference therein to any specific commercial product, process, or service by its trade name, trademark, manufacturer, or otherwise, does not necessarily constitute or imply its endorsement, recommendation, or favoring by the United States Government or any agency thereof, or The Regents of the University of California. The views and opinions of authors expressed herein do not necessarily state or reflect those of the United States Government or any agency thereof or The Regents of the University of California and shall not be used for advertising or product endorsement purposes.

Lawrence Berkeley Laboratory is an Equal Opportunity Employer

Applied Science Division
Lawrence Berkeley Laboratory
University of California
Berkeley, CA 94720