UC 406

LBL-28848
Preprint

Center for Advanced Materials

CAM

Submitted to Review of Scientific Instruments

An Ultra-High Vacuum Scanning Tunneling Microscope for Surface Science Studies

D.M Zeglinski, D.F. Ogletree, T.P. Beebe, Jr.,
R.Q. Hwang, G.A. Somorjai, and M.B. Salmeron

For Reference

Not to be taken from this room

April 1990

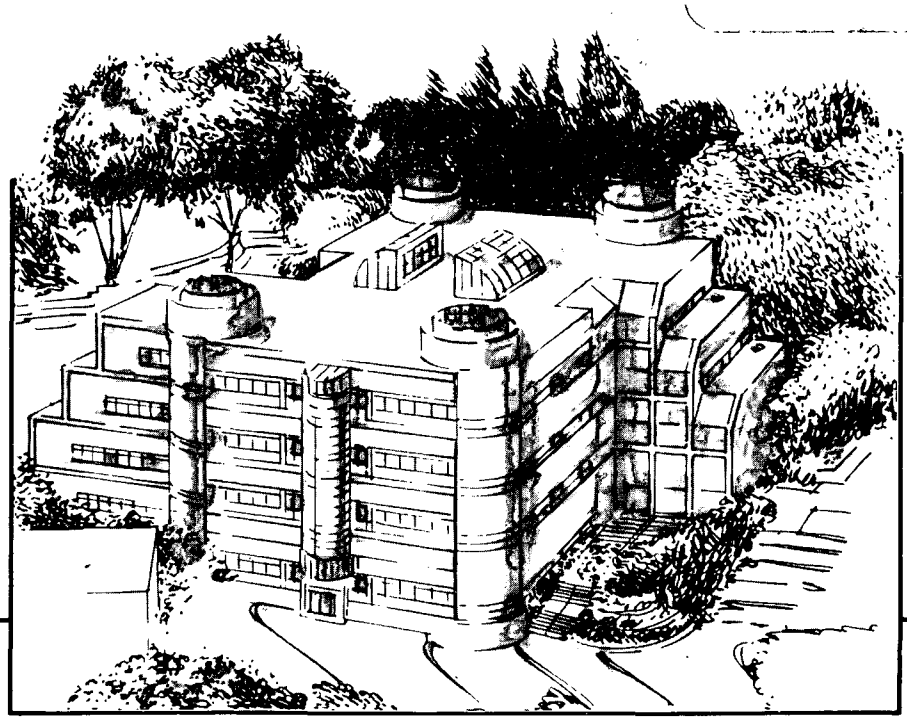

Materials and Chemical Sciences Division

Lawrence Berkeley Laboratory • University of California

ONE CYCLOTRON ROAD, BERKELEY, CA 94720 • (415) 486-4755

Prepared for the U.S. Department of Energy under Contract DE-AC03-76SF00098

LBL-28848
Copy 1
Bldg. 50 Library.

DISCLAIMER

This document was prepared as an account of work sponsored by the United States Government. While this document is believed to contain correct information, neither the United States Government nor any agency thereof, nor the Regents of the University of California, nor any of their employees, makes any warranty, express or implied, or assumes any legal responsibility for the accuracy, completeness, or usefulness of any information, apparatus, product, or process disclosed, or represents that its use would not infringe privately owned rights. Reference herein to any specific commercial product, process, or service by its trade name, trademark, manufacturer, or otherwise, does not necessarily constitute or imply its endorsement, recommendation, or favoring by the United States Government or any agency thereof, or the Regents of the University of California. The views and opinions of authors expressed herein do not necessarily state or reflect those of the United States Government or any agency thereof or the Regents of the University of California.

An Ultra-High Vacuum Scanning Tunneling Microscope for Surface Science Studies

D.M. Zeglinski, D.F. Ogletree, T.P. Beebe, Jr.,
R.Q. Hwang, G.A. Somorjai and M.B. Salmeron

Department of Chemistry
University of Califronia
and
Center for Advanced Materials
Materials and Chemical Sciences Division
Lawrence Berkeley Laboratory
University of California
Berkeley, CA 94720

This work was supported by the Director, Office of Energy Research, Office of Basic Energy Sciences, Materials Division of the U.S. Department of Energy under Contract Number DE-AC03-76SF00098.

An Ultra-High Vacuum Scanning Tunneling Microscope for Surface Science Studies

D. M. Zeglinski, D. F. Ogletree, T. P. Beebe, Jr.,[a),b)] R. Q. Hwang, G. A. Somorjai and M. B. Salmeron

Department of Chemistry, University of California, Berkeley 94720 and Center for Advanced Materials, Materials and Chemical Sciences Division, Lawrence Berkeley Laboratory, Berkeley, California 94720

In this paper we describe the construction and operation of a Scanning Tunneling Microscope (STM) designed in our laboratory that fits standard Ultra-High Vacuum (UHV) systems as an add-on instrument. Sample motion is accomplished by electrical signals, eliminating mechanical feedthroughs. Samples are easily transferred to a modified Varian manipulator for heating and interfacing with other surface science techniques. *In situ* tip replacement and sample transfer in and out of the UHV system is also possible.

Introduction

Typically, scanning tunneling microscope (STM) designs[1–6] are system specific,[7–9] and in general, adapting these instruments for surface science studies in commercial Ultra-High Vacuum (UHV) chambers is difficult. Our experiments require the preparation and characterization of ordered surface structures. This necessitates performing the experiments in UHV so that the traditional surface science techniques, Auger Electron Spectroscopy (AES) and Low Energy Electron Diffraction (LEED), can be used to provide information on surface chemical composition and long range order. An STM instrument must then permit transfer of samples from the microscope to the AES and LEED equipment. Surface preparation requires the ability to heat samples to approximately 2000 °C. For practical considerations, tip replacement and sample transfer from air to the vacuum chamber are needed without exposing the entire chamber to air. The instrument described in this paper will mount into a standard vacuum chamber with an off-axis manipulator. The sample can be disconnected electrically from the STM *in situ* so that the manipulator can perform the transfer motions.

The microscope design uses two concentric piezo tubes.[10] This geometry has been used previously for temperature dependent studies in air.[11] The tubes' outer electrodes are sectored into four equal quadrants in order to provide X-Y motion. The inner electrodes provide Z-displacement. The tip is held and scanned by the inner tube. The outer tube serves two functions: approach of the sample to the tip and large-scale sample displacement (2.5 μm for X and Y; 1.5 μm for Z). For both tubes, gain can range from 15 to 25 Å/V. Due to variations in piezo manufacture and sectoring, each tube must be individually calibrated for maximum accuracy. A graphite sample is imaged in UHV to calibrate the STM. The microscope is mounted on an eight inch conflat flange, and operates in conjunction with a vertical off-axis sample manipulator, a front view LEED screen and a single-pass cylindrical mirror analyzer. Sample transfer from air to UHV is done through a turbopumped airlock, and *in vacuo* replacement of up to six tips is possible.

In the following sections, the microscope head, vibration isolation system, sample and tip transfer, sample manipulator, and electronics/software package will be discussed in detail. Operation will be discussed, and images obtained in UHV will be presented.

1 Instrument Design

1.1 Microscope Head

The STM head consists of piezoelectric tubes[12] and a quartz sample holder (Fig. 1). The assembly is supported by a stainless steel plate. The head is fastened by machine screws to the plate through a Vespel[13] ring. Of the various ultra-high vacuum compatible polyimides available, Vespel was found to perform best due to its excellent machinability, high melting point (300 °C), and negligible outgassing at lower temperatures. Both piezo tubes are mounted to the Vespel ring with Torr-Seal[14] epoxy. The ring is designed so that the scan and approach/offset tubes are separable. This facilitates repair should only one tube require it. Tip wires are held by an aluminum collar which mates with a Vespel holder epoxied to the scan tube. The Vespel holder contains a 0.015 inch diameter, "M" shaped Cu-Be wire spring[15] that serves to retain the aluminum collar and provides electrical contact for the tip (Fig. 2). The tubular quartz sample support is joined with Torr-Seal to the offset/approach tube by a Vespel ring. A 0.0005 inch thick gold foil strip is epoxied to the top of the quartz tube. The foil hangs inside the quartz tube (see Fig. 1) making electrical contact with the tantalum sample holder. The light-weight foil does not interfere with the sample approach motion, and is not physically attached to the sample holder, allowing sample transfer.

Electrical contact to all piezo sectors, the Cu-Be tip retainer and the gold foil bias contact is provided by 0.006 inch diameter Kapton coated copper wire[15] soldered[16] to each electrode. This method is preferred since it is UHV compatible, bakeable, and provides a durable electrical contact. Electrical shielding for the wires is provided by passing the wires through a silver-coated, copper shield braid,[17] which is electrically grounded. Four

separate shield braids contain the conductors for the scanning tube, the offset/approach tube, the tip and the sample. Connection to the electrical feedthroughs is made by soldering to each wire a gold-coated, copper contact pin.[18] The connections then allow easy removal of the entire head from the support/vibration isolation system.

1.2 Vibration Isolation

1.2.1 Microscope Head

Our instrument uses three stages of vibration isolation.[19] Two stages are used for the in-vacuum instrument assembly (Fig. 3). The STM head is mounted to a stainless steel baseplate which rests on three layers of alternating silicone cord[20] and stainless steel plate. The bottom plate is suspended from a stainless steel cantilever by Cu-Be springs.[21] Viton o-rings, connecting the springs on each side of the microscope, are used to increase the effective spring length, and to provide high frequency damping. The cantilever is fastened to an eight inch conflat flange. The combination of stacked plates and metal springs filters out high frequency vibrations and reduces the amplitude of low frequency mechanical vibrations transmitted through the flange.

1.2.2 Ultra-High Vacuum Chamber

The STM is mounted in a standard stainless steel Varian bell jar attached to a Multi-VacIon pumping well by a 12 inch Wheeler flange (Fig. 4). The background pressure after a 16 hour bakeout at 100 °C is typically 5.0×10^{-10} torr. The third isolation stage uses three air table legs[22] to raise the entire chamber from the floor. The three isolation stages function well together, allowing imaging of lateral features one to two angstroms apart and corrugations less than 0.1 Å. In this system, the lowest resonance detected in the tunneling current occurs at 3 Hz.

1.3 Tips and Tip Transfer

Much effort has been directed towards characterizing, preparing and understanding STM tips.[23–27] We have experimented with etched tungsten and mechanically cut Pt/40% Rh tips. The mechanically cut tips have worked as well as the etched tips, but are easier to prepare. In addition, the platinum/rhodium alloy is extremely resistant to oxidation. The geometry obtained by mechanical cutting provides a sufficiently sharp tip structure. The 0.040 inch diameter tip wire is held by spring tension in an aluminum collar (see Fig. 2). The collar fits into the Vespel holder epoxied to the front of the scanning tube.

Tips are tranferred by a "wobble-stick"[28] from a Vespel carousel (see Fig. 3). The carousel is secured to the tube support plate opposite the scanning tube. A tip is transferred by removing it from the carousel, and then directing it along the center-line of the concentric piezos. The wobble-stick and tip pass through the carousel, the tube support plate, and the inside of the scanning tube. The collar is then pushed into the Vespel tip holder. The Vespel parts serve to guide the wobble-stick to the tip holder. A clamping mechanism, using a linear motion feedthrough to push the microscope assembly into a positioner, secures the STM during tip transfer.

1.4 Sample Holder and Tip-Sample Approach

The sample holder consists of a 0.500 inch diameter tantalum rod to which four 0.125 inch diameter sapphire ball bearings[29] are mechanically attached (Fig. 5). Stainless steel has been used previously, but tantalum is found to cool after sample heating roughly three times faster. Also, tantalum is twice as dense as stainless steel. This mass increase seems to improve sample approach/retract performance. Sapphire is used since it is hard, thus resisting damage from repeated sample holder motions. A hole is bored in the rod to accommodate the manipulator. The approach mechanism requires a low center-of-gravity sample holder, so the top is machined flat. The sample is mounted over the bored hole on one face of the holder by spot welded Ta

strips. The sample holder rests on the quartz tube extending from the outer piezo. Quartz is preferred over other materials since it is transparent, allowing visual assessment of tip-sample approach, and possesses a low thermal expansion coefficient.

A sample is brought into tunneling range via a stick-slip mechanism.[11,30] An approach waveform, as illustrated in Figure 6, is applied to the inner electrode of the approach piezo. The outer sectors are held at ground. The digital waveform consists of two parts. A linear ramp extends or contracts the piezo, depending on polarity. A sharp step returns the piezo to its original length. During the first part, the sample holder maintains static friction and retracts from or approaches towards the tip. The second part of the waveform breaks static friction, but the sample holder's inertia allows it to remain stationary while the piezo is in motion. Tunnel current is monitored before each digital increase of the ramp and after each sharp step. Variable parameters are overall ramp height, step size and delay before tunnel current detection. Current sensing cannot be continuous since the voltage change induces current spikes. After a delay that allows the spike to decay, the tunnel current is read and checked against a limit before waveform generation continues. The curvature in the waveform results from the response time of the high voltage power supply. The waveform is repeated until a pre-determined tunnel current is detected by the electronics. Once tunnel current is detected, control is turned over to the offset supply and feedback electronics. With this mechanism, a sample can be brought rapidly (2 mm/min) and reliably into tunneling range without mechanical linkages, and is easily transferrable to the sample manipulator for other surface studies.

1.5 Sample Manipulator

The sample manipulator is a modified Varian Model 981-2523 providing X-Y-Z translation, 360° rotation, and sample tilt capability. A 90° arm assembly was designed to fit the rotary motion feedthrough, and is pictured in Figure 7. The nozzle protruding from the arm supports the sample holder through its

bored hole. For sample heating, an electron bombardment heating filament exists in the nozzle, and is controlled by an emission regulated power supply. To reach 2000 °C typical heating parameters are 40 mA emission current and -2000 V filament bias. The filament is wound from 0.020 inch diameter tungsten wire, and is isolated from the stainless steel assembly by an alumina "two-bore" tube. The sample holder is held in contact with the nozzle by a spring-loaded lever to prevent accidental detachment during transfer motions. The manipulator linear motion feedthrough is used to depress the lever allowing release of the sample holder. Electrical contact for the filament and ground are provided through the manipulator flange. An optical pyrometer is used to measure sample temperature, while a thermocouple spot-welded to the sample clamp monitors sample holder temperature.

Since the tantalum sample holder is in contact with the stainless steel manipulator arm, cooling in vacuum occurs very slowly. Since the microscope is sensitive to thermal drift, large temperature gradients between sample and tip make imaging difficult at low scan rates. Quick cooling of the sample to minimize surface contamination and to prevent large thermal drift is necessary. After heating, the sample holder is put in contact with a liquid nitrogen cooled copper block (see Fig. 7). The block is V-shaped, and the cylindrical sample holder makes line contact in the "V". Cooling from 2000 °C to ambient temperature is done in about twenty minutes.

1.6 Sample Transfer

Samples can be introduced into the vacuum chamber from air through a turbopumped[30] airlock (Figs. 4 and 8). A fixture that accepts the sample holder is mounted to a 32 μin surface finish stainless steel rod. A teflon thrust ring applies pressure to a Viton piston seal[31] contacting the rod. The rod can then be extended and retracted through a gate valve without significant vacuum loss. The rod is extended into the chamber, then the sample manipulator accepts the sample holder from the fixture. If the vacuum chamber is at a base pressure of 10^{-10} torr, the pressure will rise to 10^{-8} torr during

sample transfer. Base pressure is easily recovered upon closing the gate valve, and the process takes approximately fifteen minutes, including evacuation of the airlock.

2 Electronics and Software

The STM electronics have been designed and built in collaboration with the Electronics Engineering Division of the Lawrence Berkeley Laboratory. To minimize input capacitance, bias is applied to the sample holder, and the tip is connected to an external current-voltage preamp[32] held at virtual ground. The pre-amp circuit bandwidth is 50 kHz and provides a first stage gain of 10^6 V/A. An integral clock-driven digital ramp generator produces X-Y scan waveforms. All piezos are driven by high voltage op-amps.[33] An analog proportional/integrator feedback loop controls the tip/sample separation. The electronic noise measured with the sample out of range is 0.2 pA/$\sqrt{\text{Hz}}$ for this configuration. Current and topographic data is collected by a 12-bit analog/digital I/O card[34] residing in an IBM-PC compatible 80386/7 computer. Data can be aquired at a maximum scan rate of 250 Hz, but typical operating parameters are: 1-4 Hz (topographic mode) and 60 Hz (current mode). The data is displayed by an enhanced VGA card[35] (640×480 pixels, 256 colors) on a color monitor.The software[36] has been written in our laboratory, and allows real time data analysis and display. Additionally, it allows simultaneous acquisition of two image parameters. For example, both Z position, and lock-in amplifier output from modulation experiments can be obtained during a raster for comparing topographic and barrier height data. The feedback loop may also be interrupted during a scan for simultaneous topographic and I-Z or I-V imaging.

3 Experimental Results

To illustrate the performance of our instrument, we show in Figure 9a a topographic image of the sulfur ("$3\sqrt{3}\times3\sqrt{3}$")R30° structure on the Re(0001) surface prepared in this UHV system.[38–40] The image is 93×93 Å, and was

acquired using -0.050 V sample bias and 22.1 MΩ gap resistance. The superlattice basis consists of trimers in which the sulfur atom spacing duplicates the Re lattice distance of 2.8 Å. The overlayer lattice is formed from alternating rows of back-to-back and "zig-zag" trimers. A diagonal grain boundary can be seen in the lower left-center portion of the image. This grain boundary consists of alternating sulfur tetramers (individual atom spacing is also 2.8 Å) and single sulfur atoms. The residual noise in the image is less than 0.1 Å. Figure 9b is a current image obtained from a Re(0001) surface prepared with a sulfur overlayer giving a sharp p(2×2) LEED pattern. The image is roughly 50×50 Å, and was taken using a -0.061 V sample bias. The corrugation maximum occurs at 12.1 nA, and the average current for this image is 3.6 nA. While most of the sulfur is arranged as a p(2×2) lattice, in this particular area, a mixture of sulfur arrangements is observed. Sulfur atoms 2.8 Å apart appear as trimers and dimers. Single sulfur atoms are also visible. Since this structure type, in small patches, could never be detected with LEED, this particular example shows the importance of using STM in surface science studies. The results presented here will be described in more detail in future publications.[40]

Summary

An Ultra-High Vacuum compatable Scanning Tunneling Microscope has been built for surface science studies. The STM design is compact, mounted on an eight inch conflat flange, and can be used in most commercial vacuum chambers. Tip replacement is possible *in vacuo*, and sample transfer is provided by a simple modification of a commercial manipulator so that standard surface science techniques can be used in conjunction with the microscope.

Acknowledgement

We are deeply indebted to members of the LBL technical staff for years of support and useful suggestions. They are: [machine shop] Weyland Wong (sample transfer and manipulator), Dan Colomb (wobble-stick), Chip Flor,

Bob Wright and Tony Tammer, [electronics shop] Joe Katz (STM electronics), Mike Press, Jim Severns (electron bombardment heater supply), Hank Brendel, Gary Tabler and Bob Ybarra, [optics shop] Rodney Post (piezo cutting and sectoring), [vacuum technology] Peter Ruegg, and [metallurgy] John Holthuis, James Wu, and John Jacobsen. This work was supported by the Director, Office of Energy Research, Office of Basic Energy Sciences, Materials Division of the U.S. Department of Energy under Contract Number DE-AC03-76SF00098.

References

a) Present address: Department of Chemistry, University of Utah, Salt Lake City, UT 84112

b) Visiting from Lawrence Livermore National Laboratories, L-357, Livermore, CA 94550

1. R. M. Feenstra, W. A. Thompson, and A. P. Fein, Phys. Rev. Lett. **56**, 608 (1986); J. Vac. Sci. Technol. A **4**, 1315 (1986).

2. J. A. Golovchenko, Science **232**, 48 (1986).

3. S. Chiang, R. J. Wilson, Ch. Gerber, and V. M. Hallmark, J. Vac. Sci. Tech. A **6**, 386 (1987).

4. D. W. Abraham, H. J. Mamin, E. Gantz, and J. Clarke, IBM J. Res. Develop. **30**, 493 (1986).

5. J. E. Demuth, R. J. Hamers, R. M. Tromp, and M. E. Welland, IBM J. Res. Develop. **30**, 397 (1986).

6. M. Salmeron, B. Marchon, S. Ferrer, and D. S. Kaufman, Phys. Rev. B **35**, 3036 (1987).

7. B. Drake, R. Sonnenfeld, J. Schneir, P. K. Hansma, G. Slough, and R. V. Coleman, Rev. Sci. Instrum. **57**, 441 (1986).

8. S. A. Elrod, A. L. de Lozanne, and C. F. Quate, Appl. Phys. Lett. **45**, 1240 (1984).

9. A. P. Fein, J. R. Kirtley, and R. M. Feenstra, Rev. Sci. Instrum. **58**, 1806 (1987).

10. G. Binnig and D. P. E. Smith, Rev. Sci. Instrum. **58**, 1688 (1986).

11. J. W. Lyding, S. Skala, R. Brockenbrough, J. S. Hubacek, and G. Gammie, J. Microscopy **152**, 371 (1988).

12. Channel Industries, Inc., Santa Barbara, CA. Channel 5500, 0.875 in. O.D. × 0.500 in. long × 0.040 in. wall (approach/offset tube). Channel 5500, 0.500 in. O.D. × 0.500 in. long × 0.040 in. wall (scan tube).

13. E. I. DuPont de Nemours & Co., Wilmington, DE. Vespel SP1 rod.

14. Varian Associates, Vacuum Products Division, Lexington, MA.

15. California Fine Wire Co., Grover City, CA.

16. Eutectic Co., Flushing, NY. EutecRod 157. This is UHV compatible solder consisting of ~98% Ag, and contains no Cd, Zn or low melting point metals. Acid flux must be used during soldering, and a conventional soldering iron is sufficient for attaching the 0.006 inch wire to the piezos.

17. Alpha Wire Co., Elizabeth, NJ. $\frac{1}{16}$ in. I.D. This method is preferred since it eliminates virtual leaks which could occur from tightly wound coaxial cable.

18. These are 17 Series pins used in Amphenol D-shell electronic connectors.

19. M. Okano, K. Kajimura, S. Wakiyama, F. Sakai, W. Mizutani, and M. Ono, J. Vac. Sci. Technol. A **5**, 3313 (1987).

20. Parker Seal Group, Lexington, KY. Part 2-395 S604-70, $\frac{3}{16}$ in. cross section.

21. The springs are wound on a mandrel chucked into a lathe. Spring parameters are: $\frac{1}{32}$ in. wire dia., 0.302 in. dia. mandrel, 30 turns. The springs are encapsulated in a helium atmosphere (460 torr) then tempered for 1 hour at 300 °C.

22. Newport Co., Fountain Valley, CA. Model XJ-A.

23. Y. Kuk and P. J. Silverman, Appl. Phys. Lett. **48**, 1597 (1986).

24. B. N. J. Persson and J. E. Demuth, Solid State Comm. **57**, 769 (1986).

25. H. W. Fink, IBM J. Res. Develop. **30**, 460 (1986).

26. T. Hashizume, I. Kamiya, Y. Hasegawa, N. Sano, T. Sakurai, and H. W. Pickering, J. Microscopy **152**, 347 (1988).

27. V. T. Binh, J. Microscopy **152**, 355 (1988).

28. McAllister Technical Services, Berkeley, CA.

29. Industrial Tectonics, Dexter, MI. Part 1451001.

30. Ch. Renner, Ph. Niedermann, A. D. Kent, Ø. Fisher, J. Vac. Sci. Tech. A **8**, 330 (1990).

31. Pfeiffer Balzers, Hudson, NH. Model TPU050. 50 l/s.

32. Parker Seal Group, Salt Lake City, UT. Part 8504-0050 4180.

33. Burr-Brown OPA128LM.

34. Scan tube: Apex PA83, ±130 V. Approach/offset tube: Apex PA88, ±220 V.

35. Data Translation, Marlboro, MA. Model DT2821-F.

36. Orchid Technology, Fremont, CA. Prodesigner Plus VGA for AT bus.

37. Software is written and supported by D. Frank Ogletree. This package, and the electronics are available commercially through RHK Technology, Rochester Hills, MI.

38. D. G. Kelly, A. J. Gellman, M. Salmeron, G. A. Somorjai, V. Maurice, M. Huber, and J. Oudar, Surf. Sci. **204**, 1 (1988).

39. B. Marchon, D. F. Ogletree, M. Salmeron, and W. Siekhaus, J. Vac. Sci. Technol. A **6**, 531 (1988).

40. D. F. Ogletree, C. Ocal, B. Marchon, G. A. Somorjai, and M. Salmeron; T. Beebe and W. Siekhaus, J. Vac. Sci. Technol. A **8**, 297 (1990).

41. D. M. Zeglinski, R. Q. Hwang, A. L. Vasquez-de-Parga, P. Chen, D. F. Ogletree, G. A. Somorjai, M. B. Salmeron, to be published.

Figure Captions

1. Cross-section of the STM head. Tips can be exchanged by inserting a "wobble-stick" (see Fig. 3) into the inner piezo from the left side. A sample holder (see Fig. 5) rests in the quartz tube, and is provided bias voltage by contact with a hanging gold foil strip.

2. Detailed view of the tip holder, tip-retaining Cu-Be spring, and Pt/Rh tip held in an aluminum collar.

3. (a) Schematic of the STM head and its support structure mounted to an eight inch conflat flange. Two vibration isolation stages are shown consisting of Cu-Be springs and a stack of stainless steel plates separated by silicone cord. The wobble-stick transfers tips from the carousel opposite the microscope head. Electrical contact is provided by two ten-pin feedthroughs, and a linear motion feedthrough is used to clamp the microscope baseplate for tip and sample transfers. (b) Photograph of the STM.

4. Equatorial cross-section of the UHV chamber indicating instrument positions. Sample transfer from air to UHV is accomplished through a $2\frac{3}{4}$ inch flange between the STM and viewport.

5. (a) Sectional view of the sample holder. The sapphire balls are mechanically fastened to the holder. The balls are secured by two stainless steel retaining plates. (b) Perspective view of the sample holder.

6. The approach/retract voltage waveform is digitally generated, and is basically a sawtooth. The ramp contracts (for sample approach) or expands (for sample retract) the outer piezo tube.

7. A photograph of the manipulator arm through the viewport. Visible are the electron bombardment heater filament, and sample clamping lever. The copper V-block used for sample holder cooling is visible on the right.

8. Assembly drawing of the sample transfer system. The right flange of the gate valve is mounted to the UHV chamber. The sample holder rests in the basket shown at the end of the transfer rod.

9. (a) Sulfur ("$3\sqrt{3}\times\sqrt{3}$")R30° overlayer on the Re(0001) surface. (b) Image obtained from a S/Re(0001) surface that produced a sharp p(2×2) LEED pattern.

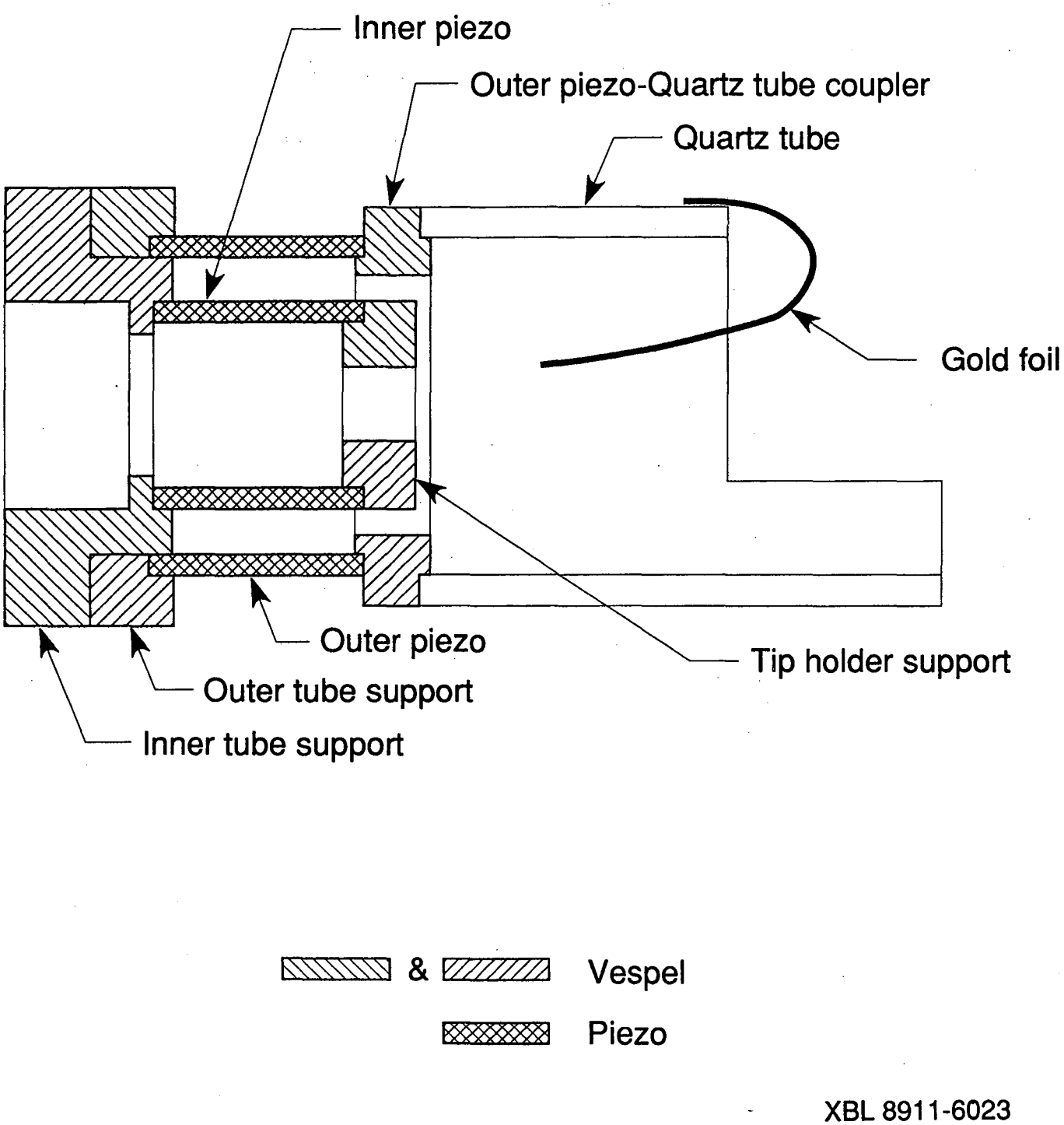
Inner piezo
Outer piezo-Quartz tube coupler
Quartz tube
Gold foil
Outer piezo
Tip holder support
Outer tube support
Inner tube support
& Vespel
Piezo
XBL 8911-6023

Fig. 1

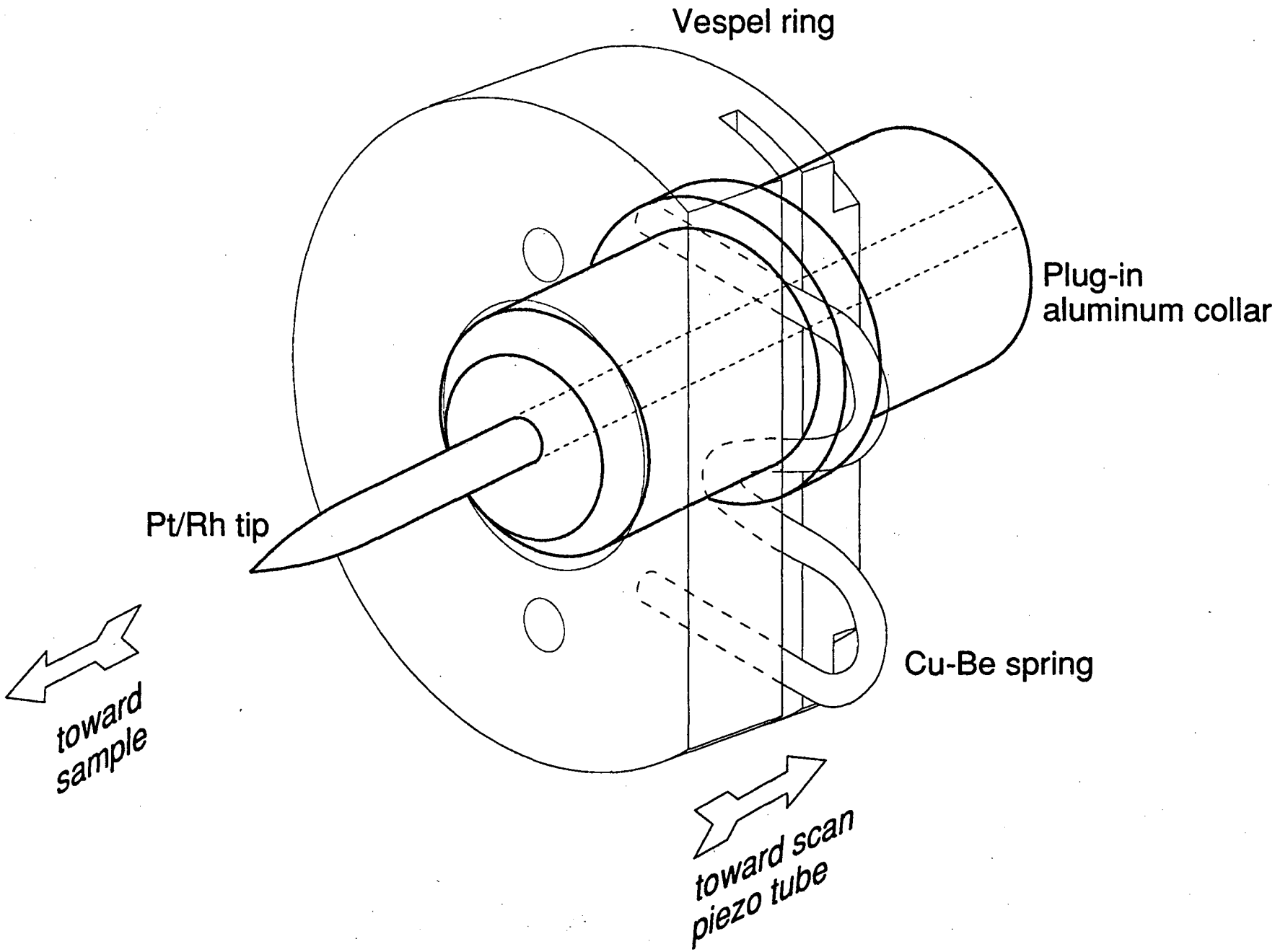

XBL 8911-6026

Fig. 2

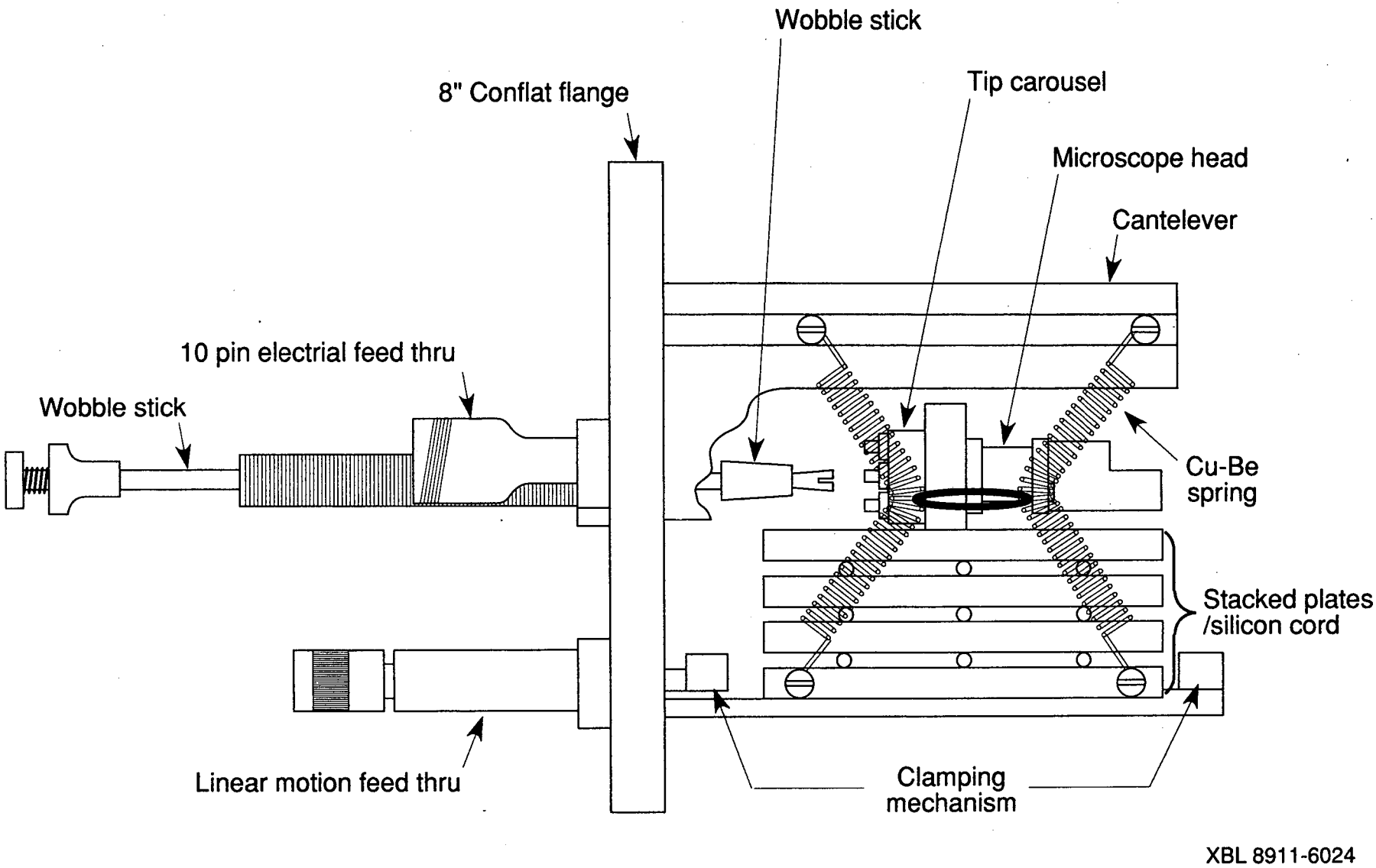
Wobble stick
8" Conflat flange
Tip carousel
Microscope head
Cantelever
10 pin electrial feed thru
Wobble stick
Cu-Be
spring
Stacked plates
/silicon cord
Linear motion feed thru
Clamping
mechanism
XBL 8911-6024

Fig. 3a

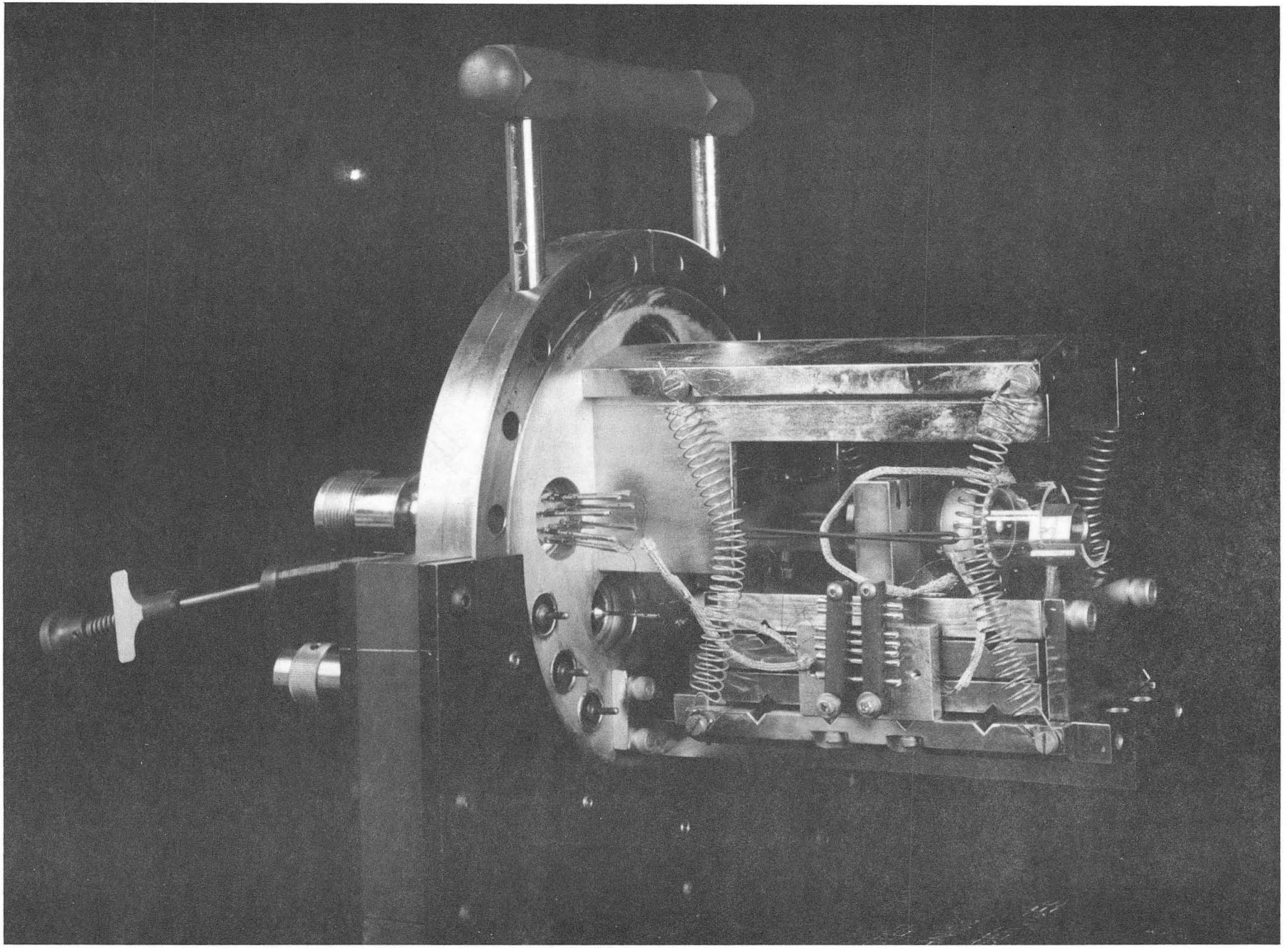

BBC890-10842

Fig. 3b

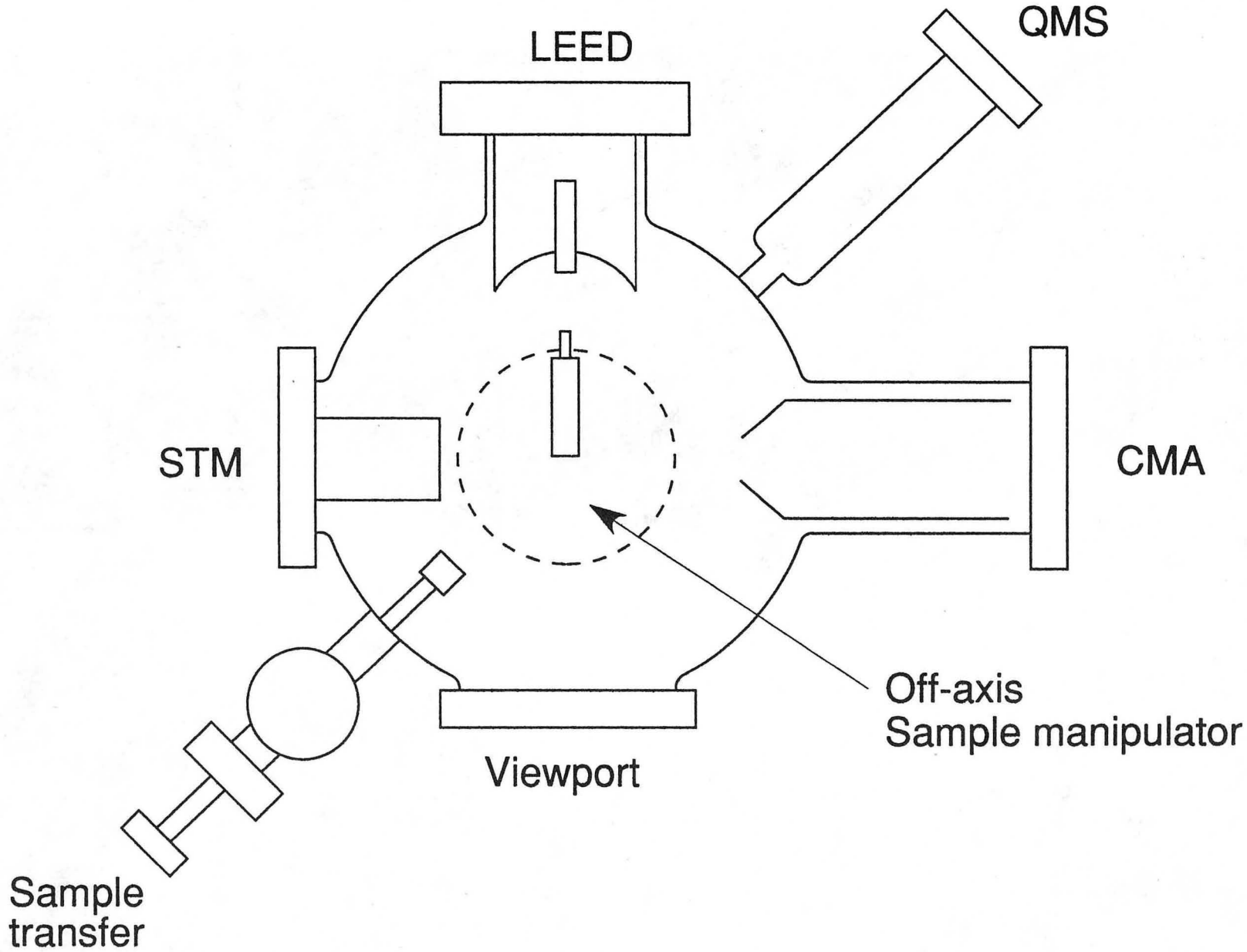

XBL 8911-6025

Fig. 4

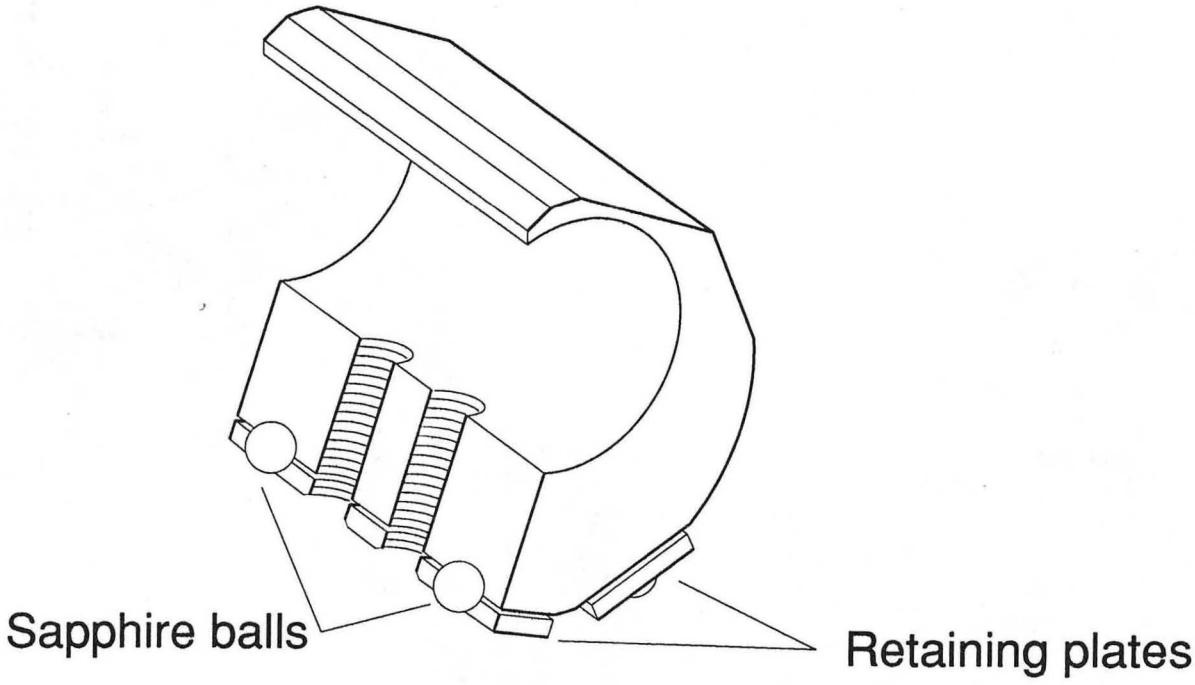

(a)

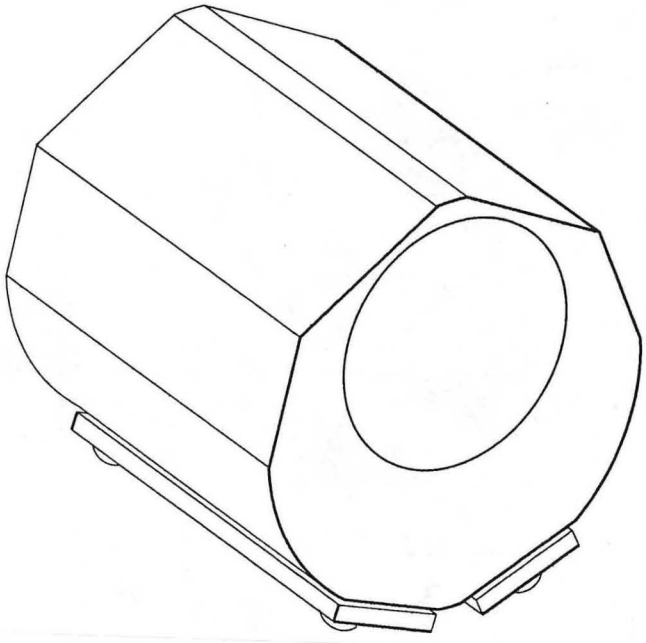

(b)

Fig. 5a,b

XBL 8911-6027

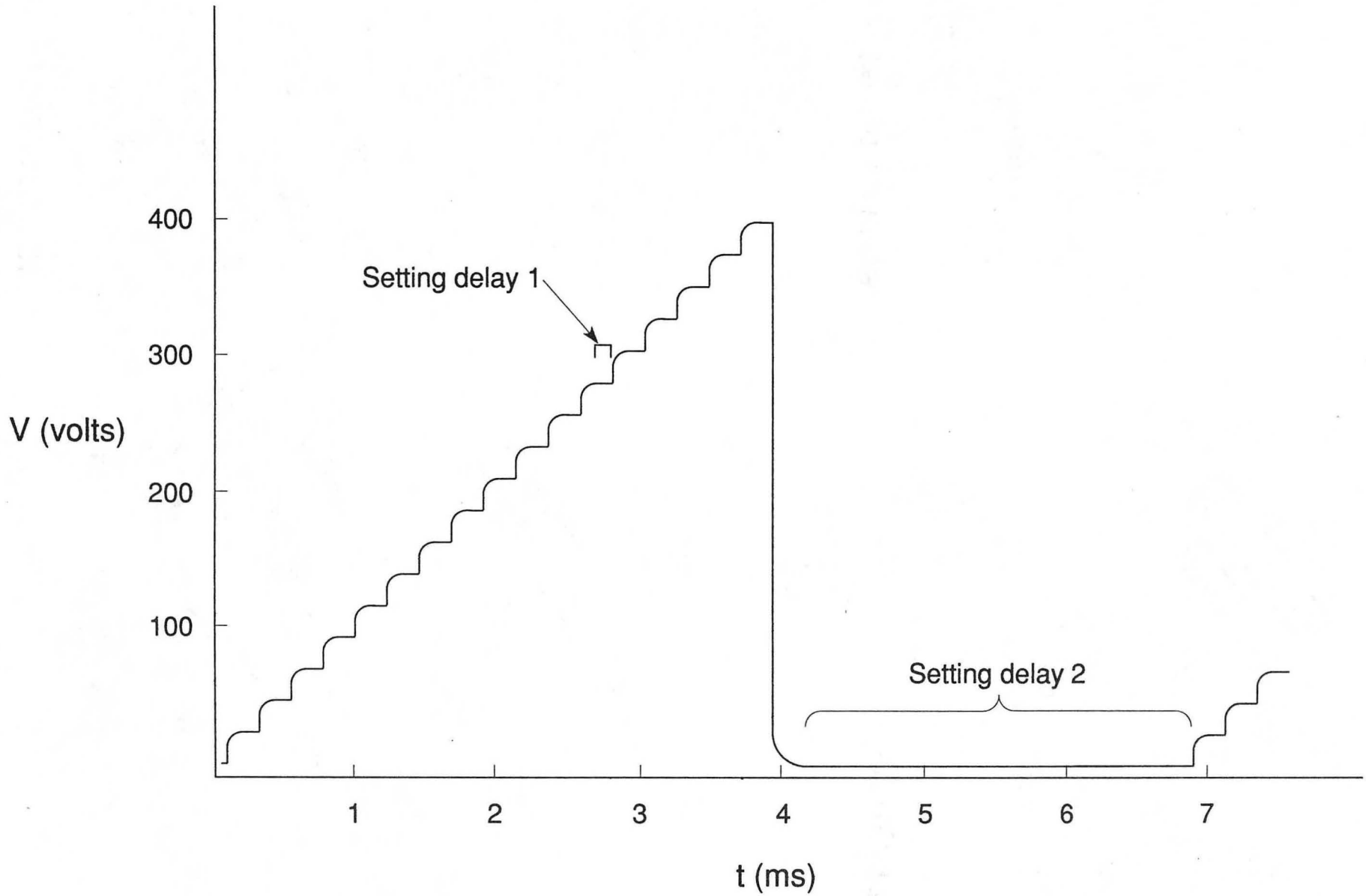

XBL 903-1020

Fig. 6

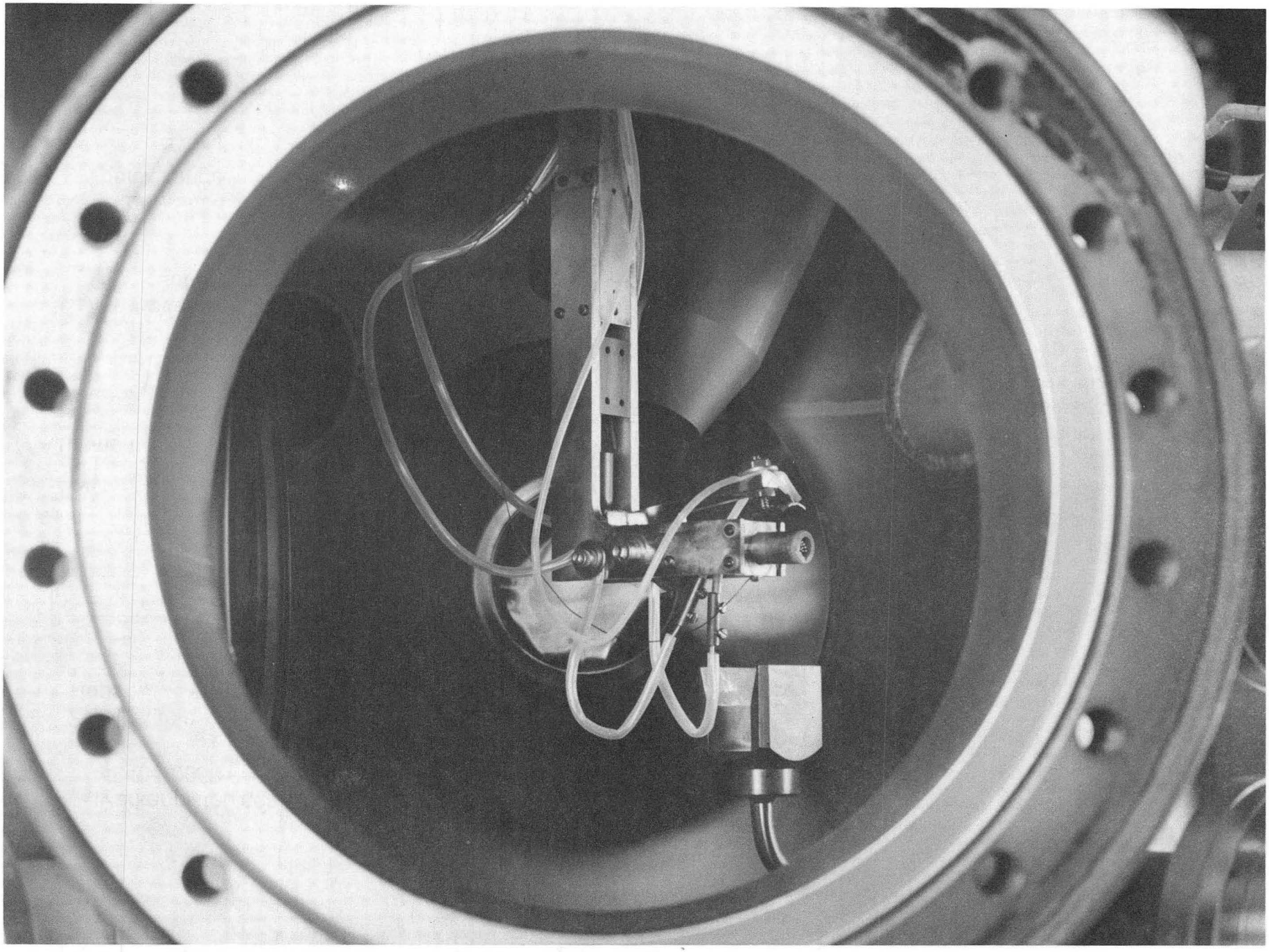

Fig. 7

BBC890-9296

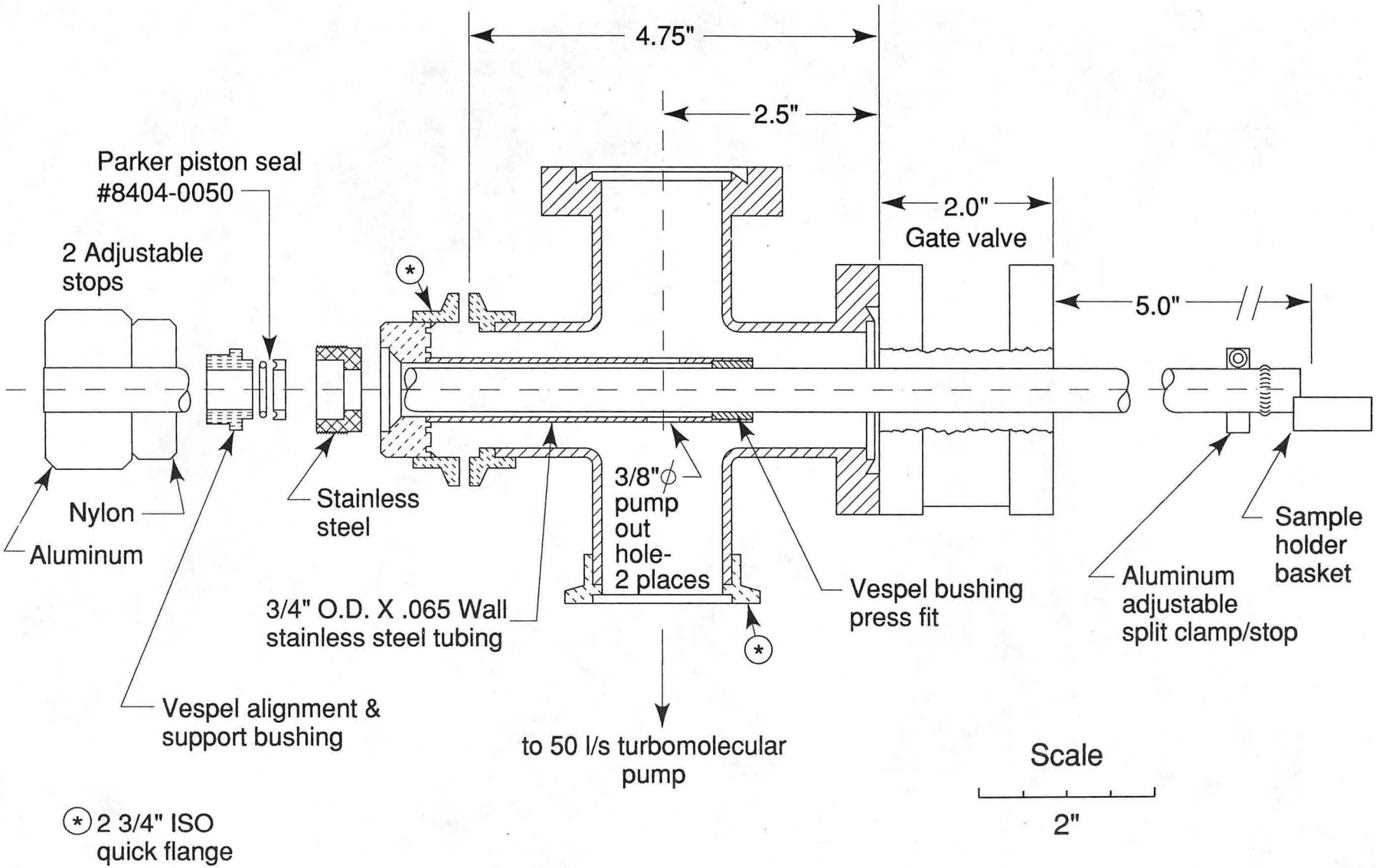
4.75"
2.5"
2.0"
Gate valve
5.0"
Parker piston seal
#8404-0050
2 Adjustable
stops
Nylon
Aluminum
Stainless
steel
3/8"ϕ
pump
out
hole-
2 places
3/4" O.D. X .065 Wall
stainless steel tubing
Vespel bushing
press fit
Aluminum
adjustable
split clamp/stop
Sample
holder
basket
Vespel alignment &
support bushing
to 50 l/s turbomolecular
pump
Scale
2"
(*) 2 3/4" ISO
quick flange
XBL 903-1021

Fig. 8

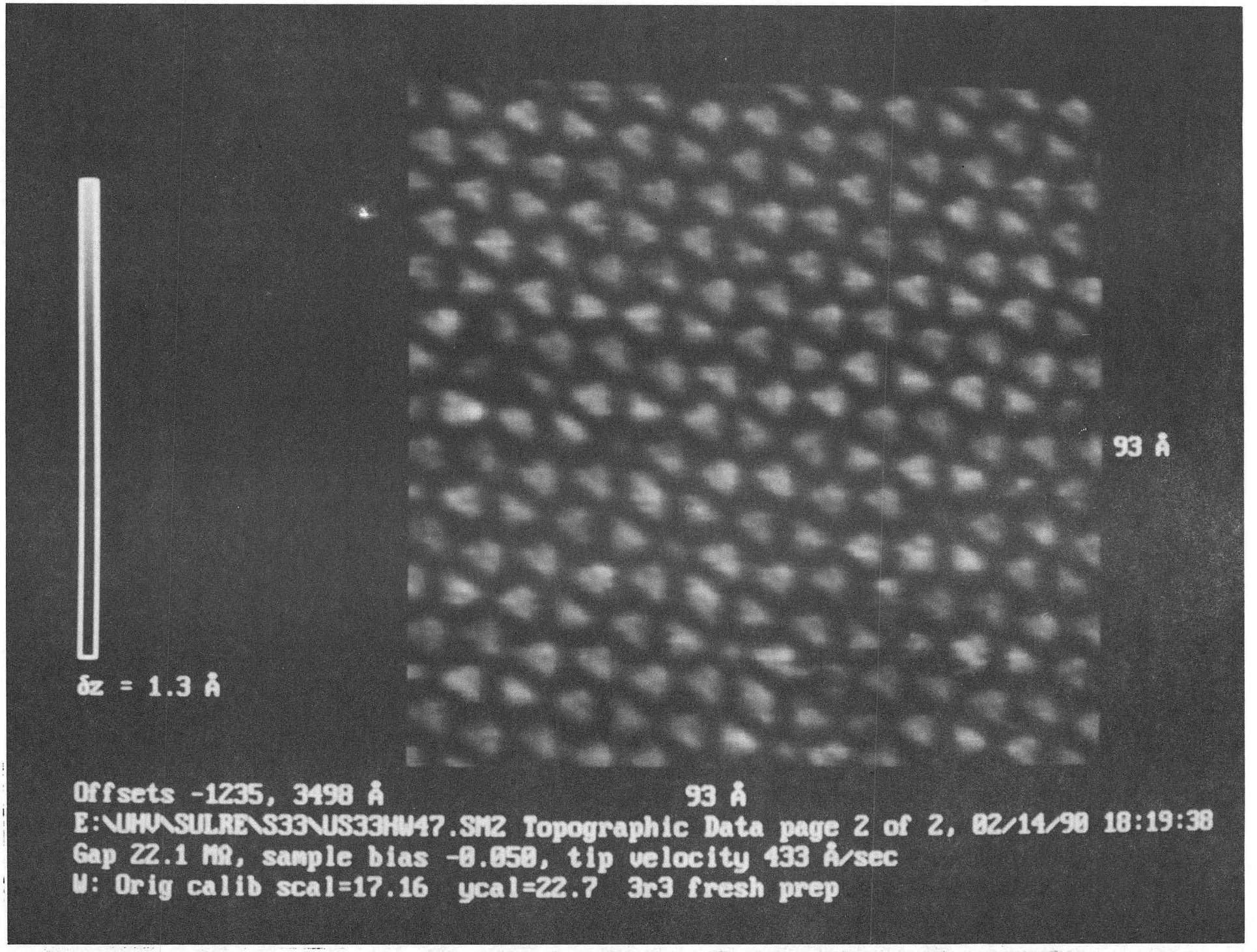

Fig. 9a

BBC903-2233

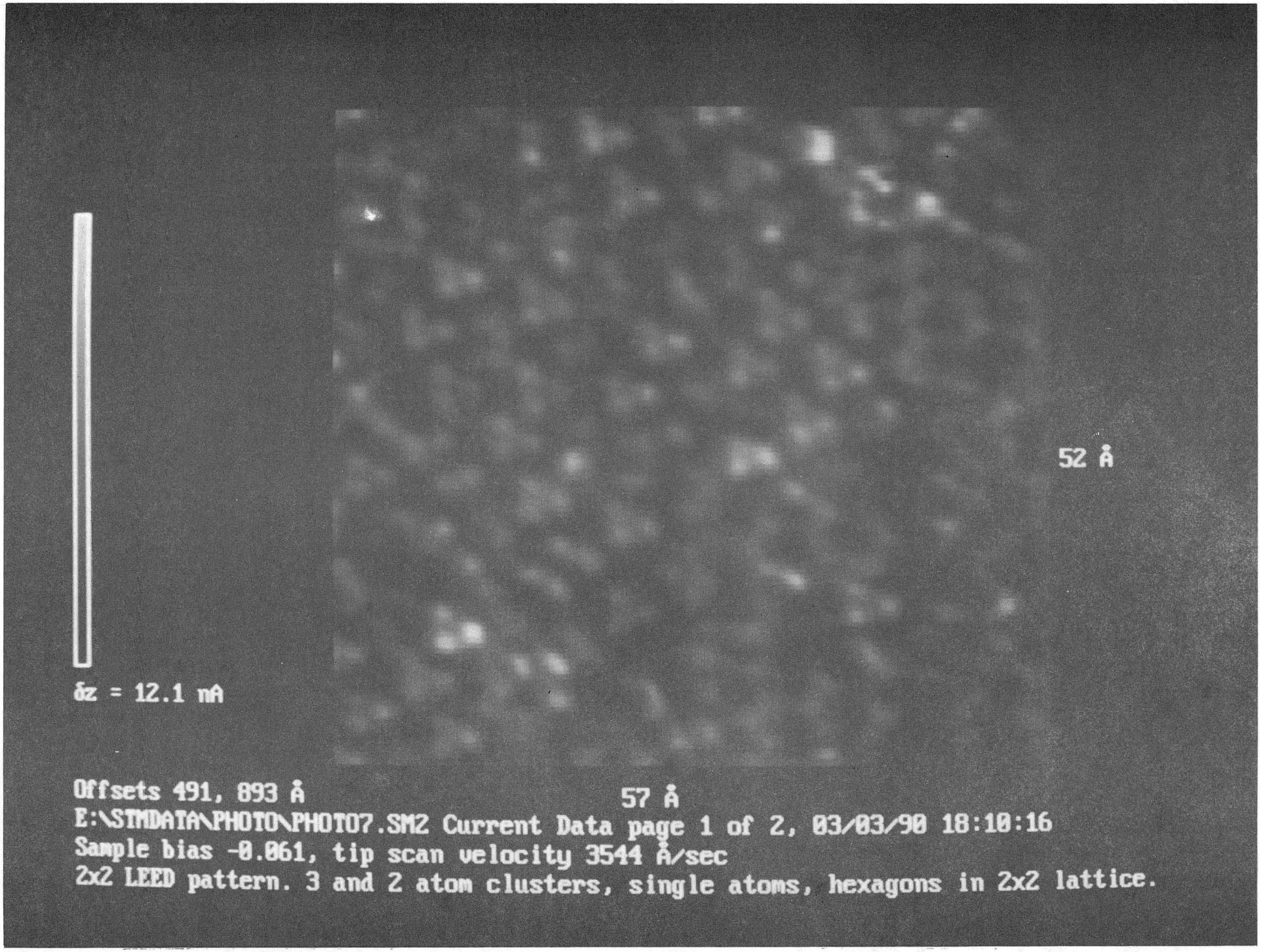

Fig. 9b

BBC903-1901

LAWRENCE BERKELEY LABORATORY
CENTER FOR ADVANCED MATERIALS
1 CYCLOTRON ROAD
BERKELEY, CALIFORNIA 94720