LBL-2896 c.2
UC-48
TID-4500-R64

KIDNEY COMPARTMENT MODEL

Grant T. Gullberg

DONNER LABORATORY

September 1976

Prepared for the U. S. Energy Research and
Development Administration under Contract W-7405-ENG-48

TWO-WEEK LOAN COPY

This is a Library Circulating Copy which may be borrowed for two weeks. For a personal retention copy, call Tech. Info. Division, Ext. 5545

LAWRENCE BERKELEY LABORATORY
UNIVERSITY OF CALIFORNIA
BERKELEY

LBL-2896 c.2

DISCLAIMER

This document was prepared as an account of work sponsored by the United States Government. While this document is believed to contain correct information, neither the United States Government nor any agency thereof, nor the Regents of the University of California, nor any of their employees, makes any warranty, express or implied, or assumes any legal responsibility for the accuracy, completeness, or usefulness of any information, apparatus, product, or process disclosed, or represents that its use would not infringe privately owned rights. Reference herein to any specific commercial product, process, or service by its trade name, trademark, manufacturer, or otherwise, does not necessarily constitute or imply its endorsement, recommendation, or favoring by the United States Government or any agency thereof, or the Regents of the University of California. The views and opinions of authors expressed herein do not necessarily state or reflect those of the United States Government or any agency thereof or the Regents of the University of California.

KIDNEY COMPARTMENT MODEL

Grant T. Gullberg

1976

LBL No. 2896

Lawrence Berkeley Laboratory
University of California
Berkeley, California

KIDNEY COMPARTMENT MODEL

Grant T. Gullberg

Donner Laboratory and Lawrence Berkeley Laboratory
University of California
Berkeley, California 94720

August 1976

Abstract

A multiparameter kidney compartment model which quantitates the amount of iodohippurate concentration as a function of time in the blood, tissue, kidneys and bladder is developed from a system of differential equations which represent first order kinetics. The kinetic data are obtained using a gamma camera and an HP5407 computer system which allows one to delineate areas of interest for the blood and tissue, kidneys, and bladder thus separating the data into four data sets. The estimated tubular transit times have a high ratio of the signal to the variance whereas the estimates of the amount of iodohippurate in the blood, tissue and kidneys have a low ratio of the signal to the variance. Application of this model to patient data requires better statistics than available with conventional ^{131}I-hippurate doses; thus a true test of the efficacy awaits availability of ^{123}I-hippurate.

Table of Contents

		Page
1.0	Introduction	1
2.0	System of Differential Equations for the Kidney Compartment Model	5
3.0	Solution to the System of Differential Equations	11
4.0	The Sampled Data	19
5.0	Algorithm for Nonlinear Estimates	27
	5.1 The optimum least-squares solution	27
	5.2 Taylor series correction vector δ_t	28
	5.3 The gradient vector δ_g	32
	5.4 The Marquardt algorithm	32
6.0	The Partial Derivatives	37
7.0	Covariance Matrix for the Parameters	57
8.0	Results	69
9.0	Conclusion	84
Appendix A	Kidney Computer Program	89
	Index for Subroutines	91
	Program Listings	93
Appendix B	Output for the Kidney Computer Program	205
Bibliography		230

1.0 INTRODUCTION

The kidney compartment model is a multiparameter model which quantitates the amount of ^{131}I-hippurate or ^{123}I-hippurate concentration as a function of time in the blood,tissue, kidneys and bladder. The kidney compartment model described in this report is similar to the model of DeGrazia and co-workers [1] which we have adapted for evaluation of data collected from patients, dogs, mice, and rats using the scintillation camera.

The mathematical model for the kidney assumes that the amount of iodohippurate q(t), in a compartment satisfies first order kinetics,

$$\frac{dq(t)}{dt} = \alpha\, q(t),$$

where the rate of flow from a compartment at any time t is proportional to the amount of tracer in that compartment. This equation can be represented by the following flow diagram

where α is a constant rate coefficient with the unit of $(\text{time})^{-1}$. The flow diagram for the complete kidney model contains seven compartments and eight rate coefficients. The computer evaluation of the constant rate coefficients for the kidney model gives the rate of exchange of isotope in the blood, tissue, and tubular cells of each kidney. The kidney computer program not only evaluates rate coefficients but also determines the transport time down the tubules and collecting ducts to the bladder, plus the initial quantity of iodohippurate in blood, tissue and tubular cells of each kidney.

Data are collected from subjects who have been injected with either ^{131}I-hippurate or ^{123}I-hippurate and positioned under an Anger camera. These data are recorded for 15 second intervals on the HP 5407 computer system [2] in a 64 x 64 digital arrays. Areas of interest are outlined and labeled for each kidney, for the bladder and for the extravascular and blood pools. Curves (data sets) representing the detected activity as a function of time (time function) are generated for each of these four regions-of-interest by integrating the activity from the flagged raster elements for each 15 second frame. Thus for a 25 minute study each time function has 100 data points. These four data sets are then transferred to a CDC-7600 computer where the kidney computer program evaluates the constant rate coefficients.

The evaluation of the rate coefficients is a nonlinear estimation problem. The coefficients are determined using a computer algorithm developed by Marquardt [3] which minimizes a least-squares function. The algorithm requires the evaluation of the partial derivatives

$$\frac{\partial q_j(t)}{\partial \beta_i}, \quad j = 1,7, \quad i = 1,n \qquad (1)$$

where $q_j(t)$ is the activity vs. time for the jth compartment, β_i is the ith parameter, and n is the total number of model parameters. The number of parameters n will vary according to how the areas of interest are chosen as will be illustrated in the text. This report gives an explicit expression for each partial derivative.

The text is divided into a description of the system of differential equations for the kidney compartment model, the solution to

the system of differential equations, the relationship between the measured time functions and compartment time functions, a description of the Marquardt algorithm, an explicit expression for each partial derivative, equation (1), an analysis of the covariance matrix for the estimated parameters and the results obtained from data taken from dogs, rats, and mice. Appendix A gives a listing of the computer program and Appendix B gives an example of the computer output. This report is a working document; therefore, many of the equations are developed in detail and equations are written out explicitly showing the relationships of all the parameters so that future modification in animal and patient trials can be easily implemented.

2.0 SYSTEM OF DIFFERENTIAL EQUATIONS FOR THE KIDNEY COMPARTMENT MODEL

The theoretical model which represents the kinetics of the renal plasma system is given in Figure 1. Once ^{131}I-hippurate or ^{123}I-hippurate is injected into the blood, the orthoiodohippurate (Figure 2) is distributed among the red blood cells, free iodohippurate in plasma, plasma proteins, and interstitial and extracellular spaces [1]. The rate coefficients α_1 and α_2 describe the rate of exchange between the free state in blood and the extravascular spaces which include red cells and iodohippurate bound to plasma proteins. A small portion of the iodohippurate is removed from the blood pool by glomerular filtration indicated by the rate coefficients α_4 and α_7 for the right and left kidney respectively. The major portion of iodohippurate diffuses into the proximal tubular cells with rate coefficients α_3 and α_6 and then into the kidney estuary composed of distal tubules and collecting ducts with rate coefficients α_5 and α_8. Once in the kidney estuary the iodohippurate is not reabsorbed as is water but passes down the collecting system to the bladder requiring an average flow time τ_1 for the right kidney and τ_2 for the left kidney, which is a function of the reabsorption of water and urine flow rate.

The mathematical model which describes the kinetics of the kidney model in Figure 1 is a system of linear differential equations. If we assume that all chemical reactions exhibit first order kinetics, and the amount of iodohippurate in the blood pool, extravascular pool, right kidney tubular cells, and left kidney tubular cells equal u_1, u_2, u_3, and u_4 respectively, then the functions $q_i(t)$ can be expressed explicitly in terms of the variables α_i, u_i, τ_i by solving the following system of differential equations.

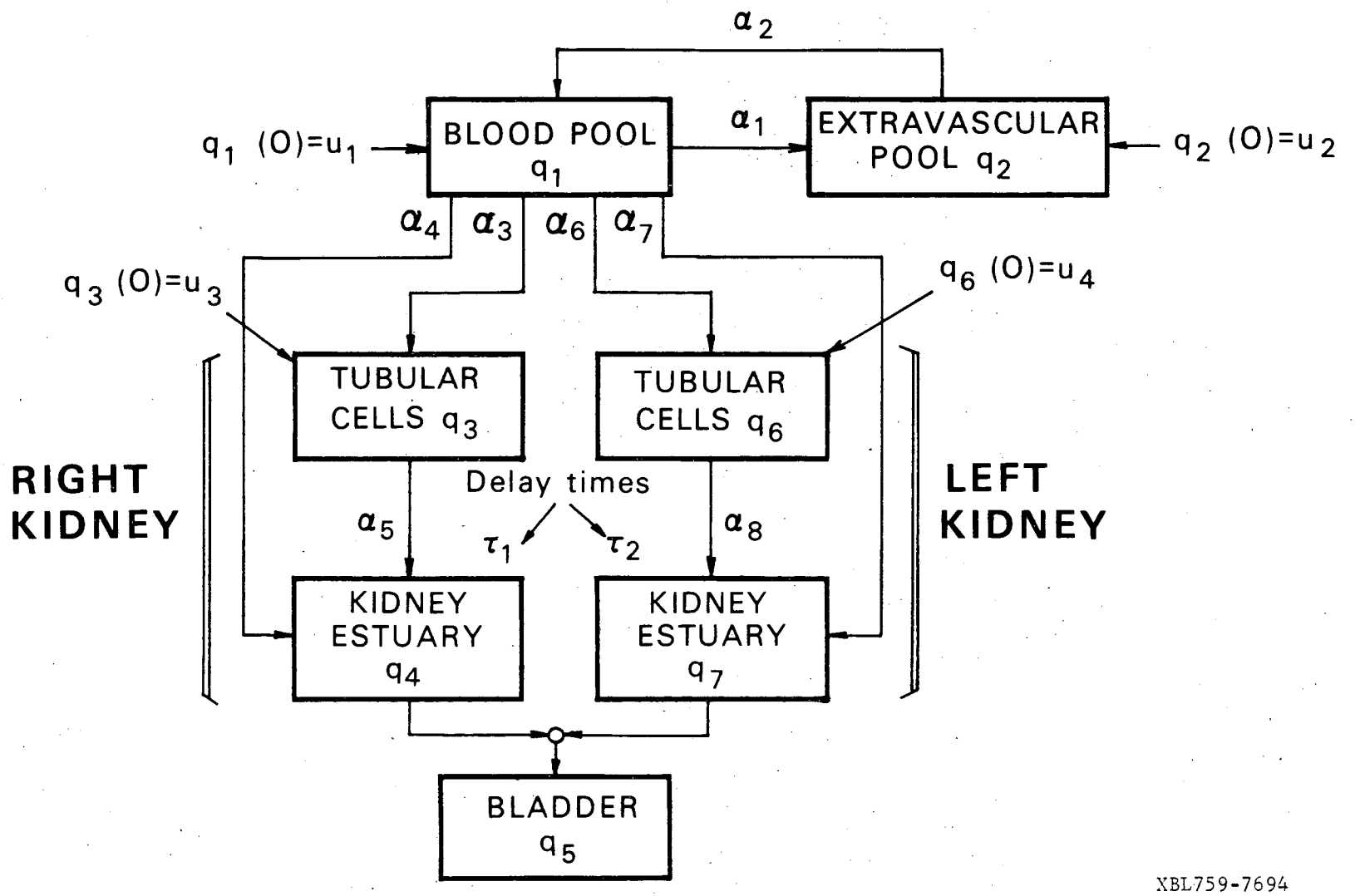

Figure 1. The Kidney Compartment Model

$$\frac{dq_1(t)}{dt} = -(\alpha_1 + \alpha_3 + \alpha_4 + \alpha_6 + \alpha_7)q_1(t) + \alpha_2 q_2(t)$$

$$\frac{dq_2(t)}{dt} = -\alpha_2 q_2(t) + \alpha_1 q_1(t)$$

$$\frac{dq_3(t)}{dt} = -\alpha_5 q_3(t) + \alpha_3 q_1(t)$$

$$\frac{dq_4(t)}{dt} = \begin{cases} \alpha_5 q_3(t) + \alpha_4 q_1(t) & \text{if } 0 \le t \le \tau_1 \\ \alpha_5\left[q_3(t) - q_3(t-\tau_1)\right] + \alpha_4\left[q_1(t) - q_1(t-\tau_1)\right] & \text{if } t > \tau_1 \end{cases}$$

$$\frac{dq_5(t)}{dt} = \begin{cases} 0 & \text{if } 0 \le t < m \\ \alpha_5 q_3(t-\tau_1) + \alpha_4 q_1(t-\tau_1) & \text{if } m < t \le M \text{ and } m = \tau_1 \\ \alpha_8 q_6(t-\tau_2) + \alpha_7 q_1(t-\tau_2) & \text{if } m < t \le M \text{ and } m = \tau_2 \\ \alpha_5 q_3(t-\tau_1) + \alpha_4 q_1(t-\tau_1) + \alpha_8 q_6(t-\tau_2) + \alpha_7 q_1(t-\tau_2) & \text{if } t > M \end{cases}$$

where $m = \min(\tau_1, \tau_2)$ and $M = \max(\tau_1, \tau_2)$;

$$\frac{dq_6(t)}{dt} = -\alpha_8 q_6(t) + \alpha_6 q_1(t)$$

$$\frac{dq_7(t)}{dt} = \begin{cases} \alpha_8 q_6(t) + \alpha_7 q_1(t) & \text{if } 0 \le t \le \tau_2 \\ \alpha_8\left[q_6(t) - q_6(t-\tau_2)\right] + \alpha_7\left[q_1(t) - q_1(t-\tau_2)\right] & \text{if } t > \tau_2 \end{cases}$$

where $q_1(0) = u_1$, $q_2(0) = u_2$, $q_3(0) = u_3$, and $q_6(0) = u_4$.

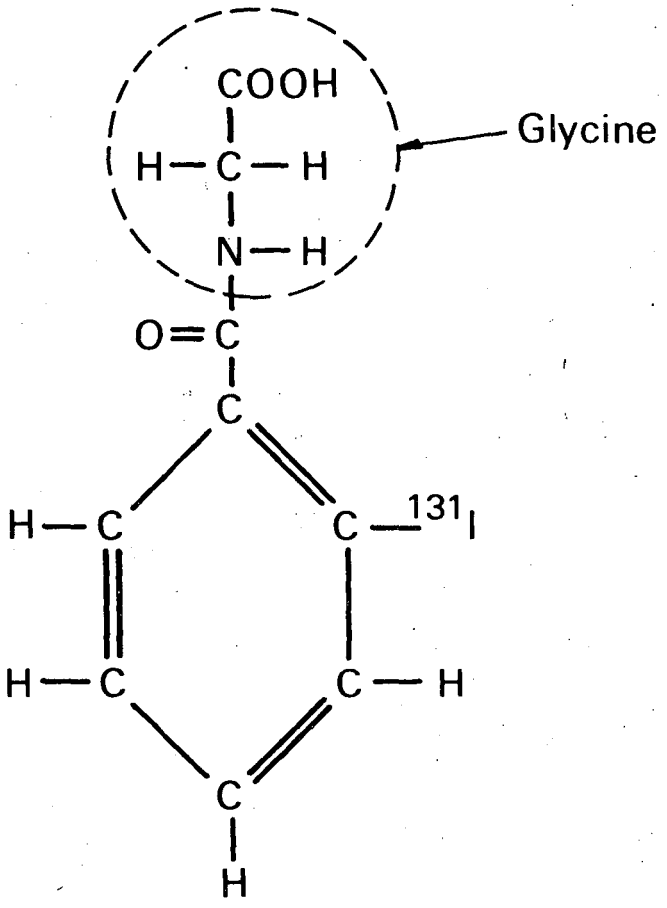

Figure 2. Orthoiodohippurate (N-benzoylglycine)

XBL759-4593

This system of differential equations has a solution which is unique [Theorem 1; 4]. The kidney estuary, composed of renal tubules, collecting ducts, renal pelvis, and ureters, represents a transitory state where the time lags τ_1 and τ_2 are experienced before the iodohippurate reaches the bladder. Atkins [5] points out that a time lag can be thought of as either transport through a large number of small compartments or transport through some inert path where no membrane or chemical kinetics is being performed.

Other kidney models can be derived by simple variations of the general model in Figure 1. For example, we can eliminate the pathways representing the glomerular filtration, or can investigate a model in which one of the kidneys has been removed. These models will be discussed in the section under Results.

3.0 SOLUTION TO THE SYSTEM OF DIFFERENTIAL EQUATIONS

We will use the method of Laplace transforms for determining the solution to the system of differential equations [6]. First we will solve the system of the first two differential equations,

$$\frac{dq_1(t)}{dt} = -(\alpha_1 + \alpha_3 + \alpha_4 + \alpha_6 + \alpha_7)q_1(t) + \alpha_2 q_2(t) \tag{2}$$

$$\frac{dq_2(t)}{dt} = -\alpha_2 q_2(t) + \alpha_1 q_1(t) \ . \tag{3}$$

Taking the Laplace transform of equations (2) and (3), we have

$$SQ_1(S) - q_1(0) = -(\alpha_1 + \alpha_3 + \alpha_4 + \alpha_6 + \alpha_7)Q_1(S) + \alpha_2 Q_2(S)$$

$$SQ_2(S) - q_2(0) = -\alpha_2 Q_2(S) + \alpha_1 Q_1(S),$$

where $Q_i(S) = \int_0^\infty q_i(t)\, e^{-St} dt$ is the Laplace transform of $q_i(t)$.

Simplifying by substituting the initial conditions at $t = 0$, $q_1(0) = u_1$ and $q_2(0) = u_2$, gives

$$(S + P)\, Q_1(S) - \alpha_2 Q_2(S) = u_1$$

$$-\alpha_1\, Q_1(S) + (S + \alpha_2) Q_2(S) = u_2,$$

where $P = \alpha_1 + \alpha_3 + \alpha_4 + \alpha_6 + \alpha_7$. The solution to this system of equations is

$$Q_1(S) = \frac{\begin{vmatrix} u_1 & -\alpha_2 \\ u_2 & S+\alpha_2 \end{vmatrix}}{\begin{vmatrix} S+P & -\alpha_2 \\ -\alpha_1 & S+\alpha_2 \end{vmatrix}} = \frac{u_1(S+\alpha_2) + \alpha_2 u_2}{(S+P)(S+\alpha_2) - \alpha_1\alpha_2} \tag{4}$$

$$Q_2(S) = \frac{\begin{vmatrix} S+P & u_1 \\ -\alpha_1 & u_2 \end{vmatrix}}{(S+P)(S+\alpha_2) - \alpha_1\alpha_2} = \frac{u_2(S+P) + \alpha_1 u_1}{(S+P)(S+\alpha_2) - \alpha_1\alpha_2} \tag{5}$$

Now the roots of the quadratic equation

$$(S+P)(S+\alpha_2) - \alpha_1\alpha_2 = S^2 + (P+\alpha_2)S + P\alpha_2 - \alpha_1\alpha_2$$

are

$$P_1 = \frac{-(P+\alpha_2)+[(P+\alpha_2)^2 - 4\alpha_2(P-\alpha_1)]^{\frac{1}{2}}}{2} \tag{6}$$

and

$$P_2 = \frac{-(P+\alpha_2)-[(P+\alpha_2)^2 - 4\alpha_2(P-\alpha_1)]^{\frac{1}{2}}}{2} \tag{7}$$

Substituting the roots P_1 and P_2 into equations (4) and (5), we have

$$Q_1(S) = \frac{u_1(S+\alpha_2) + \alpha_2 u_2}{(S-P_1)(S-P_2)} \tag{8}$$

$$Q_2(S) = \frac{u_2(S+P) + \alpha_1 u_1}{(S-P_1)(S-P_2)} , \tag{9}$$

which can be written as the sum of two fractions

$$Q_1(S) = \frac{A}{(S-P_1)} + \frac{B}{(S-P_2)} \tag{10}$$

$$Q_2(S) = \frac{A'}{(S-P_1)} + \frac{B'}{(S-P_2)} \tag{11}$$

such that

$$A + B = u_1$$

$$-P_2A - P_1B = u_1\alpha_2 + \alpha_2 u_2$$

and

$$A' + B' = u_2$$

$$-P_2A' - P_1B' = u_2P + \alpha_1 u_1$$

Therefore

$$A = \frac{\begin{vmatrix} u_1 & 1 \\ u_1\alpha_2+\alpha_2u_2 & -P_1 \end{vmatrix}}{\begin{vmatrix} 1 & 1 \\ -P_2 & -P_1 \end{vmatrix}} = \frac{-u_1P_1-u_1\alpha_2-u_2\alpha_2}{P_2-P_1}$$

$$B = \frac{\begin{vmatrix} 1 & u_1 \\ -P_2 & u_1\alpha_2+\alpha_2u_2 \end{vmatrix}}{P_2-P_1} = \frac{u_1\alpha_2+\alpha_2u_2+u_1P_2}{P_2-P_1}$$

$$A' = \frac{\begin{vmatrix} u_2 & 1 \\ u_2P+\alpha_1u_1 & -P_1 \end{vmatrix}}{P_2-P_1} = \frac{-u_2P_1-u_2P-\alpha_1u_1}{P_2-P_1}$$

$$B' = \frac{\begin{vmatrix} 1 & u_2 \\ -P_2 & u_2P+\alpha_1u_1 \end{vmatrix}}{P_2-P_1} = \frac{u_2P+\alpha_1u_1+u_2P_2}{P_2-P_1}$$

Now rewriting equations (10) and (11) as

$$Q_1(S) = A \cdot \frac{1}{(S-P_1)} + B \cdot \frac{1}{(S-P_2)} \tag{12}$$

$$Q_2(S) = A' \cdot \frac{1}{(S-P_1)} + B' \cdot \frac{1}{(S-P_2)} , \tag{13}$$

and taking the inverse Laplace transform we have

$$q_1(t) = A\, e^{P_1t} + B\, e^{P_2t} \tag{14}$$

$$q_2(t) = A'\, e^{P_1t} + B'\, e^{P_2t} . \tag{15}$$

Next we can take the Laplace transform of the differential equations satisfied by the tubular cell time functions $q_3(t)$ and $q_6(t)$, giving

$$Q_3(S) = \frac{\alpha_3}{S+\alpha_5} \cdot Q_1(S) + \frac{u_3}{S+\alpha_5}$$

$$Q_6(S) = \frac{\alpha_6}{S+\alpha_8} \cdot Q_1(S) + \frac{u_4}{S+\alpha_8}$$

where we assume $q_3(0) = u_3$ and $q_6(0) = u_4$. Substituting the expression for the Laplace transform $Q_1(S)$ given by equation (12), we have

$$Q_3(S) = \alpha_3 \left\{ A \cdot \frac{1}{S+\alpha_5} \cdot \frac{1}{S-P_1} + B \cdot \frac{1}{S+\alpha_5} \cdot \frac{1}{S-P_2} \right\} + \frac{u_3}{S+\alpha_5}$$

$$Q_6(S) = \alpha_6 \left\{ A \cdot \frac{1}{S+\alpha_8} \cdot \frac{1}{S-P_1} + B \cdot \frac{1}{S+\alpha_8} \cdot \frac{1}{S-P_2} \right\} + \frac{u_4}{S+\alpha_8} \quad .$$

As we did in equations (8) and (9), we can separate the products of fractions involving the variable S and rewrite $Q_3(S)$ and $Q_6(S)$ as

$$Q_3(S) = \alpha_3 \left\{ A \cdot \frac{1}{\alpha_5+P_1} \left[\frac{1}{S-P_1} - \frac{1}{S+\alpha_5} \right] + B \cdot \frac{1}{\alpha_5+P_2} \left[\frac{1}{S-P_2} - \frac{1}{S+\alpha_5} \right] \right\} + \frac{u_3}{S+\alpha_5} \tag{16}$$

and

$$Q_6(S) = \alpha_6 \left\{ A \cdot \frac{1}{\alpha_8+P_1} \left[\frac{1}{S-P_1} - \frac{1}{S+\alpha_8} \right] + B \cdot \frac{1}{\alpha_8+P_2} \left[\frac{1}{S-P_2} - \frac{1}{S+\alpha_8} \right] \right\} + \frac{u_4}{S+\alpha_8} \quad . \tag{17}$$

Taking the inverse Laplace transform of equation (16) and equation (17) we have

$$q_3(t) = \alpha_3 \left\{ A \cdot \frac{1}{\alpha_5+P_1} \left[e^{P_1 t} - e^{-\alpha_5 t} \right] + B \cdot \frac{1}{\alpha_5+P_2} \left[e^{P_2 t} - e^{-\alpha_5 t} \right] \right\}$$
$$+ u_3 e^{-\alpha_5 t}$$

$$q_6(t) = \alpha_6 \left\{ A \cdot \frac{1}{\alpha_8+P_1} \left[e^{P_1 t} - e^{-\alpha_8 t} \right] + B \cdot \frac{1}{\alpha_8+P_2} \left[e^{P_2 t} - e^{-\alpha_8 t} \right] \right\}$$
$$+ u_4 e^{-\alpha_8 t}$$

The kidney estuaries are transitory compartments with delay times τ_1 and τ_2 for the right kidney and left kidney respectively. Therefore the estuary compartments are each represented by two differential equations; for $t < \tau_1$ or $t < \tau_2$ and $t > \tau_1$ or $t > \tau_2$. First for $t < \tau_1$ we have the Laplace transform of q_4, assuming $q_4(0) = 0$,

$$Q_4(S) = \alpha_5 \cdot \frac{1}{S} \cdot Q_3(S) + \alpha_4 \cdot \frac{1}{S} \cdot Q_1(S)$$
$$= \alpha_3\alpha_5 \left\{ A \cdot \frac{1}{\alpha_5+P_1} \left[\frac{1}{S} \cdot \frac{1}{S-P_1} - \frac{1}{S} \cdot \frac{1}{S+\alpha_5} \right] \right.$$
$$\left. + B \cdot \frac{1}{\alpha_5+P_2} \left[\frac{1}{S} \cdot \frac{1}{S-P_2} - \frac{1}{S} \cdot \frac{1}{S+\alpha_5} \right] \right\}$$
$$+ \alpha_5 u_3 \frac{1}{S} \frac{1}{S+\alpha_5} + \alpha_4 \left\{ A \cdot \frac{1}{S} \cdot \frac{1}{S-P_1} + B \cdot \frac{1}{S} \cdot \frac{1}{S-P_2} \right\}$$
$$= \alpha_3\alpha_5 \left\{ A \cdot \frac{1}{\alpha_5+P_1} \left[\frac{1}{P_1} \cdot \left(\frac{1}{S-P_1} - \frac{1}{S} \right) - \frac{1}{\alpha_5} \left(\frac{1}{S} - \frac{1}{S+\alpha_5} \right) \right] \right.$$
$$\left. + B \cdot \frac{1}{\alpha_5+P_2} \left[\frac{1}{P_2} \cdot \left(\frac{1}{S-P_2} - \frac{1}{S} \right) - \frac{1}{\alpha_5} \left(\frac{1}{S} - \frac{1}{S+\alpha_5} \right) \right] \right\}$$
$$+ u_3 \left(\frac{1}{S} - \frac{1}{S+\alpha_5} \right) + \alpha_4 \left\{ A \cdot \frac{1}{P_1} \left(\frac{1}{S-P_1} - \frac{1}{S} \right) + B \cdot \frac{1}{P_2} \left(\frac{1}{S-P_2} - \frac{1}{S} \right) \right\}$$

Taking the inverse Laplace transform, we have

$$q_4(t) = \alpha_3\alpha_5 \left\{ A \cdot \frac{1}{\alpha_5+P_1} \left[\frac{1}{P_1} \quad (e^{P_1 t} - 1) - \frac{1}{\alpha_5} (1 - e^{-\alpha_5 t}) \right] \right.$$

$$\left. + B \cdot \frac{1}{\alpha_5+P_2} \left[\frac{1}{P_2} \cdot (e^{P_2 t} - 1) - \frac{1}{\alpha_5} (1 - e^{-\alpha_5 t}) \right] \right\} + u_3(1 - e^{-\alpha_5 t})$$

$$+ \alpha_4 \left\{ A \cdot \frac{1}{P_1} (e^{P_1 t} - 1) + B \cdot \frac{1}{P_2} (e^{P_2 t} - 1) \right\}$$

$$= f(t) \qquad \text{for } t < \tau_1$$

For $t > \tau_1$ we then have

$$q_4(t) = f(t) - f(t - \tau_1).$$

As we did above for $q_4(t)$ we can solve for $q_7(t)$ giving the expression

$$q_7(t) = \alpha_6\alpha_8 \left\{ A \cdot \frac{1}{\alpha_8+P_1} \left[\frac{1}{P_1} (e^{P_1 t} - 1) - \frac{1}{\alpha_8} (1 - e^{-\alpha_8 t}) \right] \right.$$

$$\left. + B \cdot \frac{1}{\alpha_8+P_2} \cdot \left[\frac{1}{P_2}(e^{P_2 t}-1) - \frac{1}{\alpha_8} (1 - e^{-\alpha_8 t}) \right] \right\} + u_4(1 - e^{-\alpha_8 t})$$

$$+ \alpha_7 \left\{ A \cdot \frac{1}{P_1}(e^{P_1 t} -1) + B \cdot \frac{1}{P_2} (e^{P_2 t} - 1) \right\}$$

$$= g(t) \qquad \text{for } t < \tau_2$$

For $t > \tau_2$,

$$q_7(t) = g(t) - g(t - \tau_2).$$

The quantity of hippurate in the bladder, $q_5(t)$, can be expressed without solving the differential equations by noting that the estuary

compartments for both kidneys model nothing more than a delay of flow to the bladder. Using the notation $f(t)$ and $g(t)$ to represent $q_4(t)$ for $t < \tau_1$ and $q_7(t)$ for $t < \tau_2$ respectively, we have

$$q_5(t) = 0 \qquad \text{if } t < m$$

$$q_5(t) = g(t - \tau_2) \qquad \text{if } m < t < M$$

$$m = \tau_2$$

$$q_5(t) = f(t - \tau_1) \qquad \text{if } m < t < M$$

$$m = \tau_1$$

$$q_5(t) = g(t - \tau_2) + f(t - \tau_1) \qquad \text{if } t > M$$

where $m = \min(\tau_1, \tau_2)$ and $M = \max(\tau_1, \tau_2)$.

4.0 THE SAMPLED DATA

Using areas of interest outlined for the right kidney, left kidney, bladder, and blood and tissue, as shown in Figure 3, the HP 5407A computer system generates the four time functions W_k^1, W_k^2, W_k^3, W_k^4 for each time point t_k. These time functions are represented by the sample of N vectors $W_k = (W_k^1, W_k^2, W_k^3, W_k^4)$, $k = 1,N$, where

$W_k^1 \sim$ Right Kidney

$W_k^2 \sim$ Left Kidney

$W_k^3 \sim$ Bladder

$W_k^4 \sim$ Blood and Tissue.

The data for these four time functions are plotted for a particular study in Figure 4.

For these data we want to minimize the least-squares function

$$R(\alpha, u, \tau, \gamma) = \sum_{k=1}^{N} \sum_{\ell=1}^{4} \frac{[W_k^\ell - w_k^\ell(\alpha, u, \tau, \gamma)]^2}{\sigma^2(W_k^\ell)} \tag{18}$$

where the sequence of vectors $w_k = (w_k^1, w_k^2, w_k^3, w_k^4)$, $k = 1,N$, are related to the theoretical quantity of iodohippurate for each compartment, $q_i(t_k)$, as follows

$$\begin{pmatrix} w_k^1 \\ w_k^2 \\ w_k^3 \\ w_k^4 \end{pmatrix} = \gamma \begin{pmatrix} q_1(t_k) \\ q_2(t_k) \\ q_3(t_k) \\ q_4(t_k) \\ q_5(t_k) \\ q_6(t_k) \\ q_7(t_k) \end{pmatrix} . \tag{19}$$

The time functions W^ℓ represent the observed data whereas w^ℓ are predicted time functions as generated for various parameters α, u, τ, and γ.

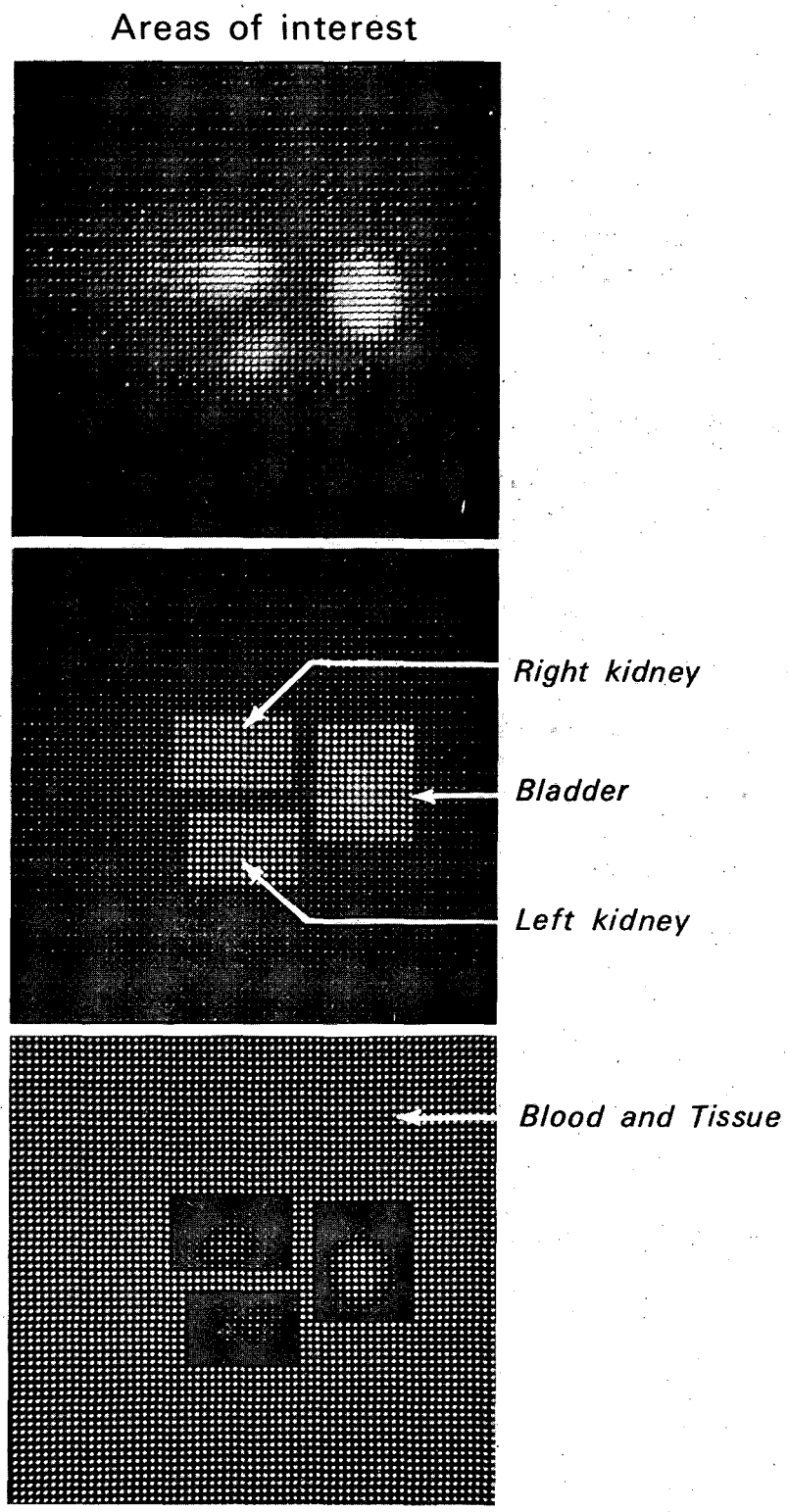

XBB 758 6278

Figure 3. Areas of interest representing the time functions for the right kidney, left kidney, bladder and blood and tissue pools.

From equation (19), we see that the row elements of the matrix γ proportionately relate the time function to the quantity of iodohippurate in each compartment. Depending on how the areas of interest are delineated, the theoretical time functions w^1, w^2, w^3, w^4 may be related to the functions $q_i(t)$ as follows:

Right Kidney: $$w_k^1 = \gamma_1 q_3(t_k) + \gamma_2 q_4(t_k) + \gamma_3 q_1(t_k) + \gamma_4 q_2(t_k) + \gamma_5 q_5(t_k)$$

Left Kidney: $$w_k^2 = \gamma_1 q_6(t_k) + \gamma_2 q_7(t_k) + \gamma_6 q_1(t_k) + \gamma_7 q_2(t_k) + \gamma_8 q_5(t_k)$$

Bladder: $$w_k^3 = \gamma_9 q_5(t_k) + \gamma_{10} q_1(t_k) + \gamma_{11} q_2(t_k)$$

Blood and Tissue: $$w_k^4 = \gamma_{12} q_1(t_k) + \gamma_{13} q_2(t_k) + \gamma_{14} q_5(t_k) + \gamma_{15}(q_3(t_k) + q_4(t_k)) + \gamma_{16}(q_6(t_k) + q_7(t_k)) .$$

Thus the above system of equations can be written as

$$\begin{pmatrix} w_k^1 \\ w_k^2 \\ w_k^3 \\ w_k^4 \end{pmatrix} = \begin{pmatrix} \gamma_3 & \gamma_4 & \gamma_1 & \gamma_2 & \gamma_5 & 0 & 0 \\ \gamma_6 & \gamma_7 & 0 & 0 & \gamma_8 & \gamma_1 & \gamma_2 \\ \gamma_{10} & \gamma_{11} & 0 & 0 & \gamma_9 & 0 & 0 \\ \gamma_{12} & \gamma_{13} & \gamma_{15} & \gamma_{15} & \gamma_{14} & \gamma_{16} & \gamma_{16} \end{pmatrix} \begin{pmatrix} q_1(t_k) \\ q_2(t_k) \\ q_3(t_k) \\ q_4(t_k) \\ q_5(t_k) \\ q_6(t_k) \\ q_7(t_k) \end{pmatrix} .$$

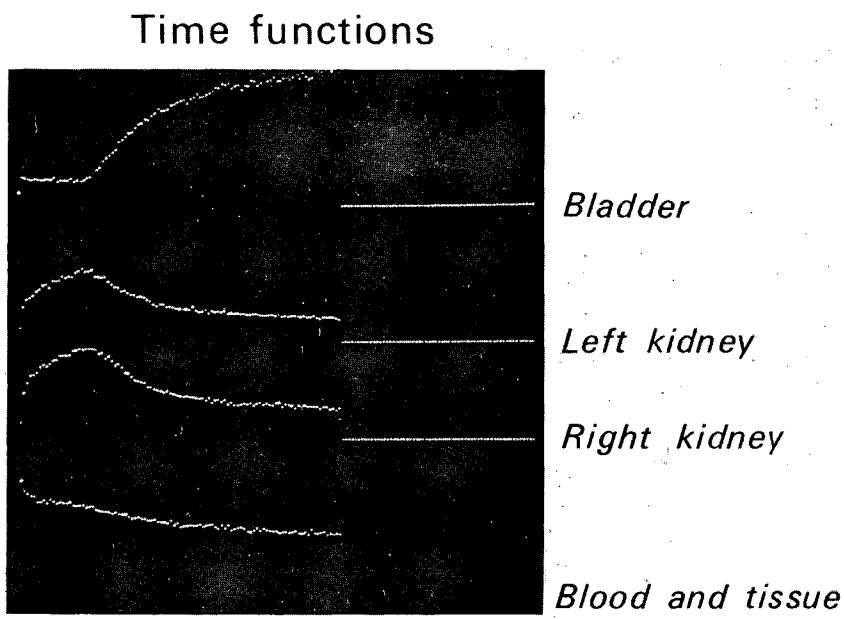

XBB 758 6279

Figure 4. The generated time functions for the areas of interest given in Figure 3.

The expressions for $q_i(t)$ were developed in the previous section and are summarized here as follows

$$q_1(t) = A\, e^{P_1 t} + B\, e^{P_2 t}$$

$$q_2(t) = A'\, e^{P_1 t} + B'\, e^{P_2 t}$$

$$q_3(t) = \alpha_3 \left\{ \frac{A}{\alpha_5+P_1} \left[e^{P_1 t} - e^{P_2 t} \right] + \frac{B}{\alpha_5+P_2} \left[e^{P_2 t} - e^{-\alpha_5 t} \right] \right\} + u_3\, e^{-\alpha_5 t}$$

$$q_4(t) = \begin{cases} f(t) = \alpha_3\alpha_5 \left\{ \frac{A}{\alpha_5+P_1} \left[\frac{1}{P_1} (e^{P_1 t}-1) - \frac{1}{\alpha_5} (1-e^{-\alpha_5 t}) \right] \right. \\ \qquad \left. + \frac{B}{\alpha_5+P_2} \left[\frac{1}{P_2} \cdot (e^{P_2 t}-1) - \frac{1}{\alpha_5} (1-e^{-\alpha_5 t}) \right] \right\} + u_3 (1-e^{-\alpha_5 t}) \\ \qquad + \alpha_4 \left\{ \frac{A}{P_1} (e^{P_1 t}-1) + \frac{B}{P_2} (e^{P_2 t}-1) \right\} \\ \qquad\qquad\qquad\qquad \text{for } t < \tau_1 \\ f(t) - f(t-\tau_1) \qquad \text{for } t > \tau_1 \end{cases}$$

$$q_5(t) = \begin{cases} 0 & \text{if } t < m \\ g(t-\tau_2) & \text{if } m < t < M;\ m = \tau_2 \\ f(t-\tau_1) & \text{if } m < t < M;\ m = \tau_1 \\ g(t-\tau_2) + f(t-\tau_1) & \text{if } t > M \end{cases}$$

where $m = \min(\tau_1, \tau_2)$ and $M = \max(\tau_1, \tau_2)$,

$$q_6(t) = \alpha_6 \left\{ \frac{A}{\alpha_8+P_1} \left[e^{P_1 t} - e^{-\alpha_8 t} \right] + \frac{B}{\alpha_8+P_2} \left[e^{P_2 t} - e^{-\alpha_8 t} \right] \right\}$$

$$+ u_4\, e^{-\alpha_8 t}$$

$$q_7(t) = \begin{cases} g(t) = \alpha_6\alpha_8 \left\{ \frac{A}{\alpha_8+P_1} \left[\frac{1}{P_1} (e^{P_1 t}-1) - \frac{1}{\alpha_8} (1 - e^{-\alpha_8 t}) \right] \right. \\ \qquad \left. + \frac{B}{\alpha_8+P_2} \left[\frac{1}{P_2} (e^{P_2 t} -1) - \frac{1}{\alpha_8} (1 - e^{-\alpha_8 t}) \right] \right\} + u_4(1 - e^{-\alpha_8 t}) \\ \qquad + \alpha_7 \left\{ \frac{A}{P_1} (e^{P_1 t} -1) + \frac{B}{P_2} (e^{P_2 t}-1) \right\} \\ \qquad\qquad \text{for } t < \tau_2 \\ g(t) - g(t - \tau_2) \text{ for } t \geq \tau_2 \end{cases}$$

where

$$A = - \frac{u_1 P_1 + u_1 \alpha_2 + u_2 \alpha_2}{P_2 - P_1}$$

$$B = \frac{u_1 \alpha_2 + \alpha_2 u_2 + u_1 P_2}{P_2 - P_1}$$

$$A' = - \frac{u_2 P_1 + u_2 P + \alpha_1 u_1}{P_2 - P_1}$$

$$B' = \frac{u_2 P + \alpha_1 u_1 + u_2 P_2}{P_2 - P_1}$$

$$P = \alpha_1 + \alpha_3 + \alpha_4 + \alpha_6 + \alpha_7$$

$$P_1 = \frac{-(P+\alpha_2) + (P+\alpha_2)^2 - 4\alpha_2(P-\alpha_1)^{\frac{1}{2}}}{2} \tag{6}$$

$$P_2 = \frac{-(P+\alpha_2) - (P+\alpha_2)^2 - 4\alpha_2(P-\alpha_1)^{\frac{1}{2}}}{2} \tag{7}$$

The sampled data point W_k^ℓ is assumed to be the variance $\sigma^2(W_k^\ell)$ for the measurement. Therefore the minimum of

$$R(\alpha,u,\tau,\gamma) = \sum_{k=1}^{N} \sum_{\ell=1}^{4} \frac{[W_k^\ell - w_k^\ell(\alpha,u,\tau,\gamma)]^2}{W_k^\ell}$$

is a weighted least-square solution for the kidney model.

The time function for each area of interest represents data measured for a particular organ plus data from the projection of overlapping blood and extravascular pools, as well as scatter photons from other compartments. The elements of the matrix γ will vary according to how the areas of interest are outlined. Therefore the example given above is only one possible functional relationship between the time functions w_k^ℓ and the theoretical quantities q_i for each compartment. The parameters of γ which best fit the model are evaluated along with α, u, and τ by the kidney computer program.

5.0 ALGORITHM FOR NONLINEAR ESTIMATES

5.1 The Optimum Least-Squares Solution

If we write equation (18) in matrix notation, then we say that a least-squares solution for the kidney model is the vector $\hat{\beta}$ which minimizes the least-squares function

$$R(\beta) = [W-w(\beta)]^T \Psi^{-1} [W-w(\beta)] \tag{20}$$

where Ψ is the km x km weighting matrix, the observation matrix,

$$W = \begin{pmatrix} W_1^1 \\ \vdots \\ W_1^m \\ W_2^1 \\ \vdots \\ W_2^m \\ \vdots \\ W_k^1 \\ \vdots \\ W_k^m \end{pmatrix}$$

is a km x 1 matrix and the matrix $w(\beta)$ of theoretical values generated for β is a km x 1 matrix. For the kidney model, the vector β in equation (20) has components made of α referred to in equation (18) along with the variables u, τ, γ as indicated by the expression $\beta = (\alpha, \tau, u, \gamma)$. This is a nonlinear estimation problem since the functions $w_j^i(\beta)$ are nonlinear in the vector variable β. Most methods which minimize equation (20) use either a Taylor series expansion where successive approximations are made based on local linearity (Gauss-Newton method), or a gradient search also known as steepest descent method. The Gauss-Newton method tends to diverge frequently and the steepest-descent methods are very slow to converge.

Marquardt [3] found that the angle ϕ between the Taylor series correction vector δ_t and the gradient vector δ_g usually fell in the

range $80^{\circ} < \phi < 90^{\circ}$. In order that any method converge, the correction vector must be within 90° of the gradient of R. Even though the Taylor series correction is within 90° of the gradient, Marquardt found that a more appropriate direction would be one which interpolates between the gradient δ_g and δ_t. In algorithms which use either a Taylor series expansion or a steepest descent approach, both a direction and a stepsize must be determined. However, Marquardt's algorithm determines the direction and step size simultaneously. Before describing the Marquardt algorithm, we will first give expressions for the Taylor series correction vector δ_t and the gradient vector δ_g.

5.2 Taylor Series Correction Vector δ_t

Deutsch [7] outlines the Gauss-Newton algorithm and gives an expression for the Taylor series correction vector δ_t. It is suggested that the reader also study Deutsch [7] for a review of matrix calculus which will be helpful in understanding the development of some of the following equations. The structure of each matrix will be shown explicitly in order to give the reader a better understanding of how the elements are calculated.

In order to minimize equation (20), one wants to solve the following equation for $\hat{\beta}$

$$\nabla_{\beta}(w(\hat{\beta}))^{T}\,\Psi^{-1}\left[W-w(\hat{\beta})\right] = 0 \quad , \tag{21}$$

where

$$T^{T}(\beta) = \nabla_{\beta}(w(\beta))^{T} = \begin{pmatrix} \frac{\partial w_1^1}{\partial \beta_1}, \ldots, \frac{\partial w_1^m}{\partial \beta_1}, \ldots, \frac{\partial w_k^1}{\partial \beta_1}, \ldots, \frac{\partial w_k^m}{\partial \beta_1} \\ \vdots \\ \frac{\partial w_1^1}{\partial \beta_n}, \ldots, \frac{\partial w_1^m}{\partial \beta_n}, \ldots, \frac{\partial w_k^1}{\partial \beta_n}, \ldots, \frac{\partial w_k^m}{\partial \beta_n} \end{pmatrix} . \tag{22}$$

Now if $w(\beta)$ is a nonlinear function in β, we can expand $w(\beta)$ in

a Taylor series and obtain

$$\underset{km \times 1}{w(\beta)} \simeq \underset{km \times 1}{w(\beta_o)} + \underset{km \times n}{T(\beta_o)} \; \underset{n \times 1}{(\beta-\beta_o)} \tag{23}$$

provided β_o is close to β. Therefore substituting (23) into (21) and assuming that

$$\nabla_\beta (w(\hat{\beta}))^T \simeq \nabla_\beta (w(\hat{\beta}_o))^T , \tag{24}$$

we get

$$T^T(\hat{\beta}_o)\, \Psi^{-1} \left[W-w(\hat{\beta}_o)-T(\hat{\beta}_o)\; (\hat{\beta}-\hat{\beta}_o) \right] = 0 . \tag{25}$$

This is solved for $\hat{\beta}$ by first expanding (25), giving

$$T^T(\hat{\beta}_o)\, \Psi^{-1}(W-w(\hat{\beta}_o)) - T^T(\hat{\beta}_o)\, \Psi^{-1}T(\hat{\beta}_o)\; \hat{\beta} + T^T(\hat{\beta}_o)\, \Psi^{-1}T(\hat{\beta}_o)\; \hat{\beta}_o = 0$$

and then simplifying,

$$T^T(\hat{\beta}_o)\, \Psi^{-1}T(\hat{\beta}_o)\; (\hat{\beta}-\hat{\beta}_o) = T^T(\hat{\beta}_o)\, \Psi^{-1}(W-w(\hat{\beta}_o)). \tag{26}$$

If we substitute $B = T^T(\hat{\beta}_o)\, \Psi^{-1}T(\hat{\beta}_o)$ and $E = T^T(\hat{\beta}_o)\, \Psi^{-1}(W-w(\hat{\beta}_o))$ into equation (26), we have

$$B\; (\hat{\beta}-\hat{\beta}_o) = E.$$

We can then express $\hat{\beta}$ as

$$\hat{\beta} = \hat{\beta}_o + \delta_t, \tag{27}$$

where $\delta_t = B^{-1}E$ is the Taylor series correction vector.

If we assume that the observations are independent, i.e.

$$\Psi = \begin{pmatrix} \sigma_1^1 & & & & & & & & & \\ & \sigma_1^2 & & & & & & & 0 & \\ & & \ddots & & & & & & & \\ & & & \sigma_1^m & & & & & & \\ & & & & \ddots & & & & & \\ & & & & & \sigma_k^1 & & & & \\ & 0 & & & & & \sigma_k^2 & & & \\ & & & & & & & \ddots & & \\ & & & & & & & & \sigma_k^m & \end{pmatrix} \; km \times km \tag{28}$$

where σ_i^j is the variance of each observation, then we can evaluate $B = T^T(\hat{\beta}_o)\ \Psi^{-1} T(\hat{\beta}_o)$ as follows

$$B = \underset{n \times km}{\begin{pmatrix} \frac{\partial w_1^1}{\partial \beta_1}, \cdots \frac{\partial w_1^m}{\partial \beta_1}, \cdots\cdots \frac{\partial w_k^1}{\partial \beta_1}, \cdots \frac{\partial w_k^m}{\partial \beta_1} \\ \vdots \\ \frac{\partial w_1^1}{\partial \beta_n}, \cdots \frac{\partial w_1^m}{\partial \beta_n}, \cdots\cdots \end{pmatrix}} \underset{km \times km}{\Psi^{-1}} \underset{km \times n}{\begin{pmatrix} \frac{\partial w_1^1}{\partial \beta_1} \cdots\cdots & \frac{\partial w_1^1}{\partial \beta_n} \\ \vdots & \\ \frac{\partial w_k^m}{\partial \beta_1} \cdots\cdots & \frac{\partial w_k^m}{\partial \beta_n} \end{pmatrix}}$$

$$B = \underset{n \times n}{\begin{pmatrix} \sum_{j=1}^{k} \sum_{i=1}^{m} \frac{\partial w_j^i}{\partial \beta_1} \cdot \frac{1}{\sigma_j^i} \cdot \frac{\partial w_j^i}{\partial \beta_1} \cdots\cdots \sum_{j=1}^{k} \sum_{i=1}^{m} \frac{\partial w_j^i}{\partial \beta_1} \cdot \frac{1}{\sigma_j^i} \cdot \frac{\partial w_j^i}{\partial \beta_n} \\ \vdots \qquad\qquad\qquad\qquad \vdots \\ \sum_{j=1}^{k} \sum_{i=1}^{m} \frac{\partial w_j^i}{\partial \beta_n} \cdot \frac{1}{\sigma_j^i} \cdot \frac{\partial w_j^i}{\partial \beta_1} \cdots\cdots \sum_{j=1}^{k} \sum_{i=1}^{m} \frac{\partial w_j^i}{\partial \beta_n} \cdot \frac{1}{\sigma_j^i} \cdot \frac{\partial w_j^i}{\partial \beta_n} \end{pmatrix}} . \tag{29}$$

Next we can evaluate E where $E = T^T(\hat{\beta}_o)\ \Psi^{-1}(W - w(\hat{\beta}_o))$,

$$E = \underset{n \times km}{\begin{pmatrix} \frac{\partial w_1^1}{\partial \beta_1}, \cdots \frac{\partial w_1^m}{\partial \beta_1}, \cdots \frac{\partial w_k^1}{\partial \beta_1}, \cdots \frac{\partial w_k^m}{\partial \beta_1} \\ \vdots \\ \frac{\partial w_1^1}{\partial \beta_n}, \cdots \frac{\partial w_1^m}{\partial \beta_n}, \cdots \frac{\partial w_k^m}{\partial \beta_n}, \cdots \frac{\partial w_k^m}{\partial \beta_n} \end{pmatrix}} \underset{km \times km}{\Psi^{-1}} \underset{km \times 1}{\begin{pmatrix} W_1^1 - w_1^1(\beta_o) \\ \vdots \\ W_1^m - w_1^m(\beta_o) \\ \vdots \\ W_k^1 - w_k^1(\beta_o) \\ \vdots \\ W_k^m - w_k^m(\beta_o) \end{pmatrix}} ,$$

giving

$$E = \begin{array}{c} n \times 1 \\ \left(\begin{array}{c} \sum_{j=1}^{k} \sum_{i=1}^{m} \frac{\partial w_j^i}{\partial \beta_1} \cdot \frac{1}{\sigma_j^i} \cdot (W_j^i - w_j^i(\beta_o)) \\ \vdots \\ \sum_{j=1}^{k} \sum_{i=1}^{m} \frac{\partial w_j^i}{\partial \beta_n} \cdot \frac{1}{\sigma_j^i} \cdot (W_j^i - w_j^i(\beta_o)) \end{array} \right) \end{array} . \tag{30}$$

Therefore the elements of the matrices B and E are

$$b_{\ell p} = \sum_{j=1}^{k} \sum_{i=1}^{m} \frac{\partial w_j^i}{\partial \beta_\ell} \cdot \frac{1}{\sigma_j^i} \cdot \frac{\partial w_j^i}{\partial \beta_p} \tag{31}$$

$$e_\ell = \sum_{j=1}^{k} \sum_{i=1}^{m} \frac{\partial w_j^i}{\partial \beta_\ell} \cdot \frac{1}{\sigma_j^i} \cdot (W_j^i - w_j^i(\beta_o)) \quad . \tag{32}$$

For the kidney model, $\sigma_j^i = W_j^i$, $m = 4$, $k = N$, and the least-squares function (20) can be written as

$$R(\beta) = \sum_{j=1}^{N} \sum_{i=1}^{4} \frac{(W_j^i - w_j^i(\beta))^2}{W_j^i} \tag{33}$$

The Gauss-Newton algorithm is an iteration procedure which evaluates the inverse of the matrix B at each iteration and gives a new approximation for the minimum solution $\hat{\beta}$ using equation (27). Once δ_t has been evaluated a step size must be determined in order that β does not step out of the region of the local minimum. Hartley [8] describes an implementation of the Gauss-Newton algorithm and a method for evaluating this step size. However, the Gauss-Newton algorithm tends to diverge if β_o is not near the minimum $\hat{\beta}$.

5.3 The Gradient Vector δ_g

The gradient of the least-squares function, $R(\beta)$, is

$$\nabla R(\beta) = \delta_g = 2\ T^T(\hat{\beta}_o)\ \Psi^{-1}(W-w(\hat{\beta}_o)) \tag{34}$$

where the matrix T is defined in equation (22). Substituting E into the above equation, gives a relationship for the gradient,

$$\delta_g = 2E. \tag{35}$$

For the Taylor series correction vector, $\delta_t = B^{-1}E$, equation (35) gives a relationship between the Taylor series correction vector and the gradient vector

$$\delta_t = \tfrac{1}{2}\ B^{-1}\delta_g. \tag{36}$$

Marquardt [9] describes a modified steepest-descent algorithm using the gradient δ_g which determines the minimum of $R(\beta)$. However, these steepest-descent methods are very slow to converge when β_o is near the minimum $\hat{\beta}$.

5.4 The Marquardt Algorithm

The Marquardt algorithm interpolates between the Taylor series correction vector δ_t and the gradient correction vector δ_g. The algorithm is based on the following three theorems.

Theorem 1. Let $\lambda \geq 0$ be arbitrary and let δ_o satisfy the equation

$$(B + \lambda I)\delta_o = E.$$

Then δ_o minimizes

$$R(\delta) = \left[W-w(\beta_o) - T\ (\beta_o)\delta\right]^T \Psi^{-1} \left[W-w(\beta_o) - T(\beta_o)\delta\right]$$

on the sphere whose radius $||\delta||$ satisfies

$$||\delta||^2 = ||\delta_o||^2 .$$

Theorem 2. Let $\delta(\lambda)$ be the solution to the equation

$$(B + \lambda I)\delta = E$$

for a given value of λ. Then $||\delta(\lambda)||^2$ is a continuous decreasing function of λ, such that as $\lambda \to \infty$, $||\delta(\lambda)||^2 \to 0$.

Theorem 3. Let ϕ be the angle between $\delta(\lambda)$ and δ_g. Then ϕ is a continuous monotone decreasing function of λ such that as $\lambda \to \infty$, $\phi \to 0$. Since δ_g is independent of λ, it follows that δ_o rotates toward δ_g as $\lambda \to \infty$.

The proofs of these theorems are given by Marquardt [3] .

From Theorem 3 it is clear that there exists a large enough λ such that the least-squares function for the n+1 iteration satisfies $R^{n+1} < R^n$. However in regions where the Taylor series method converges nicely, especially near the minimum, we want small values of λ, whereas in regions where the Taylor series approximation is not adequate, λ must be increased until $R^{n+1} < R$. Therefore the algorithm selects λ to ensure that the optimum choice for λ is taken.

The Marquardt algorithm can be outlined as follows:

1. Select an initial solution β_o and an initial value for λ (say λ=.01) and let v = 10 and set $\beta=\beta_o$.

2. Let $\beta'=\beta$ and evaluate the least-squares function, $R=R(\beta)$ using equation (33).

3. Evaluate the matrices B and E from equations (31) and (32).

4. Evaluate the matrices B* and E* where

$$b^*_{ij} = b_{ij} / \sqrt{b_{ii}\, b_{jj}}$$

$$e^*_i = e_i / \sqrt{b_{ii}}$$

5. Solve for δ_1^* and δ_2^* where

$$\delta_1^* = (B^*+\lambda_1 I)^{-1} E^*$$

$$\delta_2^* = (B^*+\lambda_2 I)^{-1} E^*$$

and $\lambda_1 = \lambda$ and $\lambda_2 = \lambda/v$.

6. Evaluate δ_1 and δ_2 where

$$\delta_{1i} = \delta_{1i}^* / \sqrt{b_{ii}}$$

$$\delta_{2i} = \delta_{2i}^* / \sqrt{b_{ii}}$$

7. Scale δ_1 and δ_2 so that

$$|\delta_{1i}| \leq X_i \qquad \text{for all } i$$

$$|\delta_{2i}| \leq X_i$$

where X is a vector of maximum allowed step sizes.

8. Evaluate β_1 and β_2 where

$$\beta_1 = \beta_o + \delta_1$$

$$\beta_2 = \beta_o + \delta_2$$

9. Evaluate $R_1 = R(\beta_1(\lambda_1))$ and $R_2 = R(\beta_2(\lambda_2))$ using equation (33).

10. If $R_1 \leq R$ then let

$$\lambda = \lambda_1,\ \beta = \beta_1,\ \delta = \delta_1$$

and go to 11., else

if $R_1 > R$ and $R_2 < R$ then let

$$\lambda = \lambda_2,\ \beta = \beta_2,\ \delta = \delta_2$$

and go to 11., else go to 12.

11. Test for convergence: if

$$\frac{|\delta_i|}{\tau+|\alpha_i'|} < \varepsilon, \text{ for all } i$$

then stop; else return to 2. Marquardt suggested that possible values for τ and ε might be $\tau = 10^{-3}$ and $\varepsilon = 10^{-5}$.

12. Let $\lambda = v\lambda$.

13. Evaluate δ^* where

$$\delta^* = (B^* + \lambda I)^{-1} E$$

14. Evaluate δ where

$$\delta_i = \delta_i^* / \sqrt{b_{ii}}$$

15. Scale δ so that $|\delta_i| \leq X_i$ for all i, where X is the vector of maximum allowed step sizes.

16. Evaluate β where $\beta = \beta_o + \delta$.

17. Evaluate $R_3 = R(\beta(\lambda))$.

18. If $R_3 < R$ then go to 11., else go to 12.

For an initial solution β_o the Marquardt algorithm converges fairly rapidly to a local minimum. The initial choice of $\lambda = .01$ and $v = 10$ was suggested by Marquardt [4]. If necessary λ is decreased by the factor $1/v$ in step 5 or increased by the factor v in steps 12-18 in order that an optimum choice of λ is made which satisfies $R^{n+1} < R^n$. It has been found that λ usually does not get very large especially in the vicinity of the minimum.

The properties of the solution δ_t are scaled invariant under linear transformation whereas the properties of the gradient methods are not, thus it becomes necessary to choose an appropriate method for scaling the β-space which leads to the transformation

of the matrices B and E given in step 4. The new step sizes δ are evaluated using the equations in step 6. Marquardt points out that this choice of scaling is also used to improve the numerical aspects of the computating procedures. Step 7 of the algorithm is an added test to insure that the step size does not go beyond some desired bounds.

6.0 THE PARTIAL DERIVATIVES

The Marquardt and the Gauss Newton algorithms require the evaluation of the partial derivatives

$$\frac{\partial w_k^j}{\partial \beta_i}$$

in the matrix given by equation (31). The time functions $w^j(t)$ are a function of the system equations $q_i(t)$ which describe the kidney compartment model. These system equations can be expressed as a function of the following variables

$$q(t) = (q_1(t), q_2(t), q_3(t), q_4(t), q_5(t), q_6(t), q_7(t))$$

where

$$q_i(t) = f(t, \alpha_1, \alpha_2, \alpha_3, \alpha_4, \alpha_5, \alpha_6, \alpha_7, \alpha_8, A, A', B, B', P_1, P_2, \tau_1, \tau_2, u_1, u_2, u_3, u_4)$$

$$A = g_1(\alpha_2, P_1, P_2, u_1, u_2)$$

$$B = g_2(\alpha_2, P_1, P_2, u_1, u_2)$$

$$A' = g_1'(\alpha_1, P_1, P_2, u_1, u_2)$$

$$B' = g_2'(\alpha_1, P_1, P_2, P, u_1, u_2)$$

$$P_1 = h_1(\alpha_1, \alpha_2, \alpha_3, \alpha_4, \alpha_6, \alpha_7)$$

$$P_2 = h_2(\alpha_1, \alpha_2, \alpha_3, \alpha_4, \alpha_6, \alpha_7)$$

$$P = h_3(\alpha_1, \alpha_2, \alpha_3, \alpha_4, \alpha_6, \alpha_7)$$

For the system equation corresponding to the blood pool,

$$q_1(t) = A\, e^{P_1 t} + B\, e^{P_2 t}$$

$$= f(t, \alpha_1, \alpha_2, \alpha_3, \alpha_4, \alpha_6, \alpha_7, u_1, u_2).$$

The partial derivatives of $q_1(t)$ with respect to α_i $(i = 1,2,3,4,6,7)$ are

$$\frac{\partial q_i(t)}{\partial \alpha_i} = \frac{\partial A}{\partial \alpha_i} e^{P_1 t} - A \frac{\partial P_1}{\partial \alpha_i} t e^{P_1 t} + \frac{\partial B}{\partial \alpha_i} e^{P_2 t} + B \frac{\partial P_2}{\partial \alpha_i} t e^{P_2 t}$$

$$\frac{\partial q_1(t)}{\partial \alpha_5} = \frac{\partial q_1(t)}{\partial \alpha_8} = 0$$

$$\frac{\partial q_1(t)}{\partial u_1} = - \frac{P_1+\alpha_2}{P_2-P_1} e^{P_1 t} + \frac{P_2+\alpha_2}{P_2-P_1} e^{P_2 t}$$

$$\frac{\partial q_1(t)}{\partial u_2} = - \frac{\alpha_2}{P_2-P_1} e^{P_1 t} + \frac{\alpha_2}{P_2-P_1} e^{P_2 t}$$

$$\frac{\partial q_1(t)}{\partial u_3} = \frac{\partial q_1(t)}{\partial u_4} = 0$$

$$\frac{\partial q_1(t)}{\partial \tau_1} = \frac{\partial q_1(t)}{\partial \tau_2} = 0 \quad .$$

The function $q_2(t)$ corresponding to the extravascular pool, which like $q_1(t)$ is a function of $t, \alpha_1, \alpha_2, \alpha_3, \alpha_4, \alpha_6, \alpha_7, u_1, u_2$, :

$$q_2(t) = A' e^{P_1 t} + B' e^{P_2 t}.$$

The partials of $q_2(t)$ with respect to α_i $(i = 1,2,3,4,6,7)$ are

$$\frac{\partial q_2(t)}{\partial \alpha_i} = \frac{\partial A'}{\partial \alpha_i} e^{P_1 t} - A' \frac{\partial P_1}{\partial \alpha_i} t e^{P_1 t} + \frac{\partial B'}{\partial \alpha_i} e^{P_2 t} + B' \frac{\partial P_2}{\partial \alpha_i} t e^{P_2 t}$$

$$\frac{\partial q_2(t)}{\partial \alpha_5} = \frac{\partial q_2(t)}{\partial \alpha_8} = 0$$

$$\frac{\partial q_2(t)}{\partial u_1} = -\frac{\alpha_1}{P_2-P_1} e^{P_1 t} + \frac{\alpha_1}{P_2-P_1} e^{P_2 t}$$

$$\frac{\partial q_2(t)}{\partial u_2} = -\frac{P_1+P}{P_2-P_1} e^{P_1 t} + \frac{P+P_2}{P_2-P_1} e^{P_2 t}$$

$$\frac{\partial q_2(t)}{\partial u_3} = \frac{\partial q_2(t)}{\partial u_4} = 0$$

$$\frac{\partial q_2(t)}{\partial \tau_1} = \frac{\partial q_2(t)}{\partial \tau_2} = 0 \quad .$$

The function $q_3(t)$,

$$q_3(t) = \alpha_3 \left\{ A \cdot \frac{1}{\alpha_5+P_1} \left[e^{P_1 t} - e^{-\alpha_5 t} \right] + B \cdot \frac{1}{\alpha_5+P_2} \left[e^{P_2 t} - e^{-\alpha_5 t} \right] \right\}$$

$$+u_3 e^{-\alpha_5 t}$$

$$= f(t, \alpha_1, \alpha_2, \alpha_3, \alpha_4, \alpha_5, \alpha_6, \alpha_7, u_1, u_2, u_3),$$

describes the quantity of iodohippurate as a function of time in the tubular cells for the right kidney. For $i = 1,2,3,4,5,6,7$, the partial derivatives of $q_3(t)$ with respect to α_i are

$$\frac{\partial q_3(t)}{\partial \alpha_i} = \left\{ \frac{A}{\alpha_5+P_1} \left[e^{P_1 t} - e^{-\alpha_5 t} \right] + \frac{B}{\alpha_5+P_2} \left[e^{P_2 t} - e^{-\alpha_5 t} \right] \right\} \delta_{i3}$$

$$+ \alpha_3 \left\{ \frac{\partial A}{\partial \alpha_i} \cdot \frac{1}{\alpha_5+P_1} \left[e^{P_1 t} - e^{-\alpha_5 t} \right] - A \cdot \frac{1}{(\alpha_5+P_1)^2} \cdot \right.$$

$$\frac{\partial P_1}{\partial \alpha_i} \left[e^{P_1 t} - e^{-\alpha_5 t} \right]$$

$$+ \frac{A}{\alpha_5+P_1} \frac{\partial P_1}{\partial \alpha_i} t\, e^{P_1 t} + \frac{\partial B}{\partial \alpha_i} \frac{1}{\alpha_5+P_2} \left[e^{P_2 t} - e^{-\alpha_5 t} \right]$$

$$\left. - \frac{B}{(\alpha_5+P_2)^2} \frac{\partial P_2}{\partial \alpha_i} \left[e^{P_2 t} - e^{\alpha_5 t} \right] + \frac{B}{\alpha_5+P_2} \frac{\partial P_2}{\partial \alpha_i} t\, e^{P_2 t} \right\} .$$

For $i = 5$

$$\frac{\partial q_3(t)}{\partial \alpha_5} = \alpha_3 \left\{ - \frac{A}{(\alpha_5+P_1)^2} \left[e^{P_1 t} - e^{-\alpha_5 t} \right] + \frac{A}{\alpha_5+P_1} t\, e^{-\alpha_5 t} \right.$$

$$\left. - \frac{B}{(\alpha_5+P_2)^2} \left[e^{P_2 t} - e^{-\alpha_5 t} \right] + \frac{B}{\alpha_5+P_2} t\, e^{-\alpha_5 t} \right\}$$

$$- u_3 \; t\, e^{-\alpha_5 t} .$$

For $i = 8$

$$\frac{\partial q_3}{\partial \alpha_8} = 0 .$$

$$\frac{\partial q_3(t)}{\partial u_1} = \alpha_3 \left\{ - \frac{P_1+\alpha_2}{P_2-P_1} \frac{1}{\alpha_5+P_1} \left[e^{P_1 t} - e^{-\alpha_5 t} \right] + \frac{P_2+\alpha_2}{P_2-P_1} \frac{1}{\alpha_5+P_2} \left[e^{P_2 t} - e^{-\alpha_5 t} \right] \right\}$$

$$\frac{\partial q_3(t)}{\partial u_2} = \alpha_3 \left\{ - \frac{\alpha_2}{P_2-P_1} \frac{1}{\alpha_5+P_1} \left[e^{P_1 t} - e^{-\alpha_5 t} \right] + \frac{\alpha_2}{P_2-P_1} \frac{1}{\alpha_5+P_2} \left[e^{P_2 t} - e^{-\alpha_5 t} \right] \right\}$$

$$\frac{\partial q_3(t)}{\partial u_3} = e^{-\alpha_5 t}$$

$$\frac{\partial q_3(t)}{\partial u_4} = 0$$

$$\frac{\partial q_3}{\partial \tau_1} = \frac{\partial q_3}{\partial \tau_2} = 0 \quad .$$

The function $q_6(t)$ which is the quantity of iodohippurate in the tubular cell compartment for the left kidney has an expression similar to $q_3(t)$,

$$q_6(t) = \alpha_6 \left\{ \frac{A}{\alpha_8+P_1} \left[e^{P_1 t} - e^{-\alpha_8 t} \right] + \frac{B}{\alpha_8+P_2} \left[e^{P_2 t} - e^{-\alpha_8 t} \right] \right\} + u_4 \, e^{-\alpha_8 t} \; .$$

For $i = 1,2,3,4,6,7$, the partial derivatives of $q_6(t)$ with respect

to α_i are

$$\frac{\partial q_6(t)}{\partial \alpha_i} = \left\{ \frac{A}{\alpha_8+P_1}\left[e^{P_1 t} - e^{-\alpha_8 t}\right] + \frac{B}{\alpha_8+P_2}\left[e^{P_2 t} - e^{-\alpha_8 t}\right]\right\} \delta_{i6}$$

$$+ \alpha_6 \left\{ \frac{\partial A}{\partial \alpha_i} \frac{1}{\alpha_8+P_1}\left[e^{P_1 t} - e^{-\alpha_8 t}\right] - \frac{A}{(\alpha_8+P_1)^2} \frac{\partial P_1}{\partial \alpha_i}\left[e^{P_1 t} - e^{-\alpha_8 t}\right]\right.$$

$$+ \frac{A}{\alpha_8+P_1} \frac{\partial P_1}{\partial \alpha_i} t\, e^{P_1 t} + \frac{\partial B}{\partial \alpha_i} \frac{1}{\alpha_8+P_2}\left[e^{P_2 t} - e^{-\alpha_8 t}\right]$$

$$\left. - \frac{B}{(\alpha_8+P_2)^2} \frac{\partial P_2}{\partial \alpha_i}\left[e^{P_2 t} - e^{\alpha_8 t}\right] + \frac{B}{(\alpha_8+P_2)} \frac{\partial P_2}{\partial \alpha_i} t\, e^{P_2 t}\right\} .$$

For i = 5

$$\frac{\partial q_6(t)}{\partial \alpha_5} = 0 .$$

For i = 8

$$\frac{\partial q_6(t)}{\partial \alpha_8} = \alpha_6 \left\{ - \frac{A}{(\alpha_8+P_1)^2}\left[e^{P_1 t} - e^{-\alpha_8 t}\right] + \frac{A}{\alpha_8+P_1} t\, e^{-\alpha_8 t}\right.$$

$$- \frac{B}{(\alpha_8+P_1)^2}\left[e^{P_1 t} - e^{-\alpha_8 t}\right]$$

$$\left. + \frac{B}{\alpha_8+P_2} t\, e^{-\alpha_8 t}\right\} - u_4\, t\, e^{-\alpha_8 t} .$$

$$\frac{\partial q_6(t)}{\partial u_1} = \alpha_6 \left\{ - \frac{P_1+\alpha_2}{P_2-P_1} \frac{1}{\alpha_8+P_1}\left[e^{P_1 t} - e^{-\alpha_8 t}\right]\right.$$

$$\left. + \frac{P_2+\alpha_2}{P_2-P_1} \frac{1}{\alpha_8+P_2}\left[e^{P_2 t} - e^{-\alpha_8 t}\right]\right\}$$

$$\frac{\partial q_6(t)}{\partial u_2} = \alpha_6 \left\{ - \frac{\alpha_2}{P_2-P_1} \frac{1}{\alpha_8+P_1} \left[e^{P_1 t} - e^{-\alpha_8 t} \right] + \frac{\alpha_2}{P_2-P_1} \frac{1}{\alpha_8+P_2} \left[e^{P_2 t} - e^{-\alpha_8 t} \right] \right\}$$

$$\frac{\partial q_6(t)}{\partial u_3} = 0$$

$$\frac{\partial q_6(t)}{\partial u_4} = e^{-\alpha_8 t}$$

$$\frac{\partial q_6(t)}{\partial \tau_1} = \frac{\partial q_6(t)}{\partial \tau_2} = 0 \ .$$

The functions $q_4(t)$ and $q_7(t)$, which measure the quantity of iodohippurate for the right and left kidney estuaries respectively, have similar expressions. First $q_4(t)$ has the expression

$$q_4(t) = \alpha_3\alpha_5 \left\{ \frac{A}{\alpha_5+P_1} \left[\frac{1}{P_1} (e^{P_1 t} - 1) - \frac{1}{\alpha_5} (1 - e^{-\alpha_5 t}) \right] + \frac{B}{\alpha_5+P_2} \left[\frac{1}{P_2} (e^{P_2 t} - 1) - \frac{1}{\alpha_5} (1 - e^{-\alpha_5 t}) \right] \right\} + u_3(1 - e^{-\alpha_5 t})$$

$$+ \alpha_4 \left\{ \frac{A}{P_1} (e^{P_1 t} - 1) + \frac{B}{P_2} (e^{P_2 t} - 1) \right\}$$

$$= f(t) \qquad \text{for } t < \tau_1$$

$$q_4(t) = f(t) - f(t-\tau_1) \qquad \text{for } t > \tau_1 \ .$$

For $i = 1,2,3,4,6,7$

$$\frac{\partial q_4(t)}{\partial \alpha_i} = \alpha_5 \left\{ \frac{A}{\alpha_5+P_1} \left[\frac{1}{P_1} (e^{P_1 t} - 1) - \frac{1}{\alpha_5} (1 - e^{-\alpha_5 t}) \right] \right.$$

$$\left. + \frac{B}{\alpha_5+P_2} \left[\frac{1}{P_2} (e^{P_2 t} - 1) - \frac{1}{\alpha_5} (1 - e^{-\alpha_5 t}) \right] \right\} \delta_{i3}$$

$$+ \left\{ \frac{A}{P_1} (e^{P_1 t} - 1) + \frac{B}{P_2} (e^{P_2 t} - 1) \right\} \delta_{i4}$$

$$+ \alpha_3 \alpha_5 \left\{ \frac{\partial A}{\partial \alpha_i} \frac{1}{\alpha_5+P_1} \left[\frac{1}{P_1} (e^{P_1 t} - 1) - \frac{1}{\alpha_5} (1 - e^{-\alpha_5 t}) \right] \right.$$

$$- \frac{A}{(\alpha_5+P_1)^2} \frac{\partial P_1}{\partial \alpha_i} \left[(e^{P_1 t} - 1)/P_1 - (1 - e^{-\alpha_5 t})/\alpha_5 \right]$$

$$+ \frac{A}{\alpha_5+P_1} \left[- \frac{\partial P_1}{\partial \alpha_i} (e^{P_1 t} - 1)/P_1^{\,2} + t \frac{\partial P_1}{\partial \alpha_i} e^{P_1 t}/P_1 \right]$$

$$+ \frac{\partial B}{\partial \alpha_i} \frac{1}{\alpha_5+P_2} \left[\frac{1}{P_2} (e^{P_2 t} - 1) - \frac{1}{\alpha_5} (1 - e^{-\alpha_5 t}) \right]$$

$$- \frac{B}{(\alpha_5+P_2)^2} \frac{\partial P_2}{\partial \alpha_i} \left[(e^{P_2 t} - 1)/P_2 - (1 - e^{-\alpha_5 t})/\alpha_5 \right]$$

$$\left. + \frac{B}{\alpha_5+P_2} \left[- \frac{\partial P_2}{\partial \alpha_i} (e^{P_2 t} - 1)/P_2^{\,2} + t \frac{\partial P_2}{\partial \alpha_i} e^{P_2 t}/P_2 \right] \right\}$$

$$+ \alpha_4 \left\{ \frac{\partial A}{\partial \alpha_i} (e^{P_1 t} - 1)/P_1 - A \frac{\partial P_1}{\partial \alpha_i} (e^{P_1 t} - 1)/P_1^{\,2} \right.$$

$$+ A\, t \frac{\partial P_1}{\partial \alpha_i} e^{P_1 t}/P_1 + \frac{\partial B}{\partial \alpha_i} (e^{P_2 t} - 1)/P_2$$

$$\left. - B \frac{\partial P_2}{\partial \alpha_i} (e^{P_2 t} - 1)/P_2^{\,2} + B\, t \frac{\partial P_2}{\partial \alpha_i} e^{P_2 t}/P_2 \right\}$$

$$= f_i(t) \qquad \text{if } t < \tau_1$$

$$\frac{\partial q_4(t)}{\partial \alpha_i} = f_i(t) - f_i(t-\tau_1) \qquad \text{if } t > \tau_1 \ .$$

For i = 5

$$\frac{\partial q_4(t)}{\partial \alpha_5} = \alpha_3 \left\{ \frac{A}{\alpha_5+P_1} \left[\frac{1}{P_1} (e^{P_1 t} - 1) - \frac{1}{\alpha_5} (1 - e^{-\alpha_5 t}) \right] \right.$$

$$\left. + \frac{B}{\alpha_5+P_2} \left[\frac{1}{P_2} (e^{P_2 t} - 1) - \frac{1}{\alpha_5} (1 - e^{-\alpha_5 t}) \right] \right\}$$

$$+ \alpha_3 \alpha_5 \left\{ - \frac{A}{(\alpha_5+P_1)^2} \left[(e^{P_1 t} - 1)/P_1 - (1 - e^{-\alpha_5 t})/\alpha_5 \right] \right.$$

$$+ \frac{A}{\alpha_5+P_1} \left[(1 - e^{-\alpha_5 t})/\alpha_5^{\,2} - t\, e^{-\alpha_5 t}/\alpha_5 \right]$$

$$- \frac{B}{(\alpha_5+P_2)^2} \left[(e^{P_2 t} - 1)/P_2 - (1 - e^{-\alpha_5 t})/\alpha_5 \right]$$

$$\left. + \frac{B}{\alpha_5+P_2} \left[(1 - e^{-\alpha_5 t})/\alpha_5^{\,2} - t\, e^{-\alpha_5 t}/\alpha_5 \right] \right\}$$

$$+ u_3\, t\, e^{-\alpha_5 t}$$

$$= \quad f_5(t) \qquad \text{if } t \leq \tau_1$$

$$\frac{\partial q_4(t)}{\partial \alpha_5} = f_5(t) - f_5(t-\tau_1) \qquad \text{if } t > \tau_1 \quad .$$

For i = 8

$$\frac{\partial q_4(t)}{\partial \alpha_8} = 0 \quad .$$

$$\frac{\partial q_4(t)}{\partial u_1} = \alpha_3\alpha_5 \left\{ -\frac{P_1+\alpha_2}{P_2-P_1} \frac{1}{\alpha_5+P_1} \left[(e^{P_1 t} - 1)/P_1 - (1 - e^{-\alpha_5 t})/\alpha_5 \right] \right.$$

$$\left. + \frac{P_2+\alpha_2}{P_2-P_1} \frac{1}{\alpha_5+P_2} \left[(e^{P_2 t} - 1)/P_2 - (1 - e^{-\alpha_5 t})/\alpha_5 \right] \right\}$$

$$+ \alpha_4 \left\{ -\frac{P_1+\alpha_2}{P_2-P_1} \frac{1}{P_1} (e^{P_1 t} - 1) + \frac{P_2+\alpha_2}{P_2-P_1} \frac{1}{P_2} (e^{P_2 t} - 1) \right\}$$

$$= f_{u_1}(t) \qquad \text{for } t \leq \tau_1$$

$$\frac{\partial q_4(t)}{\partial u_1} = f_{u_1}(t) - f_{u_1}(t-\tau_1) \qquad \text{for } t > \tau_1$$

$$\frac{\partial q_4(t)}{\partial u_2} = \alpha_3\alpha_5 \left\{ -\frac{\alpha_2}{P_2-P_1} \frac{1}{\alpha_5+P_1} \left[(e^{P_1 t} - 1)/P_1 - (1 - e^{-\alpha_5 t})/\alpha_5 \right] \right.$$

$$\left. + \frac{\alpha_2}{P_2-P_1} \frac{1}{\alpha_5+P_2} \left[(e^{P_2 t} - 1)/P_2 - (1 - e^{-\alpha_5 t})/\alpha_5 \right] \right\}$$

$$+ \alpha_4 \left\{ -\frac{\alpha_2}{P_2-P_1} \frac{1}{P_1} (e^{P_1 t} - 1) + \frac{\alpha_2}{P_2-P_1} \frac{1}{P_2} (e^{P_2 t} - 1) \right\}$$

$$= f_{u_2}(t) \qquad \text{for } t \leq \tau_1$$

$$\frac{\partial q_4(t)}{\partial u_2} = f_{u_2}(t) - f_{u_2}(t-\tau_1) \qquad \text{for } t > \tau_1$$

$$\frac{\partial q_4(t)}{\partial u_3} = \begin{cases} f_{u_3}(t) = (1 - e^{-\alpha_5 t}) & \text{if } t \leq \tau_1 \\ f_{u_3}(t) - f_{u_3}(t-\tau_1) & \text{if } t > \tau_1 \end{cases}$$

$$\frac{\partial q_4(t)}{\partial u_4} = 0 \quad .$$

For τ_1

$$\frac{\partial q_4(t)}{\partial \tau_1} = 0 \qquad \text{if } t \leq \tau_1$$

$$\frac{\partial q_4(t)}{\partial \tau_1} = -\alpha_3\alpha_5 \left\{ \frac{A}{\alpha_5+P_1} \left[e^{-\alpha_5(t-\tau_1)} - e^{P_1(t-\tau_1)} \right] + \frac{B}{\alpha_5+P_2} \left[e^{-\alpha_5(t-\tau_1)} - e^{P_2(t-\tau_1)} \right] \right\}$$

$$+ u_3\alpha_5 \, e^{-\alpha_5(t-\tau_1)} + \alpha_4 \left\{ A \, e^{P_1(t-\tau_1)} + B \, e^{P_2(t-\tau_1)} \right\}$$

$$= -f_{\tau_1}(t-\tau_1) \qquad \text{if } t > \tau_1 \; .$$

For τ_2

$$\frac{\partial q_4(t)}{\partial \tau_2} = 0 \; .$$

The function $q_7(t)$ has the form

$$q_7(t) = \alpha_6\alpha_8 \left\{ \frac{A}{\alpha_8+P_1} \left[\frac{1}{P_1} (e^{P_1 t} - 1) - \frac{1}{\alpha_8} (1 - e^{-\alpha_8 t}) \right] + \frac{B}{\alpha_8+P_2} \left[\frac{1}{P_2} (e^{P_2 t} - 1) - \frac{1}{\alpha_8} (1 - e^{-\alpha_8 t}) \right] \right\} + u_4(1 - e^{-\alpha_8 t}) + \alpha_7 \left\{ \frac{A}{P_1} (e^{P_1 t} - 1) + \frac{B}{P_2} (e^{P_2 t} - 1) \right\}$$

$$= g\,(t) \qquad \text{for } t < \tau_2$$

$$q_7(t) = g(t) - g(t-\tau_2) \qquad \text{for } t \geq \tau_2 \; .$$

The partial derivatives for q_7 have expressions similar to the partial derivatives of q_4, for i = 1,2,3,4,6,7

$$\frac{\partial q_7(t)}{\partial \alpha_i} = \alpha_8 \left\{ \frac{A}{\alpha_8+P_1} \left[\frac{1}{P_1} (e^{P_1 t} - 1) - \frac{1}{\alpha_8} (1 - e^{-\alpha_8 t}) \right] \right.$$

$$\left. + \frac{B}{\alpha_8+P_2} \left[\frac{1}{P_2} (e^{P_2 t} - 1) - \frac{1}{\alpha_8} (1 - e^{-\alpha_8 t}) \right] \right\} \delta_{i6}$$

$$+ \left\{ \frac{A}{P_1} (e^{P_1 t} - 1) + \frac{B}{P_2} (e^{P_2 t} - 1) \right\} \delta_{i7}$$

$$+ \alpha_6 \alpha_8 \left\{ \frac{\partial A}{\partial \alpha_i} \frac{1}{\alpha_8+P_1} \left[\frac{1}{P_1} (e^{P_1 t} - 1) - \frac{1}{\alpha_8} (1 - e^{-\alpha_8 t}) \right] \right.$$

$$- \frac{A}{(\alpha_8+P_1)^2} \frac{\partial P_1}{\partial \alpha_i} \left[\frac{1}{P_1} (e^{P_1 t} - 1) - \frac{1}{\alpha_8} (1 - e^{-\alpha_8 t}) \right]$$

$$+ \frac{A}{\alpha_8+P_1} \left[- \frac{\partial P_1}{\partial \alpha_i} (e^{P_1 t} - 1)/P_1^{\,2} + t \frac{\partial P_1}{\partial \alpha_i} e^{P_1 t}/P_1 \right]$$

$$+ \frac{\partial B}{\partial \alpha_i} \frac{1}{\alpha_8+P_2} \left[\frac{1}{P_2} (e^{P_2 t} - 1) - \frac{1}{\alpha_8} (1 - e^{-\alpha_8 t}) \right]$$

$$- \frac{B}{(\alpha_8+P_2)^2} \frac{\partial P_2}{\partial \alpha_i} \left[\frac{1}{P_2} (e^{P_2 t} - 1) - \frac{1}{\alpha_8} (1 - e^{-\alpha_8 t}) \right]$$

$$\left. + \frac{B}{\alpha_8+P_2} \left[- \frac{\partial P_2}{\partial \alpha_i} (e^{P_2 t} - 1)/P_2^{\,2} + t \frac{\partial P_2}{\partial \alpha_i} e^{P_2 t}/P_2 \right] \right\}$$

$$+ \alpha_7 \left\{ \frac{\partial A}{\partial \alpha_i} (e^{P_1 t} - 1)/P_1 - A \frac{\partial P_1}{\partial \alpha_i} (e^{P_1 t} - 1)/P_1^{\,2} \right.$$

$$+ A\, t \frac{\partial P_1}{\partial \alpha_i} e^{P_1 t}/P_1 + \frac{\partial B}{\partial \alpha_i} (e^{P_2 t} - 1)/P_2$$

$$\left. - B \frac{\partial P_2}{\partial \alpha_i} (e^{P_2 t} - 1)/P_2^{\,2} + B\, t \frac{\partial P_2}{\partial \alpha_i} e^{P_2 t}/P_2 \right\}$$

$$= g_i(t) \qquad \text{if } t \leq \tau_2$$

$$\frac{\partial q_7(t)}{\partial \alpha_i} = g_i(t) - g_i(t-\tau_2) \qquad \text{if } t > \tau_2 \ .$$

For i = 5

$$\frac{\partial q_7(t)}{\partial \alpha_5} = 0 \ .$$

For i = 8

$$\begin{aligned}
\frac{\partial q_7(t)}{\partial \alpha_8} = \alpha_6 \Bigg\{ & \frac{A}{\alpha_8+P_1}\left[\frac{1}{P_1}\left(e^{P_1 t} - 1\right) - \frac{1}{\alpha_8}\left(1 - e^{-\alpha_8 t}\right)\right] \\
& + \frac{B}{\alpha_8+P_2}\left[\frac{1}{P_2}\left(e^{P_2 t} - 1\right) - \frac{1}{\alpha_8}\left(1 - e^{-\alpha_8 t}\right)\right] \Bigg\} \\
& + \alpha_6\alpha_8 \Bigg\{ - \frac{A}{(\alpha_8+P_1)^2}\left[\frac{1}{P_1}\left(e^{P_1 t} - 1\right) - \frac{1}{\alpha_8}\left(1 - e^{-\alpha_8 t}\right)\right] \\
& + \frac{A}{\alpha_8+P_1}\left[\left(1 - e^{-\alpha_8 t}\right)/\alpha_8^{\,2} - t\, e^{-\alpha_8 t}/\alpha_8\right] \\
& - \frac{B}{(\alpha_8+P_2)^2}\left[\frac{1}{P_2}\left(e^{P_2 t} - 1\right) - \frac{1}{\alpha_8}\left(1 - e^{-\alpha_8 t}\right)\right] \\
& + \frac{B}{\alpha_8+P_2}\left[\left(1 - e^{-\alpha_8 t}\right)/\alpha_8^{\,2} - t\, e^{-\alpha_8 t}/\alpha_8\right] \Bigg\} \\
& + u_4\, t\, e^{-\alpha_8 t} \\
= g_8(t) & \qquad \text{if } t \leq \tau_2
\end{aligned}$$

$$\frac{\partial q_7(t)}{\partial \alpha_8} = g_8(t) - g_8(t-\tau_2) \qquad \text{if } t > \tau_2 \ .$$

$$\frac{\partial q_7(t)}{\partial u_1} = \alpha_6\alpha_8 \left\{ -\frac{P_1+\alpha_2}{P_2-P_1} \frac{1}{\alpha_8+P_1} \left[(e^{P_1 t} - 1)/P_1 - (1 - e^{-\alpha_8 t})/\alpha_8 \right] \right.$$

$$\left. + \frac{P_2+\alpha_2}{P_2-P_1} \frac{1}{\alpha_8+P_2} \left[(e^{P_2 t} - 1)/P_2 - (1 - e^{-\alpha_8 t})/\alpha_8 \right] \right\}$$

$$+ \alpha_7 \left\{ -\frac{P_1+\alpha_2}{P_2-P_1} \frac{1}{P_1} (e^{P_1 t} - 1) + \frac{P_2+\alpha_2}{P_2-P_1} \frac{1}{P_2} (e^{P_2 t} - 1) \right\}$$

$$= g_{u_1}(t) \qquad \text{for } t \leq \tau_2$$

$$\frac{\partial q_7(t)}{\partial u_1} = g_{u_1}(t) - g_{u_1}(t-\tau_2) \qquad \text{for } t > \tau_2$$

$$\frac{\partial q_7(t)}{\partial u_2} = \alpha_6\alpha_8 \left\{ -\frac{\alpha_2}{P_2-P_1} \frac{1}{\alpha_8+P_1} \left[(e^{P_1 t} - 1)/P_1 - (1 - e^{-\alpha_8 t})/\alpha_8 \right] \right.$$

$$\left. + \frac{\alpha_2}{P_2-P_1} \frac{1}{\alpha_8+P_2} \left[(e^{P_2 t} - 1)/P_2 - (1 - e^{-\alpha_8 t})/\alpha_8 \right] \right\}$$

$$+ \alpha_7 \left\{ -\frac{\alpha_2}{P_2-P_1} \frac{1}{P_1} (e^{P_1 t} - 1) + \frac{\alpha_2}{P_2-P_1} \frac{1}{P_2} (e^{P_2 t} - 1) \right\}$$

$$= g_{u_2}(t) \qquad \text{for } t \leq \tau_2$$

$$\frac{\partial q_7(t)}{\partial u_2} = g_{u_2}(t) - g_{u_2}(t-\tau_2) \qquad \text{if } t > \tau_2$$

$$\frac{\partial q_7(t)}{\partial u_3} = 0$$

$$\frac{\partial q_7(t)}{\partial u_4} = \begin{cases} g_{u_4}(t) = (1 - e^{-\alpha_8 t}) & \text{if } t \leq \tau_2 \\ g_{u_4}(t) - g_{u_4}(t-\tau_2) & \text{if } t > \tau_2 \end{cases}$$

For τ_1

$$\frac{\partial q_7(t)}{\partial \tau_1} = 0 \quad .$$

For τ_2

$$\frac{\partial q_7(t)}{\partial \tau_2} = 0 \qquad \text{if } t \leq \tau_2$$

$$\begin{aligned}\frac{\partial q_7(t)}{\partial \tau_2} &= -\alpha_6\alpha_8 \left\{ \frac{A}{\alpha_8+P_1}\left[e^{-\alpha_8(t-\tau_2)} - e^{P_1(t-\tau_2)}\right] \right. \\ &\quad \left. + \frac{B}{\alpha_8+P_2}\left[e^{-\alpha_8(t-\tau_2)} - e^{P_2(t-\tau_2)}\right] \right\} \\ &\quad + u_4\alpha_8\, e^{-\alpha_8(t-\tau_2)} + \alpha_7 \left\{ A\, e^{P_1(t-\tau_2)} + B\, e^{P_2(t-\tau_1)} \right\} \\ &= -g_{\tau_2}(t-\tau_2) \qquad \text{if } t > \tau_2 \ .\end{aligned}$$

The function $q_5(t)$ represents the quantity of iodohippurate as a function of time for the bladder and has the expression

$$q_5(t) = \begin{cases} 0 & \text{if } t < m \\ g(t-\tau_2) & \text{if } m < t < M;\ m = \tau_2 \\ f(t-\tau_1) & \text{if } m < t < M;\ m = \tau_1 \\ g(t-\tau_2) + f(t-\tau_1) & \text{if } t > M \end{cases}$$

where $m = \min(\tau_1, \tau_2)$ and $M = \max(\tau_1, \tau_2)$. The partial derivatives of $g(t)$ and $f(t)$ with respect to α_i, u_i, τ_i have previously been evaluated in the determination of the partial derivatives for q_4 and q_7. Therefore the partial derivatives of $q_5(t)$ with respect to α_i, u_i, τ_i are

$$\frac{\partial q_5(t)}{\partial x} = \begin{cases} 0 & \text{if } t < m \\ g_x(t-\tau_2) & \text{if } m < t < M;\ m = \tau_2 \\ f_x(t-\tau_1) & \text{if } m < t < M;\ m = \tau_1 \\ g_x(t-\tau_2) + f_x(t-\tau_1) & \text{if } t > M \end{cases}$$

where $x = \alpha_i,\ u_i,\ \tau_i$.

The variables P_1 and P_2 are functions of α_i, $i = 1,2,3,4,6,7$ and have the functional relationships

$$P_1 = \frac{-(P+\alpha_2) + S1}{2}$$

$$P_2 = \frac{-(P+\alpha_2) - S1}{2}$$

where

$$S1 = [(P+\alpha_2)^2 - 4\alpha_2(P-\alpha_1)]^{\frac{1}{2}}$$

and

$$P = \alpha_1+\alpha_3+\alpha_4+\alpha_6+\alpha_7 .$$

The partial derivatives of P_1 and P_2 with respect to α_i, $i = 1,2,3,4,6,7$ are

$$\frac{\partial P_1}{\partial \alpha_1} = \frac{-S1+\alpha_2+P}{2S1}$$

$$\frac{\partial P_1}{\partial \alpha_2} = \frac{-S1+\alpha_2+2\alpha_1-P}{2S1}$$

$$\frac{\partial P_1}{\partial \alpha_3} = \frac{-S1-\alpha_2+P}{2S1}$$

$$\frac{\partial P_1}{\partial \alpha_4} = \frac{\partial P_1}{\partial \alpha_6} = \frac{\partial P_1}{\partial \alpha_7} = \frac{\partial P_1}{\partial \alpha_3}$$

$$\frac{\partial P_2}{\partial \alpha_1} = \frac{-S1-\alpha_2-P}{2S1}$$

$$\frac{\partial P_2}{\partial \alpha_2} = \frac{-S1-\alpha_2-2\alpha_1+P}{2S1}$$

$$\frac{\partial P_2}{\partial \alpha_3} = \frac{-S1+\alpha_2-P}{2S1}$$

$$\frac{\partial P_2}{\partial \alpha_4} = \frac{\partial P_2}{\partial \alpha_6} = \frac{\partial P_2}{\partial \alpha_7} = \frac{\partial P_2}{\partial \alpha_3} .$$

The variables A, B, A', and B' are functions of α_i, $i = 1,2,3,4,6,7$

$$A = \frac{-u_1P_1-u_1\alpha_2-u_2\alpha_2}{P_2-P_1}$$

$$B = \frac{u_1\alpha_2+\alpha_2u_2+u_1P_2}{P_2-P_1}$$

$$A' = \frac{-u_2P_1-u_2P-\alpha_1u_1}{P_2-P_1}$$

$$B' = \frac{u_2P+\alpha_1u_1+u_2P_2}{P_2-P_1} .$$

For $i = 1,3,4,6,7$

$$\frac{\partial A}{\partial \alpha_i} = \frac{(u_1P_1+u_1\alpha_2+u_2\alpha_2)\frac{\partial P_2}{\partial \alpha_1} - (u_1P_2+u_1\alpha_2+u_2\alpha_2)\frac{\partial P_1}{\partial \alpha_2}}{(P_2-P_1)^2}$$

$$\frac{\partial B}{\partial \alpha_i} = -\frac{\partial A}{\partial \alpha_i} .$$

For $i = 2$

$$\frac{\partial A}{\partial \alpha_2} = \frac{(u_1P_1+u_1\alpha_2+u_2\alpha_2)\frac{\partial P_2}{\partial \alpha_2} - (u_1P_2+u_1\alpha_2+u_2\alpha_2)\frac{\partial P_1}{\partial \alpha_2} + (u_1+u_2)(P_1-P_2)}{(P_2-P_1)^2}$$

$$\frac{\partial B}{\partial \alpha_2} = - \frac{\partial A}{\partial \alpha_2} \quad .$$

For i = 1

$$\frac{\partial A'}{\partial \alpha_1} = \frac{(u_2P_1+u_2P+\alpha_1u_1)\frac{\partial P_2}{\partial \alpha_1} - (u_2P_2+u_2P+\alpha_1u_1)\frac{\partial P_1}{\partial \alpha_2} + (u_1+u_2)(P_1-P_2)}{(P_2-P_1)^2}$$

$$\frac{\partial B'}{\partial \alpha_1} = - \frac{\partial A'}{\partial \alpha_1} \quad .$$

For i = 2

$$\frac{\partial A'}{\partial \alpha_2} = \frac{(u_2P_1+u_2P+\alpha_1u_1)\frac{\partial P_2}{\partial \alpha_2} - (u_2P_2+u_2P+\alpha_1u_1)\frac{\partial P_2}{\partial \alpha_2}}{(P_2-P_1)^2}$$

$$\frac{\partial B'}{\partial \alpha_2} = - \frac{\partial A'}{\partial \alpha_2} \quad .$$

For i = 3,4,6,7

$$\frac{\partial A'}{\partial \alpha_i} = \frac{(u_2P_1+u_2P+\alpha_1u_1)\frac{\partial P_2}{\partial \alpha_i} - (u_2P_2+u_2P+\alpha_1u_1)\frac{\partial P_1}{\partial \alpha_i} + u_2(P_1-P_2)}{(P_2-P_1)^2}$$

$$\frac{\partial B'}{\partial \alpha_i} = - \frac{\partial A'}{\partial \alpha_i} \quad .$$

Instead of giving explicit expressions for each partial derivative, numerical differencing methods or numerical initial value methods used to solve ordinary differential equations [10] can be used to evaluate the partial derivatives of the compartment equations with respect to the model parameters. If we denote the system of compartment equations by q and the system of differential equations given in Section 2 by q', then

$$\frac{d}{dt}\left(\frac{\partial q}{\partial \beta}\right) = \frac{\partial q'}{\partial \beta} + \frac{\partial q'}{\partial q}\frac{\partial q}{\partial \beta}$$

is a system of differential equations in terms of the dependent variable $\partial q/\partial \beta$ and the independent variable t. The system of equations q' is a function of q and β and one can easily give an explicit expression for $\partial q'/\partial \beta$ and $\partial q'/\partial q$. A solution to this system of ordinary differential equations is evaluated using either an implicit or explicit Runge-Kutta method. To implement these methods, one needs to be concerned with stability of the solution and also whether the system is stiff. The computer time required to evaluate the partial derivatives by such numerical methods may also be impractical.

7.0 COVARIANCE MATRIX FOR THE PARAMETERS

The covariance matrix for the estimated parameters gives the expected correlation between parameters and gives a measure of how the estimates are expected to vary for data samples taken under the same experimental conditions. The covariance matrix is a function of the measured errors if the weighting matrix ψ is chosen to be the covariance matrix of the noise random variables. The diagonal elements of the covariance matrix are the variances for the estimated parameters. For the parameters of the kidney model the ratio of the signal (estimate) to the variance increases linearly as the counting rate increases between 2000 and 10000 counts per 15 seconds. The off diagonal elements are the covariances which are a measure of the degree of correlation between the model parameters. This section will point out those parameters in the kidney model which have a high degree of correlation.

Assuming that β is the true value of the parameter, we can give expressions for the variance and covariance of $\hat{\beta}$ using the definitions

$$\mathrm{var}(\hat{\beta}) = E[(\hat{\beta}_i - \beta_i)^2]$$

$$\mathrm{cov}(\hat{\beta}_i , \hat{\beta}_j) = E[(\hat{\beta}_i - \beta_i)(\hat{\beta}_j - \beta_j)].$$

Expressing this in matrix notation gives the covariance matrix Φ which is defined to be

$$\Phi = \begin{pmatrix} E[(\hat{\beta}_1-\beta_1)^2] & E[(\hat{\beta}_1-\beta_1)(\hat{\beta}_2-\beta_2)] & \cdots & E[(\hat{\beta}_1-\beta_1)(\hat{\beta}_n-\beta_n)] \\ E[(\hat{\beta}_2-\beta_2)(\hat{\beta}_1-\beta_1)] & E[(\hat{\beta}_2-\beta_2)^2] & & \vdots \\ \vdots & & & \vdots \\ E[(\hat{\beta}_n-\beta_n)(\hat{\beta}_1-\beta_1)] & \cdots & \cdots & E[(\hat{\beta}_n-\beta_n)^2] \end{pmatrix}$$

For the matrix C, we use the notation E {C} to mean the same thing as the matrix D where the elements of D satisfy $d_{ij} = E[c_{ij}]$. Therefore we can rewrite the covariance matrix Φ, giving

$$\Phi = E \left\{ (\hat{\beta}-\beta)(\hat{\beta}-\beta)^T \right\} . \tag{37}$$

The distribution for the estimate $\hat{\beta}$ is the direct result of the noise in the methods used to detect time function activity. This noise is measured and represented by the weighting matrix Ψ. The claim is that the covariance matrix for the parameter β is

$$\Phi = B^{-1} = f(\Psi) ,$$

where B is the matrix given in equation (29) at the final iteration.

To prove this result first substitute $\hat{\beta} = \hat{\beta}_o + B^{-1} E$ into equation (37) giving

$$\Phi = E \left\{ (\hat{\beta}_o+B^{-1}E-\beta)(\hat{\beta}_o+B^{-1}E-\beta)^T \right\}$$

$$= E \left\{ \hat{\beta}_o\hat{\beta}_o^T + (B^{-1}E)(\hat{\beta}_o)^T + \hat{\beta}_o(B^{-1}E)^T + (B^{-1}E)(B^{-1}E)^T \right.$$

$$\left. -\hat{\beta}_o\beta^T - B^{-1}E\beta^T - \beta\hat{\beta}_o^T - \beta(B^{-1}E)^T + \beta\beta^T \right\} , \tag{38}$$

where $B = T^T(\hat{\beta}_o)\ \Psi^{-1}\ T(\hat{\beta}_o)$. Since $E = T^T(\hat{\beta}_o)\ \Psi^{-1} [\ R-w(\hat{\beta}_o)\ ]$, therefore we can substitute E into equation (38) giving

$$\Phi = E \left\{ \hat{\beta}_o\hat{\beta}_o^T + B^{-1}T^T(\hat{\beta}_o)\ \Psi^{-1}\ [\ R-w(\hat{\beta}_o)\ ]\ \hat{\beta}_o^T \right.$$

$$+ \hat{\beta}_o(B^{-1}T^T(\hat{\beta}_o)\ \Psi^{-1}\ [R-w(\hat{\beta}_o)\ ])^T$$

$$+ (B^{-1}T^T(\hat{\beta}_o)\ \Psi^{-1}\ [R-w(\hat{\beta}_o)])\ (B^{-1}T^T(\hat{\beta}_o)\ \Psi^{-1}\ [\ R-w(\hat{\beta}_o)\ ])^T - \hat{\beta}_o\beta^T$$

$$- B^{-1}T^T(\hat{\beta}_o)\ \Psi^{-1}\ [\ R-w(\hat{\beta}_o)\ ]\ \beta^T - \beta\hat{\beta}_o^T - \beta(B^{-1}T^T(\hat{\beta}_o)\ \Psi^{-1}\ [\ R-w(\hat{\beta}_o)\ ])^T$$

$$\left. + \beta\beta^T \right\} . \tag{39}$$

Now consider the relationship between the observed, the actual, and noise vectors:

$$\underset{\text{Observed}}{W} = \underset{\text{True Value}}{w(\beta)} + \underset{\text{Noise}}{x} .$$

Substituting this into equation (39), we have

$$\begin{aligned}\Phi = E\Big\{ & \hat{\beta}_o\hat{\beta}_o^T + B^{-1}T^T(\hat{\beta}_o)\,\Psi^{-1}\left[w(\beta)-w(\hat{\beta}_o) + x\right]\hat{\beta}_o^T \\ & + \hat{\beta}_o\left(B^{-1}T^T(\beta_o)\,\Psi^{-1}\left[w(\beta)-w(\hat{\beta}_o) + x\right]\right)^T \\ & + \left(B^{-1}T^T(\hat{\beta}_o)\,\Psi^{-1}\left[w(\beta)-w(\hat{\beta}_o)+x\right]\right)\left(B^{-1}T^T(\hat{\beta}_o)\,\Psi^{-1}\right. \\ & \qquad \left.\cdot\left[w(\beta)-w(\hat{\beta}_o) + x\right]\right)^T \\ & - \hat{\beta}_o\beta^T - B^{-1}T^T(\hat{\beta}_o)\,\Psi^{-1}\left[w(\beta)-w(\hat{\beta}_o) + x\right]\beta^T - \beta\hat{\beta}_o^T \\ & - \beta\left(B^{-1}T^T(\hat{\beta}_o)\,\Psi^{-1}\left[w(\beta)-w(\hat{\beta}_o) + x\right]\right)^T + \beta\beta^T\Big\} . \end{aligned} \tag{40}$$

The substitution $Q = B^{-1}\,T^T(\beta_o)\,\Psi^{-1}$ gives the expression

$$\begin{aligned}\Phi = E\Big\{ & \hat{\beta}_o\hat{\beta}_o^T + Q\left[w(\beta)-w(\beta_o)\right]\hat{\beta}_o^T + Qx\hat{\beta}_o^T + \hat{\beta}_o\left(Q\left[w(\beta)-w(\hat{\beta}_o)\right] + Qx\right)^T \\ & + \left(Q\left[w(\beta)-w(\hat{\beta}_o) + x\right]\right)\left(Q\left[w(\beta)-w(\hat{\beta}_o) + x\right]\right)^T - \hat{\beta}_o\hat{\beta}_o^T \\ & \qquad - Q\left[w(\beta)-w(\hat{\beta}_o)\right]\beta^T \\ & - Qx\beta^T - \hat{\beta}_o^T - \beta\left(Q\left[w(\beta)-w(\hat{\beta}_o)\right] + Qx\right)^T + \beta\beta^T\Big\} . \end{aligned} \tag{41}$$

Expanding equation (41), we have

$$\Phi = E\Big\{ \hat{\beta}_o\hat{\beta}_o^T + Q\left[w(\beta)-w(\hat{\beta}_o)\right]\hat{\beta}_o^T + Qx\hat{\beta}_o^T + \hat{\beta}_o\left[w(\beta)-w(\hat{\beta}_o)\right]^T Q^T$$

$$+ \beta_o x^T Q^T + Q\left[w(\beta)-w(\hat{\beta}_o)\right]\left[w(\beta)-w(\hat{\beta}_o)\right]^T Q^T + Qx\left[w(\beta)-w(\hat{\beta}_o)\right]^T Q^T$$

$$+ Q\left[w(\beta)-w(\hat{\beta}_o)\right] x^T Q^T + Qxx^T Q^T - \hat{\beta}_o\beta^T - Q\left[w(\beta)-w(\hat{\beta}_o)\right]\beta^T$$

$$- Qx\beta^T - \beta\hat{\beta}_o^T - \beta\left[w(\beta)-w(\hat{\beta}_o)\right]^T Q^T - \beta x^T Q^T + \beta\beta^T \Big\} . \qquad (42)$$

Now if we assume there are small deviations between β_o and β i.e. $\hat{\beta}_o \simeq \beta$ and $w(\beta) \simeq w(\hat{\beta}_o)$, then most of the terms in equation (42) cancel giving

$$\Phi = Q\ E\left\{xx^T\right\} Q^T . \qquad (43)$$

We assume that the covariance, $E\left\{xx^T\right\}$, for the noise random variable x is the weighting matrix Ψ. Therefore

$$\Phi = Q\ \Psi\ Q^T .$$

If one is able to choose the weighting matrix Ψ such that Ψ equals the covariance matrix for the error random variables then this is advantageous in that for any matrix Ψ'

$$\Phi(\Psi) \leq \Phi(\Psi')$$

where the inequality relationship means that

$$\Phi(\Psi') - \Phi(\Psi)$$

is a non-negative definite matrix.

Simplifying equation (43) gives

$$\Phi = Q\ \Psi\ Q^T = B^{-1}T^T(\hat{\beta}_o)\ \Psi^{-1}\ \Psi\Psi^{-1^T}\ T(\hat{\beta}_o)B^{-1^T}$$

$$= B^{-1}\ T^T(\hat{\beta}_o)\ \Psi^{-1}\ T(\hat{\beta}_o)B^{-1^T}$$

$$= B^{-1}\ B\ B^{-1^T}$$

$$= B^{-1} . \qquad (44)$$

In order that the relationships

$$\hat{\beta}_o \approx \beta$$

$$W(\beta) \approx w(\hat{\beta}_o)$$

are satisfied, the matrix B is evaluated at the final iteration from equation (29). For the kidney model the elements σ_i^j of the matrix ψ given by equation (28) are equal to the measured data W_i^j, assuming that the measured data is Poisson distributed.

Figure 5 is a plot of the absolute ratio of signal to the variance versus total counting rate for the model parameters α_1 and τ_2. The plots are linear functions for all the parameters as is illustrated in Table 1 with a and b being the least-squares fit for the slope and intercept respectively. The data for the table were generated at every 1000 total counts per 15 seconds between 2000 and 10000 using Gausian noise with a standard deviation equal to the square root of the counts. The total counting rate represents the sum of the initial counting rates for the blood pool, extravascular pool, and tubular cells. The parameters τ_1, τ_2, and α_1 have the largest slope and thus have the greatest increase in their signal to variance as the total counting rate increases. The parameters u_1, u_2, u_3, u_4 are least influenced by counting statistics and appear to be flat between the counting rates of 2000 and 10000.

In view of the data presented in Table 1, it appears that the following theorem and corollary might be true.

Theorem: For the kidney model the covariance matrix Φ decreases monotonically as the total counts increase. The matrix Φ decreases in the sense that

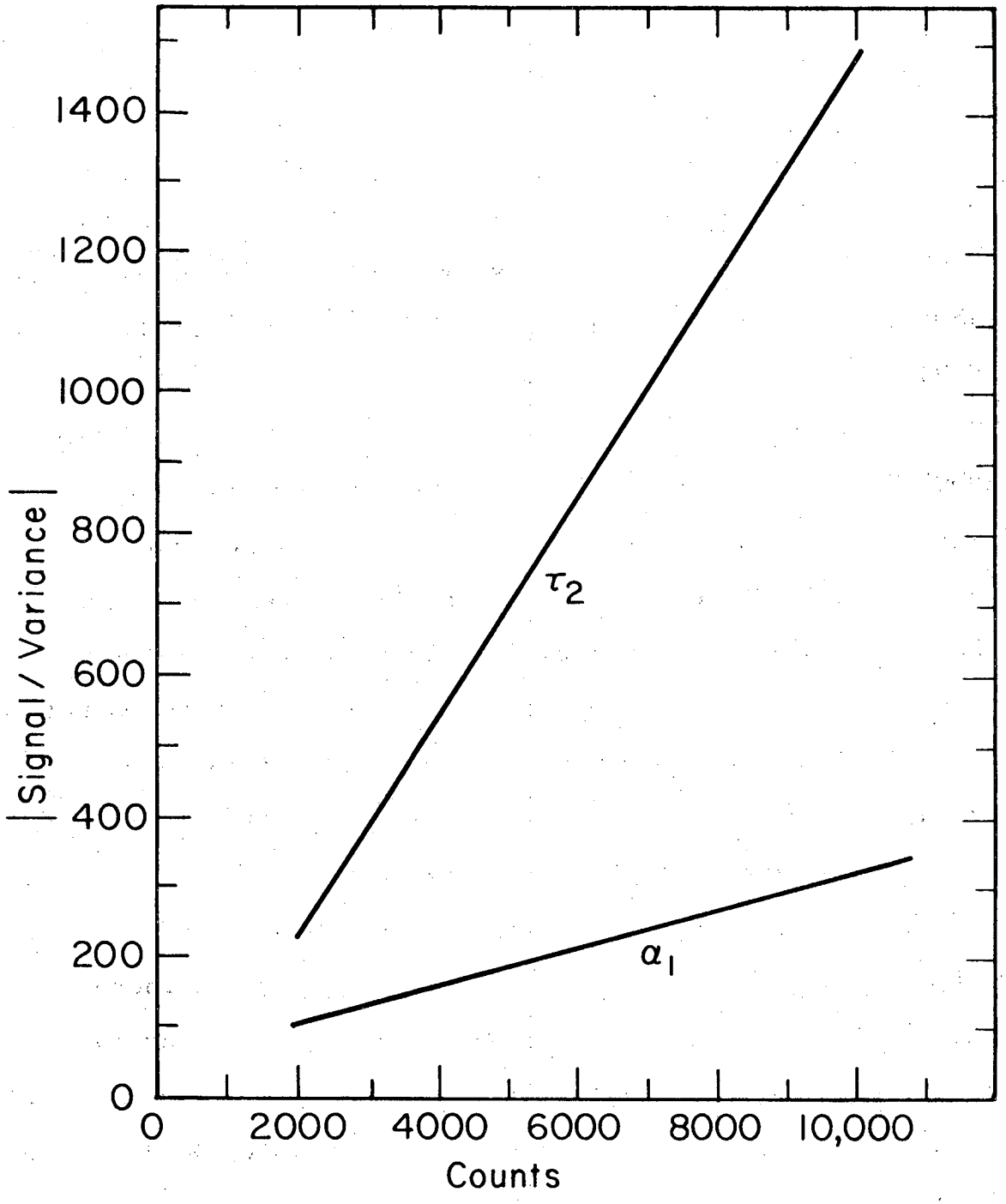

XBL766-9034

Figure 5. Graph of the absolute ratio of the signal to the variance as a function of counting rate for the model parameters α_1 (rate constant from extravascular pool to blood pool) and τ_2 (left kidney estuary delay time).

$$\Phi_2(C_2) \leq \Phi_1(C_1)$$

if $\Phi_1(C_1) - \Phi_2(C_2)$ is a non-negative definite matrix and $C_2 \geq C_1$ (C_i = Total Count Rate).

Corollary: The variances for each of the parameters decrease monotonically as the total counts increase.

These results are not proved nor is it known if sufficient conditions are given for such results to be true. However, in light of the data presented, these results seem plausible.

To illustrate what the graph and table show, let's assume that

$$\sigma_j^i = f_j^i c$$

where c is the total counting rate and f_j^i is the fraction of the total counting rate measured for the data sample W_j^i, giving the expressions

$$W_j^i = f_j^i c$$

$$W_j^i = g_j^i(\beta) c$$

$$\sum_{i,j} f_j^i = 1$$

where we assume that the functions $g_j^i(\beta)$ are independent of the counting rate. The expression for $b_{\ell p}$ at the point β_o in equation (31) can be rewritten as

$$b_{\ell p} = \sum_{j=1}^{N} \sum_{i=1}^{4} c \frac{\partial g_j^i(\beta_o)}{\partial \beta_\ell} \cdot \frac{1}{f_j^i \phi} \frac{\phi \partial g_j^i(\beta_o)}{\partial \beta_p}$$

$$= c \sum_{j=1}^{k} \sum_{i=1}^{m} \frac{1}{f_j^i} \frac{\partial g_j^i(\beta_o)}{\partial \beta_\ell} \frac{\partial q_j^i(\beta_o)}{\partial \beta_p} .$$

| Signal / Variance |

Parameter	Counts/15 secs 2000	3000	4000	5000	6000	7000	8000	9000	10000	Linear Coefficients a	b
α_1	112	138	163	188	213	240	267	296	326	.0265	56.89
α_2	1150	1520	1870	2210	2550	2890	3230	3590	3950	.3468	470.11
α_3	7.15	10.6	13.8	16.7	19.5	22.2	24.7	27.2	29.7	.0028	2.33
α_4	31.0	35.0	37.2	38.6	39.4	39.9	40.2	40.4	40.5	.0010	31.87
α_5	4.00	5.12	5.98	6.69	7.32	7.89	8.42	8.93	9.42	.0007	3.17
α_6	1.96	3.76	5.70	7.67	9.64	11.6	13.5	15.5	17.4	.0019	-2.01
α_7	.488	.520	.366	.100	.229	.592	.971	1.36	1.75		
α_8	.713	1.43	2.21	3.02	3.83	4.64	5.44	6.25	7.05	.0008	- .95
u_1	.142	.135	.130	.127	.125	.124	.123	.122	.122		
u_2	.226	.221	.217	.215	.213	.213	.212	.213	.213		
u_3	.522	.526	.528	.528	.529	.531	.533	.535	.537		
u_4	1.04	1.02	1.01	1.00	.994	.992	.990	.990	.99		
τ_1	233	350	466	581	693	803	911	1020	1120	.1112	19.33
τ_2	242	390	544	700	858	1020	1180	1340	1490	.1572	-80.73

| Signal / Variance | = a · counts / 15 secs + b

Table 1. The absolute ratio of the signal to variance as a function of the counting rate for the parameters of the kidney compartment model is linear for these data with slope a and intercept b.

If we express $b_{\ell p}$ as $b_{\ell p} = c\, b'_{\ell p}$ and $b^{-1}_{\ell p} = \frac{1}{c}\, b'^{-1}_{\ell p}$, then from equation (44) the variance of the parameter $\hat{\beta}_i$ is

$$\mathrm{var}(\hat{\beta}_i) = b^{-1}_{ii}$$

$$= \frac{1}{c}\, b'^{-1}_{ii} \quad .$$

Therefore the ratio of the signal to the variance is

$$\left| \frac{\hat{\beta}_i}{\mathrm{var}(\hat{\beta}_i)} \right| = c \left| \frac{\hat{\beta}_i}{b'^{-1}_{ii}} \right| \quad ,$$

and thus goes linearly as a function of the counts.

Table 2 gives the normalized covariance matrix for simulated data with a total count rate of 10000 counts per 15 seconds. Gaussian noise with a standard derivation equal to the square root of the counts was added to the data. Since the covariance matrix is symmetrical only the lower triangular portion of the matrix is shown. The covariance matrix indicates a parallel relationship between the left and right kidneys for parameters which have a high correlation. For example, the flow rate constant α_3 for the blood to the tubular cells and the glomerular filtration rate constant α_4 for the right kidney have a covariance $\mathrm{cov}(\hat{\alpha}_3, \hat{\alpha}_4) = -.991$ and the corresponding parameters for the left kidney α_6 and α_7 have a covariance $\mathrm{cov}(\hat{\alpha}_6, \hat{\alpha}_7) = -.997$. The parameters with the high degree of correlation are indicated in Figure 6.

Normalized Covariance Matrix for Total Counts of 10000 per 15 Sec

$$\mathrm{Cov}(\hat{\beta}_i, \hat{\beta}_j) = E[(\hat{\beta}_i - \beta_i)(\hat{\beta}_j - \beta_j)]$$

1.000													
.946	1.000												
-.682	-.722	1.000											
.661	.683	-.991	1.000										
-.707	-.723	.979	-.972	1.000									
-.677	-.789	.522	-.472	.543	1.000								
.663	.767	-.497	.452	-.526	-.997	1.000							
-.725	-.803	.558	-.522	.588	.984	-.986	1.000						
.718	.623	-.390	.356	-.370	-.186	.145	-.197	1.000					
-.721	-.653	.391	-.336	.366	.243	-.193	.242	-.965	1.000				
-.290	-.200	.437	-.505	.376	-.190	.210	-.128	-.524	.374	1.000			
-.193	-.079	-.152	.136	-.087	.017	-.060	.030	-.321	.128	.133	1.000		
-.046	.009	.148	-.185	.248	-.132	.138	-.089	-.074	.053	.207	-.050	1.000	
-.268	-.126	.039	-.061	.074	-.048	.037	.085	-.309	.263	.224	.203	.055	1.000

α_1 - Blood Pool to Extra vascular
α_2 - Extra vascular to Blood Pool
α_3 - Blood Pool to Tubular Cells (right kidney)
α_4 - Glomerular Filtration Rate (right kidney)
α_5 - Tubular Cell Flow Rate (right kidney)
α_6 - Blood Pool to Tubular Cells (left kidney)
α_7 - Glomerular Filtration Rate (left kidney)
α_8 - Tubular Cell Flow Rate (left kidney)
u_1 - Blood Pool at T_o
u_2 - Extravascular Pool at T_o
u_3 - Right Kidney Tubular Cells at T_o
u_4 - Left Kidney Tubular Cells at T_o
τ_1 - Estuary Delay Time (Right Kidney)
τ_2 - Estuary Delay Time (left Kidney)

Table 2. The normalized covariance matrix for the kidney compartment parameters for a simulated data sample of 10000 counts per 15 sec with additive Gaussian noise.

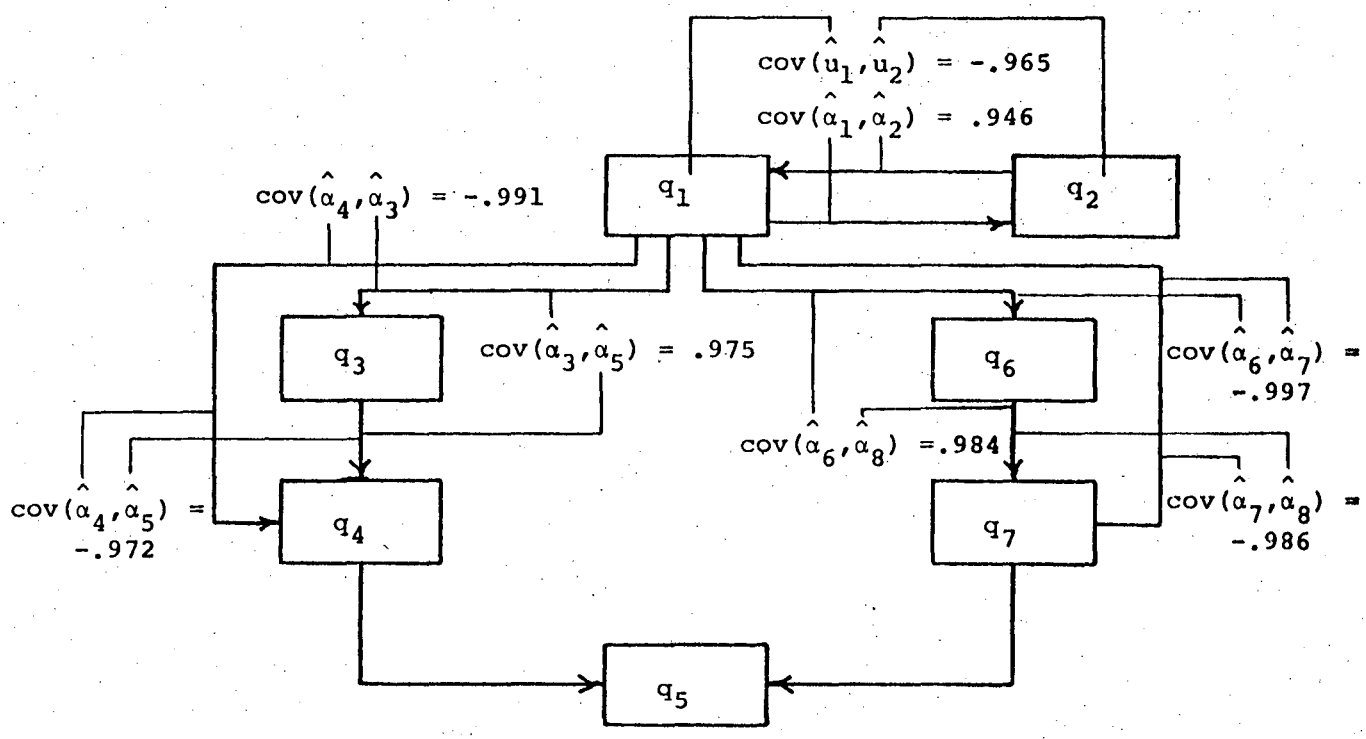

Figure 6. The kidney compartment parameters which have a high degree of correlation.

T. Lindmo, A. Skratting, and K. F. Nakken [11] suggest that a model which does not have a pathway for glomerular filtration represented here by the rate constants α_4 and α_6 is a better compromise between a physiologically representative model and one that can successfully be fitted to the data. Such a model would eliminate some of the high correlations.

8.0 RESULTS

The results of six animal studies are given in Figures 7-14. The data are fitted to models both with and without glomerular filtration and with different cross-talk matrices representing the relationship between the data collected as time functions and the blood, extravascular, kidneys and bladder compartments. The data are selected by drawing areas of interest as illustrated in Figure 3, therefore each time function represents data from more than one compartment. It is desirable to select a cross-talk matrix which best fits the data and yet is not so complicated that highly correlated parameters will introduce errors in the algorithm giving erroneous results.

The results presented in Figures 7-14 represent data that were fitted to cross-talk matrices giving one of the following system of equations for the two kidney model. The identifications TF21, TF24, TF27, and TF11 refer to the corresponding subroutines used to evaluate these time functions and are described in Appendix A.

TF21 -

$$T1 = \gamma_1 (Q3 + Q4) + \gamma_2 Q1 + \gamma_3 Q2 + \gamma_4 Q5$$

$$T2 = \gamma_5 (Q6 + Q7) + \gamma_6 Q1 + \gamma_7 Q2 + \gamma_8 Q5$$

$$T3 = \gamma_{10} Q1 + \gamma_{11} Q2 + \gamma_9 Q5$$

$$T4 = \gamma_{12} Q1 + \gamma_{13} Q2 + \gamma_{14} Q5 + \gamma_{15} (Q3 + Q4) + \gamma_{16} (Q6 + Q7)$$

TF24 -

$$T1 = \gamma_1 Q3 + \gamma_2 Q4 + \gamma_3 Q1 + \gamma_4 Q2 + \gamma_5 Q5$$

$$T2 \quad \gamma_1 Q6 + \gamma_2 Q7 + \gamma_6 Q1 + \gamma_7 Q2 + \gamma_8 Q5$$

$$T3 = \gamma_{10} Q1 + \gamma_{11} Q2 + \gamma_9 Q5$$

$$T4 = \gamma_{12} Q1 + \gamma_{13} Q2 + \gamma_{14} Q5 + \gamma_{15} (Q3 + Q4) + \gamma_{16} (Q6 + Q7)$$

TF27 -

$$T1 + Q3 + Q4 + \gamma_1(Q1 + Q2)$$
$$T2 = Q6 + Q7 + \gamma_2(Q1 + Q2)$$
$$T3 = Q5 + \gamma_3(Q1 + Q2)$$
$$T4 = \gamma_4(Q1 + Q2)$$

The time functions are represented by T1 for the right kidney, T2 for the left kidney, T3 for the bladder, and T4 for the blood and tissue. For the one kidney model the data were fitted to a model with the cross-talk matrix giving the system of equations

TF11

$$T1 = Q3 + Q4 + \gamma_1(Q1 + Q2)$$
$$T2 = Q5 + \gamma_2(Q1 + Q2)$$
$$T3 = \gamma_3(Q1 + Q2)$$

where the time functions are represented by T1 for the kidney, T2 for the bladder and T3 for the blood and tissue. The matrix of coefficients γ_i is shown in Figures 7-14 as W.

Figure 7 shows the estimated one kidney model parameters for data collected from a mouse. A time interval of 10 seconds was used instead of the 15 seconds used in the dog studies. The parameter results indicate a very rapid uptake and washout of iodohippurate with a short delay time in the kidney estuary. These parameters were easier to evaluate than the parameters for the two kidney model since there are fewer variables and fewer highly correlated parameters.

Figure 8 illustrates the model parameters fitted to data collected from a rat. The chi-square equals 695 for a sample size

of 135. The data were collected in 10 second intervals based on the assumption that the uptake and washout would be similar to that of the mouse. However, the uptake and washout were much slower for this particular sample and the estuary delay times of 5.40 and 3.58 minutes were surprisingly long. Using SUBROUTINE TF27, the linear coefficient γ_2 representing the amount of blood and extravascular compartment included in the time function for the left kidney were negative. The model fitted to these data did not allow for glomerular filtration since trials with such a model gave negative values for the glomerular filtration rate coefficient.

A dehydrated dog study was done using a model with glomerular filtration and SUBROUTINE TF27 was used to evaluate the time functions. The fitted data for the parameters given in Figure 9 has a chi-square equal to 8029 for a sample size of 120. The average delay times of 3.42 and 2.72 minutes did not seem indicative of a dehydrated dog since other studies with hydrated dogs gave similar results. However, these values can change from animal to animal and could also be influenced by the effects of anesthesia.

Figure 10 compares the results of a dog study where the data were fitted to a model both with and without glomerular filtration giving chi-squares which are nearly equal. The time functions were evaluated using SUBROUTINE TF24. A model without glomerular filtration was selected after the model with glomerular filtration gave a negative rate coefficient. A negative coefficient implies reabsorption of iodohippurate which is contrary to the accepted concept of hippurate excretion. However, free iodine could be reabsorbed. Without glomerular filtration, the new blood extraction rate coefficients are not a simple addition of the previous rate coefficients for glomerular filtration and tubular cell uptake.

Figure 11 gives a comparison of three studies done on the same dog but at different times. Using SUBROUTINE TF27, the estimated parameters gave fitted curves which had large chi-squares. These same sets of data were then applied to other models with time functions which allowed for more cross coupling between the compartments which are illustrated in Figures 12, 13, and 14. SUBROUTINE TF24 gave a better fit to the data collected for the first and third studies, whereas SUBROUTINE TF21 gave a better fit for the second study. The results for the third study (Figure 14) gave a high positive value for $\gamma_{15} = 2.28$, and a large negative value for $\gamma_{16} = -1.10$. Studies indicate that these two parameters are highly correlated with the ratio of the signal to the variance equal to 114 for γ_{15} and equal to .0334 for γ_{16}.

Using the SUBROUTINE TF27, the fitted data gave high chi-squares indicating that the model did not allow for enough degrees of freedom. However, a model with more parameters has higher parameter correlations which result sometimes in the covariance matrix B^{-1}, equation (44), being singular. At each iteration, the Marquardt algorithm inverts the matrix $(B + \lambda I)$ in determining the step size for the new solution. Therefore the algorithm has the nice property that even if the parameters are highly correlated and B is singular, a least squares solution can still be found, since adding a constant to the diagonal elements insures that $(B + \lambda I)$ remains positive definite.

The estuary delay times are well determined as indicated by the high ratio of the signal to the variance (Table 1) whereas other parameters can vary from one model to another for the same

data sample as shown in Figure 14. The initial conditions are poorly estimated as denoted by the negative estimates for some of the parameters and the low ratio of the signal to the variance given in Table 1.

With the small sample size, it is difficult to evaluate the relative differences in the kidney function for the dog, rat, and mouse. However, the mouse had by far the fastest uptake and excretion as indicated by the short estuary delay time whereas the rat had a long estuary delay time. The tubular transit times for the dog studies were similar to human tubular transit times which range from one to five minutes as given by DeGrazia and co-workers [1].

The glomerular filtration rate is difficult to evaluate since in many of the studies negative values were obtained. Pitts [12] indicates that the filtration fraction of normal man for the glomerulus varies from 16 to 20% and that of dog from 20 to 30%. Our results showed for iodohippurate that the glomerular filtration ranged between 6 and 50%. The glomerular filtration for the mouse represented 50% of iodohippurate extraction from the blood. These results are similar to that which T. Lindmo and co-workers [11] obtained, indicating that the glomerular filtration results gave higher glomerular extraction percentages than actually should be experienced physically.

We did not measure the amount of free iodine in the commercial preparations of ^{131}I and ^{123}I-hippurate. Blaufox and co-workers [14] indicated that they had one shipment of iodohippurate which had a maximum of 4% free iodine whereas most shipments averaged 2% or less. Unrealistic rate coefficients for glomerular filtration and tubular cell excretion may also be the result of the assumption

that each molecule of iodohippurate will experience the same tubular transit time, whereas a more appropriate model would assume a distribution of delay times. The model may not properly represent blood and extravascular pools. In vitro studies with red cells indicated that the hippurate reaches equilibrium very rapidly representing 17% of the hippurate mass in the red cell [14]. The in vivo studies indicated that after 5-10 minutes the erythrocytic ^{131}I accounted for about 15% of the whole-blood radioactivity. The rate of uptake of iodohippurate may vary between red cells and tissue cells, therefore one compartment may not properly model the extravascular pool.

A major problem in determining renal function is that the time functions generated for the various areas of interest represent that organ or compartment plus unknown contributions from other compartments, as well as errors due to attenuation and scattering of photons. Scatter from the bladder significantly affects data sampled from the kidney region of interest. Britton and Brown [15] injected ^{131}I-labelled Human Serum Albumin to eliminate the background pools from the renal curves by using the technique of Computer Assisted Blood Background Subtraction. Since serum albumin is not incorporated into tissue, the problem still remains of measuring extravascular pools. Farmelant and co-workers [16] used an area of the upper chest whereas Holroyd and co-workers [17] used a region near the kidneys as a measure of blood and tissue. The problem of selecting other areas of interest is whether or not these areas are truly representative of blood and tissue that are overlapping the kidneys.

The multiparameter kidney compartment model incorporates both the cross-coupling between compartments and renal function and gives

good estimates of tubular transit times. The model does not require plasma and urine samples which Blaufox and co-workers [18] used to determine the exponential components in the time function for the blood pool. However, the computer program evaluates the parameters automatically and does not require a posteriori information to determine the portion of the blood curves which are dominated by these exponential components.

```
MOUSE TAG 5
APRIL 1, 1976

                                                   .....................          .0607          .....................
                                                   .                   .   <******************.                   .
                                                   .                   .                      .                   .
          THE BLOOD POOL HAS INITIALLY             .       Q1          .                      .       Q2          .
               2778.91 COUNTS/10 SEC               .   BLOOD POOL      .                      .  EXTRA VASCULAR POOL .
                                                   .                   .******************>.                   .
                                                   .                   .        .4498         .                   .
                                                   .....................                      .....................
                                                       *   *                  THE EXTRA VASCULAR POOL HAS INITIALLY
                                                       *   *                        1899.34 COUNTS/10 SEC
                                                       *   *
                                                       *   *
                          .2304                        *   *
*****************************************************      *
*                                                          *
*                                                          *
*                                                          *
*             KIDNEY                    .2917              *
*               ****************************************
*               *
*               * THE KIDNEY TUBULAR CELLS
*               *     HAVE INITIALLY    904.29 COUNTS/10   SEC
*               *
*               V                THE TIMEFUNCTIONS AND COMPARTMENTS ARE  RELATED AS FOLLOWS
*     .......................
*     .                     .
*     .                     .          (T1,T2,T3)    =   (Q1,Q2,Q3,Q4,Q 5)W
*     .       Q3            .
*     .   TUBULAR CELLS     .
*     .                     .      WHERE
*     .                     .
*     .......................
*               *                                  .1264     .0484     1.4698          ************************
*               *                                  .1264     .0484     1.4698          *                      *
*               *   .4232                   W =   1.0000    0.0000    0.0000          *   KIDNEY REMOVED     *
*               *                                  1.0000    0.0000    0.0000          *                      *
*               V                                  0.0000    1.0000    0.0000          ************************
*     .......................
*     .                     .
*     .                     .
*     .       Q4            .  TIME DELAY =
****>.   KIDNEY ESTUARY     .   .8505
*     .                     .
*     .                     .
*     .......................
*               *
*               *
*               *
*               *
*               *
*               *                                  .......................
*               *                                  .                     .
*               *                                  .                     .
*               *                                  .       Q5            .
*               ****************************>      .    BLADDER          .
*                                                  .                     .
*                                                  .                     .
*                                                  .......................
```

Figure 7. The kidney compartment parameters evaluated for data collected from a mouse. The fitted chi-square for the sample of 89 time points equals 754.

RAT
AUG. 12, 1974

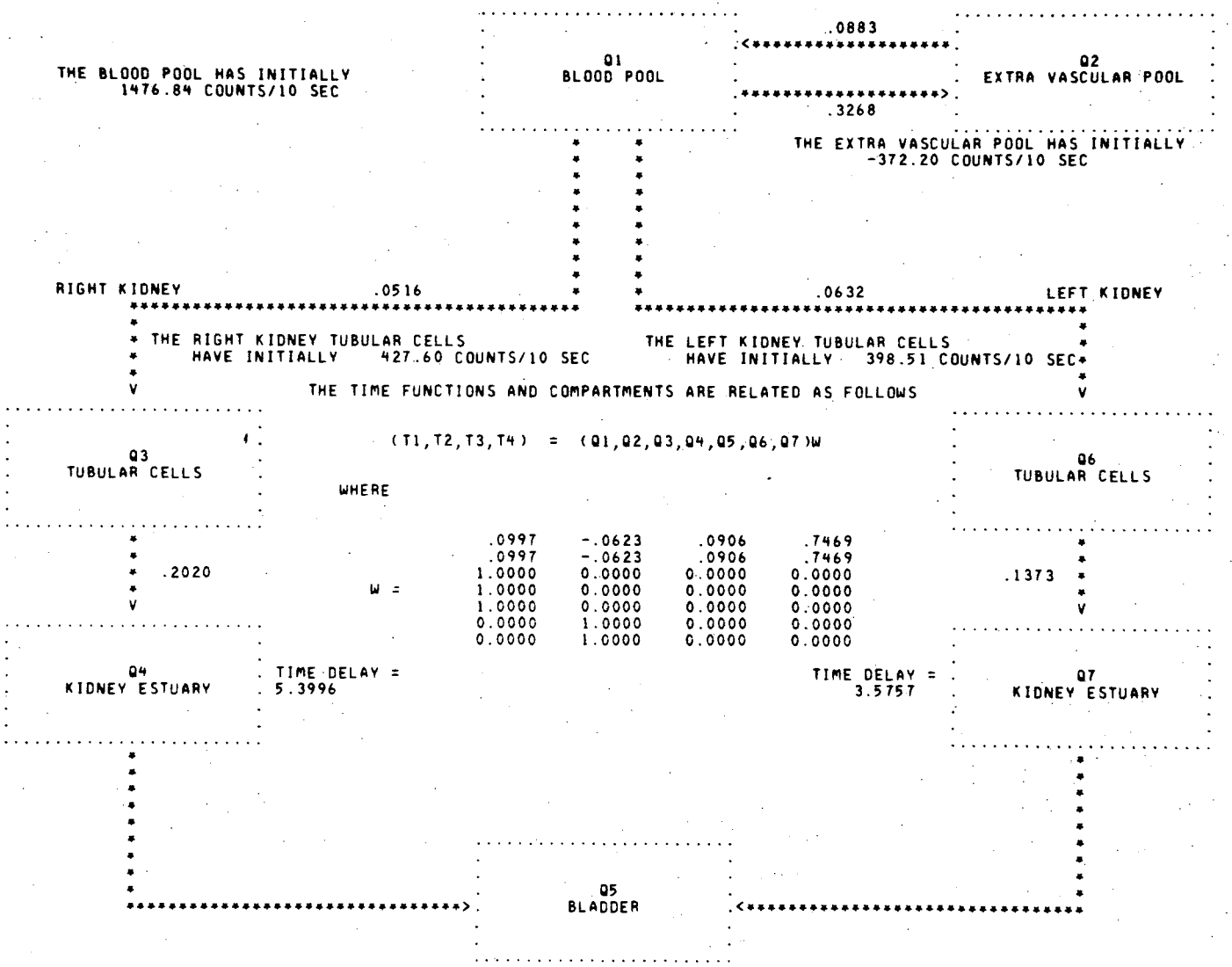

Figure 8. The kidney compartment parameters evaluated for data collected from a rat and fitted to a kidney model without glomerular filtration. The fitted chi-square for the sample of 135 time points equals 695.

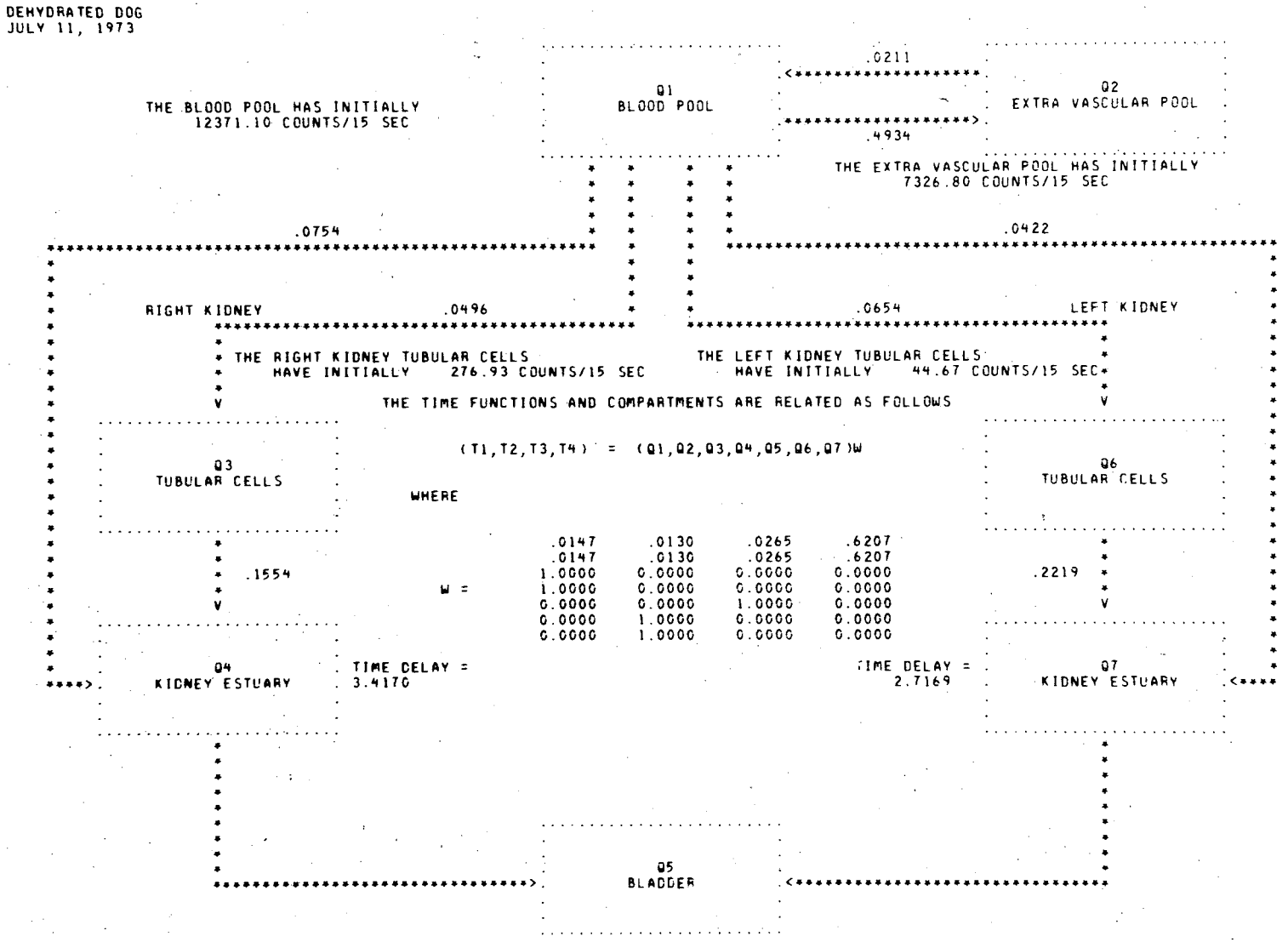

Figure 9. The kidney compartment parameters evaluated for data collected from a dehydrated dog and fitted to a kidney model with glomerular filtration. The fitted chi-square for the sample of 120 time points equals 8029.

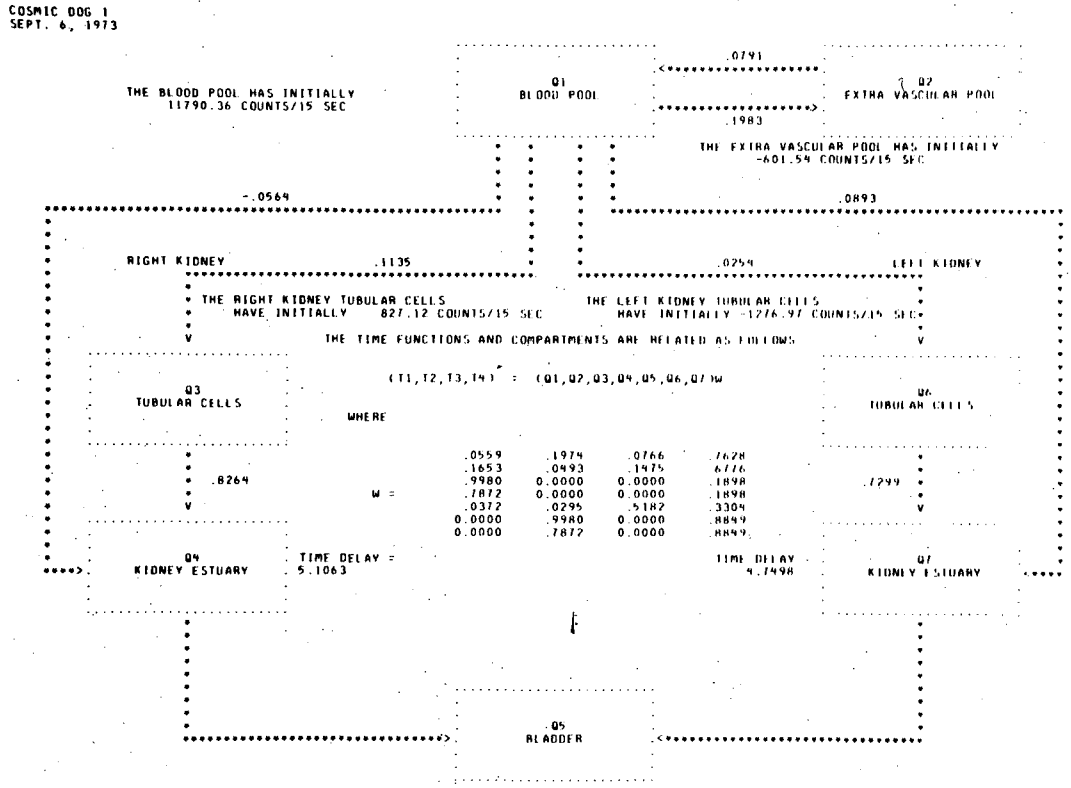

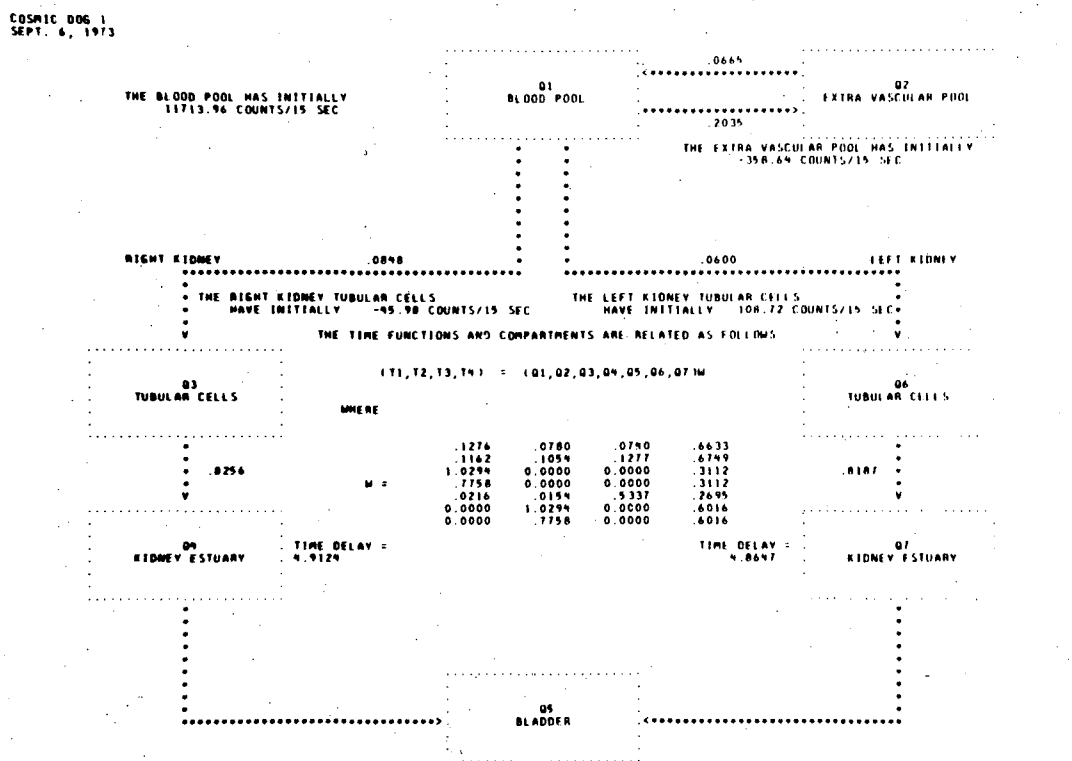

Figure 10. A comparison between a kidney model with glomerular filtration in the upper figure and a kidney model without glomerular filtration in the lower figure for data collected from a dog. The fitted chi-squares for the sample of 99 time points equal 448 and 455 for the upper and lower models respectively.

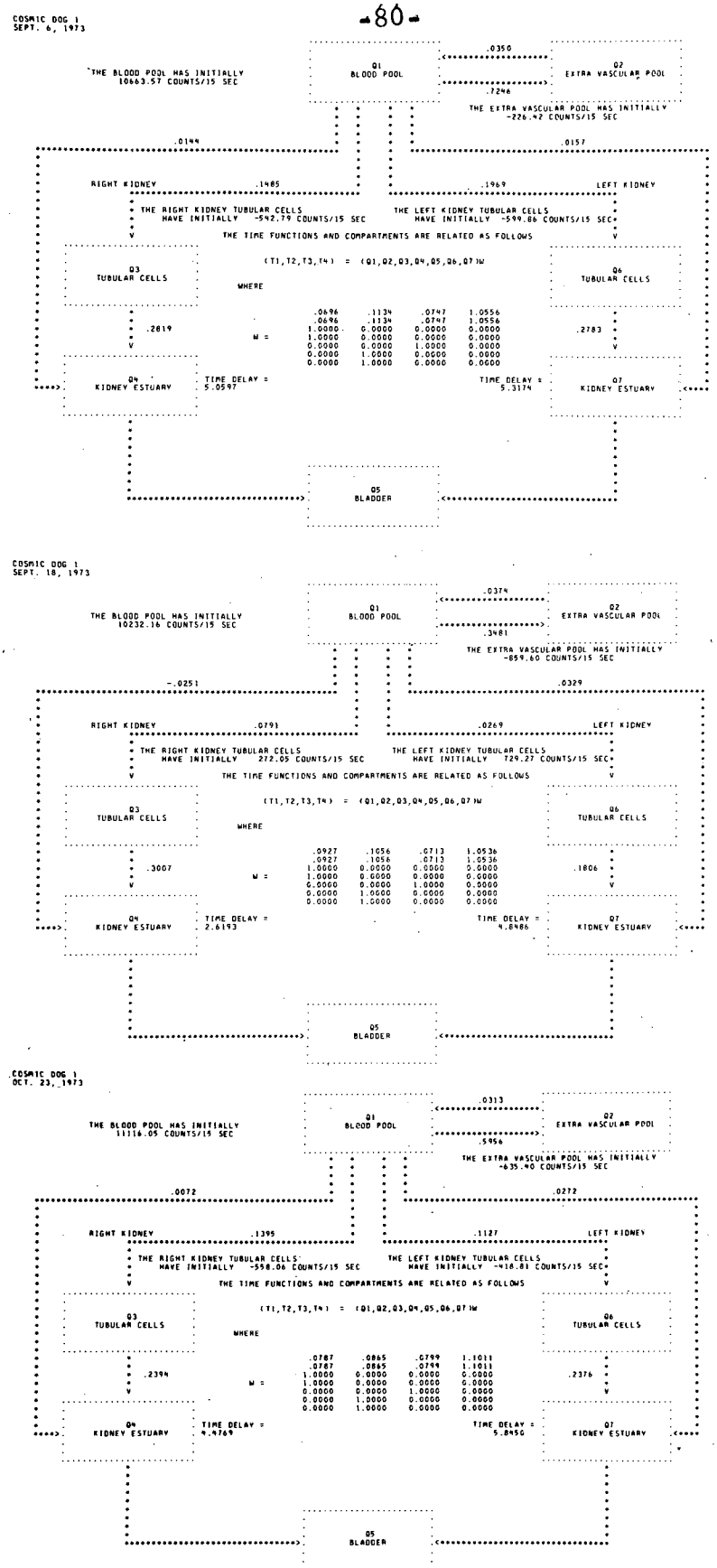

Figure 11. Kidney model parameters evaluated for the same dog on three separate studies. The chi-squares equal 3927, 1665, and 9725 with sample sizes equaled to 99, 97, and 118 for the first, second, and third studies respectively.

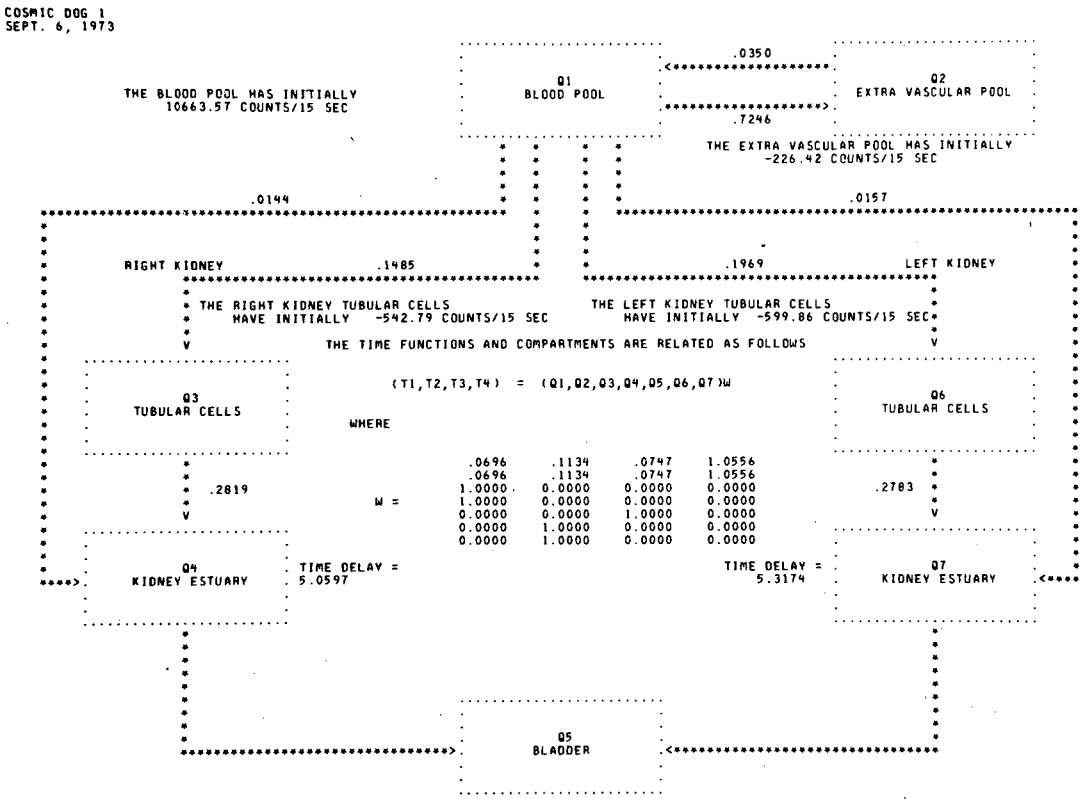

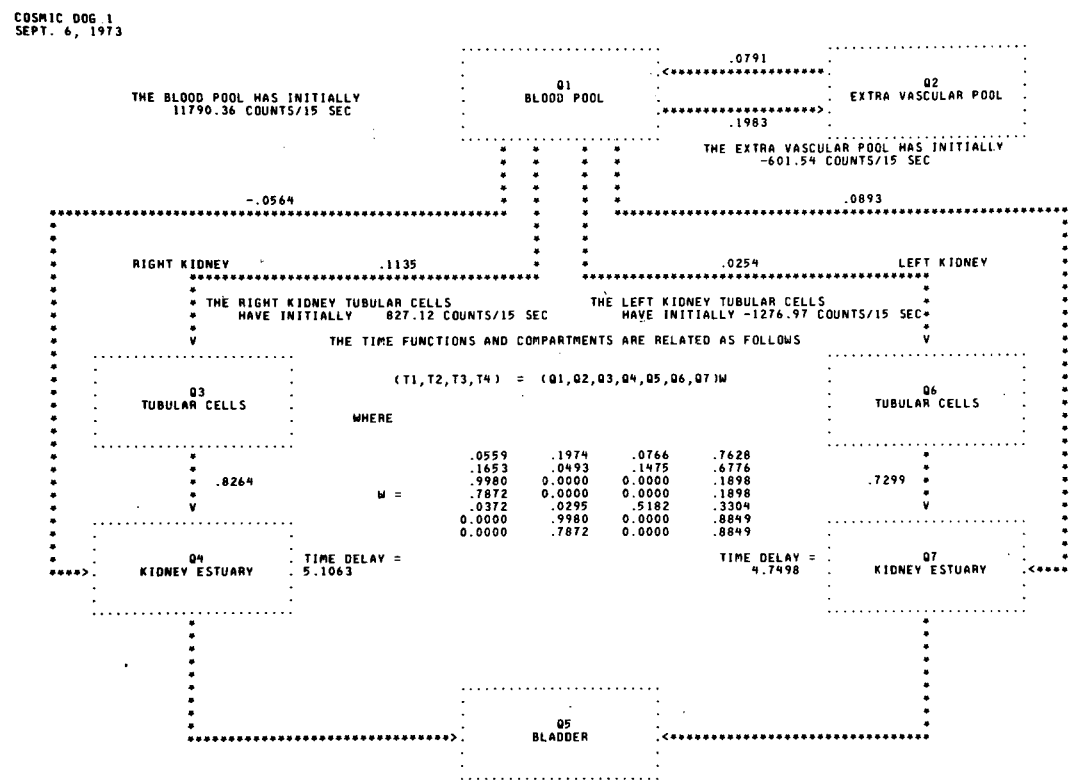

Figure 12. A comparison between a kidney model where the time functions are evaluated using SUBROUTINE TF27 in the upper figure and SUBROUTINE TF24 in the lower figure. The fitted chi-squares for the sample of 99 time points equal 3927 and 448 for the upper and lower models respectively.

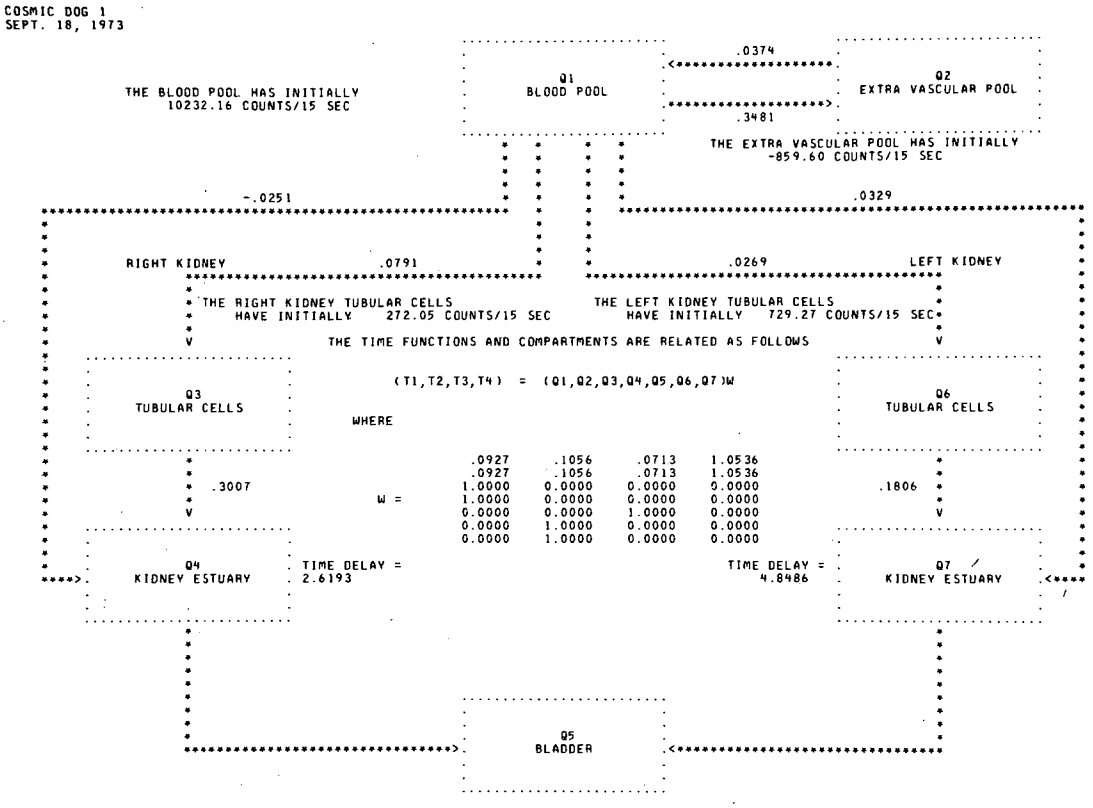

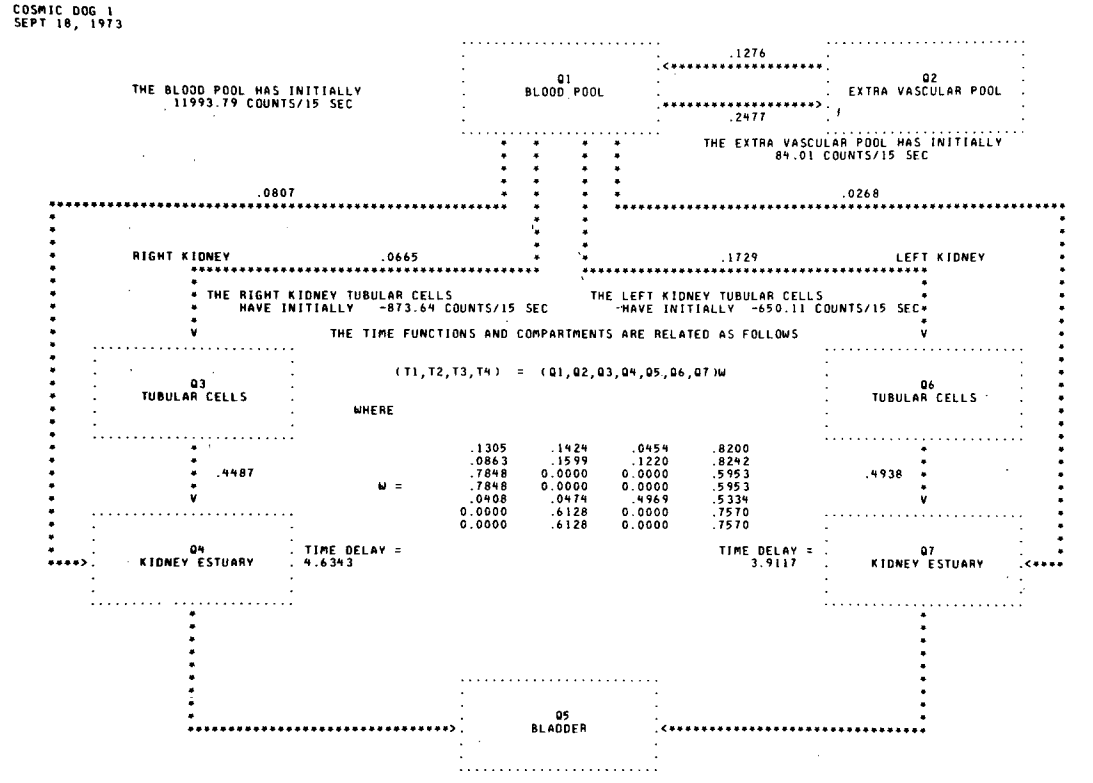

Figure 13. A comparison between a kidney model where the time functions are evaluated using SUBROUTINE TF27 in the upper figure and SUBROUTINE TF21 in the lower figure. The fitted chi-squares for the sample of 97 time points equal 1665 and 450 for the upper and lower models respectively.

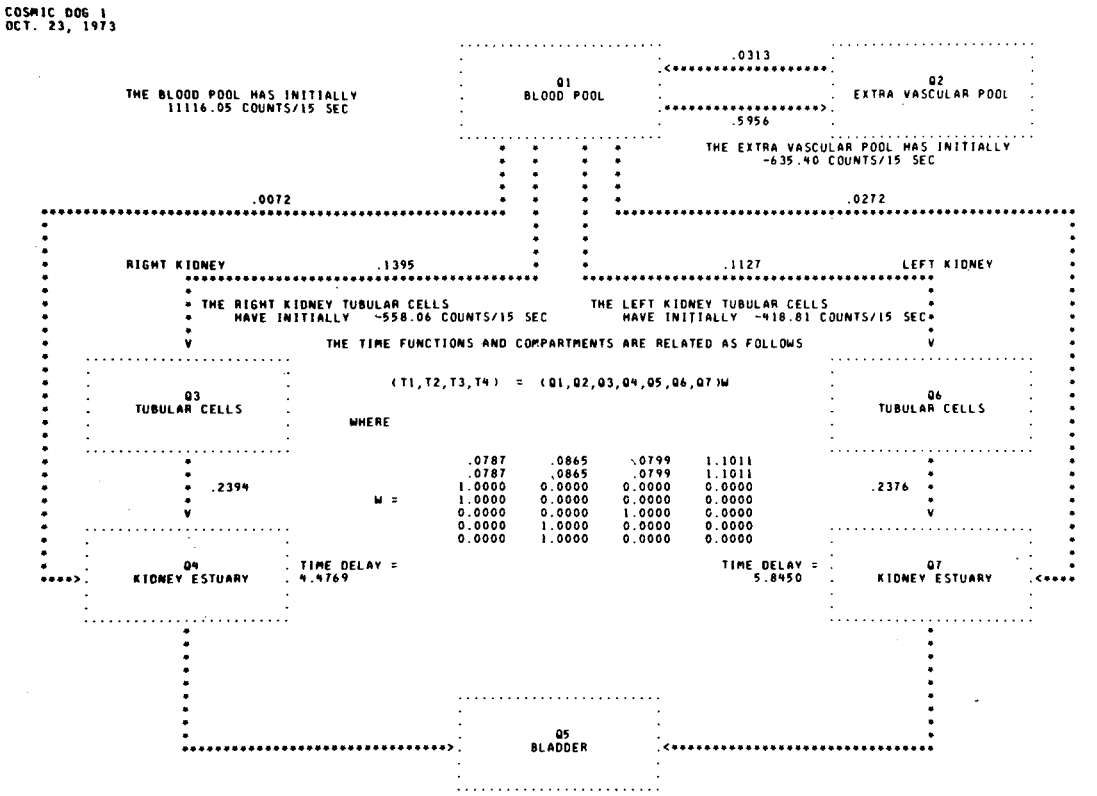

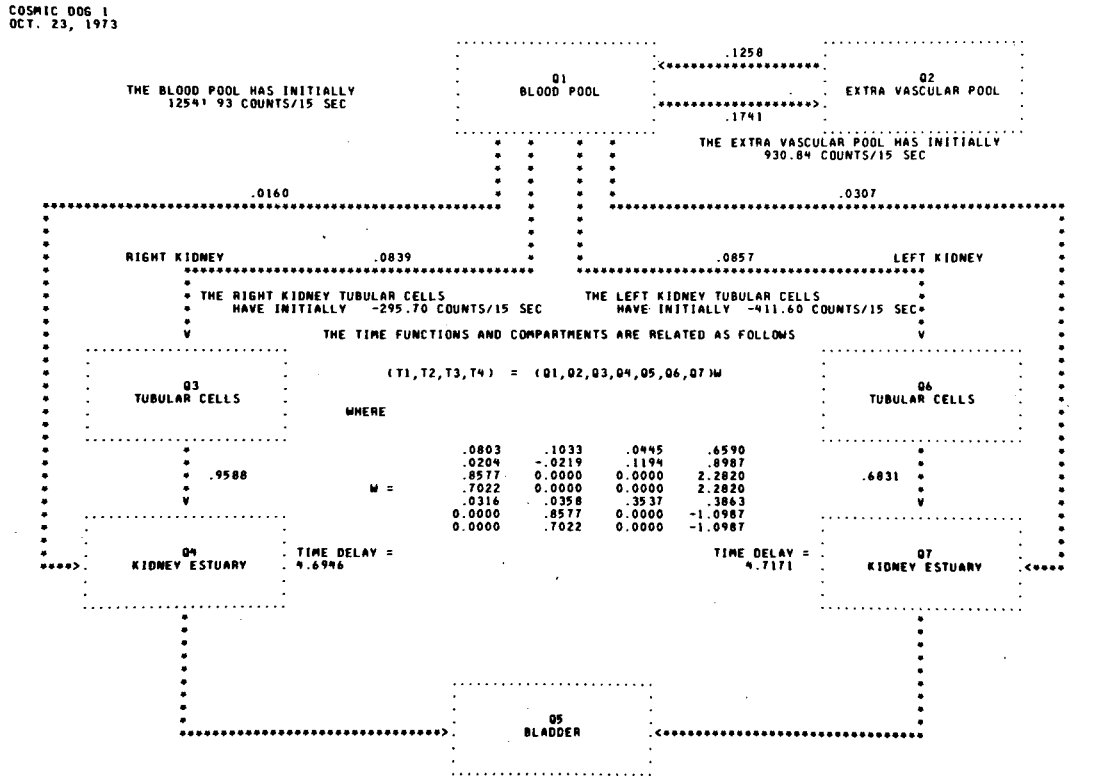

Figure 14. A comparison between a kidney model where the time functions are evaluated using SUBROUTINE TF27 in the upper figure and SUBROUTINE TF24 in the lower figure. The fitted chi-squares for the sample of 118 time points equal 9725 and 584 for the upper and lower models respectively.

9.0 CONCLUSION

Nonlinear estimation problems have the undesirable property that a local minimum need not be a global minimum; whereas, for linear estimation problems any local minimum is also a global minimum, since the least-squares function

$$R(A) = [W-Aw]^T \psi^{-1} [W-Aw] \tag{45}$$

is a convex function in terms of the elements of the matrix A. In the non-linear estimation problem such as the kidney compartment model, one needs to carefully select the initial solution in order that the parameters converge to a global minimum. Frequently the minimum solution will give parameters which do not represent the physical situation if the initial solution is poor.

Some of this difficulty can be overcome by constraining the parameters for the model where the least-squares function

$$R(\beta) = [W-w(\beta)]^T \psi^{-1} [W-w(\beta)]$$

is subject to the constraints

$$\ell_i \leq \beta_i \leq \mu_i \ , \ i= 1,m.$$

Fiacco and McCormick [13] show how this constrained minimization problem can be transformed into an unconstrained minimization problem which has a sequence of minimum solutions $\hat{\beta}_\ell$ to the functions

$$R_\ell(\beta) = [W-w(\beta)]^T\psi^{-1} [W-w(\beta)] - r_\ell \sum_{i=1}^{m} [\ln(\mu_i-\beta_i) + \ln(\beta_i-\ell_i)] \tag{46}$$

which converge to the optimum solution for the constrained problem as the sequence of real numbers r_ℓ converge to 0. The logarithmic

terms transform the original least-squares formulation into a function with smooth behavior near the boundaries of the constraints, and therefore allows one to use unconstrained minimization techniques.

Implementation of the kidney compartment model does not give consistent results because: 1) there is high correlation between some of the kidney parameters which leads to numerical instability; 2) there is no objective method of estimating the proper cross-talk matrix to use for a particular data sample; 3) in some situations the estimates for some of the parameters of the cross-talk matrix are not statistically significant and modeling for these parameters may lead to degeneracies in the solution; 4) photon attenuation is not explicitly taken into account; 5) free iodine might be present in some studies; and 6) inadequate statistics occur in large animal and human studies due to radiation dose constraints. These problems can be dealt with in a systematic fashion if adequate statistics are available. ^{123}I-iodohippurate will give about 50 times the useable photons for equivalent dose of ^{131}I-iodohippurate, thus further dog studies and a clinical trial are planned.

Reconstructing transverse sections of the kidney as a function of time would reduce the effects of compartment cross-coupling. Computer methods [19] have already been developed for reconstructing transverse sections of static gamma images from multiple projections. However, transverse section reconstruction of dynamic studies requires rapid measurement of data from multiple views and therefore awaits the development of a system for dynamic imaging in transverse section such as the positron ring detector [20].

ACKNOWLEDGEMENTS

This work was supported by the Energy Research and Development Administration. The encouragement and help of Dr. Thomas Budinger is greatly appreciated. I also appreciate the discussions with Dr. Michael Goris and the encouragement and discussions with Dr. James McRae. I want to thank Mr. Bill Kennedy who supplied the mouse data, Dr. Ronald Huesman who helped with some of the computer applications, and Mr. Brian Moyer for help with the data collection.

Appendix A - KIDNEY COMPUTER PROGRAM

This section gives a listing of the kidney computer programs and the subroutines for both the two kidney model and the one kidney model with and without glomerular filtration. The parameters α, u, τ, γ of the kidney compartment model and the optimum solutions of the completed program are stored in the matrix A. Each program listing gives comments identifying the parameters in the calling sequence.

The program has several output options such as plots, flow diagrams, and parameter listings. The time functions are generated by the SUBROUTINES CHIG1 and CHIW1 for the one kidney model with and without glomerular filtration, and CHIG2 and GHIW2 for the two kidney model with and without glomerular filtration. The algorithm which evaluates the parameters for these models is coded in the SUBROUTINE MARQ and requires an explicit expression for the partial derivatives of the compartment equations with respect to each parameter. The SUBROUTINES PARG1, PARW1, PARG2, and PARW2 evaluate these partial derivatives.

The user has the option of using double precision in evaluating the sums in equations (31) and (32), which are evaluated in the SUBROUTINES PARG1, PARW1, PARG2, and PARW2. Double precision is used if the variable IDOUBL is equal to 1. In some cases double precision gives a matrix B [equation (29)] which is better conditioned, however, the computing time is increased. In the SUBROUTINE INVPD, double precision is used in order to insure better accuracy in the evaluation of the square root of a variable at a critical point in the algorithm. These steps are taken so that the matrix B will be better conditioned and its inverse is more accurately calculated.

Equation (19) gives a relationship between the predicted time functions W_j and the compartment equations $q_i(t)$. The subroutines MATXIJ, PARIJ, PRMIJ, and TFIJ where I = 1,2 and J = 1,...,8 correspond to a particular matrix γ in equation (19). For example, for the matrix

$$\gamma = \begin{pmatrix} \gamma_2 & \gamma_3 & \gamma_1 & \gamma_1 & \gamma_4 & 0 & 0 \\ \gamma_6 & \gamma_7 & 0 & 0 & \gamma_8 & \gamma_5 & \gamma_5 \\ \gamma_{10} & \gamma_{11} & 0 & 0 & \gamma_9 & 0 & 0 \\ \gamma_{12} & \gamma_{13} & \gamma_{15} & \gamma_{15} & \gamma_{14} & \gamma_{16} & \gamma_{16} \end{pmatrix}$$

the subroutines MATX21, PAR21, PRM21, and TF21 are the appropriate subroutines called by the corresponding subroutines FLOW2, PARG2 or PARW2, PRAM2 and CHIG2 or CHIW2 for the two kidney model. Likewise for the one kidney model the subroutines FLOW1, PARG1 or PARW1, PRAM1 and CHIG1 or CHIW1 will call the corresponding subroutines MATX11, PAR11, PRM11, and TF11. In the description of the subroutines the matrix γ^T is identified as the matrix W.

INDEX OF PROGRAMS AND SUBROUTINES

PROGRAMS

KIDREM - Main program for one kidney model
KIDNEY - Main program for two kidney model

SUBROUTINES

CHIG1 - Evaluates chi-square for one kidney model with glomerular filtration
CHIG2 - Evaluates chi-square for two kidney model with glomerular filtration
CHIW1 - Evaluates chi-square for one kidney model without glomerular filtration
CHIW2 - Evaluates chi-square for two kidney model without glomerular filtration
FLOW1 - Prints flow diagram for one kidney model
FLOW2 - Prints flow diagram for two kidney model
INV - Matrix inverse for any square matrix
INVPD - Matrix inverse for a positive semi-definite matrix
LINMAX - Scales the step size
MARQ - Determines the minimum of the chi-square function
MATX11 - Prints the matrix W for the one kidney model
MATX21 -
MATX22 -
MATX23 -
MATX24 -
MATX25 -
MATX26 -
MATX27 -
MATX28 -
Each subroutine prints a different matrix W which relates the time functions to the compartment equations for the two kidney model.
PARG1 - Evaluates partial derivatives for one kidney model with glomerular filtration
PARG2 - Evaluates partial derivatives for two kidney model with glomerular filtration
PARW1 - Evaluates partial derivatives for one kidney model without glomerular filtration
PARW2 - Evaluates partial derivatives for two kidney model without glomerular filtration
PAR11 - Evaluates the partial derivatives of the time functions with respect to the model parameters for the one kidney model
PAR21 -
PAR22 -
PAR23 -
PAR24 -
PAR25 -
PAR26 -
PAR27 -
PAR28 -
Evaluates the partial derivatives of the time functions with respect to the model parameters for the two kidney model. Each subroutine corresponds to a different relationship between the compartments and the time functions
PLOT - Plots the actual data and fitted curves
PRAM1 - Prints table of parameters for one kidney model
PRAM2 - Prints table of parameters for two kidney model

PRM11 - Prints the functional relationship between the time functions and the compartment equations for a one kidney model

PRM21 -
PRM22 -
PRM23 -
PRM24 -
PRM25 -
PRM26 -
PRM27 -
PRM28 -

Prints the functional relationship between the time functions and the compartment equations for a two kidney model. Each subroutine corresponds to a different relationship between the compartments and the time functions

SOLUT - Prints the final results

TABLE - Prints a table for the parameters

TEST - Tests for convergence

TF11 - Generates time function values for each time function in the one kidney model

TF21 -
TF22 -
TF23 -
TF24 -
TF25 -
TF26 -
TF27 -
TF28 -

Generates time function values for each time function in the two kidney model. Each subroutine corresponds to a different relationship between the compartments and the time functions

```
      PROGRAM KIDREM(INPUT,OUTPUT)
C
C             THE PROGRAM KIDREM EVALUATES THE PARAMETERS FOR THE
C                 MULTIPARAMETER KIDNEY COMPARTMENT MODEL.  THE DATA IS
C                 COLLECTED ON A HP5407A COMPUTER SYSTEM AND ORGANIZED
C                 INTO THREE TIME FUNCTIONS - BLOOD AND TISSUE, KIDNEY,
C                 AND BLADDER.  THIS MODEL IS FOR A SINGLE KIDNEY WHERE
C                 THE OTHER KIDNEY HAS BEEN REMOVED.
C
C             INPUT  - THE FILE WHICH STORES THE TIME FUNCTION DATA AND
C                      OTHER INPUT PARAMETERS
C             OUTPUT - OUTPUT FILE
C
C             A      - THE PARAMETERS FOR THE KIDNEY MODEL
C             T      - TIME POINTS
C             R      - DATA ARRAY FOR THE TIME FUNCTIONS
C             H      - GENERATED TIME FUNCTIONS
C             Q1     - VASCULAR POOL TIMEFUNCTION
C             Q2     - TISSUE FLUID POOL TIMEFUNCTION
C             Q3     - KIDNEY TUBULAR CELL POOL TIME FUNCTION
C             Q4     - KIDNEY ESTUARY POOL TIME FUNCTION
C             Q5     - BLADDER TIME FUNCTION
C             N      - NUMBER OF DATA POINTS FOR EACH TIME FUNCTION
C             N1     - NUMBER OF TIME FUNCTIONS
C             M      - NUMBER OF PARAMETERS
C
      DIMENSION IR(150),A(32),XLOW(32),XUPP(32)
      DIMENSION NAME(20),IDATE(20),XLINMAX(27),ICOLL(27)
      COMMON/FNT/T(150),R(600),H(600)
      COMMON/CONST/N,N1,M,M1
      DIMENSION IRX(150)
      EXTERNAL CHIG1,PARG1,PRAM1,FLOW1
      EXTERNAL TF11,PAR11,PRM11,MATX11
      LOGICAL LG
      READ 106,(NAME(I),I=1,20)
      READ 106,(IDATE(I),I=1,20)
      READ 105,N1
      READ 115,NN
      READ 115,NS
      READ 114,TIME
      READ 105,M
      READ 105,M1
      READ 115,MCI
      READ 111,(ICOLL(I),I=1,27)
      PRINT 100
      PRINT 101
      PRINT 107,(NAME(I),I=1,20)
      PRINT 101
      PRINT 107,(IDATE(I),I=1,20)
      PRINT 101
      PRINT 108,N1
      PRINT 101
      N=NN-NS+1
      PRINT 110,N
      PRINT 101
      PRINT 155,M
      PRINT 101
      PRINT 156
      PRINT 157,M1
      PRINT 101
      PRINT 116,MCI
```

```
      PRINT 101
      PRINT 117,(ICOLL(I),I=1,27)
      PRINT 102
      DO 50 K=1,N1
      READ 140,(IR(I),I=1,NN)
      DO 50 J=NS,NN
      NJ=(K-1)*N+J-NS+1
      R(NJ)=FLOAT(IR(J))
   50 CONTINUE
      PRINT 122
      PRINT 123,TIME,TIME,TIME
      DO 2 K=1,N
      NK=N+K
      N2=2*N+K
      T(K)=FLOAT(K)*TIME/60.
      PRINT 131,K,T(K),R(N2),R(K),R(NK)
    2 CONTINUE
      MU=M1-4
      DO 87 I=1,MU
      READ 167,A(I),XLINMAX(I),XLOW(I),XUPP(I)
   87 CONTINUE
      ML=MU+1
      MU=M1-1
      DO 88 I=ML,MU
      READ 164,A(I),XLINMAX(I),XLOW(I),XUPP(I)
   88 CONTINUE
      ML=MU+1
      DO 89 I=ML,M
      READ 167,A(I),XLINMAX(I),XLOW(I),XUPP(I)
   89 CONTINUE
      CALL TABLE(A,XLINMAX,M)
      CALL PRAM1 (A,1,PRM11,1)
      CALL CHIG1 (A,HF,TF11)
      PRINT 300,HF
      CALL PLOT(TIME)
      CALL MARQ (A,XLINMAX,CHIG1,TF11,PARG1,PAR11,0,100,1)
      CALL SOLUT(A,NAME,IDATE,TIME,PRAM1,PRM11,CHIG1,TF11,PARG1,PAR11,
     1           FLOW1,MATX11,1)
C
  100 FORMAT(1H1,20(/),39X,50H*************KIDNEY COMPARTMENT MODEL*****
     2********)
  101 FORMAT(39X,1H*,48X,1H*)
  102 FORMAT(39X,50(1H*))
  105 FORMAT(I2)
  106 FORMAT(20A1)
  111 FORMAT(27A1)
  107 FORMAT(39X,1H*,1X,20A1,27X,1H*)
  108 FORMAT(39X,1H*,1X,*THE NO. OF TIMEFUNCTIONS IS *,I1,18X,1H*)
  110 FORMAT(39X,1H*,1X,*THE SAMPLE SIZE IS *,I3,25X,1H*)
  114 FORMAT(F3.0)
  115 FORMAT(I3)
  116 FORMAT(39X,1H*,1X,*THE ISOTOPE SOURCE IS *,I3,* MICROCURIES OF*,7X
     2,1H*/39X,1H*,5X,*I131-HIPPURAN*,30X,1H*)
  117 FORMAT(39X,1H*,1X,*THE COLLIMATOR IS A *,27A1,1H*)
  122 FORMAT(1H1,75X,*DATA*//17X,*I*,13X,*T(I)*,14X,*BLOOD AND TISSUE*,1
     C1X,*KIDNEY*,13X,*BLADDER*)
  123 FORMAT(28X,*TIME(MINS)*,14X,*COUNTS/*,F2.0,* SEC*,9X,*COUNTS/*,F2.
     C0,* SEC*,9X,*COUNTS/*,F2.0,* SEC*/)
  131 FORMAT(16X,I3,5X,F12.2,5X,3(10X,F12.4))
  140 FORMAT(14I5)
  155 FORMAT(39X,1H*,1X,*THE NO. OF PARAMETERS IS *,I2,20X,1H*)
  156 FORMAT(39X,1H*,1X,*THE NO. OF PARAMETERS NOT INCLUDING*,12X,1H*)
```

```
157 FORMAT(39X,1H*,6X,*THE CROSS TALK MATRIX IS *,I2,15X,1H*)
164 FORMAT(4(F7.1,2X))
167 FORMAT(4(F4.2,2X))
300 FORMAT(/,*HF= *,E9.2)
    END
```

```
      PROGRAM KIDNEY(INPUT,OUTPUT)
C
C           THE PROGRAM KIDNEY EVALUATES THE PARAMETERS FOR THE
C                MULTIPARAMETER KIDNEY COMPARTMENT MODEL.  THE DATA IS
C                COLLECTED ON A HP5407A COMPUTER SYSTEM AND ORGANIZED
C                INTO FOUR TIME FUNCTIONS - BLOOD AND TISSUE, RIGHT
C                KIDNEY, LEFT KIDNEY, AND BLADDER.
C
C            INPUT  - THE FILE WHICH STORES THE TIME FUNCTION DATA AND
C                     OTHER INPUT PARAMETERS
C            OUTPUT - OUTPUT FILE
C
C            A      - THE PARAMETERS FOR THE KIDNEY MODEL
C            T      - TIME POINTS
C            R      - DATA ARRAY FOR THE TIME FUNCTIONS
C            H      - GENERATED TIME FUNCTIONS
C            Q1     - VASCULAR POOL TIMEFUNCTION
C            Q2     - EXTRA VASCULAR POOL TIME FUNCTION
C            Q3     - RIGHT KIDNEY TUBULAR CELLS TIME FUNCTION
C            Q4     - RIGHT KIDNEY ESTUARY TIME FUNCTION
C            Q5     - BLADDER TIME FUNCTION
C            Q6     - LEFT KIDNEY TUBULAR CELLS TIME FUNCTION
C            Q7     - LEFT KIDNEY ESTUARY TIME FUNCTION
C            NN     - NUMBER OF DATA POINTS READ IN FOR EACH TIME FUNCT
C            NS     - THE FIRST DATA POINT FOR THE SAMPLE
C            N      - NUMBER OF DATA POINTS FOR EACH TIME FUNCTION
C            N1     - NUMBER OF TIME FUNCTIONS
C            M      - NUMBER OF PARAMETERS
C
      DIMENSION IR(150),A(32),XLOW(32),XUPP(32)
      DIMENSION NAME(20),IDATE(20),XLINMAX(27),ICOLL(27)
      COMMON/FNT/T(150),R(600),H(600)
      COMMON/CONST/N,N1,M,M1
      LOGICAL LG
      EXTERNAL CHIG2,PARG2,PRAM2,FLOW2
      EXTERNAL TF21,PAR21,PRM21,MATX21
      READ 106,(NAME(I),I=1,20)
      READ 106,(IDATE(I),I=1,20)
      READ 105,N1
      READ 115,NN
      READ 115,NS
      READ 114,TIME
      READ 105,M
      READ 105,M1
      READ 115,MCI
      READ 111,(ICOLL(I),I=1,27)
      PRINT 100
      PRINT 101
      PRINT 107,(NAME(I),I=1,20)
      PRINT 101
      PRINT 107,(IDATE(I),I=1,20)
      PRINT 101
      PRINT 108,N1
      PRINT 101
      N=NN-NS+1
      PRINT 110,N
      PRINT 101
      PRINT 155,M
      PRINT 101
      PRINT 156
      PRINT 157,M1
```

```
      PRINT 101
      PRINT 116,MCI
      PRINT 101
      PRINT 117,(ICOLL(I),I=1,27)
      PRINT 102
      DO 50 K=1,N1
      READ 140,(IR(I),I=1,NN)
      DO 50 J=NS,NN
      NJ=(K-1)*N+J-NS+1
      R(NJ)=FLOAT(IR(J))
   50 CONTINUE
      PRINT 122
      PRINT 123,TIME,TIME,TIME,TIME
      DO 2 K=1,N
      NK=N+K
      N2=2*N+K
      N3=3*N+K
      T(K)=FLOAT(K)*TIME/60.
      PRINT 131,K,T(K),R(N3),R(K),R(NK),R(N2)
    2 CONTINUE
      MU=M1-6
      DO 87 I=1,MU
      READ 167,A(I),XLINMAX(I)
   87 CONTINUE
      ML=MU+1
      MU=M1-2
      DO 88 I=ML,MU
      READ 164,A(I),XLINMAX(I)
   88 CONTINUE
      ML=MU+1
      DO 89 I=ML,M
      READ 167,A(I),XLINMAX(I)
   89 CONTINUE
      CALL TABLE(A,XLINMAX,M)
      CALL PRAM2 (A,1,PRM21,1)
      CALL CHIG2 (A,1,PRM21,1)
      PRINT 300,HF
      CALL PLOT(TIME)
      CALL MARQ(A,XLINMAX,CHIG2,TF21,PARG2,PAR21,0,200,1)
      CALL SOLUT(A,NAME,IDATE,TIME,PRAM2,PRM21,CHIG2,TF21,PARG2,PAR21,
     1           FLOW2,MATX21,1)
C
  100 FORMAT(1H1,20(/),39X,50H*************KIDNEY COMPARTMENT MODEL*****
     2********)
  101 FORMAT(39X,1H*,48X,1H*)
  102 FORMAT(39X,50(1H*))
  105 FORMAT(I2)
  106 FORMAT(20A1)
  107 FORMAT(39X,1H*,1X,20A1,27X,1H*)
  108 FORMAT(39X,1H*,1X,*THE NO. OF TIMEFUNCTIONS IS *,I1,18X,1H*)
  110 FORMAT(39X,1H*,1X,*THE SAMPLE SIZE IS *,I3,25X,1H*)
  111 FORMAT(27A1)
  114 FORMAT(F3.0)
  115 FORMAT(I3)
  116 FORMAT(39X,1H*,1X,*THE ISOTOPE SOURCE IS *,I3,* MICROCURIES OF*,7X
     2,1H*/39X,1H*,5X,*I131-HIPPURAN*,30X,1H*)
  117 FORMAT(39X,1H*,1X,*THE COLLIMATOR IS A *,27A1,1H*)
  122 FORMAT(1H1,64X,*DATA*//6X,*I*,13X,*T(I)*,14X,*BLOOD AND TISSUE*,9X
     2,*RIGHT KIDNEY*,11X,*LEFT KIDNEY*,13X,*BLADDER*)
  123 FORMAT(17X,*TIME(MINS)*,14X,*COUNTS/*,F2.0,* SEC*,9X,*COUNTS/*,F2.
     0,* SEC*,9X,*COUNTS/*,F2.0,* SEC*,9X,*COUNTS/*,F2.0,* SEC*/)
  131 FORMAT(5X,I3,5X,F12.2,5X,4(10X,F12.4))
```

```
140 FORMAT(14(I4,1X))
155 FORMAT(39X,1H*,1X,*THE NO. OF PARAMETERS IS *,I2,20X,1H*)
156 FORMAT(39X,1H*,1X,*THE NO. OF PARAMETERS NOT INCLUDING*,12X,1H*)
157 FORMAT(39X,1H*,6X,*THE CROSS TALK MATRIX IS *,I2,15X,1H*)
164 FORMAT(4(F7.1,2X))
167 FORMAT(4(F4.2,2X))
300 FORMAT(/,*HF= *,E9.2)
    END
```

```
      SUBROUTINE CHIG1 (A,HF,TF)
C
C        THE SUBROUTINE CHIG1 EVALUATES THE CHI-SQUARE HF FOR THE ONE
C             KIDNEY MODEL WITH GLOMERULAR FILTRATION.
C
C           A  - THE PARAMETERS FOR THE MODEL
C
C         A(1) - FLOW RATE FROM BLOOD POOL TO TISSUE FLUID POOL
C         A(2) - FLOW RATE FROM TISSUE FLUID POOL TO BLOOD POOL
C         A(3) - FLOW RATE FROM BLOOD POOL TO TUBULAR CELLS
C         A(4) - GLOMERULAR FILTRATION RATE
C         A(5) - TUBULAR CELL FLOW RATE(RIGHT KIDNEY)
C         A(6) - AMOUNT AT TIME ZERO IN THE BLOOD POOL
C         A(7) - AMOUNT AT TIME ZERO IN TISSUE FLUID POOL
C         A(8) - AMOUNT AT TIME ZERO IN THE KIDNEY TUBULAR CELLS
C         A(9) - KIDNEY ESTUARY DELAY TIME
C         A(10) THUR A(32) IS THE CROSS TALK MATRIX
C
C           HF - THE VALUE OF THE CHI-SQSUARE
C           TF - SUBROUTINE WHICH GENERATES THE TIME FUNCTIONS
C
C        THE SUBROUTINE ALSO GIVES
C          H  - STORES THE TIME FUNCTIONS T1, T2, AND T3
C          Q1 - VASCULAR POOL
C          Q2 - TISSUE FLUID POOL
C          Q3 - KIDNEY TUBULAR CELLS
C          Q4 - KIDNEY ESTUARY
C          Q5 - BLADDER POOL
C
      DIMENSION A(32)
      COMMON/FNT/T(150),R(600),H(600)
      COMMON/QFN/Q1(150),Q2(150),Q3(150),Q4(150),Q5(150)
      COMMON/CONST/N,N1,M,M1
      COMMON/EXPP/EXP1,EXP2,EXA5,EXA8
      COMMON/ROOT/C(8),P1,P2,PP,S1
      QQ3(B,X,Y,EX,U)=B*(C(1)*X*(EXP1-EX)+C(2)*Y*(EXP2-EX))+U*EX
      QQ4(A3,A5,CC1,CC2,A4,EX,U)=A3*A5*(C(1)*CC1*((EXP1-1.)/P1-(1.-EX)/A
     15)+C(2)*CC2*((EXP2-1.)/P2-(1.-EX)/A5))+U*(1.-EX)+A4*(C(1)*(EXP1-1.
     2)/P1+C(2)*(EXP2-1.)/P2)
      PP=A(1)+A(3)+A(4)
      S1=SQRT((PP+A(2))**2-4.*(PP-A(1))*A(2))
      P1=(S1-PP-A(2))/2.
      P2=(-S1-PP-A(2))/2.
      C(1)=(A(6)*(P1+A(2))+A(7)*A(2))/(P1-P2)
      C(2)=(A(6)*(P2+A(2))+A(7)*A(2))/(P2-P1)
      C(3)=(A(7)*(P1+PP)+A(6)*A(1))/(P1-P2)
      C(4)=(A(7)*(P2+PP)+A(6)*A(1))/(P2-P1)
      C(5)=1./(A(5)+P1)
      C(6)=1./(A(5)+P2)
      DO 18 K=1,N
      K1=N+K
      K2=2*N+K
      K3=3*N+K
      EXP1=EXP(P1*T(K))
      EXP2=EXP(P2*T(K))
      EXA5=EXP(-A(5)*T(K))
      Q1(K)=C(1)*EXP1+C(2)*EXP2
      Q2(K)=C(3)*EXP1+C(4)*EXP2
      Q3(K)=QQ3(A(3),C(5),C(6),EXA5,A(8))
      Q4(K)=QQ4(A(3),A(5),C(5),C(6),A(4),EXA5,A(8))
      IF (T(K)-A(9)) 12,12,10
   10 X=T(K)-A(9)
```

```
      EXP1=EXP(P1*X)
      EXP2=EXP(P2*X)
      EXA5=EXP(-A(5)*X)
      Q4Q=QQ4(A(3),A(5),C(5),C(6),A(4),EXA5,A(8))
      Q4(K)=Q4(K)-Q4Q
   12 Q5(K)=0.
      IF (T(K)-A(9)) 16,16,14
   14 Q5(K)=Q4Q
   16 CALL TF (A,K)
   18 CONTINUE
      HF=0.
      DO 20 N3=1,N1
      DO 20 K=1,N
      N6=K+N*(N3-1)
      HF=HF+(R(N6)-H(N6))**2/R(N6)
   20 CONTINUE
      RETURN
      END
```

```
      SUBROUTINE CHIG2 (A,HF,TF)
C
C        THE SUBROUTINE CHIG2 EVALUATES THE CHI-SQUARE HF FOR THE TWO
C             KIDNEY MODEL WITH GLOMERULAR FILTRATION.
C
C           A  - THE PARAMETERS OF THE MODEL
C
C         A(1) - FLOW RATE FROM BLOOD POOL TO TISSUE FLUID POOL
C         A(2) - FLOW RATE FROM TISSUE FLUID POOL TO BLOOD POOL
C         A(3) - FLOW RATE FROM BLOOD POOL TO TUBULAR CELLS (RT KID)
C         A(4) - GLOMERULAR FILTRATION RATE(RIGHT KIDNEY)
C         A(5) - TUBULAR CELL FLOW RATE(RIGHT KIDNEY)
C         A(6) - FLOW RATE FROM BLOOD POOL TO TUBULAR CELLS (LF KID)
C         A(7) - GLOMERULAR FILTRATION RATE(LEFT KIDNEY)
C         A(8) - TUBULAR CELL FLOW RATE(LEFT KIDNEY)
C         A(9) - AMOUNT AT TIME ZERO IN THE BLOOD POOL
C         A(10) - AMOUNT AT TIME ZERO IN TISSUE FLUID POOL
C         A(11) - AMOUNT AT TIME ZERO IN THE RIGHT KIDNEY TUBULAR CELLS
C         A(12) - AMOUNT AT TIME ZERO IN THE LEFT KIDNEY TUBULAR CELLS
C         A(13) - RIGHT KIDNEY ESTUARY DELAY TIME
C         A(14) - LEFT KIDNEY ESTUARY DELAY TIME
C         A(15) THUR A(32) IS THE CROSS TALK MATRIX
C
C           HF - THE VALUE OF THE CHI-SQUARE
C           TF - SUBROUTINE WHICH GENERATES THE TIME FUNCTIONS
C
C        THE SUBROUTINE ALSO GIVES
C          H - STORES THE TIMEFUNCTIONS T1,T2,T3,T4
C          Q1 - VASCULAR POOL
C          Q2 - TISSUE FLUID POOL
C          Q3 - RIGHT KIDNEY TUBULAR CELL POOL
C          Q4-  RIGHT KIDNEY ESTUARY POOL
C          Q5 - BLADDER POOL
C          Q6 - LEFT KIDNEY TUBULAR CELL POOL
C          Q7 - LEFT KIDNEY ESTUARY POOL
C
      DIMENSION A(32)
      COMMON/FNT/T(150),R(600),H(600)
      COMMON/QFN/Q1(150),Q2(150),Q3(150),Q4(150),Q5(150),Q6(150),Q7(150)
      COMMON/CONST/N,N1,M,M1
      COMMON/EXPP/EXP1,EXP2,EXA5,EXA8
      COMMON/ROOT/C(8),P1,P2,PP,S1
      QQ3(B,X,Y,EX,U)=B*(C(1)*X*(EXP1-EX)+C(2)*Y*(EXP2-EX))+U*EX
      QQ4(A3,A5,CC1,CC2,A4,EX,U)=A3*A5*(C(1)*CC1*((EXP1-1.)/P1-(1.-EX)/A
     15)+C(2)*CC2*((EXP2-1.)/P2-(1.-EX)/A5))+U*(1.-EX)+A4*(C(1)*(EXP1-1.
     2)/P1+C(2)*(EXP2-1.)/P2)
      PP=A(1)+A(3)+A(4)+A(6)+A(7)
      S1=SQRT((PP+A(2))**2-4.*(PP-A(1))*A(2))
      P1=(S1-PP-A(2))/2.
      P2=(-S1-PP-A(2))/2.
      C(1)=(A(9)*(P1+A(2))+A(10)*A(2))/(P1-P2)
      C(2)=(A(9)*(P2+A(2))+A(10)*A(2))/(P2-P1)
      C(3)=(A(10)*(P1+PP)+A(9)*A(1))/(P1-P2)
      C(4)=(A(10)*(P2+PP)+A(9)*A(1))/(P2-P1)
      C(5)=1./(A(5)+P1)
      C(6)=1./(A(5)+P2)
      C(7)=1./(A(8)+P1)
      C(8)=1./(A(8)+P2)
      DO 26 K=1,N
      K1=N+K
      K2=2*N+K
      K3=3*N+K
```

```
      EXP1=EXP(P1*T(K))
      EXP2=EXP(P2*T(K))
      EXA5=EXP(-A(5)*T(K))
      EXA8=EXP(-A(8)*T(K))
      Q1(K)=C(1)*EXP1+C(2)*EXP2
      Q2(K)=C(3)*EXP1+C(4)*EXP2
      Q3(K)=QQ3(A(3),C(5),C(6),EXA5,A(11))
      Q6(K)=QQ3(A(6),C(7),C(8),EXA8,A(12))
      Q4(K)=QQ4(A(3),A(5),C(5),C(6),A(4),EXA5,A(11))
      Q7(K)=QQ4(A(6),A(8),C(7),C(8),A(7),EXA8,A(12))
      IF (T(K)-A(13)) 12,12,10
   10 X=T(K)-A(13)
      EXP1=EXP(P1*X)
      EXP2=EXP(P2*X)
      EXA5=EXP(-A(5)*X)
      Q4Q=QQ4(A(3),A(5),C(5),C(6),A(4),EXA5,A(11))
      Q4(K)=Q4(K)-Q4Q
   12 IF (T(K)-A(14)) 16,16,14
   14 X=T(K)-A(14)
      EXP1=EXP(P1*X)
      EXP2=EXP(P2*X)
      EXA8=EXP(-A(8)*X)
      Q7Q=QQ4(A(6),A(8),C(7),C(8),A(7),EXA8,A(12))
      Q7(K)=Q7(K)-Q7Q
   16 Q5(K)=0.
      IF (T(K)-A(13)) 20,20,18
   18 Q5(K)=Q4Q
   20 IF (T(K)-A(14)) 24,24,22
   22 Q5(K)=Q5(K)+Q7Q
   24 CALL TF (A,K)
   26 CONTINUE
      HF=0.
      DO 28 N3=1,N1
      DO 28 K=1,N
      N6=K+N*(N3-1)
      HF=HF+(R(N6)-H(N6))**2/R(N6)
   28 CONTINUE
      RETURN
      END
```

```
      SUBROUTINE CHIW1 (A,HF,TF)
C
C        THE SUBROUTINE CHIW1 EVALUATES THE CHI-SQUARE HF FOR THE ONE
C             KIDNEY MODEL WITHOUT GLOMERULAR FILTRATION.
C
C            A  - THE PARAMETERS OF THE MODEL
C
C          A(1)  - FLOW RATE FROM BLOOD POOL TO TISSUE FLUID POOL
C          A(2)  - FLOW RATE FROM TISSUE FLUID POOL TO BLOOD POOL
C          A(3)  - FLOW RATE FROM BLOOD POOL TO TUBULAR CELLS
C          A(4) - GLOMERULAR FILTRATION RATE
C          A(5)  - AMOUNT AT TIME ZERO IN THE BLOOD POOL
C          A(6)  - AMOUNT AT TIME ZERO IN TISSUE FLUID POOL
C          A(7)  - AMOUNT AT TIME ZERO IN THE KIDNEY TUBULAR CELLS
C          A(8)  - KIDNEY ESTUARY DELAY TIME
C          A(9) THUR A(32) IS THE CROSS TALK MATRIX
C
C            HF - THE VALUE OF THE CHI-SQUARE
C            TF - SUBROUTINE WHICH GENERATES THE TIME FUNCTIONS
C
C        THE SUBROUTINE ALSO GIVES
C          H  - STORES THE TIME FUNCTIONS T1,T2,T3
C          Q1 - VASCULAR POOL
C          Q2 - TISSUE FLUID POOL
C          Q3 - KIDNEY TUBULAR CELL POOL
C          Q4 - KIDNEY ESTUARY POOL
C          Q5 - BLADDER POOL
C
      COMMON/FNT/T(150),R(600),H(600)
      COMMON/QFN/Q1(150),Q2(150),Q3(150),Q4(150),Q5(150)
      COMMON/CONST/N,N1,M,M1
      COMMON/EXPP/EXP1,EXP2,EXA4,EXA6
      COMMON/ROOT/C(8),P1,P2,PP,S1
      DIMENSION A(32)
      QQ3(B,X,Y,EX,U)=B*(C(1)*X*(EXP1-EX)+C(2)*Y*(EXP2-EX))+U*EX
      QQ4(A3,A5,CC1,CC2,EX,U)=A3*A5*(C(1)*CC1*((EXP1-1.)/P1-(1.-EX)/A5)+
     1C(2)*CC2*((EXP2-1.)/P2-(1.-EX)/A5))+U*(1.-EX)
      PP=A(1)+A(3)
      S1=SQRT((PP+A(2))**2-4.*(PP-A(1))*A(2))
      P1=(S1-PP-A(2))/2.
      P2=(-S1-PP-A(2))/2.
      C(1)=(A(5)*(P1+A(2))+A(6)*A(2))/(P1-P2)
      C(2)=(A(5)*(P2+A(2))+A(6)*A(2))/(P2-P1)
      C(3)=(A(6)*(P1+PP)+A(5)*A(1))/(P1-P2)
      C(4)=(A(6)*(P2+PP)+A(5)*A(1))/(P2-P1)
      C(5)=1./(A(4)+P1)
      C(6)=1./(A(4)+P2)
      DO 18 K=1,N
      K1=N+K
      K2=2*N+K
      K3=3*N+K
      EXP1=EXP(P1*T(K))
      EXP2=EXP(P2*T(K))
      EXA4=EXP(-A(4)*T(K))
      Q1(K)=C(1)*EXP1+C(2)*EXP2
      Q2(K)=C(3)*EXP1+C(4)*EXP2
      Q3(K)=QQ3(A(3),C(5),C(6),EXA4,A(7))
      Q4(K)=QQ4(A(3),A(4),C(5),C(6),EXA4,A(7))
      IF (T(K)-A(8)) 12,12,10
   10 X=T(K)-A(8)
      EXP1=EXP(P1*X)
      EXP2=EXP(P2*X)
```

```
      EXA4=EXP(-A(4)*X)
      Q4Q=QQ4(A(3),A(4),C(5),C(6),EXA4,A(7))
      Q4(K)=Q4(K)-Q4Q
   12 Q5(K)=0.
      IF (T(K)-A(8)) 16,16,14
   14 Q5(K)=Q4Q
   16 CALL TF (A,K)
   18 CONTINUE
      HF=0.
      DO 20 N3=1,N1
      DO 20 K=1,N
      N6=K+N*(N3-1)
      HF=HF+(R(N6)-H(N6))**2/R(N6)
   20 CONTINUE
      RETURN
      END
```

```
      SUBROUTINE CHIW2 (A,HF,TF)
C
C        THE SUBROUTINE CHIW2 EVALUATES THE CHI-SQUARE HF FOR THE TWO
C             KIDNEY MODEL WITHOUT GLOMERULAR FILTRATION.
C
C           A  - THE PARAMETERS OF THE MODEL
C
C         A(1)  - FLOW RATE FROM BLOOD POOL TO TISSUE FLUID POOL
C         A(2)  - FLOW RATE FROM TISSUE FLUID POOL TO BLOOD POOL
C         A(3)  - FLOW RATE FROM BLOOD POOL TO TUBULAR CELLS (RT KID)
C         A(4)  - TUBULAR CELL FLOW RATE(RIGHT KIDNEY)
C         A(5)  - FLOW RATE FROM BLOOD POOL TO TUBULAR CELLS (LF KID)
C         A(6)  - TUBULAR CELL FLOW RATE(LEFT KIDNEY)
C         A(7)  - AMOUNT AT TIME ZERO IN THE BLOOD POOL
C         A(8)  - AMOUNT AT TIME ZERO IN TISSUE FLUID POOL
C         A(9)  - AMOUNT AT TIME ZERO IN THE RIGHT KIDNEY TUBULAR CELLS
C         A(10) - AMOUNT AT TIME ZERO IN THE LEFT KIDNEY TUBULAR CELLS
C         A(11) - RIGHT KIDNEY ESTUARY DELAY TIME
C         A(12) - LEFT KIDNEY ESTUARY DELAY TIME
C         A(13) THUR A(32) IS THE CROSS TALK MATRIX
C
C           HF - THE VALUE OF THE CHI-SQUARE
C           TF - SUBROUTINE WHICH GENERATES THE TIME FUNCTIONS
C
C        THE SUBROUTINE ALSO GIVES
C         H - STORES THE TIMEFUNCTIONS T1,T2,T3,T4
C         Q1 - VASCULAR POOL
C         Q2 - TISSUE FLUID POOL
C         Q3 - RIGHT KIDNEY TUBULAR CELL POOL
C         Q4-  RIGHT KIDNEY ESTUARY POOL
C         Q5 - BLADDER POOL
C         Q6 - LEFT KIDNEY TUBULAR CELL POOL
C         Q7 - LEFT KIDNEY ESTUARY POOL
C
      DIMENSION A(32)
      COMMON/FNT/T(150),R(600),H(600)
      COMMON/QFN/Q1(150),Q2(150),Q3(150),Q4(150),Q5(150),Q6(150),Q7(150)
      COMMON/CONST/N,N1,M,M1
      COMMON/EXPP/EXP1,EXP2,EXA5,EXA8
      COMMON/ROOT/C(8),P1,P2,PP,S1
      QQ3(B,X,Y,EX,U)=B*(C(1)*X*(EXP1-EX)+C(2)*Y*(EXP2-EX))+U*EX
      QQ4(A3,A5,CC1,CC2,EX,U)=A3*A5*(C(1)*CC1*((EXP1-1.)/P1-(1.-EX)/A5)+
     1C(2)*CC2*((EXP2-1.)/P2-(1.-EX)/A5))+U*(1.-EX)
      PP=A(1)+A(3)+A(5)
      S1=SQRT((PP+A(2))**2-4.*(PP-A(1))*A(2))
      P1=(S1-PP-A(2))/2.
      P2=(-S1-PP-A(2))/2.
      C(1)=(A(7)*(P1+A(2))+A(8)*A(2))/(P1-P2)
      C(2)=(A(7)*(P2+A(2))+A(8)*A(2))/(P2-P1)
      C(3)=(A(8)*(P1+PP)+A(7)*A(1))/(P1-P2)
      C(4)=(A(8)*(P2+PP)+A(7)*A(1))/(P2-P1)
      C(5)=1./(A(4)+P1)
      C(6)=1./(A(4)+P2)
      C(7)=1./(A(6)+P1)
      C(8)=1./(A(6)+P2)
      DO 26 K=1,N
      K1=N+K
      K2=2*N+K
      K3=3*N+K
      EXP1=EXP(P1*T(K))
      EXP2=EXP(P2*T(K))
      EXA4=EXP(-A(4)*T(K))
```

```
      EXA6=EXP(-A(6)*T(K))
      Q1(K)=C(1)*EXP1+C(2)*EXP2
      Q2(K)=C(3)*EXP1+C(4)*EXP2
      Q3(K)=QQ3(A(3),C(5),C(6),EXA4,A(9))
      Q6(K)=QQ3(A(5),C(7),C(8),EXA6,A(10))
      Q4(K)=QQ4(A(3),A(4),C(5),C(6),EXA4,A(9))
      Q7(K)=QQ4(A(5),A(6),C(7),C(8),EXA6,A(10))
      IF (T(K)-A(11)) 12,12,10
   10 X=T(K)-A(11)
      EXP1=EXP(P1*X)
      EXP2=EXP(P2*X)
      EXA4=EXP(-A(4)*X)
      Q4Q=QQ4(A(3),A(4),C(5),C(6),EXA4,A(9))
      Q4(K)=Q4(K)-Q4Q
   12 IF (T(K)-A(12)) 16,16,14
   14 X=T(K)-A(12)
      EXP1=EXP(P1*X)
      EXP2=EXP(P2*X)
      EXA6=EXP(-A(6)*X)
      Q7Q=QQ4(A(5),A(6),C(7),C(8),EXA6,A(10))
      Q7(K)=Q7(K)-Q7Q
   16 Q5(K)=0.
      IF (T(K)-A(11)) 20,20,18
   18 Q5(K)=Q4Q
   20 IF (T(K)-A(12)) 24,24,22
   22 Q5(K)=Q5(K)+Q7Q
   24 CALL TF (A,K)
   26 CONTINUE
      HF=0.
      DO 28 N3=1,N1
      DO 28 K=1,N
      N6=K+N*(N3-1)
      HF=HF+(R(N6)-H(N6))**2/R(N6)
   28 CONTINUE
      RETURN
      END
```

```
      SUBROUTINE FLOW1 (A,NAME,IDATE,TIME,MATX,IGLOM)
C
C        THE SUBROUTINE FLOW1 PRINTS THE FLOW DIAGRAM FOR THE ONE
C             KIDNEY COMPARTMENT MODEL.
C
C          A      - THE PARAMETERS FOR THE MODEL
C          NAME   - THE NAME OF THE PERSON BEING STUDIED
C          IDATE  - THE DATE OF THE STUDY
C          TIME   - THE TIME INTERVAL FOR EACH SAMPLE COUNTS
C          MATX   - THE SUBROUTINE WHICH PRINTS OUT THE MATRIX WHICH
C                     RELATES THE TIME FUNCTIONS TO THE COMPARTMENTS
C          IGLOM  - IF IGLOM=1 THE MODEL HAS A PATH FOR GLOMERULAR
C                     FILTRATION
C
      DIMENSION NAME(20),IDATE(20),A(32)
      COMMON/STAR1/ISTAR,IDIF
      IF (IGLOM.EQ.1) GO TO 10
      ISTAR=1H
      IDIF=1
      GO TO 12
   10 ISTAR=1H*
      IDIF=0
   12 PRINT 24, (NAME(I),I=1,20)
      PRINT 26, (IDATE(I),I=1,20)
      PRINT 40
      PRINT 28, A(2)
      PRINT 30
      PRINT 32
      PRINT 34
      PRINT 36, A(6-IDIF),TIME
      PRINT 38, A(1)
      PRINT 40
      PRINT 42, ISTAR
      PRINT 44, ISTAR,A(7-IDIF),TIME
      DO 14 I=1,2
      PRINT 46, ISTAR
   14 CONTINUE
      IF (IGLOM.EQ.1) GO TO 16
      PRINT 46, ISTAR
      PRINT 46, ISTAR
      GO TO 18
   16 PRINT 48, A(4)
      PRINT 50
   18 DO 20 I=1,3
      PRINT 52, ISTAR
   20 CONTINUE
      PRINT 54, ISTAR,A(3)
      PRINT 56, ISTAR
      PRINT 58, ISTAR
      PRINT 60, ISTAR
      PRINT 62, ISTAR,A(8-IDIF),TIME
      PRINT 58, ISTAR
      PRINT 64, ISTAR
      PRINT 66, ISTAR
      PRINT 68, ISTAR
      PRINT 70, ISTAR
      PRINT 72, ISTAR
      PRINT 74, ISTAR
      PRINT 76, ISTAR
      PRINT 68, ISTAR
      PRINT 66, ISTAR
      CALL MATX (A)
```

```
      PRINT 68, ISTAR
      PRINT 78, ISTAR
      IF (IGLOM.EQ.1) PRINT 80, A(9)
      IF (IGLOM.NE.1) PRINT 82, A(8)
      PRINT 84
      PRINT 84
      PRINT 86
      DO 22 I=1,5
      PRINT 88
   22 CONTINUE
      PRINT 90
      PRINT 92
      PRINT 92
      PRINT 94
      PRINT 96
      PRINT 98
      PRINT 98
      PRINT 100
      RETURN
C
C
   24 FORMAT(1H1,20A1)
   26 FORMAT(1X,20A1)
   28 FORMAT(55X,*.*,23X,*.*,6X,F7.4,7X,*.*,23X,*.*)
   30 FORMAT(55X,*.*,23X,*.<*,19(1H*),*.*,23X,*.*)
   32 FORMAT(55X,*.*,11X,*Q1*,10X,*.*,20X,*.*,11X,*Q2*,10X,*.*)
   34 FORMAT(15X,*THE BLOOD POOL HAS INITIALLY*,12X,*.*,7X,*BLOOD POOL*,
     16X,*.*,20X,*.*,2X,*EXTRA VASCULAR POOL*,2X,*.*)
   36 FORMAT(19X,F9.2,* COUNTS/*,F2.0,* SEC*,13X,*.*,23X,*.*,19(1H*),*>.
     1*,23X,*.*)
   38 FORMAT(55X,*.*,23X,*.*,6X,F7.4,7X,*.*,23X,*.*)
   40 FORMAT(55X,25(*.*),20X,25(*.*))
   42 FORMAT(60X,A1,3X,1H*,20X,*THE EXTRA VASCULAR POOL HAS INITIALLY*)
   44 FORMAT(60X,A1,3X,1H*,25X,F9.2,* COUNTS/*,F2.0,* SEC*)
   46 FORMAT(60X,A1,3X,1H*)
   48 FORMAT(28X,F7.4,25X,1H*,3X,1H*)
   50 FORMAT(5X,56(1H*),3X,1H*)
   52 FORMAT(5X,A1,58X,1H*)
   54 FORMAT(5X,A1,14X,*KIDNEY*,17X,F7.4,14X,1H*)
   56 FORMAT(5X,A1,16X,43(1H*))
   58 FORMAT(5X,A1,16X,1H*)
   60 FORMAT(5X,A1,16X,1H*,1X,*THE KIDNEY TUBULAR CELLS*)
   62 FORMAT(5X,A1,16X,1H*,5X,*HAVE INITIALLY *,F9.2,* COUNTS/*,F2.0,*
     1 SEC*)
   64 FORMAT(5X,A1,16X,*V*,16X,*THE TIME FUNCTIONS AND  COMPARTMENTS ARE
     1 RELATED AS FOLLOWS*)
   66 FORMAT(5X,A1,4X,25(*.*))
   68 FORMAT(5X,A1,4X,*.*,23X,*.*)
   70 FORMAT(5X,A1,4X,*.*,23X,*.*,12X,*(T1,T2,T3)     =    (Q1,Q2,Q3,Q4,Q5
     1)W*)
   72 FORMAT(5X,A1,4X,*.*,11X,*Q3*,10X,*.*)
   74 FORMAT(5X,A1,4X,*.*,5X,*TUBULAR CELLS*,5X,*.*)
   76 FORMAT(5X,A1,4X,*.*,23X,*.*,7X,*WHERE*)
   78 FORMAT(5X,A1,4X,*.*,11X,*Q4*,10X,*.*,1X,*TIME DELAY =*)
   80 FORMAT(5X,5H****>,*.*,5X,*KIDNEY ESTUARY*,4X,*.*,F7.4)
   82 FORMAT(10X,*.*,5X,*KIDNEY ESTUARY*,4X,*.*,F7.4)
   84 FORMAT(10X,*.*,23X,*.*)
   86 FORMAT(10X,25(*.*))
   88 FORMAT(22X,1H*)
   90 FORMAT(22X,1H*,32X,25(*.*))
   92 FORMAT(22X,1H*,32X,*.*,23X,*.*)
   94 FORMAT(22X,1H*,32X,*.*,11X,*Q5*,10X,*.*)
```

```
 96 FORMAT(22X,32(1H*),*>.*,8X,*BLADDER*,8X,*.*)
 98 FORMAT(55X,*.*,23X,*.*)
100 FORMAT(55X,25(*.*))
    END
```

```
      SUBROUTINE FLOW2 (A,NAME,IDATE,TIME,MATX,IGLOM)
C
C        THE SUBROUTINE FLOW2 PRINTS THE FLOW DIAGRAM FOR THE TWO
C             KIDNEY COMPARTMENT MODEL.
C
C          A     - THE PARAMETERS FOR THE MODEL
C          NAME  - THE NAME OF THE PERSON BEING STUDIED
C          IDATE - THE DATE OF THE STUDY
C          TIME  - THE TIME INTERVAL FOR EACH SAMPLE COUNTS
C          MATX  - THE SUBROUTINE WHICH PRINTS OUT THE MATRIX WHICH
C                    RELATES THE TIME FUNCTIONS TO THE COMPARTMENTS
C          IGLOM - IF IGLOM=1 THE MODEL HAS A PATH FOR GLOMERULAR
C                    FILTRATION
C
      DIMENSION NAME(20),IDATE(20),A(32)
      COMMON/STAR2/ISTAR,IDIF1,IDIF2
      IF (IGLOM.EQ.1) GO TO 10
      ISTAR=1H
      IDIF1=1
      IDIF2=2
      GO TO 12
   10 ISTAR=1H*
      IDIF1=0
      IDIF2=0
   12 PRINT 24, (NAME(I),I=1,20)
      PRINT 26, (IDATE(I),I=1,20)
      PRINT 40
      PRINT 28, A(2)
      PRINT 30
      PRINT 32
      PRINT 34
      PRINT 36, A(9-IDIF2),TIME
      PRINT 38, A(1)
      PRINT 40
      PRINT 42, ISTAR,ISTAR
      PRINT 44, ISTAR,ISTAR,A(10-IDIF2),TIME
      DO 14 I=1,2
      PRINT 46, ISTAR,ISTAR
   14 CONTINUE
      IF (IGLOM.EQ.1) GO TO 16
      PRINT 46, ISTAR,ISTAR
      PRINT 46, ISTAR,ISTAR
      GO TO 18
   16 PRINT 48, A(4),A(7)
      PRINT 50
   18 DO 20 I=1,3
      PRINT 52, ISTAR,ISTAR
   20 CONTINUE
      PRINT 54, ISTAR,A(3),A(6-IDIF1),ISTAR
      PRINT 56, ISTAR,ISTAR
      PRINT 58, ISTAR,ISTAR
      PRINT 60, ISTAR,ISTAR
      PRINT 62, ISTAR,A(11-IDIF2),TIME,A(12-IDIF2),TIME,ISTAR
      PRINT 58, ISTAR,ISTAR
      PRINT 64, ISTAR,ISTAR
      PRINT 66, ISTAR,ISTAR
      PRINT 68, ISTAR,ISTAR
      PRINT 70, ISTAR,ISTAR
      PRINT 72, ISTAR,ISTAR
      PRINT 74, ISTAR,ISTAR
      PRINT 76, ISTAR,ISTAR
      PRINT 68, ISTAR,ISTAR
```

```
      PRINT 66, ISTAR,ISTAR
      CALL MATX (A)
      PRINT 68, ISTAR,ISTAR
      PRINT 78, ISTAR,ISTAR
      IF (IGLOM.EQ.1) PRINT 80, A(13),A(14)
      IF (IGLOM.NE.1) PRINT 82, A(11),A(12)
      PRINT 84
      PRINT 84
      PRINT 86
      DO 22 I=1,5
      PRINT 88
   22 CONTINUE
      PRINT 90
      PRINT 92
      PRINT 92
      PRINT 94
      PRINT 96
      PRINT 98
      PRINT 98
      PRINT 100
      RETURN
C
C
   24 FORMAT(1H1,20A1)
   26 FORMAT(1X,20A1)
   28 FORMAT(55X,*.*,23X,*.*,6X,F7.4,7X,*.*,23X,*.*)
   30 FORMAT(55X,*.*,23X,*.<*,19(1H*),*.*,23X,*.*)
   32 FORMAT(55X,*.*,11X,*Q1*,10X,*.*,20X,*.*,11X,*Q2*,10X,*.*)
   34 FORMAT(15X,*THE BLOOD POOL HAS INITIALLY*,12X,*.*,7X,*BLOOD POOL*,
     16X,*.*,20X,*.*,2X,*EXTRA VASCULAR POOL*,2X,*.*)
   36 FORMAT(19X,F9.2,* COUNTS/*,F2.0,* SEC*,13X,*.*,23X,*.*,19(1H*),*>.
     1*,23X,*.*)
   38 FORMAT(55X,*.*,23X,*.*,6X,F7.4,7X,*.*,23X,*.*)
   40 FORMAT(55X,25(*.*),20X,25(*.*))
   42 FORMAT(60X,A1,3X,1H*,5X,1H*,3X,A1,10X,*THE EXTRA VASCULAR POOL HAS
     1 INITIALLY*)
   44 FORMAT(60X,A1,3X,1H*,5X,1H*,3X,A1,15X,F9.2,* COUNTS/*,F2.0,* SEC*)
   46 FORMAT(60X,A1,3X,1H*,5X,1H*,3X,A1)
   48 FORMAT(28X,F7.4,25X,1H*,3X,1H*,5X,1H*,3X,1H*,25X,F7.4)
   50 FORMAT(5X,56(1H*),3X,1H*,5X,1H*,3X,56(1H*))
   52 FORMAT(5X,A1,58X,1H*,5X,1H*,58X,A1)
   54 FORMAT(5X,A1,9X,*RIGHT KIDNEY*,16X,F7.4,14X,1H*,5X,1H*,14X,F7.4,17
     1X,*LEFT KIDNEY*,9X,A1)
   56 FORMAT(5X,A1,16X,43(1H*),5X,43(1H*),16X,A1)
   58 FORMAT(5X,A1,16X,1H*,89X,1H*,16X,A1)
   60 FORMAT(5X,A1,16X,1H*,1X,*THE RIGHT KIDNEY TUBULAR CELLS    *,13X,*
     1THE LEFT KIDNEY TUBULAR CELLS    *,8X,1H*,16X,A1)
   62 FORMAT(5X,A1,16X,1H*,5X,*HAVE INITIALLY *,F9.2,* COUNTS/*,F2.0,* S
     1EC*,9X,*HAVE INITIALLY*,F9.2,* COUNTS/*,F2.0,* SEC*,1H*,16X,A1)
   64 FORMAT(5X,A1,16X,*V*,16X,*THE TIME FUNCTIONS AND COMPARTMENTS ARE
     1RELATED AS FOLLOWS*,15X,*V*,16X,A1)
   66 FORMAT(5X,A1,4X,25(*.*),65X,25(*.*),4X,A1)
   68 FORMAT(5X,A1,4X,*.*,23X,*.*,65X,*.*,23X,*.*,4X,A1)
   70 FORMAT(5X,A1,4X,*.*,23X,*.*,12X,*(T1,T2,T3,T4)  =  (Q1,Q2,Q3,Q4,Q5
     1,Q6,Q7)W*,12X,*.*,23X,*.*,4X,A1)
   72 FORMAT(5X,A1,4X,*.*,11X,*Q3*,10X,*.*,65X,*.*,11X,*Q6*,10X,*.*,4X,A
     11)
   74 FORMAT(5X,A1,4X,*.*,5X,*TUBULAR CELLS*,5X,*.*,65X,*.*,5X,*TUBULAR
     1CELLS*,5X,*.*,4X,A1)
   76 FORMAT(5X,A1,4X,*.*,23X,*.*,7X,*WHERE*,53X,*.*,23X,*.*,4X,A1)
   78 FORMAT(5X,A1,4X,*.*,11X,*Q4*,10X,*.*,1X,*TIME DELAY =*,39X,*TIME D
     1ELAY =*,1X,*.*,11X,*Q7*,10X,*.*,4X,A1)
```

```
 80 FORMAT(5X,5H****>,*.*,5X,*KIDNEY ESTUARY*,4X,*.*,F7.4,48X,F7.4,3X,
   1*.*,5X,*KIDNEY ESTUARY*,4X,*.*,5H<****)
 82 FORMAT(10X,*.*,5X,*KIDNEY ESTUARY*,4X,*.*,F7.4,48X,F7.4,3X,*.*,5X,
   1*KIDNEY ESTUARY*,4X,*.*)
 84 FORMAT(10X,*.*,23X,*.*,65X,*.*,23X,*.*)
 86 FORMAT(10X,25(*.*),65X,25(*.*))
 88 FORMAT(22X,1H*,89X,1H*)
 90 FORMAT(22X,1H*,32X,25(*.*),32X,1H*)
 92 FORMAT(22X,1H*,32X,*.*,23X,*.*,32X,1H*)
 94 FORMAT(22X,1H*,32X,*.*,11X,*Q5*,10X,*.*,32X,1H*)
 96 FORMAT(22X,32(1H*),*>.*,8X,*BLADDER*,8X,*.<*,32(1H*))
 98 FORMAT(55X,*.*,23X,*.*)
100 FORMAT(55X,25(*.*))
    END
```

```
      SUBROUTINE INV (B,IB,M,Z)
C
C           THE SUBROUTINE INV GIVES THE INVERSE OF A MATRIX B IF IB=1
C                AND GIVES THE SOLUTION OF A SYSTEM OF LINEAR EQUATIONS
C                WITH COEFFICIENT MATRIX B AND THE CONSTANT TERMS STORED
C                IN B(I,M+1) IF IB=0.  THE ALGORITHM IS BASED ON
C                GAUSSIAN ELIMINATION AND IS DESCRIBED IN -  INTRODUC-
C                TORY COMPUTER METHODS AND NUMERICAL ANALYSIS - BY
C                PENNINGTON.
C
C            B  - MATRIX
C            IB = 1  THE INVERSE MATRIX IS RETURNED AND STORED IN
C                      COLUMNS M+1 TO 2*M OF THE MATRIX B.
C               = 0  THE SOLUTION OF A SYSTEM OF LINEAR EQUATIONS WITH
C                      COEFFICIENT MATRIX B IS RETURNED AS Z.
C            M  - THE DIMENSION OF THE MATRIX M
C            Z  - THE SOLUTIONS TO THE SYSTEM OF LINEAR EQUATIONS
C
      DIMENSION B(32,64),Z(32),L(32)
      K=1
      MM=M+1
      IF (IB) 10,16,10
   10 M2=2*M
      DO 12 I=1,M
      DO 12 J=MM,M2
      B(I,J)=0.
   12 CONTINUE
      DO 14 I=1,M
      MI=M+I
      B(I,MI)=1.
      L(I)=I
   14 CONTINUE
      GO TO 20
   16 M2=M+1
      DO 18 I=1,M
      L(I)=I
   18 CONTINUE
   20 KK=K+1
      IS=K
      IT=K
      A=ABS(B(K,K))
      DO 24 I=K,M
      DO 24 J=K,M
      IF (ABS(B(I,J))-A) 24,24,22
   22 IS=I
      IT=J
      A=ABS(B(I,J))
   24 CONTINUE
      IF (IS-K) 30,30,26
   26 DO 28 J=K,M2
      C=B(IS,J)
      B(IS,J)=B(K,J)
      B(K,J)=C
   28 CONTINUE
   30 IF (IT-K) 36,36,32
   32 IC=L(K)
      L(K)=L(IT)
      L(IT)=IC
      DO 34 I=1,M
      C=B(I,IT)
      B(I,IT)=B(I,K)
      B(I,K)=C
```

```
   34 CONTINUE
   36 IF (B(K,K)) 38,64,38
   38 DO 40 J=KK,M2
      B(K,J)=B(K,J)/B(K,K)
      DO 40 I=KK,M
      W=B(I,K)*B(K,J)
      B(I,J)=B(I,J)-W
   40 CONTINUE
      K=KK
      IF (K-M) 20,42,64
   42 IF (B(M,M)) 44,64,44
   44 IF (IB) 46,58,46
   46 DO 48 J=MM,M2
      B(M,J)=B(M,J)/B(M,M)
   48 CONTINUE
      M1=M-1
      DO 50 IX=1,M1
      I=M-IX
      I1=I+1
      DO 50 K=I1,M
      DO 50 J=MM,M2
      B(I,J)=B(I,J)-B(I,K)*B(K,J)
   50 CONTINUE
      DO 56 I=1,M1
      MI=M-I
      DO 56 J=1,MI
      IF (L(J+1)-L(J)) 52,56,56
   52 IC=L(J)
      L(J)=L(J+1)
      L(J+1)=IC
      DO 54 K=MM,M2
      C=B(J,K)
      B(J,K)=B(J+1,K)
      B(J+1,K)=C
   54 CONTINUE
   56 CONTINUE
      IF (IB) 66,58,66
   58 LM=L(M)
      Z(LM)=B(M,M+1)/B(M,M)
      M1=M-1
      DO 62 I=1,M1
      S=0.
      J1=M-I+1
      MI=M-I
      DO 60 J=J1,M
      LJ=L(J)
      S=S+B(MI,J)*Z(LJ)
   60 CONTINUE
      LM=L(MI)
      Z(LM)=B(MI,M+1)-S
   62 CONTINUE
      GO TO 66
   64 PRINT 68
      CALL EXIT
   66 RETURN
C
C
   68 FORMAT(*THE MATRIX IS SINGULAR*)
      END
```

```
      SUBROUTINE INVPD (B,IB,M,Z)
C
C           THE SUBROUTINE INVPD GIVES THE INVERSE FOR A POSITIVE
C                SEMIDEFINITE MATRIX B IF IB=1 AND GIVES THE SOLUTION
C                OF A SYSTEM OF LINEAR EQUATIONS WITH COEFFICIENT
C                MATRIX B AND THE CONSTANT TERMS STORED IN B(I,M+1)
C                IF IB=0.  THE ALGORITHM IS DUE TO CHOLESKI AND IS
C                DESCRIBED ON PAGE 452 IN - A FIRST COURSE IN NUMERICAL
C                ANALYSIS - BY RALSTON.
C
C            B  - MATRIX
C            IB = 1  THE INVERSE MATRIX IS RETURNED AND STORED IN
C                      COLUMNS 1 TO M OF THE MATRIX B.
C               = 0  THE SOLUTION OF A SYSTEM OF LINEAR EQUATIONS WITH
C                      COEFFICIENT MATRIX B IS RETURNED AS Z.
C            M  - THE DIMENSION OF THE MATRIX B
C            Z  - THE SOLUTION TO THE SYSTEM OF LINEAR EQUATIONS
C
      DIMENSION B(32,64),Z(32),L(32),Y(32)
      DOUBLE PRECISION SA,SB
      MM=M+1
      M2=2*M
      M1=M-1
      K=1
      DO 10 I=1,M
      L(I)=I
   10 CONTINUE
   12 KK=K+1
      IS=K
      IT=K
      A=B(K,K)
      DO 16 I=K,M
      DO 16 J=K,M
      IF (B(I,J)-A) 16,16,14
   14 IS=I
      IT=J
      A=B(I,J)
   16 CONTINUE
      IF (IS-K) 22,22,18
   18 DO 20 J=1,M
      C=B(IS,J)
      B(IS,J)=B(K,J)
      B(K,J)=C
   20 CONTINUE
   22 IF (IT-K) 28,28,24
   24 IC=L(K)
      L(K)=L(IT)
      L(IT)=IC
      DO 26 I=K,M
      C=B(I,IT)
      B(I,IT)=B(I,K)
      B(I,K)=C
   26 CONTINUE
   28 IF (B(K,K)) 30,96,30
   30 IF (K-1) 36,32,36
   32 SA=B(K,K)
      SB=DSQRT(SA)
      B(K,K)=SB
      DO 34 I=2,M
      B(I,K)=B(I,K)/B(K,K)
   34 CONTINUE
      K=KK
```

```
      IF (K-M) 12,50,96
   36 K1=K-1
      SUM=0.
      DO 38 I=1,K1
      SUM=SUM+B(K,I)**2
   38 CONTINUE
      X=B(K,K)-SUM
      IF (X) 40,44,44
   40 PRINT 100, K
      DO 42 I=1,M
      J2=I
      PRINT 102, (B(I,J),J=1,J2)
   42 CONTINUE
      CALL EXIT
   44 SA=X
      SB=DSQRT(SA)
      B(K,K)=SB
      DO 48 I=KK,M
      SUM=0.
      DO 46 J=1,K1
      SUM=SUM+B(I,J)*B(K,J)
   46 CONTINUE
      B(I,K)=(B(I,K)-SUM)/B(K,K)
   48 CONTINUE
      K=KK
      IF (K-M) 12,50,96
   50 IF (B(M,M)) 52,96,52
   52 SUM=0.
      DO 54 I=1,M1
      SUM=SUM+B(M,I)**2
   54 CONTINUE
      X=B(M,M)-SUM
      IF (X) 56,60,60
   56 PRINT 100, K
      DO 58 I=1,M
      J2=I
      PRINT 102, (B(I,J),J=1,J2)
   58 CONTINUE
      CALL EXIT
   60 SA=X
      SB=DSQRT(SA)
      B(M,M)=SB
      IF (IB) 62,86,62
   62 DO 64 I=1,M
      DO 64 J=MM,M2
      B(I,J)=0.
   64 CONTINUE
      DO 66 I=1,M
      MI=M+I
      B(I,MI)=1.
   66 CONTINUE
      K=1
      MI=M
   68 KK=K+1
      MI=MI+1
      DO 70 J=MM,MI
      B(K,J)=B(K,J)/B(K,K)
      DO 70 I=KK,M
      W=B(I,K)*B(K,J)
      B(I,J)=B(I,J)-W
   70 CONTINUE
      K=KK
```

```
      IF (K-M) 68,72,96
   72 DO 74 J=MM,M2
      B(M,J)=B(M,J)/B(M,M)
   74 CONTINUE
      DO 76 I=1,M
      DO 76 J=1,M
      B(I,J)=0.
      DO 76 K=1,M
      B(I,J)=B(I,J)+B(K,M+I)*B(K,M+J)
   76 CONTINUE
      DO 84 I=1,M1
      MI=M-I
      DO 84 J=1,MI
      IF (L(J+1)-L(J)) 78,84,84
   78 IC=L(J)
      L(J)=L(J+1)
      L(J+1)=IC
      DO 80 K=1,M
      C=B(J,K)
      B(J,K)=B(J+1,K)
      B(J+1,K)=C
   80 CONTINUE
      DO 82 K=1,M
      C=B(K,J)
      B(K,J)=B(K,J+1)
      B(K,J+1)=C
   82 CONTINUE
   84 CONTINUE
      GO TO 98
   86 LM=L(1)
      Y(1)=B(LM,MM)/B(1,1)
      DO 90 I=2,M
      S=0.
      II=I-1
      DO 88 J=1,II
      S=S+B(I,J)*Y(J)
   88 CONTINUE
      LM=L(I)
      Y(I)=(B(LM,M+1)-S)/B(I,I)
   90 CONTINUE
      LM=L(M)
      Z(LM)=Y(M)/B(M,M)
      DO 94 I=1,M1
      S=0.
      J1=M-I+1
      MI=M-I
      DO 92 J=J1,M
      LJ=L(J)
      S=S+B(J,MI)*Z(LJ)
   92 CONTINUE
      LM=L(MI)
      Z(LM)=(Y(MI)-S)/B(MI,MI)
   94 CONTINUE
      GO TO 98
   96 PRINT 104
      CALL EXIT
   98 RETURN
C
C
  100 FORMAT(1X,*THE MATRIX IS NOT POSITIVE DEFINITE      K = *,I3)
  102 FORMAT(5X,12(E9.2,1X))
  104 FORMAT(1X,*THE MATRIX IS SINGULAR*)
```

END

```
      SUBROUTINE LINMAX (M,Z,XLINMAX,Z1)
C
C           THE SUBROUTINE LINMAX SCALES THE STEP VECTOR Z SO THAT THE
C                ABSOLUTE VALUE OF Z(I) DOES NOT EXCEED XLINMAX(I) FOR
C                ALL I.
C
C            M        - THE NUMBER OF PARAMETERS
C            Z        - THE STEP FOR THE PARAMETERS
C            XLINMAX  - THE ABSOLUTE MAXIMUM STEP
C            Z1       - THE SCALED STEP FOR THE PARAMETERS
C
      DIMENSION Z(32),XLINMAX(32),Z1(32)
      XM=1.
      DO 10 I=1,M
      IF (ABS(Z(I))-XLINMAX(I)) 10,10,12
   10 CONTINUE
      GO TO 18
   12 XM=XLINMAX(1)/ABS(Z(1))
      DO 16 I=2,M
      XX=XLINMAX(I)/ABS(Z(I))
      IF (XM-XX) 16,16,14
   14 XM=XX
   16 CONTINUE
   18 DO 20 I=1,M
      Z1(I)=XM*Z(I)
   20 CONTINUE
      RETURN
      END
```

```
      SUBROUTINE MARQ (A,XLINMAX,CHI,TF,PAR,PARX,IDOUBL,NSTEP,IPRT)
C
C           THE SUBROUTINE MARQ DETERMINES THE MINIMUM TO THE LEAST
C                SQUARES FUNCTION FOR THE KIDNEY COMPARTMENT MODEL.
C                THE ALGORITHM USED TO DETERMINE THE MINIMUM IS DUE
C                TO MARQUARDT AND IS DESCRIBED IN,  AN ALGORITHM FOR
C                LEAST-SQUARES ESTIMATION OF NON LINEAR PARAMETERS,
C                J. SOC. INDUST. APPL. MATH, 11(1963), PP 431-441.
C
C            A        - THE PARAMETERS FOR THE KIDNEY MODEL
C            XLINMAX  - THE MAXIMUM ALLOWED STEP SIZE
C            CHI      - THE CHI-SQUARE SUBROUTINE
C            TF       - THE TIME FUNCTION SUBROUTINE
C            PAR      - THE SUBROUTINE OF PARTIAL DERIVATIVES
C            PARX     - THE SUBROUTINE OF PARTIAL DERIVATIVES FOR THE
C                        TIME FUNCTIONS
C            IDOUBL   - IF IDOUBL IS EQUAL TO 1 THEN THE SUMS ARE
C                        EVALUATED IN DOUBLE PRECISION IN THE SUBROUTINE
C                        PAR.
C            NSTEP    - THE MAXIUM NUMBER OF ITERATIONS
C            IPRT     - IF IPRT=1 THEN PRINT OUT THE PARAMETER VALUES
C                        FOR ALL ITERATIONS
C
C
C           THE MARQUARDT ALGORITHM -
C
C            1. SELECT AN INITIAL SOLUTION A FOR THE KIDNEY COMPARTMENT
C                MODEL AND AN INITIAL VALUE FOR XLAM AND V.
C            2. LET AT=A AND EVALUATE THE LEAST SQUARES FUNCTION HF BY
C               CALL SQSUM(A,HF).
C            3. EVALUATE THE MATRICES B AND E BY CALL PAR(A,B).
C            4. EVALUATE THE MATRICES B* AND E* WHERE
C                  B*(I,J) = B(I,J)/SQRT(B(I,I)*B(J,J))
C                  E*(I)   = E(I)/SQRT(B(I,I)).
C            5. SOLVE FOR Z1* AND Z2* WHERE
C                  Z1* = INV(B* + XLAM1*I) * E*
C                  Z2* = INV(B* + XLAM2*I) * E*
C               AND XLAM1=XLAM AND XLAM2=XLAM/V.
C            6 EVALUATE Z1 AND Z2 WHERE
C                  Z1(I) = Z1*(I)/SQRT(B(I,I))
C                  Z2(I) = Z2*(I)/SQRT(B(I,I)).
C            7. SCALE Z1(I) AND Z2(I) BY CALL LINMAX(M,Z,XLINMAX,Z)
C               SO THAT ABS(Z1(I)) AND ABS(Z2(I)) ≤ XLINMAX(I) FOR ALL I
C               WHERE XLINMAX(I) IS THE MAXIMUM ALLOWED STEP SIZE.
C            8. EVALUATE A1 AND A2 WHERE
C                  A1(I) = A(I)+Z1(I)
C                  A2(I) = A(I)+Z2(I).
C            9. EVALUATE H1=HF(XLAM1) AND H2=HF(XLAM2) BY
C               CALL SQSUM(A1,H1) AND CALL SQSUM(A2,H2) RESPECTIVILY.
C           10. IF HF(XLAM1)≤HF THEN
C                  XLAM = XLAM1
C                  A(I) = A1(I)
C                  Z(I) = Z1(I)
C               GO TO 11, ELSE
C               IF HF(XLAM1)>HF AND HF(XLAM2)<HF THEN
C                  XLAM = XLAM2
C                  A(I) = A2(I)
C                  Z(I) = Z2(I)
C               GO TO 11, ELSE GO TO 12.
C           11. TEST FOR CONVERGENCE (CALL TEST(M,Z,AT,1.,LG)) -
C                  IF ABS(Z(I))/(.001+ABS(AT(I))) < .0001 FOR ALL I
C               THEN STOP, ELSE RETURN TO 2.
```

```
C            12. LET XLAM=V*XLAM.
C            13. EVALUATE Z* WHERE
C                   Z* = INV(B* + XLAM*I) * E*
C            14. EVALUATE Z WHERE
C                   Z(I) = Z*(I)/SQRT(B(I,I)).
C            15. SCALE Z(I) SO THAT ABS(Z(I))≤XLINMAX(I) FOR ALL I.
C            16. EVALUATE A(I) WHERE
C                   A(I) = A(I)+Z(I).
C            17. EVALUATE H3=HF(XLAM).
C            18. IF H3< HF THEN RETURN TO 11 AND CALL TEST
C                ELSE GO TO 12.
C
C
      COMMON/CONST/N,N1,M,M1
      DIMENSION A1(32),A2(32),AT(32),B(32,64),CC(32,64),Z(32),D(32),P(32
     1),Z1(32),Z2(32),XLINMAX(32),A(32)
      LOGICAL LG,TPRINT
      TPRINT=IPRT.EQ.1
      XLAM=.01
      L1=1
      V=10.
   10 IF (TPRINT) GO TO 12
      GO TO 14
   12 PRINT 76, L1
      PRINT 78
      PRINT 80
   14 CALL CHI (A,HF,TF)
      CALL PAR (A,B,PARX,IDOUBL)
      DO 16 I=1,M
      P(I)=-2.*B(I,M+1)
   16 CONTINUE
      DO 18 I=1,M
      D(I)=B(I,I)
   18 CONTINUE
      N2=0
      DO 20 I=1,M
      B(I,M+1)=B(I,M+1)/SQRT(D(I))
      CC(I,M+1)=B(I,M+1)
      N2=N2+1
      DO 20 J=1,N2
      B(I,J)=B(I,J)/SQRT(D(I)*D(J))
      B(J,I)=B(I,J)
      CC(I,J)=B(I,J)
      CC(J,I)=CC(I,J)
   20 CONTINUE
      DO 22 I=1,M
      CC(I,I)=B(I,I)+XLAM
   22 CONTINUE
      CALL INVPD (CC,0,M,Z1)
      DO 24 I=1,M
      Z1(I)=Z1(I)/SQRT(D(I))
   24 CONTINUE
      CALL LINMAX (M,Z1,XLINMAX,Z1)
      DO 26 I=1,M
      A1(I)=A(I)+Z1(I)
      AT(I)=A(I)
   26 CONTINUE
C        ********H1 IS HF(XLAM)********
      CALL CHI (A1,H1,TF)
      IF (TPRINT) PRINT 82, H1,XLAM
      XLAM2=XLAM/V
      N2=0
```

```
      DO 30 I=1,M
      N2=N2+1
      CC(I,M+1)=B(I,M+1)
      DO 28 J=1,N2
      CC(I,J)=B(I,J)
      CC(J,I)=CC(I,J)
   28 CONTINUE
      CC(I,I)=B(I,I)+XLAM2
   30 CONTINUE
      CALL INVPD (CC,0,M,Z2)
      DO 32 I=1,M
      Z2(I)=Z2(I)/SQRT(D(I))
   32 CONTINUE
      CALL LINMAX (M,Z2,XLINMAX,Z2)
      DO 34 I=1,M
      A2(I)=A(I)+Z2(I)
   34 CONTINUE
C        ********H2 IS HF(XLAM/V)********
      CALL CHI (A2,H2,TF)
      IF (TPRINT) PRINT 82, H2,XLAM2
      IF (H1-HF) 36,36,38
   36 IF (H1-H2) 44,44,40
   38 IF (H2-HF) 40,40,48
   40 XLAM=XLAM2
      DO 42 I=1,M
      A(I)=A2(I)
      Z(I)=Z2(I)
   42 CONTINUE
      GO TO 64
   44 DO 46 I=1,M
      A(I)=A1(I)
      Z(I)=Z1(I)
   46 CONTINUE
      GO TO 64
C
C        ********BEGINNING OF SUCCESSIVE CORRECTIONS TO XLAM********
C
   48 K1=1
   50 XLAM=XLAM*V
      N2=0
      DO 54 I=1,M
      N2=N2+1
      CC(I,M+1)=B(I,M+1)
      DO 52 J=1,N2
      CC(I,J)=B(I,J)
      CC(J,I)=CC(I,J)
   52 CONTINUE
      CC(I,I)=B(I,I)+XLAM
   54 CONTINUE
      CALL INVPD (CC,0,M,Z)
      DO 56 I=1,M
      Z(I)=Z(I)/SQRT(D(I))
   56 CONTINUE
      CALL LINMAX (M,Z,XLINMAX,Z)
      DO 58 I=1,M
      A(I)=AT(I)+Z(I)
   58 CONTINUE
      CALL CHI (A,H3,TF)
      IF (TPRINT) PRINT 84, K1,H3,XLAM
      IF (H3-HF) 64,60,60
   60 K1=K1+1
      IF (K1-20) TPRINT=.TRUE.
```

```
      IF (K1-21) 50,62,62
C
C        ********END OF LOOP********
C
   62 PRINT 86
      CALL EXIT
   64 IF (TPRINT) GO TO 66
      GO TO 70
   66 PRINT 78
      PRINT 88
      PRINT 90
      PRINT 92
      DO 68 I=1,M
      PRINT 94, I,AT(I),P(I),Z(I)
   68 CONTINUE
      PRINT 96
   70 CALL TEST (M,Z,AT,1.,LG)
      IF (LG) 74,72
   72 L1=L1+1
      IF (L1.EQ.NSTEP-1) TPRINT=.TRUE.
      IF (L1-NSTEP) 10,10,62
   74 PRINT 98, L1
      RETURN
C
C
   76 FORMAT(1H1,55X,13H***ITERATION ,I3,3H***/)
   78 FORMAT(47X,36(1H*))
   80 FORMAT(47X,1H*,2X,*K1*,5X,*HF(XLAM)*,9X,*XLAM*,4X,1H*)
   82 FORMAT(47X,1H*,6X,F13.4,4X,E9.2,2X,1H*)
   84 FORMAT(47X,1H*,2X,I2,2X,F13.4,4X,E9.2,2X,1H*)
   86 FORMAT(1X,*THE NUMBER OF ITERATIONS EXCEED THE BOUNDS*)
   88 FORMAT(///,36X,53(1H*))
   90 FORMAT(36X,1H*,2X,*I*,3X,*PARAMETER*,6X,*GRADIANT*,4X,*CORRECTION
     1VECTOR*,1X,1H*)
   92 FORMAT(36X,1H*,8X,*A(I)*,27X,*Z(I)*,8X,1H*)
   94 FORMAT(36X,1H*,1X,I2,2X,F11.5,4X,E9.2,7X,F10.5,5X,1H*)
   96 FORMAT(36X,53(1H*))
   98 FORMAT(1X,*THE SOLUTION CONVERGED ON ITERATION *,I3,*.*)
      END
```

```
      SUBROUTINE MATX11 (A)
C
C        THE SUBROUTINE MATX11 PRINTS THE MATRIX W FOR A ONE
C             KIDNEY MODEL.  THE MATRIX W RELATES THE TIME FUNCTIONS
C             TO THE COMPARTMENT EQUATIONS SUCH THAT
C                  (TF1,TF2,TF3) = (Q1,Q2,Q3,Q4,Q5)*W.
C
C        THE TIME FUNCTIONS WITH GLOMERULAR FILTRATION
C
C                  TF1 = Q3 + Q4 + A(10)*(Q1 + Q2)
C                  TF2 =      Q5 + A(11)*(Q1 + Q2)
C                  TF3 =           A(12)*(Q1 + Q2)
C
C        THE TIME FUNCTIONS WITHOUT GLOMERULAR FILTRATION
C
C                  TF1 = Q3 + Q4 + A(9)*(Q1 + Q2)
C                  TF2 =      Q5 + A(10)*(Q1 + Q2)
C                  TF3 =           A(11)*(Q1 + Q2)
C
C                       TF1 - KIDNEY
C                       TF2 - BLADDER
C                       TF3 - BLOOD AND TISSUE
C
C            A - PARAMETERS FOR THE KIDNEY MODEL
C
      COMMON/STAR1/ISTAR,IDIF
      DIMENSION A(32)
      Z=0.
      ZZ=1.
      PRINT 10, ISTAR,A(10-IDIF),A(11-IDIF),A(12-IDIF)
      PRINT 12, ISTAR,A(10-IDIF),A(11-IDIF),A(12-IDIF)
      PRINT 14, ISTAR,A(5-IDIF),ZZ,Z,Z
      PRINT 12, ISTAR,ZZ,Z,Z
      PRINT 16, ISTAR,Z,ZZ,Z
      PRINT 18, ISTAR
      PRINT 20, ISTAR
      RETURN
C
C
   10 FORMAT(5X,A1,16X,1H*,36X,3(F7.4,3X),11X,25(1H*))
   12 FORMAT(5X,A1,16X,1H*,36X,3(F7.4,3X),11X,1H*,23X,1H*)
   14 FORMAT(5X,A1,16X,1H*,F7.4,20X,*W =*,6X,3(F7.4,3X),11X,1H*,4X,*KIDN
     1EY REMOVED*,5X,1H*)
   16 FORMAT(5X,A1,16X,*V*,36X,3(F7.4,3X),11X,25(1H*))
   18 FORMAT(5X,A1,4X,25(*.*))
   20 FORMAT(5X,A1,4X,*.*,23X,*.*)
      END
```

```
      SUBROUTINE MATX21 (A)
C
C        THE SUBROUTINE MATX21 PRINTS THE MATRIX W FOR THE TWO
C             KIDNEY MODEL.  THE MATRIX W RELATES THE TIME FUNCTIONS TO
C             TO THE COMPARTMENT EQUATIONS SUCH THAT
C                  (TF1,TF2,TF3,TF4) = (Q1,Q2,Q3,Q4,Q5,Q6,Q7)*W.
C
C     THE TIME FUNCTIONS WITH GLOMERULAR FILTRATION
C
C                  TF1 = A(15)*(Q3+Q4)+A(16)*Q1+A(17)*Q2+A(18)*Q5
C                  TF2 = A(19)*(Q6+Q7)+A(20)*Q1+A(21)*Q2+A(22)*Q5
C                  TF3 = A(24)*Q1+A(25)*Q2+A(23)*Q5
C                  TF4 = A(26)*Q1+A(27)*Q2+A(28)*Q5+A(29)*(Q3+Q4)
C                              +A(30)*(Q6+Q7)
C
C        THE TIME FUNCTIONS WITHOUT GLOMERULAR FILTRATION
C
C                  TF1 = A(13)*(Q3+Q4)+A(14)*Q1+A(15)*Q2+A(16)*Q5
C                  TF2 = A(17)*(Q6+Q7)+A(18)*Q1+A(19)*Q2+A(20)*Q5
C                  TF3 = A(22)*Q1+A(23)*Q2+A(21)*Q5
C                  TF4 = A(24)*Q1+A(25)*Q2+A(26)*Q5+A(27)*(Q3+Q4)
C                              +A(28)*(Q6+Q7)
C
C                       TF1 - RIGHT KIDNEY
C                       TF2 - LEFT KIDNEY
C                       TF3 - BLADDER
C                       TF4 - BLOOD AND TISSUE
C
C            A - PARAMETERS FOR THE KIDNEY MODEL
C
      DIMENSION A(32)
      COMMON/STAR2/ISTAR,IDIF1,IDIF2
      Z=0.
      ZZ=1.
      PRINT 10, ISTAR,A(16-IDIF2),A(20-IDIF2),A(24-IDIF2),A(26-IDIF2),IS
     1TAR
      PRINT 10, ISTAR,A(17-IDIF2),A(21-IDIF2),A(25-IDIF2),A(27-IDIF2),IS
     1TAR
      PRINT 12, ISTAR,A(5-IDIF1),A(15-IDIF2),Z,Z,A(29-IDIF2),A(8-IDIF2),
     1ISTAR
      PRINT 14, ISTAR,A(15-IDIF2),Z,Z,A(29-IDIF2),ISTAR
      PRINT 16, ISTAR,A(18-IDIF2),A(22-IDIF2),A(23-IDIF2),A(28-IDIF2),IS
     1TAR
      PRINT 18, ISTAR,Z,A(19-IDIF2),Z,A(30-IDIF2),ISTAR
      PRINT 20, ISTAR,Z,A(19-IDIF2),Z,A(30-IDIF2),ISTAR
      RETURN
C
C
   10 FORMAT(5X,A1,16X,1H*,31X,4(F7.4,3X),18X,1H*,16X,A1)
   12 FORMAT(5X,A1,16X,1H*,F7.4,24X,4(F7.4,3X),9X,F7.4,2X,1H*,16X,A1)
   14 FORMAT(5X,A1,16X,1H*,22X,*W =*,6X,4(F7.4,3X),18X,1H*,16X,A1)
   16 FORMAT(5X,A1,16X,*V*,31X,4(F7.4,3X),18X,*V*,16X,A1)
   18 FORMAT(5X,A1,4X,25(*.*),19X,4(F7.4,3X),6X,25(*.*),4X,A1)
   20 FORMAT(5X,A1,4X,*.*,23X,*.*,19X,4(F7.4,3X),6X,*.*,23X,*.*,4X,A1)
      END
```

```
      SUBROUTINE MATX22 (A)
C
C        THE SUBROUTINE MATX22 PRINTS THE MATRIX W FOR THE TWO
C             KIDNEY MODEL.  THE MATRIX W RELATES THE TIME FUNCTIONS TO
C             TO THE COMPARTMENT EQUATIONS SUCH THAT
C                  (TF1,TF2,TF3,TF4) = (Q1,Q2,Q3,Q4,Q5,Q6,Q7)*W.
C
C        THE TIME FUNCTIONS WITH GLOMERULAR FILTRATION
C
C                  TF1 = Q3+Q4+A(15)*(Q1+Q2)+A(16)*Q5
C                  TF2 = Q6+Q7+A(17)*(Q1+Q2)+A(18)*Q5
C                  TF3 = A(19)*Q5+A(20)*(Q1+Q2)
C                  TF4 = A(21)*(Q1+Q2)+A(22)*Q5+A(23)*(Q3+Q4)
C                            +A(24)*(Q6+Q7)
C
C        THE TIME FUNCTION WITHOUT GLOMERULAR FILTRATION
C
C                  TF1 = Q3+Q4+A(13)*(Q1+Q2)+A(14)*Q5
C                  TF2 = Q6+Q7+A(15)*(Q1+Q2)+A(16)*Q5
C                  TF3 = A(17)*Q5+A(18)*(Q1+Q2)
C                  TF4 = A(19)*(Q1+Q2)+A(20)*Q5+A(21)*(Q3+Q4)
C                            +A(22)*(Q6+Q7)
C
C                       TF1 - RIGHT KIDNEY
C                       TF2 - LEFT KIDNEY
C                       TF3 - BLADDER
C                       TF4 - BLOOD AND TISSUE
C
C             A - PARAMETERS FOR THE KIDNEY MODEL
C
      COMMON/STAR2/ISTAR,IDIF1,IDIF2
      DIMENSION A(32)
      Z=0.
      ZZ=1.
      PRINT 10, ISTAR,A(15-IDIF2),A(17-IDIF2),A(20-IDIF2),A(21-IDIF2),IS
     1TAR
      PRINT 10, ISTAR,A(15-IDIF2),A(17-IDIF2),A(20-IDIF2),A(21-IDIF2),IS
     1TAR
      PRINT 12, ISTAR,A(5-IDIF1),ZZ,Z,Z,A(23-IDIF2),A(8-IDIF2),ISTAR
      PRINT 14, ISTAR,ZZ,Z,Z,A(23-IDIF2),ISTAR
      PRINT 16, ISTAR,A(16-IDIF2),A(18-IDIF2),A(19-IDIF2),A(22-IDIF2),IS
     1TAR
      PRINT 18, ISTAR,Z,ZZ,Z,A(24-IDIF2),ISTAR
      PRINT 20, ISTAR,Z,ZZ,Z,A(24-IDIF2),ISTAR
      RETURN
C
C
   10 FORMAT(5X,A1,16X,1H*,31X,4(F7.4,3X),18X,1H*,16X,A1)
   12 FORMAT(5X,A1,16X,1H*,F7.4,24X,4(F7.4,3X),9X,F7.4,2X,1H*,16X,A1)
   14 FORMAT(5X,A1,16X,1H*,22X,*W =*,6X,4(F7.4,3X),18X,1H*,16X,A1)
   16 FORMAT(5X,A1,16X,*V*,31X,4(F7.4,3X),18X,*V*,16X,A1)
   18 FORMAT(5X,A1,4X,25(*.*),19X,4(F7.4,3X),6X,25(*.*),4X,A1)
   20 FORMAT(5X,A1,4X,*.*,23X,*.*,19X,4(F7.4,3X),6X,*.*,23X,*.*,4X,A1)
      END
```

```
      SUBROUTINE MATX23 (A)
C
C        THE SUBROUTINE MATX23 PRINTS THE MATRIX W FOR THE TWO
C             KIDNEY MODEL.  THE MATRIX W RELATES THE TIME FUNCTIONS TO
C             TO THE COMPARTMENT EQUATIONS SUCH THAT
C                  (T1,T2,T3,T4) = (Q1,Q2,Q3,Q4,Q5,Q6,Q7)*W.
C
C        THE TIME FUNCTIONS WITH GLOMERULAR FILTRATION
C
C                  TF1 = A(15)*Q3+A(16)*Q4+A(17)*(Q1+Q2)+A(18)*Q5
C                  TF2 = A(19)*Q6+A(20)*Q7+A(21)*(Q1+Q2)+A(22)*Q5
C                  TF3 = A(23)*Q5+A(24)*(Q1+Q2)
C                  TF4 = A(25)*(Q1+Q2)+A(26)*Q5+A(27)*Q3+A(28)*Q4
C                             +A(29)*Q6+A(30)*Q7
C
C        THE TIME FUNCTIONS WITHOUT GLOMERULAR FILTRATION
C
C                  TF1 = A(13)*Q3+A(14)*Q4+A(15)*(Q1+Q2)+A(16)*Q5
C                  TF2 = A(17)*Q6+A(18)*Q7+A(19)*(Q1+Q2)+A(20)*Q5
C                  TF3 = A(21)*Q5+A(22)*(Q1+Q2)
C                  TF4 = A(23)*(Q1+Q2)+A(24)*Q5+A(25)*Q3+A(26)*Q4
C                             +A(27)*Q6+A(28)*Q7
C
C                       TF1 - RIGHT KIDNEY
C                       TF2 - LEFT KIDNEY
C                       TF3 - BLADDER
C                       TF4 - BLOOD AND TISSUE
C
C             A - PARAMETERS FOR THE KIDNEY MODEL
C
      COMMON/STAR2/ISTAR,IDIF1,IDIF2
      DIMENSION A(32)
      Z=0.
      ZZ=1.
      PRINT 10, ISTAR,A(17-IDIF2),A(21-IDIF2),A(24-IDIF2),A(25-IDIF2),IS
     1TAR
      PRINT 10, ISTAR,A(17-IDIF2),A(21-IDIF2),A(24-IDIF2),A(25-IDIF2),IS
     1TAR
      PRINT 12, ISTAR,A(5-IDIF1),A(15-IDIF2),Z,Z,A(27-IDIF2),A(8-IDIF2),
     1ISTAR
      PRINT 14, ISTAR,A(16-IDIF2),Z,Z,A(28-IDIF2),ISTAR
      PRINT 16, ISTAR,A(18-IDIF2),A(22-IDIF2),A(23-IDIF2),A(26-IDIF2),IS
     1TAR
      PRINT 18, ISTAR,Z,A(19-IDIF2),Z,A(29-IDIF2),ISTAR
      PRINT 20, ISTAR,Z,A(20-IDIF2),Z,A(30-IDIF2),ISTAR
      RETURN
C
C
   10 FORMAT(5X,A1,16X,1H*,31X,4(F7.4,3X),18X,1H*,16X,A1)
   12 FORMAT(5X,A1,16X,1H*,F7.4,24X,4(F7.4,3X),9X,F7.4,2X,1H*,16X,A1)
   14 FORMAT(5X,A1,16X,1H*,22X,*W =*,6X,4(F7.4,3X),18X,1H*,16X,A1)
   16 FORMAT(5X,A1,16X,*V*,31X,4(F7.4,3X),18X,*V*,16X,A1)
   18 FORMAT(5X,A1,4X,25(*.*),19X,4(F7.4,3X),6X,25(*.*),4X,A1)
   20 FORMAT(5X,A1,4X,*.*,23X,*.*,19X,4(F7.4,3X),6X,*.*,23X,*.*,4X,A1)
      END
```

```
      SUBROUTINE MATX24 (A)
C
C        THE SUBROUTINE MATX24 PRINTS THE MATRIX W FOR THE TWO
C             KIDNEY MODEL.  THE MATRIX W RELATES THE TIME FUNCTIONS TO
C             TO THE COMPARTMENT EQUATIONS SUCH THAT
C                  (T1,T2,T3,T4) = (Q1,Q2,Q3,Q4,Q5,Q6,Q7)*W.
C
C        THE TIME FUNCTIONS WITH GLOMERULAR FILTRATION
C
C                  TF1 = A(15)*Q3+A(16)*Q4+A(17)*Q1+A(18)*Q2
C                              +A(19)*Q5
C                  TF2 = A(15)*Q6+A(16)*Q7+A(20)*Q1+A(21)*Q2
C                              +A(22)*Q5
C                  TF3 = A(24)*Q1+A(25)*Q2+A(23)*Q5
C                  TF4 = A(26)*Q1+A(27)*Q2+A(28)*Q5+A(29)*(Q3+Q4)
C                              +A(30)*(Q6+Q7)
C
C        THE TIME FUNCTIONS WITHOUT GLOMERULAR FILTRATION
C
C                  TF1 = A(13)*Q3+A(14)*Q4+A(15)*Q1+A(16)*Q2
C                              +A(17)*Q5
C                  TF2 = A(13)*Q6+A(14)*Q7 A(18)*Q1+A(19)*Q2
C                              +A(20)*Q5
C                  TF3 = A(22)*Q1+A(23)*Q2+A(21)*Q5
C                  TF4 = A(24)*Q1+A(25)*Q2+A(26)*Q5+A(29)*(Q3+Q4)
C                              +A(28)*(Q6+Q7)
C
C                       TF1 - RIGHT KIDNEY
C                       TF2 - LEFT KIDNEY
C                       TF3 - BLADDER
C                       TF4 - BLOOD AND TISSUE
C
C             A - PARAMETERS FOR THE KIDNEY MODEL
C
      COMMON/STAR2/ISTAR,IDIF1,IDIF2
      DIMENSION A(32)
      Z=0.
      ZZ=1.
      PRINT 10, ISTAR,A(17-IDIF2),A(20-IDIF2),A(24-IDIF2),A(26-IDIF2),IS
     1TAR
      PRINT 10, ISTAR,A(18-IDIF2),A(21-IDIF2),A(25-IDIF2),A(27-IDIF2),IS
     1TAR
      PRINT 12, ISTAR,A(5-IDIF1),A(15-IDIF2),Z,Z,A(29-IDIF2),A(8-IDIF2),
     1ISTAR
      PRINT 14, ISTAR,A(16-IDIF2),Z,Z,A(29-IDIF2),ISTAR
      PRINT 16, ISTAR,A(19-IDIF2),A(22-IDIF2),A(23-IDIF2),A(28-IDIF2),IS
     1TAR
      PRINT 18, ISTAR,Z,A(15-IDIF2),Z,A(30-IDIF2),ISTAR
      PRINT 20, ISTAR,Z,A(16-IDIF2),Z,A(30-IDIF2),ISTAR
      RETURN
C
C
   10 FORMAT(5X,A1,16X,1H*,31X,4(F7.4,3X),18X,1H*,16X,A1)
   12 FORMAT(5X,A1,16X,1H*,F7.4,24X,4(F7.4,3X),9X,F7.4,2X,1H*,16X,A1)
   14 FORMAT(5X,A1,16X,1H*,22X,*W =*,6X,4(F7.4,3X),18X,1H*,16X,A1)
   16 FORMAT(5X,A1,16X,*V*,31X,4(F7.4,3X),18X,*V*,16X,A1)
   18 FORMAT(5X,A1,4X,25(*.*),19X,4(F7.4,3X),6X,25(*.*),4X,A1)
   20 FORMAT(5X,A1,4X,*.*,23X,*.*,19X,4(F7.4,3X),6X,*.*,23X,*.*,4X,A1)
      END
```

```
      SUBROUTINE MATX25 (A)
C
C        THE SUBROUTINE MATX25 PRINTS THE MATRIX W FOR THE TWO
C             KIDNEY MODEL.  THE MATRIX W RELATES THE TIME FUNCTIONS TO
C             TO THE COMPARTMENT EQUATIONS SUCH THAT
C                  (T1,T2,T3,T4) = (Q1,Q2,Q3,Q4,Q5,Q6,Q7)*W.
C
C        THE TIME FUNCTIONS WITH GLOMERULAR FILTRATION
C
C                  TF1 = Q3+Q4+A(15)*(Q1+Q2)
C                  TF2 = Q6+Q7+A(16)*(Q1+Q2)
C                  TF3 = Q5+A(17)*(Q1+Q2)
C                  TF4 = A(18)*(Q1+Q2)+A(19)*(Q3+Q4)+A(20)*(Q6+Q7)
C                              +A(21)*Q5
C
C        THE TIME FUNCTIONS WITHOUT GLOMERULAR FILTRATION
C
C                  TF1 = Q3+Q4+A(13)*(Q1+Q2)
C                  TF2 = Q6+Q7+A(14)*(Q1+Q2)
C                  TF3 = Q5+A(15)*(Q1+Q2)
C                  TF4 = A(16)*(Q1+Q2)+A(17)*(Q3+Q4)+A(18)*(Q6+Q7)
C                              +A(19)*Q5
C
C                       TF1 - RIGHT KIDNEY
C                       TF2 - LEFT KIDNEY
C                       TF3 - BLADDER
C                       TF4 - BLOOD AND TISSUE
C
C             A - PARAMETERS FOR THE KIDNEY MODEL
C
      COMMON/STAR2/ISTAR,IDIF1,IDIF2
      DIMENSION A(32)
      Z=0.
      ZZ=1.
      PRINT 10, ISTAR,A(15-IDIF2),A(16-IDIF2),A(17-IDIF2),A(18-IDIF2),IS
     1TAR
      PRINT 10, ISTAR,A(15-IDIF2),A(16-IDIF2),A(17-IDIF2),A(18-IDIF2),IS
     1TAR
      PRINT 12, ISTAR,A(5-IDIF1),ZZ,Z,Z,A(19-IDIF2),A(8-IDIF2),ISTAR
      PRINT 14, ISTAR,ZZ,Z,Z,A(19-IDIF2),ISTAR
      PRINT 16, ISTAR,Z,Z,ZZ,A(21-IDIF2),ISTAR
      PRINT 18, ISTAR,Z,ZZ,Z,A(20-IDIF2),ISTAR
      PRINT 20, ISTAR,Z,ZZ,Z,A(20-IDIF2),ISTAR
      RETURN
C
C
   10 FORMAT(5X,A1,16X,1H*,31X,4(F7.4,3X),18X,1H*,16X,A1)
   12 FORMAT(5X,A1,16X,1H*,F7.4,24X,4(F7.4,3X),9X,F7.4,2X,1H*,16X,A1)
   14 FORMAT(5X,A1,16X,1H*,22X,*W =*,6X,4(F7.4,3X),18X,1H*,16X,A1)
   16 FORMAT(5X,A1,16X,*V*,31X,4(F7.4,3X),18X,*V*,16X,A1)
   18 FORMAT(5X,A1,4X,25(*.*),19X,4(F7.4,3X),6X,25(*.*),4X,A1)
   20 FORMAT(5X,A1,4X,*.*,23X,*.*,19X,4(F7.4,3X),6X,*.*,23X,*.*,4X,A1)
      END
```

```
      SUBROUTINE MATX26 (A)
C
C        THE SUBROUTINE MATX26 PRINTS THE MATRIX W FOR THE TWO
C             KIDNEY MODEL.  THE MATRIX W RELATES THE TIME FUNCTIONS TO
C             TO THE COMPARTMENT EQUATIONS SUCH THAT
C                  (T1,T2,T3,T4) = (Q1,Q2,Q3,Q4,Q5,Q6,Q7)*W.
C
C        THE TIME FUNCTIONS WITH GLOMERULAR FILTRATION
C
C                   TF1 = Q3+A(15)*Q4+A(16)*(Q1+Q2)+A(17)*Q5
C                   TF2 = Q6+A(18)*Q7+A(19)*(Q1+Q2)+A(20)*Q5
C                   TF3 = A(22)*Q5+A(21)*(Q1+Q2)
C                   TF4 = A(23)*(Q1+Q2)+A(24)*Q4+A(25)*Q7+A(26)*Q5
C
C        THE TIME FUNCTIONS WITHOUT GLOMERULAR FILTRATION
C
C                  TF1 = Q3+A(13)*Q4+A(14)*(Q1+Q2)+A(15)*Q5
C                  TF2 = Q6+A(16)*Q7+A(17)*(Q1+Q2)+A(18)*Q5
C                  TF3 = A(20)*Q5+A(19)*(Q1+Q2)
C                  TF4 = A(21)*(Q1+Q2)+A(22)*Q4+A(23)*Q7+A(24)*Q5
C
C                        TF1 - RIGHT KIDNEY
C                        TF2 - LEFT KIDNEY
C                        TF3 - BLADDER
C                        TF4 - BLOOD AND TISSUE
C
C             A - PARAMETERS FOR THE KIDNEY MODEL
C
      COMMON/STAR2/ISTAR,IDIF1,IDIF2
      DIMENSION A(32)
      Z=0.
      ZZ=1.
      PRINT 10, ISTAR,A(16-IDIF2),A(19-IDIF2),A(21-IDIF2),A(23-IDIF2),IS
     1TAR
      PRINT 10, ISTAR,A(16-IDIF2),A(19-IDIF2),A(21-IDIF2),A(23-IDIF2),IS
     1TAR
      PRINT 12, ISTAR,A(5-IDIF1),ZZ,Z,Z,Z,A(8-IDIF2),ISTAR
      PRINT 14, ISTAR,A(15-IDIF2),Z,Z,A(24-IDIF2),ISTAR
      PRINT 16, ISTAR,A(17-IDIF2),A(20-IDIF2),A(22-IDIF2),A(26-IDIF2),IS
     1TAR
      PRINT 18, ISTAR,Z,ZZ,Z,Z,ISTAR
      PRINT 20, ISTAR,Z,A(18-IDIF2),Z,A(25-IDIF2),ISTAR
      RETURN
C
C
   10 FORMAT(5X,A1,16X,1H*,31X,4(F7.4,3X),18X,1H*,16X,A1)
   12 FORMAT(5X,A1,16X,1H*,F7.4,24X,4(F7.4,3X),9X,F7.4,2X,1H*,16X,A1)
   14 FORMAT(5X,A1,16X,1H*,22X,*W =*,6X,4(F7.4,3X),18X,1H*,16X,A1)
   16 FORMAT(5X,A1,16X,*V*,31X,4(F7.4,3X),18X,*V*,16X,A1)
   18 FORMAT(5X,A1,4X,25(*.*),19X,4(F7.4,3X),6X,25(*.*),4X,A1)
   20 FORMAT(5X,A1,4X,*.*,23X,*.*,19X,4(F7.4,3X),6X,*.*,23X,*.*,4X,A1)
      END
```

```
      SUBROUTINE MATX27 (A)
C
C        THE SUBROUTINE MATX27 PRINTS THE MATRIX W FOR THE TWO
C             KIDNEY MODEL.  THE MATRIX W RELATES THE TIME FUNCTIONS TO
C             TO THE COMPARTMENT EQUATIONS SUCH THAT
C                  (T1,T2,T3,T4) = (Q1,Q2,Q3,Q4,Q5,Q6,Q7)*W.
C
C        THE TIME FUNCTIONS WITH GLOMERULAR FILTRATION
C
C                  TF1 = Q3 + Q4 + A(15)*(Q1 + Q2)
C                  TF2 = Q6 + Q7 + A(16)*(Q1 + Q2)
C                  TF3 =      Q5 + A(17)*(Q1 + Q2)
C                  TF4 =           A(18)*(Q1 + Q2)
C
C        THE TIME FUNCTIONS WITHOUT GLOMERULAR FILTRATION
C
C                  TF1 = Q3 + Q4 + A(13)*(Q1 + Q2)
C                  TF2 = Q6 + Q7 + A(14)*(Q1 + Q2)
C                  TF3 =      Q5 + A(15)*(Q1 + Q2)
C                  TF4 =           A(16)*(Q1 + Q2)
C
C                       TF1 - RIGHT KIDNEY
C                       TF2 - LEFT KIDNEY
C                       TF3 - BLADDER
C                       TF4 - BLOOD AND TISSUE
C
C           A - PARAMETERS FOR THE KIDNEY MODEL
C
      COMMON/STAR2/ISTAR,IDIF1,IDIF2
      DIMENSION A(32)
      Z=0.
      ZZ=1.
      PRINT 10, ISTAR,A(15-IDIF2),A(16-IDIF2),A(17-IDIF2),A(18-IDIF2),IS
     1TAR
      PRINT 10, ISTAR,A(15-IDIF2),A(16-IDIF2),A(17-IDIF2),A(18-IDIF2),IS
     1TAR
      PRINT 12, ISTAR,A(5-IDIF1),ZZ,Z,Z,Z,A(8-IDIF2),ISTAR
      PRINT 14, ISTAR,ZZ,Z,Z,Z,ISTAR
      PRINT 16, ISTAR,Z,Z,ZZ,Z,ISTAR
      PRINT 18, ISTAR,Z,ZZ,Z,Z,ISTAR
      PRINT 20, ISTAR,Z,ZZ,Z,Z,ISTAR
      RETURN
C
C
   10 FORMAT(5X,A1,16X,1H*,31X,4(F7.4,3X),18X,1H*,16X,A1)
   12 FORMAT(5X,A1,16X,1H*,F7.4,24X,4(F7.4,3X),9X,F7.4,2X,1H*,16X,A1)
   14 FORMAT(5X,A1,16X,1H*,22X,*W =*,6X,4(F7.4,3X),18X,1H*,16X,A1)
   16 FORMAT(5X,A1,16X,*V*,31X,4(F7.4,3X),18X,*V*,16X,A1)
   18 FORMAT(5X,A1,4X,25(*.*),19X,4(F7.4,3X),6X,25(*.*),4X,A1)
   20 FORMAT(5X,A1,4X,*.*,23X,*.*,19X,4(F7.4,3X),6X,*.*,23X,*.*,4X,A1)
      END
```

```
      SUBROUTINE MATX28 (A)
C
C        THE SUBROUTINE MATX28 PRINTS THE MATRIX W FOR THE TWO
C             KIDNEY MODEL.  THE MATRIX W RELATES THE TIME FUNCTIONS TO
C             TO THE COMPARTMENT EQUATIONS SUCH THAT
C                  (T1,T2,T3,T4) = (Q1,Q2,Q3,Q4,Q5,Q6,Q7)*W.
C
C        THE TIME FUNCTIONS WITH GLOMERULAR FILTRATION
C
C                  TF1 = Q3+Q4+D1*(Q6+Q7)+(A(15)+D1*A(17))*(Q1+Q2)
C                            +(A(16)+D1*A(18))*Q5
C                  TF2 = Q6+Q7+D2*(Q3+Q4)+(A(17)+D2*A(15))*(Q1+Q2)
C                            +(A(18)+D2*A(16))*Q5
C                  TF3 = A(19)*Q5+A(20)*(Q3+Q4)+A(21)*(Q6+Q7)
C                            +A(22)*(Q1+Q2)
C                  TF4 = A(23)*(Q1+Q2)+A(24)*(Q3+Q4)+A(25)*(Q6+Q7)
C                            +A(26)*Q5
C
C        THE TIME FUNCTIONS WITHOUT GLOMERULAR FILTRATION
C
C                  TF1 = Q3+Q4+D1*(Q6+Q7)+(A(13)+D1*A(15))*(Q1+Q2)
C                            +(A(14)+D1*A(16))*Q5
C                  TF2 = Q6+Q7+D2*(Q3+Q4)+(A(15)+D2*A(13))*(Q1+Q2)
C                            +(A(16)+D2*A(14))*Q5
C                  TF3 = A(17)*Q5+A(18)*(Q3+Q4)+A(19)*(Q6+Q7)
C                            +A(20)*(Q1+Q2)
C                  TF4 = A(21)*(Q1+Q2)+A(22)*(Q3+Q4)+A(23)*(Q6+Q7)
C                            +A(24)*Q5
C
C                       TF1 - RIGHT KIDNEY
C                       TF2 - LEFT KIDNEY
C                       TF3 - BLADDER
C                       TF4 - BLOOD AND TISSUE
C
C                 THIS IS THE ADAC MODEL(J. A. DEGRAZIA, P. O. SCHEIBE,
C                 ET AL., CLINICAL APPLICATIONS OF KINETIC MODEL OF
C                 HIPPURATE DISTRIBUTION AND RENAL CLEARANCE, J. NUCL.
C                 MED., 15(1974), PP 102-114).
C
C            A - PARAMETERS FOR THE KIDNEY MODEL
C
      COMMON/STAR2/ISTAR,IDIF1,IDIF2
      DIMENSION A(32)
      DATA D1,D2/.05,.08/
      Z=0.
      ZZ=1.
      Z1=A(15-IDIF2)+D1*A(17-IDIF2)
      Z2=A(16-IDIF2)+D1*A(18-IDIF2)
      Z3=A(17-IDIF2)+D2*A(15-IDIF2)
      Z4=A(18-IDIF2)+D2*A(16-IDIF2)
      PRINT 10, ISTAR,Z1,Z3,A(22-IDIF2),A(23-IDIF2),ISTAR
      PRINT 10, ISTAR,Z1,Z3,A(22-IDIF2),A(23-IDIF2),ISTAR
      PRINT 12, ISTAR,A(5-IDIF1),ZZ,D2,A(20-IDIF2),A(24-IDIF2),A(8-IDIF2
     1),ISTAR
      PRINT 14, ISTAR,ZZ,D2,A(20-IDIF2),A(24-IDIF2),ISTAR
      PRINT 16, ISTAR,Z2,Z4,A(19-IDIF2),A(26-IDIF2),ISTAR
      PRINT 18, ISTAR,D1,ZZ,A(21-IDIF2),A(25-IDIF2),ISTAR
      PRINT 20, ISTAR,D1,ZZ,A(21-IDIF2),A(25-IDIF2),ISTAR
      RETURN
C
C
   10 FORMAT(5X,A1,16X,1H*,31X,4(F7.4,3X),18X,1H*,16X,A1)
```

```
12 FORMAT(5X,A1,16X,1H*,F7.4,24X,4(F7.4,3X),9X,F7.4,2X,1H*,16X,A1)
14 FORMAT(5X,A1,1oX,1H*,22X,*W =*,6X,4(F7.4,3X),18X,1H*,16X,A1)
16 FORMAT(5X,A1,16X,*V*,31X,4(F7.4,3X),18X,*V*,16X,A1)
18 FORMAT(5X,A1,4X,25(*.*),19X,4(F7.4,3X),6X,25(*.*),4X,A1)
20 FORMAT(5X,A1,4X,*.*,23X,*.*,19X,4(F7.4,3X),6X,*.*,23X,*.*,4X,A1)
   END
```

```
      SUBROUTINE PARG1 (A,B,PARX,IDOUBL)
C
C        THE SUBROUTINE PARG1 EVALUATES THE PARTIAL DERIVATIVES OF THE
C              COMPARTMENT EQUATIONS Q1 - Q5 WITH RESPECT TO THE
C           MODEL PARAMETERS A(I) FOR THE ONE KIDNEY MODEL WITH
C           GLOMERULAR FILTRATION.  THE SUBROUTINE RETURNS THE
C              MATRIX B AND E REQUIRED IN THE MARQUARDT ALGORITHM,
C              A = A + INV(B) * E.  THE MATRIX E IS STORED IN THE
C              M+1 COLUMN OF THE MATRIX B WHERE M IS THE NUMBER OF
C           PARAMETERS.
C
C          A       - PARAMETERS FOR THE KIDNEY MODEL
C          B       - THE MATRIX OF PARTIAL DERIVATIVES
C          PARX    - THE SUBROUTINE OF PARTIAL DERIVATIVES FOR THE
C                      TIME FUNCTIONS
C          IDOUBL  - IF IDOUBL IS EQUAL TO 1 THEN THE SUMS ARE
C                      EVALUATED IN DOUBLE PRECISION
C
C
C        *NOTE - THE SUBROUTINE CHIG1 MUST BE CALLED BEFORE PARG1.
C
      COMMON/FNT/T(150),R(600),H(600)
      COMMON/QFN/Q1(150),Q2(150),Q3(150),Q4(150),Q5(150)
      COMMON/CONST/N,N1,M,M1
      COMMON/EXPP/EXP1,EXP2,EXA5,EXA8
      COMMON/ROOT/C(8),P1,P2,PP,S1
      COMMON/QFNP/QP4(14),QP7(14),Q1P(14),Q2P(14),Q3P(14),Q4P(14),
     1            Q5P(14)
      DIMENSION B(32,64),W(32,450),A(32)
      DOUBLE PRECISION SA,SB,SC
      PARP(X1,X2,X3,X4)=(-S1+X1+X2+X3+X4)/S1/2.
      PAPF(AA,BB,CC,DD,PA,PB,PC,PD)=((PA+PB)*(CC+DD)-(AA+BB)*(PC+PD))/(C
     1C+DD)**2
      PQ1(XK,PA,PAA,X)=(X+C(1)*PA*XK)*EXP1+(-X+C(2)*PAA*XK)*EXP2
      PQ2(XK,PC,PD,X)=(X+C(3)*PC*XK)*EXP1+(-X+C(4)*PD*XK)*EXP2
      PQ3(X,F1,CC1,EX,PA,XK,CC2,PAA)=X*((F1*CC1-C(1)*CC1**2*PA)*(EXP1-EX
     1)+C(1)*CC1*PA*XK*EXP1+(-F1*CC2-C(2)*CC2**2*PAA)*(EXP2-EX)+C(2)*CC2
     2*PAA*XK*EXP2)
      PQ35(X,CC1,EX,CC2,XK,A11)=X*(C(1)*CC1*(-CC1*(EXP1-EX)+XK*EX)+C(2)*
     1CC2*(-CC2*(EXP2-EX)+XK*EX))-A11*XK*EX
      PQ4(X,F1,CC1,PA,EX,Y,XK,CC2,PAA,Z)=X*((F1*CC1-C(1)*CC1**2*PA)*((EX
     1P1-1.)/P1-(1.-EX)/Y)+C(1)*CC1*(-PA*(EXP1-1.)/P1**2+XK*PA*EXP1/P1)+
     2(-F1*CC2-C(2)*CC2**2*PAA)*((EXP2-1.)/P2-(1.-EX)/Y)+C(2)*CC2*(-PAA*
     3(EXP2-1.)/P2**2+XK*PAA*EXP2/P2))+Z*((F1/P1-C(1)*PA/P1**2)*(EXP1-1.
     4)+C(1)*XK*PA*EXP1/P1+(-F1/P2-C(2)*PAA/P2**2)*(EXP2-1.)+C(2)*XK*PAA
     5*EXP2/P2)
      FQ3(X,CC1,EX,Y,CC2)=X*(C(1)*CC1*((EXP1-1.)/P1-(1.-EX)/Y)+C(2)*CC2*
     1((EXP2-1.)/P2-(1.-EX)/Y))
      PQ45(X,CC1,EX,Y,CC2,XK,Z)=X*(-C(1)*CC1**2*((EXP1-1.)/P1-(1.-EX)/Y)
     1+(C(1)*CC1+C(2)*CC2)*((1.-EX)/Y**2-XK*EX/Y)-C(2)*CC2**2*((EXP2-1.)
     2/P2-(1.-EX)/Y))+Z*XK*EX
      PQ413(X,CC1,EX,CC2,Y,Z)=-X*(C(1)*CC1*(EX-EXP1)+C(2)*CC2*(EX-EXP2))
     1+Y*EX+Z*(C(1)*EXP1+C(2)*EXP2)
      P1A1=PARP(A(1),A(2),A(3),A(4))
      P1A2=PARP(A(1),A(2),-A(3),-A(4))
      P1A3=PARP(A(1),-A(2),A(3),A(4))
      P1A4=P1A3
      P2A1=PARP(-A(1),-A(2),-A(3),-A(4))
      P2A2=PARP(-A(1),-A(2),A(3),A(4))
      P2A3=PARP(-A(1),A(2),-A(3),-A(4))
      P2A4=P2A3
      AX=-A(6)*(P1+A(2))
```

```
      BX=-A(7)*A(2)
      F1A1=PAPF(AX,BX,P2,-P1,-A(6)*P1A1,0.,P2A1,-P1A1)
      F1A2=PAPF(AX,BX,P2,-P1,-A(6)*(P1A2+1.),-A(7),P2A2,-P1A2)
      F1A3=PAPF(AX,BX,P2,-P1,-A(6)*P1A3,0.,P2A3,-P1A3)
      F1A4=F1A3
      AX=-A(7)*(P1+PP)
      BX=-A(6)*A(1)
      FFA1=PAPF(AX,BX,P2,-P1,-A(7)*(P1A1+1.),-A(6),P2A1,-P1A1)
      FFA2=PAPF(AX,BX,P2,-P1,-A(7)*P1A2,0.,P2A2,-P1A2)
      FFA3=PAPF(AX,BX,P2,-P1,-A(7)*(P1A3+1.),0.,P2A3,-P1A3)
      FFA4=FFA3
      FC=(-P1-A(2))/(P2-P1)
      FD=(P2+A(2))/(P2-P1)
      FE=A(2)/(P2-P1)
      FF=A(1)/(P2-P1)
      FG=(-P1-PP)/(P2-P1)
      FH=(PP+P2)/(P2-P1)
      DO 42 K=1,N
      EXP1=EXP(P1*T(K))
      EXP2=EXP(P2*T(K))
      EXA5=EXP(-A(5)*T(K))
      DO 10 I=1,9
      Q1P(I)=0.
   10 CONTINUE
      Q1P(1)=PQ1(T(K),P1A1,P2A1,F1A1)
      Q1P(2)=PQ1(T(K),P1A2,P2A2,F1A2)
      Q1P(3)=PQ1(T(K),P1A3,P2A3,F1A3)
      Q1P(4)=Q1P(3)
      Q1P(6)=FC*EXP1+FD*EXP2
      Q1P(7)=FE*(EXP2-EXP1)
      DO 12 I=1,9
      Q2P(I)=0.
   12 CONTINUE
      Q2P(1)=PQ2(T(K),P1A1,P2A1,FFA1)
      Q2P(2)=PQ2(T(K),P1A2,P2A2,FFA2)
      Q2P(3)=PQ2(T(K),P1A3,P2A3,FFA3)
      Q2P(4)=Q2P(3)
      Q2P(6)=FF*(EXP2-EXP1)
      Q2P(7)=FG*EXP1+FH*EXP2
      DO 14 I=1,9
      Q3P(I)=0.
   14 CONTINUE
      Q3P(1)=PQ3(A(3),F1A1,C(5),EXA5,P1A1,T(K),C(6),P2A1)
      Q3P(2)=PQ3(A(3),F1A2,C(5),EXA5,P1A2,T(K),C(6),P2A2)
      Q3P(4)=PQ3(A(3),F1A4,C(5),EXA5,P1A4,T(K),C(6),P2A4)
      Q3P(3)=Q3P(4)+C(1)*C(5)*(EXP1-EXA5)+C(2)*C(6)*(EXP2-EXA5)
      Q3P(5)=PQ35(A(3),C(5),EXA5,C(6),T(K),A(8))
      Q3P(6)=A(3)*(FC*C(5)*(EXP1-EXA5)+FD*C(6)*(EXP2-EXA5))
      Q3P(7)=A(3)*FE*(-C(5)*(EXP1-EXA5)+C(6)*(EXP2-EXA5))
      Q3P(8)=EXA5
      DO 16 I=1,9
      Q4P(I)=0.
   16 CONTINUE
      J6=0
      IF (T(K)-A(9)) 18,18,20
   18 X=T(K)
      GO TO 22
   20 X=T(K)-A(9)
   22 EXP1=EXP(P1*X)
      EXP2=EXP(P2*X)
      EXA5=EXP(-A(5)*X)
      Q4P(1)=PQ4(A(3)*A(5),F1A1,C(5),P1A1,EXA5,A(5),X,C(6),P2A1,A(4))-Q4
```

```
     1P(1)
      Q4P(2)=PQ4(A(3)*A(5),F1A2,C(5),P1A2,EXA5,A(5),X,C(6),P2A2,A(4))-Q4
     1P(2)
      Q4P(3)=PQ4(A(3)*A(5),F1A3,C(5),P1A3,EXA5,A(5),X,C(6),P2A3,A(4))+FQ
     13(A(5),C(5),EXA5,A(5),C(6))-Q4P(3)
      Q4P(4)=PQ4(A(3)*A(5),F1A4,C(5),P1A4,EXA5,A(5),X,C(6),P2A4,A(4))+C(
     11)*(EXP1-1.)/P1+C(2)*(EXP2-1.)/P2-Q4P(4)
      Q4P(5)=FQ3(A(3),C(5),EXA5,A(5),C(6))+PQ45(A(3)*A(5),C(5),EXA5,A(5)
     1,C(6),X,A(8))-Q4P(5)
      Q4P(6)=A(3)*A(5)*(FC*C(5)*((EXP1-1.)/P1-(1.-EXA5)/A(5))+FD*C(6)*((
     1EXP2-1.)/P2-(1.-EXA5)/A(5)))+A(4)*(FC*(EXP1-1.)/P1+FD*(EXP2-1.)/P2
     2)-Q4P(6)
      Q4P(7)=A(3)*A(5)*FE*(-C(5)*((EXP1-1.)/P1-(1.-EXA5)/A(5))+C(6)*((EX
     1P2-1.)/P2-(1.-EXA5)/A(5)))+A(4)*FE*((1.-EXP1)/P1+(EXP2-1.)/P2)-Q4P
     2(7)
      Q4P(8)=1.-EXA5-Q4P(8)
      IF (J6) 24,24,30
   24 IF (T(K)-A(9)) 30,30,26
   26 Q4P(9)=PQ413(A(3)*A(5),C(5),EXA5,C(6),A(5)*A(8),A(4))
      DO 28 I=1,9
      QP4(I)=Q4P(I)
   28 CONTINUE
      QP4(9)=-Q4P(9)
      X=T(K)
      J6=1
      GO TO 22
   30 IF (T(K)-A(9)) 36,36,32
   32 DO 34 I=1,9
      Q5P(I)=QP4(I)
   34 CONTINUE
      GO TO 40
   36 DO 38 I=1,9
      Q5P(I)=0.
   38 CONTINUE
   40 CALL PARX (A,W,K)
   42 CONTINUE
      IF (IDOUBL.EQ.1) GO TO 48
      N2=0
      DO 44 I=1,M
      N2=N2+1
      DO 44 J=1,N2
      B(I,J)=0.
      DO 44 N3=1,N1
      DO 44 K=1,N
      N6=K+N*(N3-1)
      B(I,J)=B(I,J)+W(I,N6)*W(J,N6)/R(N6)
      B(J,I)=B(I,J)
   44 CONTINUE
      DO 46 I=1,M
      B(I,M+1)=0.
      DO 46 N3=1,N1
      DO 46 K=1,N
      N6=K+N*(N3-1)
      B(I,M+1)=B(I,M+1)+(R(N6)-H(N6))*W(I,N6)/R(N6)
   46 CONTINUE
      RETURN
C
   48 N2=0
      DO 52 I=1,M
      N2=N2+1
      DO 52 J=1,N2
      SC=0.
```

```
      DO 50 N3=1,N1
      DO 50 K=1,N
      N6=K+N*(N3-1)
      SA=W(I,N6)
      SB=W(J,N6)
      SC=SC+(SA*SB)/R(N6)
   50 CONTINUE
      B(I,J)=SC
      B(J,I)=SC
   52 CONTINUE
      DO 56 I=1,M
      SC=0.
      DO 54 N3=1,N1
      DO 54 K=1,N
      N6=K+N*(N3-1)
      SA=R(N6)-H(N6)
      SB=W(I,N6)
      SC=SC+(SA*SB)/R(N6)
   54 CONTINUE
      B(I,M+1)=SC
   56 CONTINUE
      RETURN
      END
```

```
      SUBROUTINE PARG2 (A,B,PARX,IDOUBL)
C
C        THE SUBROUTINE PARG2 EVALUATES THE PARTIAL DERIVATIVES OF THE
C              COMPARTMENT EQUATIONS Q1 - Q7 WITH RESPECT TO THE
C           MODEL PARAMETERS A(I) FOR THE TWO KIDNEY MODEL WITH
C           GLOMERULAR FILTRATION.  THE SUBROUTINE RETURNS THE
C              MATRIX B AND E REQUIRED IN THE MARQUARDT ALGORITHM,
C              A = A + INV(B) * E.  THE MATRIX E IS STORED IN THE
C              M+1 COLUMN OF THE MATRIX B WHERE M IS THE NUMBER OF
C              PARAMETERS.
C
C         A       - PARAMETERS FOR THE KIDNEY MODEL
C         B       - THE MATRIX OF PARTIAL DERIVATIVES
C         PARX    - THE SUBROUTINE OF PARTIAL DERIVATIVES FOR THE
C                     TIME FUNCTIONS
C         IDOUBL  - IF IDOUBL IS EQUAL TO 1 THEN THE SUMS ARE
C                     EVALUATED IN DOUBLE PRECISION
C
C        *NOTE - THE SUBROUTINE CHIG2 MUST BE CALLED BEFORE PARG2.
C
      COMMON/FNT/T(150),R(600),H(600)
      COMMON/QFN/Q1(150),Q2(150),Q3(150),Q4(150),Q5(150),Q6(150),Q7(150)
      COMMON/CONST/N,N1,M,M1
      COMMON/EXPP/EXP1,EXP2,EXA5,EXA8
      COMMON/ROOT/C(8),P1,P2,PP,S1
      COMMON/QFNP/QP4(14),QP7(14),Q1P(14),Q2P(14),Q3P(14),Q4P(14),
     1            Q5P(14),Q6P(14),Q7P(14)
      DIMENSION B(32,64),W(32,600),A(32)
      DOUBLE PRECISION SA,SB,SC
      PARP(X1,X2,X3,X4,X6,X7)=(-S1+X1+X2+X3+X4+X6+X7)/S1/2.
      PAPF(AA,BB,CC,DD,PA,PB,PC,PD)=((PA+PB)*(CC+DD)-(AA+BB)*(PC+PD))/(C
     1C+DD)**2
      PQ1(XK,PA,PAA,X)=(X+C(1)*PA*XK)*EXP1+(-X+C(2)*PAA*XK)*EXP2
      PQ2(XK,PC,PD,X)=(X+C(3)*PC*XK)*EXP1+(-X+C(4)*PD*XK)*EXP2
      PQ3(X,F1,CC1,EX,PA,XK,CC2,PAA)=X*((F1*CC1-C(1)*CC1**2*PA)*(EXP1-EX
     1)+C(1)*CC1*PA*XK*EXP1+(-F1*CC2-C(2)*CC2**2*PAA)*(EXP2-EX)+C(2)*CC2
     2*PAA*XK*EXP2)
      PQ35(X,CC1,EX,CC2,XK,A11)=X*(C(1)*CC1*(-CC1*(EXP1-EX)+XK*EX)+C(2)*
     1CC2*(-CC2*(EXP2-EX)+XK*EX))-A11*XK*EX
      PQ4(X,F1,CC1,PA,EX,Y,XK,CC2,PAA,Z)=X*((F1*CC1-C(1)*CC1**2*PA)*((EX
     1P1-1.)/P1-(1.-EX)/Y)+C(1)*CC1*(-PA*(EXP1-1.)/P1**2+XK*PA*EXP1/P1)+
     2(-F1*CC2-C(2)*CC2**2*PAA)*((EXP2-1.)/P2-(1.-EX)/Y)+C(2)*CC2*(-PAA*
     3(EXP2-1.)/P2**2+XK*PAA*EXP2/P2))+Z*((F1/P1-C(1)*PA/P1**2)*(EXP1-1.
     4)+C(1)*XK*PA*EXP1/P1+(-F1/P2-C(2)*PAA/P2**2)*(EXP2-1.)+C(2)*XK*PAA
     5*EXP2/P2)
      FQ3(X,CC1,EX,Y,CC2)=X*(C(1)*CC1*((EXP1-1.)/P1-(1.-EX)/Y)+C(2)*CC2*
     1((EXP2-1.)/P2-(1.-EX)/Y))
      PQ45(X,CC1,EX,Y,CC2,XK,Z)=X*(-C(1)*CC1**2*((EXP1-1.)/P1-(1.-EX)/Y)
     1+(C(1)*CC1+C(2)*CC2)*((1.-EX)/Y**2-XK*EX/Y)-C(2)*CC2**2*((EXP2-1.)
     2/P2-(1.-EX)/Y))+Z*XK*EX
      PQ413(X,CC1,EX,CC2,Y,Z)=-X*(C(1)*CC1*(EX-EXP1)+C(2)*CC2*(EX-EXP2))
     1+Y*EX+Z*(C(1)*EXP1+C(2)*EXP2)
      P1A1=PARP(A(1),A(2),A(3),A(4),A(6),A(7))
      P1A2=PARP(A(1),A(2),-A(3),-A(4),-A(6),-A(7))
      P1A3=PARP(A(1),-A(2),A(3),A(4),A(6),A(7))
      P1A4=P1A3
      P1A6=P1A3
      P1A7=P1A3
      P2A1=PARP(-A(1),-A(2),-A(3),-A(4),-A(6),-A(7))
      P2A2=PARP(-A(1),-A(2),A(3),A(4),A(6),A(7))
      P2A3=PARP(-A(1),A(2),-A(3),-A(4),-A(6),-A(7))
      P2A4=P2A3
```

```
      P2A6=P2A3
      P2A7=P2A3
      AX=-A(9)*(P1+A(2))
      BX=-A(10)*A(2)
      F1A1=PAPF(AX,BX,P2,-P1,-A(9)*P1A1,0.,P2A1,-P1A1)
      F1A2=PAPF(AX,BX,P2,-P1,-A(9)*(P1A2+1.),-A(10),P2A2,-P1A2)
      F1A3=PAPF(AX,BX,P2,-P1,-A(9)*P1A3,0.,P2A3,-P1A3)
      F1A4=F1A3
      F1A6=F1A3
      F1A7=F1A3
      AX=-A(10)*(P1+PP)
      BX=-A(9)*A(1)
      FFA1=PAPF(AX,BX,P2,-P1,-A(10)*(P1A1+1.),-A(9),P2A1,-P1A1)
      FFA2=PAPF(AX,BX,P2,-P1,-A(10)*P1A2,0.,P2A2,-P1A2)
      FFA3=PAPF(AX,BX,P2,-P1,-A(10)*(P1A3+1.),0.,P2A3,-P1A3)
      FFA4=FFA3
      FFA6=FFA3
      FFA7=FFA3
      FC=(-P1-A(2))/(P2-P1)
      FD=(P2+A(2))/(P2-P1)
      FE=A(2)/(P2-P1)
      FF=A(1)/(P2-P1)
      FG=(-P1-PP)/(P2-P1)
      FH=(PP+P2)/(P2-P1)
      DO 72 K=1,N
      EXP1=EXP(P1*T(K))
      EXP2=EXP(P2*T(K))
      EXA5=EXP(-A(5)*T(K))
      EXA8=EXP(-A(8)*T(K))
      DO 10 I=1,14
      Q1P(I)=0.
   10 CONTINUE
      Q1P(1)=PQ1(T(K),P1A1,P2A1,F1A1)
      Q1P(2)=PQ1(T(K),P1A2,P2A2,F1A2)
      Q1P(3)=PQ1(T(K),P1A3,P2A3,F1A3)
      Q1P(4)=Q1P(3)
      Q1P(6)=Q1P(3)
      Q1P(7)=Q1P(3)
      Q1P(9)=FC*EXP1+FD*EXP2
      Q1P(10)=FE*(EXP2-EXP1)
      DO 12 I=1,14
      Q2P(I)=0.
   12 CONTINUE
      Q2P(1)=PQ2(T(K),P1A1,P2A1,FFA1)
      Q2P(2)=PQ2(T(K),P1A2,P2A2,FFA2)
      Q2P(3)=PQ2(T(K),P1A3,P2A3,FFA3)
      Q2P(4)=Q2P(3)
      Q2P(6)=Q2P(3)
      Q2P(7)=Q2P(3)
      Q2P(9)=FF*(EXP2-EXP1)
      Q2P(10)=FG*EXP1+FH*EXP2
      DO 14 I=1,14
      Q3P(I)=0.
   14 CONTINUE
      Q3P(1)=PQ3(A(3),F1A1,C(5),EXA5,P1A1,T(K),C(6),P2A1)
      Q3P(2)=PQ3(A(3),F1A2,C(5),EXA5,P1A2,T(K),C(6),P2A2)
      Q3P(4)=PQ3(A(3),F1A4,C(5),EXA5,P1A4,T(K),C(6),P2A4)
      Q3P(3)=Q3P(4)+C(1)*C(5)*(EXP1-EXA5)+C(2)*C(6)*(EXP2-EXA5)
      Q3P(6)=Q3P(4)
      Q3P(7)=Q3P(4)
      Q3P(5)=PQ35(A(3),C(5),EXA5,C(6),T(K),A(11))
      Q3P(9)=A(3)*(FC*C(5)*(EXP1-EXA5)+FD*C(6)*(EXP2-EXA5))
```

```
      Q3P(10)=A(3)*FE*(-C(5)*(EXP1-EXA5)+C(6)*(EXP2-EXA5))
      Q3P(11)=EXA5
      DO 16 I=1,14
      Q6P(I)=0.
   16 CONTINUE
      Q6P(1)=PQ3(A(6),F1A1,C(7),EXA8,P1A1,T(K),C(8),P2A1)
      Q6P(2)=PQ3(A(6),F1A2,C(7),EXA8,P1A2,T(K),C(8),P2A2)
      Q6P(3)=PQ3(A(6),F1A3,C(7),EXA8,P1A3,T(K),C(8),P2A3)
      Q6P(4)=Q6P(3)
      Q6P(6)=Q6P(3)+C(1)*C(7)*(EXP1-EXA8)+C(2)*C(8)*(EXP2-EXA8)
      Q6P(7)=Q6P(3)
      Q6P(8)=PQ35(A(6),C(7),EXA8,C(8),T(K),A(12))
      Q6P(9)=A(6)*(FC*C(7)*(EXP1-EXA8)+FD*C(8)*(EXP2-EXA8))
      Q6P(10)=A(6)*FE*(-C(7)*(EXP1-EXA8)+C(8)*(EXP2-EXA8))
      Q6P(12)=EXA8
      DO 18 I=1,14
      Q4P(I)=0.
   18 CONTINUE
      J6=0
      IF (T(K)-A(13)) 20,20,22
   20 X=T(K)
      GO TO 24
   22 X=T(K)-A(13)
   24 EXP1=EXP(P1*X)
      EXP2=EXP(P2*X)
      EXA5=EXP(-A(5)*X)
      Q4P(1)=PQ4(A(3)*A(5),F1A1,C(5),P1A1,EXA5,A(5),X,C(6),P2A1,A(4))-Q4
     1P(1)
      Q4P(2)=PQ4(A(3)*A(5),F1A2,C(5),P1A2,EXA5,A(5),X,C(6),P2A2,A(4))-Q4
     1P(2)
      Q4P(3)=PQ4(A(3)*A(5),F1A3,C(5),P1A3,EXA5,A(5),X,C(6),P2A3,A(4))+FQ
     13(A(5),C(5),EXA5,A(5),C(6))-Q4P(3)
      Q4P(4)=PQ4(A(3)*A(5),F1A4,C(5),P1A4,EXA5,A(5),X,C(6),P2A4,A(4))+C(
     11)*(EXP1-1.)/P1+C(2)*(EXP2-1.)/P2-Q4P(4)
      Q4P(5)=FQ3(A(3),C(5),EXA5,A(5),C(6))+PQ45(A(3)*A(5),C(5),EXA5,A(5)
     1,C(6),X,A(11))-Q4P(5)
      Q4P(6)=PQ4(A(3)*A(5),F1A6,C(5),P1A6,EXA5,A(5),X,C(6),P2A6,A(4))-Q4
     1P(6)
      Q4P(7)=Q4P(6)
      Q4P(9)=A(3)*A(5)*(FC*C(5)*((EXP1-1.)/P1-(1.-EXA5)/A(5))+FD*C(6)*((
     1EXP2-1.)/P2-(1.-EXA5)/A(5)))+A(4)*(FC*(EXP1-1.)/P1+FD*(EXP2-1.)/P2
     2)-Q4P(9)
      Q4P(10)=A(3)*A(5)*FE*(-C(5)*((EXP1-1.)/P1-(1.-EXA5)/A(5))+C(6)*((E
     1XP2-1.)/P2-(1.-EXA5)/A(5)))+A(4)*FE*((1.-EXP1)/P1+(EXP2-1.)/P2)-Q4
     2P(10)
      Q4P(11)=1.-EXA5-Q4P(11)
      IF (J6) 26,26,32
   26 IF (T(K)-A(13)) 32,32,28
   28 Q4P(13)=PQ413(A(3)*A(5),C(5),EXA5,C(6),A(5)*A(11),A(4))
      DO 30 I=1,14
      QP4(I)=Q4P(I)
   30 CONTINUE
      QP4(13)=-Q4P(13)
      X=T(K)
      J6=1
      GO TO 24
   32 DO 34 I=1,14
      Q7P(I)=0.
   34 CONTINUE
      J6=0
      IF (T(K)-A(14)) 36,36,38
   36 X=T(K)
```

```
      GO TO 40
   38 X=T(K)-A(14)
   40 EXP1=EXP(P1*X)
      EXP2=EXP(P2*X)
      EXA8=EXP(-A(8)*X)
      Q7P(1)=PQ4(A(6)*A(8),F1A1,C(7),P1A1,EXA8,A(8),X,C(8),P2A1,A(7))-Q7
     1P(1)
      Q7P(2)=PQ4(A(6)*A(8),F1A2,C(7),P1A2,EXA8,A(8),X,C(8),P2A2,A(7))-Q7
     1P(2)
      Q7P(3)=PQ4(A(6)*A(8),F1A3,C(7),P1A3,EXA8,A(8),X,C(8),P2A3,A(7))-Q7
     1P(3)
      Q7P(4)=Q7P(3)
      Q7P(6)=PQ4(A(6)*A(8),F1A6,C(7),P1A6,EXA8,A(8),X,C(8),P2A6,A(7))+FQ
     13(A(8),C(7),EXA8,A(8),C(8))-Q7P(6)
      Q7P(7)=PQ4(A(6)*A(8),F1A7,C(7),P1A7,EXA8,A(8),X,C(8),P2A7,A(7))+C(
     11)*(EXP1-1.)/P1+C(2)*(EXP2-1.)/P2-Q7P(7)
      Q7P(8)=FQ3(A(6),C(7),EXA8,A(8),C(8))+PQ45(A(6)*A(8),C(7),EXA8,A(8)
     1,C(8),X,A(12))-Q7P(8)
      Q7P(9)=A(6)*A(8)*(FC*C(7)*((EXP1-1.)/P1-(1.-EXA8)/A(8))+FD*C(8)*((
     1EXP2-1.)/P2-(1.-EXA8)/A(8)))+A(7)*(FC*(EXP1-1.)/P1+FD*(EXP2-1.)/P2
     2)-Q7P(9)
      Q7P(10)=A(6)*A(8)*FE*(-C(7)*((EXP1-1.)/P1-(1.-EXA8)/A(8))+C(8)*((E
     1XP2-1.)/P2-(1.-EXA8)/A(8)))+A(7)*FE*((1.-EXP1)/P1+(EXP2-1.)/P2)-Q7
     2P(10)
      Q7P(12)=1.-EXA8-Q7P(12)
      IF (J6) 42,42,48
   42 IF (T(K)-A(14)) 48,48,44
   44 Q7P(14)=PQ413(A(6)*A(8),C(7),EXA8,C(8),A(8)*A(12),A(7))
      DO 46 I=1,14
      QP7(I)=Q7P(I)
   46 CONTINUE
      QP7(14)=-Q7P(14)
      X=T(K)
      J6=1
      GO TO 40
   48 IF (T(K)-A(13)) 50,50,52
   50 IF (T(K)-A(14)) 66,66,58
   52 IF (T(K)-A(14)) 62,62,54
   54 DO 56 I=1,14
      Q5P(I)=QP4(I)+QP7(I)
   56 CONTINUE
      GO TO 70
   58 DO 60 I=1,14
      Q5P(I)=QP7(I)
   60 CONTINUE
      GO TO 70
   62 DO 64 I=1,14
      Q5P(I)=QP4(I)
   64 CONTINUE
      GO TO 70
   66 DO 68 I=1,14
      Q5P(I)=0.
   68 CONTINUE
   70 CALL PARX (A,W,K)
   72 CONTINUE
      IF (IDOUBL.EQ.1) GO TO 78
      N2=0
      DO 74 I=1,M
      N2=N2+1
      DO 74 J=1,N2
      B(I,J)=0.
      DO 74 N3=1,N1
```

```
      DO 74 K=1,N
      N6=K+N*(N3-1)
      B(I,J)=B(I,J)+W(I,N6)*W(J,N6)/R(N6)
      B(J,I)=B(I,J)
   74 CONTINUE
      DO 76 I=1,M
      B(I,M+1)=0.
      DO 76 N3=1,N1
      DO 76 K=1,N
      N6=K+N*(N3-1)
      B(I,M+1)=B(I,M+1)+(R(N6)-H(N6))*W(I,N6)/R(N6)
   76 CONTINUE
      RETURN
C
   78 N2=0
      DO 82 I=1,M
      N2=N2+1
      DO 82 J=1,N2
      SC=0.
      DO 80 N3=1,N1
      DO 80 K=1,N
      N6=K+N*(N3-1)
      SA=W(I,N6)
      SB=W(J,N6)
      SC=SC+(SA*SB)/R(N6)
   80 CONTINUE
      B(I,J)=SC
      B(J,I)=SC
   82 CONTINUE
      DO 86 I=1,M
      SC=0.
      DO 84 N3=1,N1
      DO 84 K=1,N
      N6=K+N*(N3-1)
      SA=R(N6)-H(N6)
      SB=W(I,N6)
      SC=SC+(SA*SB)/R(N6)
   84 CONTINUE
      B(I,M+1)=SC
   86 CONTINUE
      RETURN
      END
```

```
      SUBROUTINE PARW1 (A,B,PARX,IDOUBL)
C
C        THE SUBROUTINE PARW1 EVALUATES THE PARTIAL DERIVATIVES OF THE
C             COMPARTMENT EQUATIONS Q1 - Q5 WITH RESPECT TO THE
C             MODEL PARAMETERS A(I) FOR THE ONE KIDNEY MODEL WITHOUT
C             GLOMERULAR FILTRATION. THE SUBROUTINE RETURNS THE
C             MATRIX B AND E REQUIRED IN THE MARQUARDT ALGORITHM,
C             A = A + INV(B) * E.  THE MATRIX E IS STORED IN THE
C             M+1 COLUMN OF THE MATRIX B WHERE M IS THE NUMBER OF
C             PARAMETERS.
C
C        A       - PARAMETERS FOR THE KIDNEY MODEL
C        B       - THE MATRIX OF PARTIAL DERIVATIVES
C        PARX    - THE SUBROUTINE WHICH EVALUATES THE PARTIAL
C                    DERIVATIVES FOR THE TIME FUNCTIONS
C        IDOUBL  - IF IDOUBL IS EQUAL TO 1 THEN THE SUMS ARE
C                    EVALUATED IN DOUBLE PRECISION
C
C             *NOTE - THE SUBROUTINE CHIW1 MUST BE CALLED BEFORE THE
C                       SUBROUTINE PARW1.
C
      COMMON/FNT/T(150),R(600),H(600)
      COMMON/QFN/Q1(150),Q2(150),Q3(150),Q4(150),Q5(150)
      COMMON/CONST/N,N1,M,M1
      COMMON/EXPP/EXP1,EXP2,EXA4,EXA6
      COMMON/ROOT/C(8),P1,P2,PP,S1
      COMMON/QFNP/QP4(14),QP7(14),Q1P(14),Q2P(14),Q3P(14),Q4P(14),
     1            Q5P(14)
      DIMENSION B(32,64),W(32,450),A(32)
      DOUBLE PRECISION SA,SB,SC
      PARP(X1,X2,X3)=(-S1+X1+X2+X3)/S1/2.
      PAPF(AA,BB,CC,DD,PA,PB,PC,PD)=((PA+PB)*(CC+DD)-(AA+BB)*(PC+PD))/(C
     1C+DD)**2
      PQ1(XK,PA,PAA,X)=(X+C(1)*PA*XK)*EXP1+(-X+C(2)*PAA*XK)*EXP2
      PQ2(XK,PC,PD,X)=(X+C(3)*PC*XK)*EXP1+(-X+C(4)*PD*XK)*EXP2
      PQ3(X,F1,CC1,EX,PA,XK,CC2,PAA)=X*((F1*CC1-C(1)*CC1**2*PA)*(EXP1-EX
     1)+C(1)*CC1*PA*XK*EXP1+(-F1*CC2-C(2)*CC2**2*PAA)*(EXP2-EX)+C(2)*CC2
     2*PAA*XK*EXP2)
      PQ35(X,CC1,EX,CC2,XK,A11)=X*(C(1)*CC1*(-CC1*(EXP1-EX)+XK*EX)+C(2)*
     1CC2*(-CC2*(EXP2-EX)+XK*EX))-A11*XK*EX
      PQ4(X,F1,CC1,PA,EX,Y,XK,CC2,PAA)=X*((F1*CC1-C(1)*CC1**2*PA)*((EXP1
     1-1.)/P1-(1.-EX)/Y)+C(1)*CC1*(-PA*(EXP1-1.)/P1**2+XK*PA*EXP1/P1)+(-
     2F1*CC2-C(2)*CC2**2*PAA)*((EXP2-1.)/P2-(1.-EX)/Y)+C(2)*CC2*(-PAA*(E
     3XP2-1.)/P2**2+XK*PAA*EXP2/P2))
      FQ3(X,CC1,EX,Y,CC2)=X*(C(1)*CC1*((EXP1-1.)/P1-(1.-EX)/Y)+C(2)*CC2*
     1((EXP2-1.)/P2-(1.-EX)/Y))
      PQ45(X,CC1,EX,Y,CC2,XK,Z)=X*(-C(1)*CC1**2*((EXP1-1.)/P1-(1.-EX)/Y)
     1+(C(1)*CC1+C(2)*CC2)*((1.-EX)/Y**2-XK*EX/Y)-C(2)*CC2**2*((EXP2-1.)
     2/P2-(1.-EX)/Y))+Z*XK*EX
      PQ413(X,CC1,EX,CC2,Y)=-X*(C(1)*CC1*(EX-EXP1)+C(2)*CC2*(EX-EXP2))+Y
     1*EX
      P1A1=PARP(A(1),A(2),A(3))
      P1A2=PARP(A(1),A(2),-A(3))
      P1A3=PARP(A(1),-A(2),A(3))
      P2A1=PARP(-A(1),-A(2),-A(3))
      P2A2=PARP(-A(1),-A(2),A(3))
      P2A3=PARP(-A(1),A(2),-A(3))
      AX=-A(5)*(P1+A(2))
      BX=-A(6)*A(2)
      F1A1=PAPF(AX,BX,P2,-P1,-A(5)*P1A1,0.,P2A1,-P1A1)
      F1A2=PAPF(AX,BX,P2,-P1,-A(5)*(P1A2+1.),-A(6),P2A2,-P1A2)
      F1A3=PAPF(AX,BX,P2,-P1,-A(5)*P1A3,0.,P2A3,-P1A3)
```

```
      AX=-A(6)*(P1+PP)
      BX=-A(5)*A(1)
      FFA1=PAPF(AX,BX,P2,-P1,-A(6)*(P1A1+1.),-A(5),P2A1,-P1A1)
      FFA2=PAPF(AX,BX,P2,-P1,-A(6)*P1A2,0.,P2A2,-P1A2)
      FFA3=PAPF(AX,BX,P2,-P1,-A(6)*(P1A3+1.),0.,P2A3,-P1A3)
      FC=(-P1-A(2))/(P2-P1)
      FD=(P2+A(2))/(P2-P1)
      FE=A(2)/(P2-P1)
      FF=A(1)/(P2-P1)
      FG=(-P1-PP)/(P2-P1)
      FH=(PP+P2)/(P2-P1)
      DO 42 K=1,N
      EXP1=EXP(P1*T(K))
      EXP2=EXP(P2*T(K))
      EXA4=EXP(-A(4)*T(K))
      DO 10 I=1,8
      Q1P(I)=0.
   10 CONTINUE
      Q1P(1)=PQ1(T(K),P1A1,P2A1,F1A1)
      Q1P(2)=PQ1(T(K),P1A2,P2A2,F1A2)
      Q1P(3)=PQ1(T(K),P1A3,P2A3,F1A3)
      Q1P(5)=FC*EXP1+FD*EXP2
      Q1P(6)=FE*(EXP2-EXP1)
      DO 12 I=1,8
      Q2P(I)=0.
   12 CONTINUE
      Q2P(1)=PQ2(T(K),P1A1,P2A1,FFA1)
      Q2P(2)=PQ2(T(K),P1A2,P2A2,FFA2)
      Q2P(3)=PQ2(T(K),P1A3,P2A3,FFA3)
      Q2P(5)=FF*(EXP2-EXP1)
      Q2P(6)=FG*EXP1+FH*EXP2
      DO 14 I=1,8
      Q3P(I)=0.
   14 CONTINUE
      Q3P(1)=PQ3(A(3),F1A1,C(5),EXA4,P1A1,T(K),C(6),P2A1)
      Q3P(2)=PQ3(A(3),F1A2,C(5),EXA4,P1A2,T(K),C(6),P2A2)
      Q3P(3)=PQ3(A(3),F1A3,C(5),EXA4,P1A3,T(K),C(6),P2A3)
      Q3P(3)=Q3P(3)+C(1)*C(5)*(EXP1-EXA4)+C(2)*C(6)*(EXP2-EXA4)
      Q3P(4)=PQ35(A(3),C(5),EXA4,C(6),T(K),A(7))
      Q3P(5)=A(3)*(FC*C(5)*(EXP1-EXA4)+FD*C(6)*(EXP2-EXA4))
      Q3P(6)=A(3)*FE*(-C(5)*(EXP1-EXA4)+C(6)*(EXP2-EXA4))
      Q3P(7)=EXA4
      DO 16 I=1,8
      Q4P(I)=0.
   16 CONTINUE
      J6=0
      IF (T(K)-A(8)) 18,18,20
   18 X=T(K)
      GO TO 22
   20 X=T(K)-A(8)
   22 EXP1=EXP(P1*X)
      EXP2=EXP(P2*X)
      EXA4=EXP(-A(4)*X)
      Q4P(1)=PQ4(A(3)*A(4),F1A1,C(5),P1A1,EXA4,A(4),X,C(6),P2A1)-Q4P(1)
      Q4P(2)=PQ4(A(3)*A(4),F1A2,C(5),P1A2,EXA4,A(4),X,C(6),P2A2)-Q4P(2)
      Q4P(3)=PQ4(A(3)*A(4),F1A3,C(5),P1A3,EXA4,A(4),X,C(6),P2A3)+FQ3(A(4
     1),C(5),EXA4,A(4),C(6))-Q4P(3)
      Q4P(4)=FQ3(A(3),C(5),EXA4,A(4),C(6))+PQ45(A(3)*A(4),C(5),EXA4,A(4)
     1,C(6),X,A(7))-Q4P(4)
      Q4P(5)=A(3)*A(4)*(FC*C(5)*((EXP1-1.)/P1-(1.-EXA4)/A(4))+FD*C(6)*((
     1EXP2-1.)/P2-(1.-EXA4)/A(4)))-Q4P(5)
      Q4P(6)=A(3)*A(4)*FE*(-C(5)*((EXP1-1.)/P1-(1.-EXA4)/A(4))+C(6)*((EX
```

```
     1P2-1.)/P2-(1.-EXA4)/A(4)))-Q4P(6)
      Q4P(7)=1.-EXA4-Q4P(7)
      IF (J6) 24,24,30
   24 IF (T(K)-A(8)) 30,30,26
   26 Q4P(8)=PQ413(A(3)*A(4),C(5),EXA4,C(6),A(4)*A(7))
      DO 28 I=1,8
      QP4(I)=Q4P(I)
   28 CONTINUE
      QP4(8)=-Q4P(8)
      X=T(K)
      J6=1
      GO TO 22
   30 IF (T(K)-A(8)) 36,36,32
   32 DO 34 I=1,8
      Q5P(I)=QP4(I)
   34 CONTINUE
      GO TO 40
   36 DO 38 I=1,8
      Q5P(I)=0.
   38 CONTINUE
   40 CALL PARX (A,W,K)
   42 CONTINUE
      IF (IDOUBL.EQ.1) GO TO 48
      N2=0
      DO 44 I=1,M
      N2=N2+1
      DO 44 J=1,N2
      B(I,J)=0.
      DO 44 N3=1,N1
      DO 44 K=1,N
      N6=K+N*(N3-1)
      B(I,J)=B(I,J)+W(I,N6)*W(J,N6)/R(N6)
      B(J,I)=B(I,J)
   44 CONTINUE
      DO 46 I=1,M
      B(I,M+1)=0.
      DO 46 N3=1,N1
      DO 46 K=1,N
      N6=K+N*(N3-1)
      B(I,M+1)=B(I,M+1)+(R(N6)-H(N6))*W(I,N6)/R(N6)
   46 CONTINUE
      RETURN
C
   48 N2=0
      DO 52 I=1,M
      N2=N2+1
      DO 52 J=1,N2
      SC=0.
      DO 50 N3=1,N1
      DO 50 K=1,N
      N6=K+N*(N3-1)
      SA=W(I,N6)
      SB=W(J,N6)
      SC=SC+(SA*SB)/R(N6)
   50 CONTINUE
      B(I,J)=SC
      B(J,I)=SC
   52 CONTINUE
      DO 56 I=1,M
      SC=0.
      DO 54 N3=1,N1
      DO 54 K=1,N
```

```
      N6=K+N*(N3-1)
      SA=R(N6)-H(N6)
      SB=W(I,N6)
      SC=SC+(SA*SB)/R(N6)
   54 CONTINUE
      B(I,M+1)=SC
   56 CONTINUE
      RETURN
C
      END
```

```
      SUBROUTINE PARW2 (A,B,PARX,IDOUBL)
C
C        THE SUBROUTINE PARW2 EVALUATES THE PARTIAL DERIVATIVES OF THE
C             COMPARTMENT EQUATIONS Q1 - Q5 WITH RESPECT TO THE MODEL
C             PARAMETERS A(I) FOR THE TWO KIDNEY MODEL WITHOUT
C             GLOMERULAR FILTRATION.  THE SUBROUTINE RETURNS THE
C             MATRIX B AND E REQUIRED IN THE MARQUARDT ALGORITHM,
C             A = A + INV(B) * E.  THE MATRIX E IS STORED IN THE
C             M+1 COLUMN OF THE MATRIX B WHERE M IS THE NUMBER OF
C             PARAMETERS.
C
C          A       - PARAMETERS FOR THE KIDNEY MODEL
C          B       - THE MATRIX OF PARTIAL DERIVATIVES
C          PARX    - THE SUBROUTINE WHICH EVALUATES THE PARTIAL
C                      DERIVATIVES FOR THE TIME FUNCTIONS
C          IDOUBL  - IF IDOUBL IS EQUAL TO 1 THEN THE SUMS ARE
C                      EVALUATED IN DOUBLE PRECISION
C
C             *NOTE - THE SUBROUTINE CHIW2 MUST BE CALLED BEFORE THE
C                       SUBROUTINE PARW2.
C
      COMMON/FNT/T(150),R(600),H(600)
      COMMON/QFN/Q1(150),Q2(150),Q3(150),Q4(150),Q5(150),Q6(150),Q7(150)
      COMMON/CONST/N,N1,M,M1
      COMMON/EXPP/EXP1,EXP2,EXA4,EXA6
      COMMON/ROOT/C(8),P1,P2,PP,S1
      COMMON/QFNP/QP4(14),QP7(14),Q1P(14),Q2P(14),Q3P(14),Q4P(14),
     1            Q5P(14),Q6P(14),Q7P(14)
      DIMENSION B(32,64),W(32,600),A(32)
      DOUBLE PRECISION SA,SB,SC
      PARP(X1,X2,X3,X4)=(-S1+X1+X2+X3+X4)/S1/2.
      PAPF(AA,BB,CC,DD,PA,PB,PC,PD)=((PA+PB)*(CC+DD)-(AA+BB)*(PC+PD))/(C
     1C+DD)**2
      PQ1(XK,PA,PAA,X)=(X+C(1)*PA*XK)*EXP1+(-X+C(2)*PAA*XK)*EXP2
      PQ2(XK,PC,PD,X)=(X+C(3)*PC*XK)*EXP1+(-X+C(4)*PD*XK)*EXP2
      PQ3(X,F1,CC1,EX,PA,XK,CC2,PAA)=X*((F1*CC1-C(1)*CC1**2*PA)*(EXP1-EX
     1)+C(1)*CC1*PA*XK*EXP1+(-F1*CC2-C(2)*CC2**2*PAA)*(EXP2-EX)+C(2)*CC2
     2*PAA*XK*EXP2)
      PQ35(X,CC1,EX,CC2,XK,A11)=X*(C(1)*CC1*(-CC1*(EXP1-EX)+XK*EX)+C(2)*
     1CC2*(-CC2*(EXP2-EX)+XK*EX))-A11*XK*EX
      PQ4(X,F1,CC1,PA,EX,Y,XK,CC2,PAA)=X*((F1*CC1-C(1)*CC1**2*PA)*((EXP1
     1-1.)/P1-(1.-EX)/Y)+C(1)*CC1*(-PA*(EXP1-1.)/P1**2+XK*PA*EXP1/P1)+(-
     2F1*CC2-C(2)*CC2**2*PAA)*((EXP2-1.)/P2-(1.-EX)/Y)+C(2)*CC2*(-PAA*(E
     3XP2-1.)/P2**2+XK*PAA*EXP2/P2))
      FQ3(X,CC1,EX,Y,CC2)=X*(C(1)*CC1*((EXP1-1.)/P1-(1.-EX)/Y)+C(2)*CC2*
     1((EXP2-1.)/P2-(1.-EX)/Y))
      PQ45(X,CC1,EX,Y,CC2,XK,Z)=X*(-C(1)*CC1**2*((EXP1-1.)/P1-(1.-EX)/Y)
     1+(C(1)*CC1+C(2)*CC2)*((1.-EX)/Y**2-XK*EX/Y)-C(2)*CC2**2*((EXP2-1.)
     2/P2-(1.-EX)/Y))+Z*XK*EX
      PQ413(X,CC1,EX,CC2,Y)=-X*(C(1)*CC1*(EX-EXP1)+C(2)*CC2*(EX-EXP2))+Y
     1*EX
      P1A1=PARP(A(1),A(2),A(3),A(5))
      P1A2=PARP(A(1),A(2),-A(3),-A(5))
      P1A3=PARP(A(1),-A(2),A(3),A(5))
      P1A5=P1A3
      P2A1=PARP(-A(1),-A(2),-A(3),-A(5))
      P2A2=PARP(-A(1),-A(2),A(3),A(5))
      P2A3=PARP(-A(1),A(2),-A(3),-A(5))
      P2A5=P2A3
      AX=-A(7)*(P1+A(2))
      BX=-A(8)*A(2)
      F1A1=PAPF(AX,BX,P2,-P1,-A(7)*P1A1,0.,P2A1,-P1A1)
```

```
      F1A2=PAPF(AX,BX,P2,-P1,-A(7)*(P1A2+1.),-A(8),P2A2,-P1A2)
      F1A3=PAPF(AX,BX,P2,-P1,-A(7)*P1A3,0.,P2A3,-P1A3)
      F1A5=F1A3
      AX=-A(8)*(P1+PP)
      BX=-A(7)*A(1)
      FFA1=PAPF(AX,BX,P2,-P1,-A(8)*(P1A1+1.),-A(7),P2A1,-P1A1)
      FFA2=PAPF(AX,BX,P2,-P1,-A(8)*P1A2,0.,P2A2,-P1A2)
      FFA3=PAPF(AX,BX,P2,-P1,-A(8)*(P1A3+1.),0.,P2A3,-P1A3)
      FFA5=FFA3
      FC=(-P1-A(2))/(P2-P1)
      FD=(P2+A(2))/(P2-P1)
      FE=A(2)/(P2-P1)
      FF=A(1)/(P2-P1)
      FG=(-P1-PP)/(P2-P1)
      FH=(PP+P2)/(P2-P1)
      DO 72 K=1,N
      EXP1=EXP(P1*T(K))
      EXP2=EXP(P2*T(K))
      EXA4=EXP(-A(4)*T(K))
      EXA6=EXP(-A(6)*T(K))
      DO 10 I=1,12
      Q1P(I)=0.
   10 CONTINUE
      Q1P(1)=PQ1(T(K),P1A1,P2A1,F1A1)
      Q1P(2)=PQ1(T(K),P1A2,P2A2,F1A2)
      Q1P(3)=PQ1(T(K),P1A3,P2A3,F1A3)
      Q1P(5)=Q1P(3)
      Q1P(7)=FC*EXP1+FD*EXP2
      Q1P(8)=FE*(EXP2-EXP1)
      DO 12 I=1,12
      Q2P(I)=0.
   12 CONTINUE
      Q2P(1)=PQ2(T(K),P1A1,P2A1,FFA1)
      Q2P(2)=PQ2(T(K),P1A2,P2A2,FFA2)
      Q2P(3)=PQ2(T(K),P1A3,P2A3,FFA3)
      Q2P(5)=Q2P(3)
      Q2P(7)=FF*(EXP2-EXP1)
      Q2P(8)=FG*EXP1+FH*EXP2
      DO 14 I=1,12
      Q3P(I)=0.
   14 CONTINUE
      Q3P(1)=PQ3(A(3),F1A1,C(5),EXA4,P1A1,T(K),C(6),P2A1)
      Q3P(2)=PQ3(A(3),F1A2,C(5),EXA4,P1A2,T(K),C(6),P2A2)
      Q3P(5)=PQ3(A(3),F1A5,C(5),EXA4,P1A5,T(K),C(6),P2A5)
      Q3P(3)=Q3P(5)+C(1)*C(5)*(EXP1-EXA4)+C(2)*C(6)*(EXP2-EXA4)
      Q3P(4)=PQ35(A(3),C(5),EXA4,C(6),T(K),A(9))
      Q3P(7)=A(3)*(FC*C(5)*(EXP1-EXA4)+FD*C(6)*(EXP2-EXA4))
      Q3P(8)=A(3)*FE*(-C(5)*(EXP1-EXA4)+C(6)*(EXP2-EXA4))
      Q3P(9)=EXA4
      DO 16 I=1,12
      Q6P(I)=0.
   16 CONTINUE
      Q6P(1)=PQ3(A(5),F1A1,C(7),EXA6,P1A1,T(K),C(8),P2A1)
      Q6P(2)=PQ3(A(5),F1A2,C(7),EXA6,P1A2,T(K),C(8),P2A2)
      Q6P(3)=PQ3(A(5),F1A3,C(7),EXA6,P1A3,T(K),C(8),P2A3)
      Q6P(5)=Q6P(3)+C(1)*C(7)*(EXP1-EXA6)+C(2)*C(8)*(EXP2-EXA6)
      Q6P(6)=PQ35(A(5),C(7),EXA6,C(8),T(K),A(10))
      Q6P(7)=A(5)*(FC*C(7)*(EXP1-EXA6)+FD*C(8)*(EXP2-EXA6))
      Q6P(8)=A(5)*FE*(-C(7)*(EXP1-EXA6)+C(8)*(EXP2-EXA6))
      Q6P(10)=EXA6
      DO 18 I=1,12
      Q4P(I)=0.
```

```
18 CONTINUE
   J6=0
   IF (T(K)-A(11)) 20,20,22
20 X=T(K)
   GO TO 24
22 X=T(K)-A(11)
24 EXP1=EXP(P1*X)
   EXP2=EXP(P2*X)
   EXA4=EXP(-A(4)*X)
   Q4P(1)=PQ4(A(3)*A(4),F1A1,C(5),P1A1,EXA4,A(4),X,C(6),P2A1)-Q4P(1)
   Q4P(2)=PQ4(A(3)*A(4),F1A2,C(5),P1A2,EXA4,A(4),X,C(6),P2A2)-Q4P(2)
   Q4P(3)=PQ4(A(3)*A(4),F1A3,C(5),P1A3,EXA4,A(4),X,C(6),P2A3)+FQ3(A(4
  1),C(5),EXA4,A(4),C(6))-Q4P(3)
   Q4P(4)=FQ3(A(3),C(5),EXA4,A(4),C(6))+PQ45(A(3)*A(4),C(5),EXA4,A(4)
  1,C(6),X,A(9))-Q4P(4)
   Q4P(5)=PQ4(A(3)*A(4),F1A5,C(5),P1A5,EXA4,A(4),X,C(6),P2A5)-Q4P(5)
   Q4P(7)=A(3)*A(4)*(FC*C(5)*((EXP1-1.)/P1-(1.-EXA4)/A(4))+FD*C(6)*((
  1EXP2-1.)/P2-(1.-EXA4)/A(4)))-Q4P(7)
   Q4P(8)=A(3)*A(4)*FE*(-C(5)*((EXP1-1.)/P1-(1.-EXA4)/A(4))+C(6)*((EX
  1P2-1.)/P2-(1.-EXA4)/A(4)))-Q4P(8)
   Q4P(9)=1.-EXA4-Q4P(9)
   IF (J6) 26,26,32
26 IF (T(K)-A(11)) 32,32,28
28 Q4P(11)=PQ413(A(3)*A(4),C(5),EXA4,C(6),A(4)*A(9))
   DO 30 I=1,12
   QP4(I)=Q4P(I)
30 CONTINUE
   QP4(11)=-Q4P(11)
   X=T(K)
   J6=1
   GO TO 24
32 DO 34 I=1,12
   Q7P(I)=0.
34 CONTINUE
   J6=0
   IF (T(K)-A(12)) 36,36,38
36 X=T(K)
   GO TO 40
38 X=T(K)-A(12)
40 EXP1=EXP(P1*X)
   EXP2=EXP(P2*X)
   EXA6=EXP(-A(6)*X)
   Q7P(1)=PQ4(A(5)*A(6),F1A1,C(7),P1A1,EXA6,A(6),X,C(8),P2A1)-Q7P(1)
   Q7P(2)=PQ4(A(5)*A(6),F1A2,C(7),P1A2,EXA6,A(6),X,C(8),P2A2)-Q7P(2)
   Q7P(3)=PQ4(A(5)*A(6),F1A3,C(7),P1A3,EXA6,A(6),X,C(8),P2A3)-Q7P(3)
   Q7P(5)=PQ4(A(5)*A(6),F1A5,C(7),P1A5,EXA6,A(6),X,C(8),P2A5)+FQ3(A(6
  1),C(7),EXA6,A(6),C(8))-Q7P(5)
   Q7P(6)=FQ3(A(5),C(7),EXA6,A(6),C(8))+PQ45(A(5)*A(6),C(7),EXA6,A(6)
  1,C(8),X,A(10))-Q7P(6)
   Q7P(7)=A(5)*A(6)*(FC*C(7)*((EXP1-1.)/P1-(1.-EXA6)/A(6))+FD*C(8)*((
  1EXP2-1.)/P2-(1.-EXA6)/A(6)))-Q7P(7)
   Q7P(8)=A(5)*A(6)*FE*(-C(7)*((EXP1-1.)/P1-(1.-EXA6)/A(6))+C(8)*((EX
  1P2-1.)/P2-(1.-EXA6)/A(6)))-Q7P(8)
   Q7P(10)=1.-EXA6-Q7P(10)
   IF (J6) 42,42,48
42 IF (T(K)-A(12)) 48,48,44
44 Q7P(12)=PQ413(A(5)*A(6),C(7),EXA6,C(8),A(6)*A(10))
   DO 46 I=1,12
   QP7(I)=Q7P(I)
46 CONTINUE
   QP7(12)=-Q7P(12)
   X=T(K)
```

```
      J6=1
      GO TO 40
   48 IF (T(K)-A(11)) 50,50,52
   50 IF (T(K)-A(12)) 66,66,58
   52 IF (T(K)-A(12)) 62,62,54
   54 DO 56 I=1,12
      Q5P(I)=QP4(I)+QP7(I)
   56 CONTINUE
      GO TO 70
   58 DO 60 I=1,12
      Q5P(I)=QP7(I)
   60 CONTINUE
      GO TO 70
   62 DO 64 I=1,12
      Q5P(I)=QP4(I)
   64 CONTINUE
      GO TO 70
   66 DO 68 I=1,12
      Q5P(I)=0.
   68 CONTINUE
   70 CALL PARX (A,W,K)
   72 CONTINUE
      IF (IDOUBL.EQ.1) GO TO 78
      N2=0
      DO 74 I=1,M
      N2=N2+1
      DO 74 J=1,N2
      B(I,J)=0.
      DO 74 N3=1,N1
      DO 74 K=1,N
      N6=K+N*(N3-1)
      B(I,J)=B(I,J)+W(I,N6)*W(J,N6)/R(N6)
      B(J,I)=B(I,J)
   74 CONTINUE
      DO 76 I=1,M
      B(I,M+1)=0.
      DO 76 N3=1,N1
      DO 76 K=1,N
      N6=K+N*(N3-1)
      B(I,M+1)=B(I,M+1)+(R(N6)-H(N6))*W(I,N6)/R(N6)
   76 CONTINUE
      RETURN
C
   78 N2=0
      DO 82 I=1,M
      N2=N2+1
      DO 82 J=1,N2
      SC=0.
      DO 80 N3=1,N1
      DO 80 K=1,N
      N6=K+N*(N3-1)
      SA=W(I,N6)
      SB=W(J,N6)
      SC=SC+(SA*SB)/R(N6)
   80 CONTINUE
      B(I,J)=SC
      B(J,I)=SC
   82 CONTINUE
      DO 86 I=1,M
      SC=0.
      DO 84 N3=1,N1
      DO 84 K=1,N
```

```
      N6=K+N*(N3-1)
      SA=R(N6)-H(N6)
      SB=W(I,N6)
      SC=SC+(SA*SB)/R(N6)
   84 CONTINUE
      B(I,M+1)=SC
   86 CONTINUE
      RETURN
      END
```

```
      SUBROUTINE PAR11 (A,W,K)
C
C        THE SUBROUTINE PAR11 EVALUATES THE PARTIAL DERIVATIVES OF
C             THE TIME FUNCTIONS WITH RESPECT TO THE MODEL PARAMETERS
C             AT THE TIME POINT K FOR THE TWO KIDNEY MODEL.
C
C        THE TIME FUNCTIONS WITH GLOMERULAR FILTRATION
C
C                  TF1 = Q3 + Q4 + A(10)*(Q1 + Q2)
C                  TF2 =      Q5 + A(11)*(Q1 + Q2)
C                  TF3 =           A(12)*(Q1 + Q2)
C
C        THE TIME FUNCTIONS WITHOUT GLOMERULAR FILTRATION
C
C                  TF1 = Q3 + Q4 + A(9)*(Q1 + Q2)
C                  TF2 =      Q5 + A(10)*(Q1 + Q2)
C                  TF3 =           A(11)*(Q1 + Q2)
C
C                       TF1 - KIDNEY
C                       TF2 - BLADDER
C                       TF3 - BLOOD AND TISSUE
C
C            A - PARAMETERS FOR THE KIDNEY MODEL
C            W - STORES THE PARTIAL DERIVATIVES OF THE TIME FUNCTIONS
C            K - INDEX FOR THE TIME POINT
C
      DIMENSION A(32),W(32,450)
      COMMON/QFN/Q1(150),Q2(150),Q3(150),Q4(150),Q5(150)
      COMMON/CONST/N,N1,M,M1
      COMMON/QFNP/QP4(14),QP7(14),Q1P(14),Q2P(14),Q3P(14),Q4P(14),
     1            Q5P(14)
      K2=N+K
      K3=2*N+K
      DO 10 I=1,M1
      W(I,K)=Q3P(I)+Q4P(I)+A(M1+1)*(Q1P(I)+Q2P(I))
      W(I,K2)=Q5P(I)+A(M1+2)*(Q1P(I)+Q2P(I))
      W(I,K3)=A(M1+3)*(Q1P(I)+Q2P(I))
   10 CONTINUE
      M2=M1+1
      DO 12 I=M2,M
      W(I,K)=0.
      W(I,K2)=0.
      W(I,K3)=0.
   12 CONTINUE
      W(M1+1,K)=Q1(K)+Q2(K)
      W(M1+2,K2)=Q1(K)+Q2(K)
      W(M1+3,K3)=Q1(K)+Q2(K)
      RETURN
      END
```

```
      SUBROUTINE PAR21 (A,W,K)
C
C        THE SUBROUTINE PAR21 EVALUATES THE PARTIAL DERIVATIVES OF
C             THE TIME FUNCTIONS WITH RESPECT TO THE MODEL PARAMETERS
C             AT THE TIME POINT K FOR THE TWO KIDNEY MODEL.
C
C        THE TIME FUNCTIONS WITH GLOMERULAR FILTRATION
C
C                TF1 = A(15)*(Q3+Q4)+A(16)*Q1+A(17)*Q2+A(18)*Q5
C                TF2 = A(19)*(Q6+Q7)+A(20)*Q1+A(21)*Q2+A(22)*Q5
C                TF3 = A(24)*Q1+A(25)*Q2+A(23)*Q5
C                   TF4 = A(26)*Q1+A(27)*Q2+A(28)*Q5+A(29)*(Q3+Q4)
C                              +A(30)*(Q6+Q7)
C
C        THE TIME FUNCTIONS WITHOUT GLOMERULAR FILTRATION
C
C                TF1 = A(13)*(Q3+Q4)+A(14)*Q1+A(15)*Q2+A(16)*Q5
C                TF2 = A(17)*(Q6+Q7)+A(18)*Q1+A(19)*Q2+A(20)*Q5
C                TF3 = A(22)*Q1+A(23)*Q2+A(21)*Q5
C                TF4 = A(24)*Q1+A(25)*Q2+A(26)*Q5+A(27)*(Q3+Q4)
C                              +A(28)*(Q6+Q7)
C
C                     TF1 - RIGHT KIDNEY
C                     TF2 - LEFT KIDNEY
C                     TF3 - BLADDER
C                     TF4 - BLOOD AND TISSUE
C
C          A - PARAMETERS FOR THE KIDNEY MODEL
C          W - STORES THE PARTIAL DERIVIATIVES OF THE TIME FUNCTIONS
C          K - INDEX FOR THE TIME POINT
C
      DIMENSION A(32),W(32,600)
      COMMON/QFN/Q1(150),Q2(150),Q3(150),Q4(150),Q5(150),Q6(150),Q7(150)
      COMMON/CONST/N,N1,M,M1
      COMMON/QFNP/QP4(14),QP7(14),Q1P(14),Q2P(14),Q3P(14),Q4P(14),
     1            Q5P(14),Q6P(14),Q7P(14)
      K2=N+K
      K3=2*N+K
      K4=3*N+K
      DO 10 I=1,M1
      W(I,K)=A(M1+1)*(Q3P(I)+Q4P(I))+A(M1+2)*Q1P(I)+A(M1+3)*Q2P(I)+A(M1+
     14)*Q5P(I)
      W(I,K2)=A(M1+5)*(Q6P(I)+Q7P(I))+A(M1+6)*Q1P(I)+A(M1+7)*Q2P(I)+A(M1
     1+8)*Q5P(I)
      W(I,K3)=A(M1+9)*Q5P(I)+A(M1+10)*Q1P(I)+A(M1+11)*Q2P(I)
      W(I,K4)=A(M1+12)*Q1P(I)+A(M1+13)*Q2P(I)+A(M1+14)*Q5P(I)+A(M1+15)*(
     1Q3P(I)+Q4P(I))+A(M1+16)*(Q6P(I)+Q7P(I))
   10 CONTINUE
      M2=M1+1
      DO 12 I=M2,M
      W(I,K)=0.
      W(I,K2)=0.
      W(I,K3)=0.
      W(I,K4)=0.
   12 CONTINUE
      W(M1+1,K)=Q3(K)+Q4(K)
      W(M1+2,K)=Q1(K)
      W(M1+3,K)=Q2(K)
      W(M1+4,K)=Q5(K)
      W(M1+5,K2)=Q6(K)+Q7(K)
      W(M1+6,K2)=Q1(K)
      W(M1+7,K2)=Q2(K)
```

```
W(M1+8,K2)=Q5(K)
W(M1+9,K3)=Q5(K)
W(M1+10,K3)=Q1(K)
W(M1+11,K3)=Q2(K)
W(M1+12,K4)=Q1(K)
W(M1+13,K4)=Q2(K)
W(M1+14,K4)=Q5(K)
W(M1+15,K4)=Q3(K)+Q4(K)
W(M1+16,K4)=Q6(K)+Q7(K)
RETURN
END
```

```
      SUBROUTINE PAR22 (A,W,K)
C
C        THE SUBROUTINE PAR22 EVALUATES THE PARTIAL DERIVATIVES OF THE
C             TIME FUNCTIONS WITH RESPECT TO THE MODEL PARAMETERS
C             AT THE TIME POINT K FOR THE TWO KIDNEY MODEL.
C
C        THE TIME FUNCTIONS WITH GLOMERULAR FILTRATION
C
C                  TF1 = Q3+Q4+A(15)*(Q1+Q2)+A(16)*Q5
C                  TF2 = Q6+Q7+A(17)*(Q1+Q2)+A(18)*Q5
C                  TF3 = A(19)*Q5+A(20)*(Q1+Q2)
C                  TF4 = A(21)*(Q1+Q2)+A(22)*Q5+A(23)*(Q3+Q4)
C                            +A(24)*(Q6+Q7)
C
C        THE TIME FUNCTIONS WITHOUT GLOMERULAR FILTRATION
C
C                  TF1 = Q3+Q4+A(13)*(Q1+Q2)+A(14)*Q5
C                  TF2 = Q6+Q7+A(15)*(Q1+Q2)+A(16)*Q5
C                  TF3 = A(17)*Q5+A(18)*(Q1+Q2)
C                  TF4 = A(19)*(Q1+Q2)+A(20)*Q5+A(21)*(Q3+Q4)
C                            +A(22)*(Q6+Q7)
C
C                       TF1 - RIGHT KIDNEY
C                       TF2 - LEFT KIDNEY
C                       TF3 - BLADDER
C                       TF4 - BLOOD AND TISSUE
C
C            A - PARAMETERS FOR THE KIDNEY MODEL
C            W - STORES THE PARTIAL DERIVATIVES OF THE TIME FUNCTIONS
C            K - INDEX FOR THE TIME POINT
C
      DIMENSION A(32),W(32,600)
      COMMON/QFN/Q1(150),Q2(150),Q3(150),Q4(150),Q5(150),Q6(150),Q7(150)
      COMMON/CONST/N,N1,M,M1
      COMMON/QFNP/QP4(14),QP7(14),Q1P(14),Q2P(14),Q3P(14),Q4P(14),
     1            Q5P(14),Q6P(14),Q7P(14)
      K2=N+K
      K3=2*N+K
      K4=3*N+K
      DO 10 I=1,M1
      W(I,K)=Q3P(I)+Q4P(I)+A(M1+1)*(Q1P(I)+Q2P(I))+A(M1+2)*Q5P(I)
      W(I,K2)=Q6P(I)+Q7P(I)+A(M1+3)*(Q1P(I)+Q2P(I))+A(M1+4)*Q5P(I)
      W(I,K3)=A(M1+5)*Q5P(I)+A(M1+6)*(Q1P(I)+Q2P(I))
      W(I,K4)=A(M1+7)*(Q1P(I)+Q2P(I))+A(M1+8)*Q5P(I)+A(M1+9)*(Q3P(I)+Q4P
     1(I))+A(M1+10)*(Q6P(I)+Q7P(I))
   10 CONTINUE
      M2=M1+1
      DO 12 I=M2,M
      W(I,K)=0.
      W(I,K2)=0.
      W(I,K3)=0.
      W(I,K4)=0.
   12 CONTINUE
      W(M1+1,K)=Q1(K)+Q2(K)
      W(M1+2,K)=Q5(K)
      W(M1+3,K2)=Q1(K)+Q2(K)
      W(M1+4,K2)=Q5(K)
      W(M1+5,K3)=Q5(K)
      W(M1+6,K3)=Q1(K)+Q2(K)
      W(M1+7,K4)=Q1(K)+Q2(K)
      W(M1+8,K4)=Q5(K)
      W(M1+9,K4)=Q3(K)+Q4(K)
```

```
W(M1+10,K4)=Q6(K)+Q7(K)
RETURN
END
```

```
      SUBROUTINE PAR23 (A,W,K)
C
C        THE SUBROUTINE PAR23 EVALUATES THE PARTIAL DERIVATIVES OF THE
C             TIME FUNCTIONS WITH RESPECT TO THE MODEL PARAMETERS
C             AT THE TIME POINT K FOR ,THE TWO KIDNEY MODEL.
C
C        THE TIME FUNCTIONS WITH GLOMERULAR FILTRATION
C
C                  TF1 = A(15)*Q3+A(16)*Q4+A(17)*(Q1+Q2)+A(18)*Q5
C                  TF2 = A(19)*Q6+A(20)*Q7+A(21)*(Q1+Q2)+A(22)*Q5
C                  TF3 = A(23)*Q5+A(24)*(Q1+Q2)
C                  TF4 = A(25)*(Q1+Q2)+A(26)*Q5+A(27)*Q3+A(28)*Q4
C                            +A(29)*Q6+A(30)*Q7
C
C        THE TIME FUNCTIONS WITHOUT GLOMERULAR FILTRATION
C
C                  TF1 = A(13)*Q3+A(14)*Q4+A(15)*(Q1+Q2)+A(16)*Q5
C                  TF2 = A(17)*Q6+A(18)*Q7+A(19)*(Q1+Q2)+A(20)*Q5
C                  TF3 = A(21)*Q5+A(22)*(Q1+Q2)
C                  TF4 = A(23)*(Q1+Q2)+A(24)*Q5+A(25)*Q3+A(26)*Q4
C                            +A(27)*Q6+A(28)*Q7
C
C                       TF1 - RIGHT KIDNEY
C                       TF2 - LEFT KIDNEY
C                       TF3 - BLADDER
C                       TF4 - BLOOD AND TISSUE
C
C           A - PARAMETERS FOR THE KIDNEY MODEL
C           W - STORES THE PARTIAL DERIVATIVES OF THE TIME FUNCTIONS
C           K - INDEX FOR THE TIME POINT
C
      DIMENSION A(32),W(32,600)
      COMMON/QFN/Q1(150),Q2(150),Q3(150),Q4(150),Q5(150),Q6(150),Q7(150)
      COMMON/CONST/N,N1,M,M1
      COMMON/QFNP/QP4(14),QP7(14),Q1P(14),Q2P(14),Q3P(14),Q4P(14),
     1            Q5P(14),Q6P(14),Q7P(14)
      K2=N+K
      K3=2*N+K
      K4=3*N+K
      DO 10 I=1,M1
      W(I,K)=A(M1+1)*Q3P(I)+A(M1+2)*Q4P(I)+A(M1+3)*(Q1P(I)+Q2P(I))+A(M1+
     14)*Q5P(I)
      W(I,K2)=A(M1+5)*Q6P(I)+A(M1+6)*Q7P(I)+A(M1+7)*(Q1P(I)+Q2P(I))+A(M1
     1+8)*Q5P(I)
      W(I,K3)=A(M1+9)*Q5P(I)+A(M1+10)*(Q1P(I)+Q2P(I))
      W(I,K4)=A(M1+11)*(Q1P(I)+Q2P(I))+A(M1+12)*Q5P(I)+A(M1+13)*Q3P(I)+A
     1(M1+14)*Q4P(I)+A(M1+15)*Q6P(I)+A(M1+16)*Q7P(I)
   10 CONTINUE
      M2=M1+1
      DO 12 I=M2,M
      W(I,K)=0.
      W(I,K2)=0.
      W(I,K3)=0.
      W(I,K4)=0.
   12 CONTINUE
      W(M1+1,K)=Q3(K)
      W(M1+2,K)=Q4(K)
      W(M1+3,K)=Q1(K)+Q2(K)
      W(M1+4,K)=Q5(K)
      W(M1+5,K2)=Q6(K)
      W(M1+6,K2)=Q7(K)
      W(M1+7,K2)=Q1(K)+Q2(K)
```

```
W(M1+8,K2)=Q5(K)
W(M1+9,K3)=Q5(K)
W(M1+10,K3)=Q1(K)+Q2(K)
W(M1+11,K4)=Q1(K)+Q2(K)
W(M1+12,K4)=Q5(K)
W(M1+13,K4)=Q3(K)
W(M1+14,K4)=Q4(K)
W(M1+15,K4)=Q6(K)
W(M1+16,K4)=Q7(K)
RETURN
END
```

```
      SUBROUTINE PAR24 (A,W,K)
C
C        THE SUBROUTINE PAR24 EVALUATES THE PARTIAL DERIVATIVES OF THE
C             TIME FUNCTIONS WITH RESPECT TO THE MODEL PARAMETERS
C             AT THE TIME POINT K FOR THE TWO KIDNEY MODEL.
C
C        THE TIME FUNCTIONS WITH GLOMERULAR FILTRATION
C
C                  TF1 = A(15)*Q3+A(16)*Q4+A(17)*Q1+A(18)*Q2
C                              +A(19)*Q5
C                  TF2 = A(15)*Q6+A(16)*Q7+A(20)*Q1+A(21)*Q2
C                              +A(22)*Q5
C                  TF3 = A(24)*Q1+A(25)*Q2+A(23)*Q5
C                  TF4 = A(26)*Q1+A(27)*Q2+A(28)*Q5+A(29)*(Q3+Q4)
C                              +A(30)*(Q6+Q7)
C
C        THE TIME FUNCTIONS WITHOUT GLOMERULAR FILTRATION
C
C                  TF1 = A(13)*Q3+A(14)*Q4+A(15)*Q1+A(16)*Q2
C                              +A(17)*Q5
C                  TF2 = A(15)*Q6+A(14)*Q7 A(18)*Q1+A(19)*Q2
C                              +A(20)*Q5
C                  TF3 = A(22)*Q1+A(23)*Q2+A(21)*Q5
C                  TF4 = A(24)*Q1+A(25)*Q2+A(26)*Q5+A(29)*(Q3+Q4)
C                              +A(28)*(Q6+Q7)
C                       TF1 - RIGHT KIDNEY
C                       TF2 - LEFT KIDNEY
C                       TF3 - BLADDER
C                       TF4 - BLOOD AND TISSUE
C
C            A - THE PARAMETERS FOR THE KIDNEY MODEL
C            W - STORES THE PARTIAL DERIVATIVES OF THE TIME FUNCTIONS
C            K - INDEX FOR THE TIME POINT
C
      DIMENSION A(32),W(32,600)
      COMMON/QFN/Q1(150),Q2(150),Q3(150),Q4(150),Q5(150),Q6(150),Q7(150)
      COMMON/CONST/N,N1,M,M1
      COMMON/QFNP/QP4(14),QP7(14),Q1P(14),Q2P(14),Q3P(14),Q4P(14),
     1            Q5P(14),Q6P(14),Q7P(14)
      K2=N+K
      K3=2*N+K
      K4=3*N+K
      DO 10 I=1,M1
      W(I,K)=A(M1+1)*Q3P(I)+A(M1+2)*Q4P(I)+A(M1+3)*Q1P(I)+A(M1+4)*Q2P(I)
     1+A(M1+5)*Q5P(I)
      W(I,K2)=A(M1+1)*Q6P(I)+A(M1+2)*Q7P(I)+A(M1+6)*Q1P(I)+A(M1+7)*Q2P(I
     1)+A(M1+8)*Q5P(I)
      W(I,K3)=A(M1+9)*Q5P(I)+A(M1+10)*Q1P(I)+A(M1+11)*Q2P(I)
      W(I,K4)=A(M1+12)*Q1P(I)+A(M1+13)*Q2P(I)+A(M1+14)*Q5P(I)+A(M1+15)*(
     1Q3P(I)+Q4P(I))+A(M1+16)*(Q6P(I)+Q7P(I))
   10 CONTINUE
      M2=M1+1
      DO 12 I=M2,M
      W(I,K)=0.
      W(I,K2)=0.
      W(I,K3)=0.
      W(I,K4)=0.
   12 CONTINUE
      W(M1+1,K)=Q3(K)
      W(M1+2,K)=Q4(K)
      W(M1+3,K)=Q1(K)
      W(M1+4,K)=Q2(K)
```

```
W(M1+5,K)=Q5(K)
W(M1+1,K2)=Q6(K)
W(M1+2,K2)=Q7(K)
W(M1+6,K2)=Q1(K)
W(M1+7,K2)=Q2(K)
W(M1+8,K2)=Q5(K)
W(M1+9,K3)=Q5(K)
W(M1+10,K3)=Q1(K)
W(M1+11,K3)=Q2(K)
W(M1+12,K4)=Q1(K)
W(M1+13,K4)=Q2(K)
W(M1+14,K4)=Q5(K)
W(M1+15,K4)=Q3(K)+Q4(K)
W(M1+16,K4)=Q6(K)+Q7(K)
RETURN
END
```

```
      SUBROUTINE PAR25 (A,W,K)
C
C        THE SUBROUTINE PAR25 EVALUATES THE PARTIAL DERIVATIVES OF THE
C             TIME FUNCTIONS WITH RESPECT TO THE MODEL PARAMETERS
C             AT THE TIME POINT K FOR THE TWO KIDNEY MODEL.
C
C        THE TIME FUNCTIONS WITH GLOMERULAR FILTRATION
C
C                  TF1 = Q3+Q4+A(15)*(Q1+Q2)
C                  TF2 = Q6+Q7+A(16)*(Q1+Q2)
C                  TF3 = Q5+A(17)*(Q1+Q2)
C                  TF4 = A(18)*(Q1+Q2)+A(19)*(Q3+Q4)+A(20)*(Q6+Q7)
C                            +A(21)*Q5
C
C        THE TIME FUNCTIONS WITHOUT GLOMERULAR FILTRATION
C
C                  TF1 = Q3+Q4+A(13)*(Q1+Q2)
C                  TF2 = Q6+Q7+A(14)*(Q1+Q2)
C                  TF3 = Q5+A(15)*(Q1+Q2)
C                  TF4 = A(16)*(Q1+Q2)+A(17)*(Q3+Q4)+A(18)*(Q6+Q7)
C                            +A(19)*Q5
C
C                       TF1 - RIGHT KIDNEY
C                       TF2 - LEFT KIDNEY
C                       TF3 - BLADDER
C                       TF4 - BLOOD AND TISSUE
C
C            A - PARAMETERS FOR THE KIDNEY MODEL
C            W - STORES THE PARTIAL DERIVATIVES OF THE TIME FUNCTIONS
C            K - INDEX FOR THE TIME POINT
C
      DIMENSION A(32),W(32,600)
      COMMON/QFN/Q1(150),Q2(150),Q3(150),Q4(150),Q5(150),Q6(150),Q7(150)
      COMMON/CONST/N,N1,M,M1
      COMMON/QFNP/QP4(14),QP7(14),Q1P(14),Q2P(14),Q3P(14),Q4P(14),
     1            Q5P(14),Q6P(14),Q7P(14)
      K2=N+K
      K3=2*N+K
      K4=3*N+K
      DO 10 I=1,M1
      W(I,K)=Q3P(I)+Q4P(I)+A(M1+1)*(Q1P(I)+Q2P(I))
      W(I,K2)=Q6P(I)+Q7P(I)+A(M1+2)*(Q1P(I)+Q2P(I))
      W(I,K3)=Q5P(I)+A(M1+3)*(Q1P(I)+Q2P(I))
      W(I,K4)=A(M1+4)*(Q1P(I)+Q2P(I))+A(M1+5)*(Q3P(I)+Q4P(I))+A(M1+6)*(Q
     16P(I)+Q7P(I))+A(M1+7)*Q5P(I)
   10 CONTINUE
      M2=M1+1
      DO 12 I=M2,M
      W(I,K)=0.
      W(I,K2)=0.
      W(I,K3)=0.
      W(I,K4)=0.
   12 CONTINUE
      W(M1+1,K)=Q1(K)+Q2(K)
      W(M1+2,K2)=Q1(K)+Q2(K)
      W(M1+3,K3)=Q1(K)+Q2(K)
      W(M1+4,K4)=Q1(K)+Q2(K)
      W(M1+5,K4)=Q3(K)+Q4(K)
      W(M1+6,K4)=Q6(K)+Q7(K)
      W(M1+7,K4)=Q5(K)
      RETURN
      END
```

```
      SUBROUTINE PAR26 (A,W,K)
C
C        THE SUBROUTINE PAR26 EVALUATES THE PARTIAL DERIVATIVES OF THE
C             TIME FUNCTIONS WITH RESPECT TO THE MODEL PARAMETERS
C             AT THE TIME POINT K FOR THE TWO KIDNEY MODEL.
C
C
C                  TF1 = Q3+A(15)*Q4+A(16)*(Q1+Q2)+A(17)*Q5
C                  TF2 = Q6+A(18)*Q7+A(19)*(Q1+Q2)+A(20)*Q5
C                  TF3 = A(22)*Q5+A(21)*(Q1+Q2)
C                  TF4 = A(23)*(Q1+Q2)+A(24)*Q4+A(25)*Q7+A(26)*Q5
C
C        THE TIME FUNCTIONS WITHOUT GLOMERULAR FILTRATION
C
C                 TF1 = Q3+A(13)*Q4+A(14)*(Q1+Q2)+A(15)*Q5
C                 TF2 = Q6+A(16)*Q7+A(17)*(Q1+Q2)+A(18)*Q5
C                 TF3 = A(20)*Q5+A(19)*(Q1+Q2)
C                 TF4 = A(21)*(Q1+Q2)+A(22)*Q4+A(23)*Q7+A(24)*Q5
C
C
C                      TF1 - RIGHT KIDNEY
C                      TF2 - LEFT KIDNEY
C                      TF3 - BLADDER
C                      TF4 - BLOOD AND TISSUE
C
C            A - PARAMETERS FOR THE KIDNEY MODEL
C            W - STORES THE PARTIAL DERIVATIVES OF THE TIME FUNCTIONS
C            K - INDEX FOR THE TIME POINT
C
      DIMENSION A(32),W(32,600)
      COMMON/QFN/Q1(150),Q2(150),Q3(150),Q4(150),Q5(150),Q6(150),Q7(150)
      COMMON/CONST/N,N1,M,M1
      COMMON/QFNP/QP4(14),QP7(14),Q1P(14),Q2P(14),Q3P(14),Q4P(14),
     1            Q5P(14),Q6P(14),Q7P(14)
      K2=N+K
      K3=2*N+K
      K4=3*N+K
      DO 10 I=1,M1
      W(I,K)=Q3P(I)+A(M1+1)*Q4P(I)+A(M1+2)*(Q1P(I)+Q2P(I))+A(M1+3)*Q5P(I
     1)
      W(I,K2)=Q6P(I)+A(M1+4)*Q7P(I)+A(M1+5)*(Q1P(I)+Q2P(I))+A(M1+6)*Q5P(
     1I)
      W(I,K3)=A(M1+8)*Q5P(I)+A(M1+7)*(Q1P(I)+Q2P(I))
      W(I,K4)=A(M1+9)*(Q1P(I)+Q2P(I))+A(M1+10)*Q4P(I)+A(M1+11)*Q7P(I)+A(
     1M1+12)*Q5P(I)
   10 CONTINUE
      M2=M1+1
      DO 12 I=M2,M
      W(I,K)=0.
      W(I,K2)=0.
      W(I,K3)=0.
      W(I,K4)=0.
   12 CONTINUE
      W(M1+1,K)=Q4(K)
      W(M1+2,K)=Q1(K)+Q2(K)
      W(M1+3,K)=Q5(K)
      W(M1+4,K2)=Q7(K)
      W(M1+5,K2)=Q1(K)+Q2(K)
      W(M1+6,K2)=Q5(K)
      W(M1+7,K3)=Q1(K)+Q2(K)
      W(M1+8,K3)=Q5(K)
      W(M1+9,K4)=Q1(K)+Q2(K)
```

```
W(M1+10,K4)=Q4(K)
W(M1+11,K4)=Q7(K)
W(M1+12,K4)=Q5(K)
RETURN
END
```

```
      SUBROUTINE PAR27 (A,W,K)
C
C        THE SUBROUTINE PAR27 EVALUATES THE PARTIAL DERIVATIVES OF THE
C             TIME FUNCTIONS WITH RESPECT TO THE MODEL PARAMETERS
C             AT THE TIME POINT K FOR THE TWO KIDNEY MODEL.
C
C        THE TIME FUNCTIONS WITH GLOMERULAR FILTRATION
C
C                  TF1 = Q3 + Q4 + A(15)*(Q1 + Q2)
C                  TF2 = Q6 + Q7 + A(16)*(Q1 + Q2)
C                  TF3 =      Q5 + A(17)*(Q1 + Q2)
C                  TF4 =           A(18)*(Q1 + Q2)
C
C        THE TIME FUNCTIONS WITHOUT GLOMERULAR FILTRATION
C
C                  TF1 = Q3 + Q4 + A(13)*(Q1 + Q2)
C                  TF2 = Q6 + Q7 + A(14)*(Q1 + Q2)
C                  TF3 =      Q5 + A(15)*(Q1 + Q2)
C                  TF4 =           A(16)*(Q1 + Q2)
C
C                       TF1 - RIGHT KIDNEY
C                       TF2 - LEFT KIDNEY
C                       TF3 - BLADDER
C                       TF4 - BLOOD AND TISSUE
C
C                  THIS MODEL WAS FOR DATA COLLECTED ON MICE.
C
C             A - PARAMETERS FOR THE KIDNEY MODEL
C             W - STORES THE PARTIAL DERIVATIVES OF THE TIME FUNCTIONS
C             K - INDEX FOR THE TIME POINT
C
      DIMENSION A(32),W(32,600)
      COMMON/QFN/Q1(150),Q2(150),Q3(150),Q4(150),Q5(150),Q6(150),Q7(150)
      COMMON/CONST/N,N1,M,M1
      COMMON/QFNP/QP4(14),QP7(14),Q1P(14),Q2P(14),Q3P(14),Q4P(14),
     1            Q5P(14),Q6P(14),Q7P(14)
      K2=N+K
      K3=2*N+K
      K4=3*N+K
      DO 10 I=1,M1
      W(I,K)=Q3P(I)+Q4P(I)+A(M1+1)*(Q1P(I)+Q2P(I))
      W(I,K2)=Q6P(I)+Q7P(I)+A(M1+2)*(Q1P(I)+Q2P(I))
      W(I,K3)=Q5P(I)+A(M1+3)*(Q1P(I)+Q2P(I))
      W(I,K4)=A(M1+4)*(Q1P(I)+Q2P(I))
   10 CONTINUE
      M2=M1+1
      DO 12 I=M2,M
      W(I,K)=0.
      W(I,K2)=0.
      W(I,K3)=0.
      W(I,K4)=0.
   12 CONTINUE
      W(M1+1,K)=Q1(K)+Q2(K)
      W(M1+2,K2)=Q1(K)+Q2(K)
      W(M1+3,K3)=Q1(K)+Q2(K)
      W(M1+4,K4)=Q1(K)+Q2(K)
      RETURN
      END
```

```
      SUBROUTINE PAR28 (A,W,K)
C
C        THE SUBROUTINE PAR28 EVALUATES THE PARTIAL DERIVATIVES OF THE
C             TIME FUNCTIONS WITH RESPECT TO THE MODEL PARAMETERS
C             AT THE TIME POINT K FOR THE TWO KIDNEY MODEL.
C
C        THE TIME FUNCTIONS WITH GLOMERULAR FILTRATION
C
C                  TF1 = Q3+Q4+D1*(Q6+Q7)+(A(15)+D1*A(17))*(Q1+Q2)
C                            +(A(16)+D1*A(18))*Q5
C                  TF2 = Q6+Q7+D2*(Q3+Q4)+(A(17)+D2*A(15))*(Q1+Q2)
C                            +(A(18)+D2*A(16))*Q5
C                  TF3 = A(19)*Q5+A(20)*(Q3+Q4)+A(21)*(Q6+Q7)
C                            +A(22)*(Q1+Q2)
C                  TF4 = A(23)*(Q1+Q2)+A(24)*(Q3+Q4)+A(25)*(Q6+Q7)
C                            +A(26)*Q5
C
C        THE TIME FUNCTIONS WITHOUT GLOMERULAR FILTRATION
C
C                  TF1 = Q3+Q4+D1*(Q6+Q7)+(A(13)+D1*A(15))*(Q1+Q2)
C                            +(A(14)+D1*A(16))*Q5
C                  TF2 = Q6+Q7+D2*(Q3+Q4)+(A(15)+D2*A(13))*(Q1+Q2)
C                            +(A(16)+D2*A(14))*Q5
C                  TF3 = A(17)*Q5+A(18)*(Q3+Q4)+A(19)*(Q6+Q7)
C                            +A(20)*(Q1+Q2)
C                  TF4 = A(21)*(Q1+Q2)+A(22)*(Q3+Q4)+A(23)*(Q6+Q7)
C                            +A(24)*Q5
C
C                       TF1 - RIGHT KIDNEY
C                       TF2 - LEFT KIDNEY
C                       TF3 - BLADDER
C                       TF4 - BLOOD AND TISSUE
C
C                 THIS IS THE ADAC MODEL(J. A. DEGRAZIA, P. O. SCHEIBE,
C                 ET AL., CLINICAL APPLICATIONS OF KINETIC MODEL OF
C                 HIPPURATE DISTRIBUTION AND RENAL CLEARANCE, J. NUCL.
C                 MED., 15(1974), PP 102-114).
C
C            A - PARAMETERS FOR THE KIDNEY MODEL
C            W - STORES THE PARTIAL DERIVATIVES OF THE TIME FUNCTIONS
C            K - INDEX FOR THE TIME POINT
C
      DIMENSION A(32),W(32,600)
      DATA D1,D2/.05,.08/
      COMMON/QFN/Q1(150),Q2(150),Q3(150),Q4(150),Q5(150),Q6(150),Q7(150)
      COMMON/CONST/N,N1,M,M1
      COMMON/QFNP/QP4(14),QP7(14),Q1P(14),Q2P(14),Q3P(14),Q4P(14),
     1            Q5P(14),Q6P(14),Q7P(14)
      K2=N+K
      K3=2*N+K
      K4=3*N+K
      DO 10 I=1,M1
      W(I,K)=Q3P(I)+Q4P(I)+D1*(Q6P(I)+Q7P(I))+(A(M1+1)+D1*A(M1+3))*(Q1P(
     1I)+Q2P(I))+(A(M1+2)+D1*A(M1+4))*Q5P(I)
      W(I,K2)=Q6P(I)+Q7P(I)+D2*(Q3P(I)+Q4P(I))+(A(M1+3)+D2*A(M1+1))*(Q1P
     1(I)+Q2P(I))+(A(M1+4)+D2*A(M1+2))*Q5P(I)
      W(I,K3)=A(M1+5)*Q5P(I)+A(M1+6)*(Q3P(I)+Q4P(I))+A(M1+7)*(Q6P(I)+Q7P
     1(I))+A(M1+8)*(Q1P(I)+Q2P(I))
      W(I,K4)=A(M1+9)*(Q1P(I)+Q2P(I))+A(M1+10)*(Q3P(I)+Q4P(I))+A(M1+11)*
     1(Q6P(I)+Q7P(I))+A(M1+12)*Q5P(I)
   10 CONTINUE
      M2=M1+1
```

```
      DO 12 I=M2,M
      W(I,K)=0.
      W(I,K2)=0
      W(I,K3)=0.
      W(I,K4)=0.
   12 CONTINUE
      W(M1+1,K)=Q1(K)+Q2(K)
      W(M1+2,K)=Q5(K)
      W(M1+3,K)=D1*(Q1(K)+Q2(K))
      W(M1+4,K)=D1*Q5(K)
      W(M1+1,K2)=D2*(Q1(K)+Q2(K))
      W(M1+2,K2)=D2*Q5(K)
      W(M1+3,K2)=Q1(K)+Q2(K)
      W(M1+4,K2)=Q5(K)
      W(M1+5,K3)=Q5(K)
      W(M1+6,K3)=Q3(K)+Q4(K)
      W(M1+7,K3)=Q6(K)+Q7(K)
      W(M1+8,K3)=Q1(K)+Q2(K)
      W(M1+9,K4)=Q1(K)+Q2(K)
      W(M1+10,K4)=Q3(K)+Q4(K)
      W(M1+11,K4)=Q6(K)+Q7(K)
      W(M1+12,K4)=Q5(K)
      RETURN
      END
```

```
      SUBROUTINE PLOT (TIME)
C
C           THE SUBROUTINE PLOT GIVES A PLOT OF EACH TIME FUNCTION
C                COMPARING THE FITTED CURVES TO THE ACTUAL DATA.
C
C            TIME - THE TIME INTERVAL IN SECONDS
C
      DIMENSION LINE(135)
      COMMON/FNT/T(150),R(600),H(600)
      COMMON/CONST/N,N1,M,M1
      DO 92 L=1,N1
      XMAX=0.
      DO 12 K=1,N
      NK=(L-1)*N+K
      IF (H(NK)-XMAX) 12,12,10
   10 XMAX=H(NK)
   12 CONTINUE
      DO 16 K=1,N
      NK=(L-1)*N+K
      IF (R(NK)-XMAX) 16,16,14
   14 XMAX=R(NK)
   16 CONTINUE
      DO 18 I=1,135
      LINE(I)=1H
   18 CONTINUE
      IF (N-113) 20,20,22
   20 NX=N
      GO TO 24
   22 NX=113
   24 LINE(20)=1H.
      MAX=INT(XMAX)
      DO 88 L1=1,60
      DO 32 K=1,NX
      KK=20+K
      LINE(KK)=1H
      NK=(L-1)*N+K
      II=INT((H(NK)/XMAX)*60.)
      IF (61-L1-II) 28,26,28
   26 LINE(KK)=1H*
   28 JJ=INT(R(NK)*60./XMAX)
      IF (61-L1-JJ) 32,30,32
   30 LINE(KK)=1HX
   32 CONTINUE
      IF (L1-6) 34,86,86
   34 GO TO (36,52,68,74,80),L1
   36 LN1=L+4-N1
      GO TO (38,38,42,38),LN1
   38 DO 40 I=52,102
      LINE(I)=1H*
   40 CONTINUE
      GO TO 46
   42 DO 44 I=22,72
      LINE(I)=1H*
   44 CONTINUE
   46 IF (L-1) 50,48,50
   48 PRINT 94, MAX,(LINE(I),I=20,132)
      GO TO 88
   50 PRINT 96, MAX,(LINE(I),I=20,132)
      GO TO 88
   52 IF (N1-3) 56,54,56
   54 GO TO (60,64,66),L
   56 GO TO (58,62,64,66),L
```

```
 58 PRINT 98, (LINE(I),I=20,51)
    GO TO 88
 60 PRINT 100, (LINE(I),I=20,51)
    GO TO 88
 62 PRINT 102, (LINE(I),I=20,51)
    GO TO 88
 64 PRINT 104, (LINE(I),I=73,132)
    GO TO 88
 66 PRINT 106, (LINE(I),I=20,51)
    GO TO 88
 68 LN1=L+4-N1
    GO TO (70,70,72,70),LN1
 70 PRINT 108, (LINE(I),I=20,51)
    GO TO 88
 72 PRINT 110, (LINE(I),I=73,132)
    GO TO 88
 74 LN1=L+4-N1
    GO TO (76,76,78,76),LN1
 76 PRINT 112, (LINE(I),I=20,51)
    GO TO 88
 78 PRINT 114, (LINE(I),I=73,132)
    GO TO 88
 80 LN1=L+4-N1
    GO TO (82,82,84,82),LN1
 82 PRINT 116, (LINE(I),I=20,51)
    GO TO 88
 84 PRINT 118, (LINE(I),I=73,132)
    GO TO 88
 86 PRINT 120, (LINE(I),I=20,132)
 88 CONTINUE
    DO 90 I=1,NX
    KK=20+I
    LINE(KK)=1H.
 90 CONTINUE
    PRINT 122, (LINE(I),I=20,132)
    XTIME=TIME/60.
    PRINT 124, XTIME
 92 CONTINUE
    RETURN
C
C
 94 FORMAT(1H1,12X,I5,1X,113A1)
 96 FORMAT(13X,I5,1X,113A1)
 98 FORMAT(19X,32A1,1H*,7X,*TIMEFUNCTION FOR THE RIGHT KIDNEY*,9X,1H*)
100 FORMAT(19X,32A1,1H*,9X,*TIME FUNCTION FOR THE KIDNEY*,12X,1H*)
102 FORMAT(19X,32A1,1H*,7X,*TIMEFUNCTION FOR THE LEFT KIDNEY*,10X,1H*)
104 FORMAT(19X,1H.,1X,1H*,7X,*TIMEFUNCTION FOR THE BLADDER*,14X,1H*,60
   1A1)
106 FORMAT(19X,32A1,1H*,7X,*TIMEFUNCTION FOR THE BLOOD AND TISSUE*,5X,
   11H*)
108 FORMAT(19X,32A1,1H*,49X,1H*)
110 FORMAT(19X,1H.,1X,1H*,49X,1H*,60A1)
112 FORMAT(19X,32A1,20H*SAMPLE FUNCTION = X,10X,21HFITTED FUNCTION = *
   1 *)
114 FORMAT(19X,1H.,1X,20H*SAMPLE FUNCTION = X,10X,21HFITTED FUNCTION =
   1 * *,60A1)
116 FORMAT(19X,32A1,51(1H*))
118 FORMAT(19X,1H.,1X,51(1H*),60A1)
120 FORMAT(19X,113A1)
122 FORMAT(18X,1H0,113A1)
124 FORMAT(36X,*TIME UNITS = *,F5.2,* MIN.*)
    END
```

```
      SUBROUTINE PRAM1 (A,LL,PRMX,IGLOM)
C
C        THE SUBROUTINE PRAM1 PRINTS OUT A TABLE FOR THE PARAMETERS
C                AND GIVES THE FUNCTIONAL RELATIONSHIP BETWEEN THE
C                VARIOUS COMPARTMENTS AND THE TIME FUNCTIONS.  THIS IS
C                THE MODEL FOR ONE KIDNEY WHERE THE OTHER KIDNEY HAS
C                BEEN REMOVED.
C
C            A      - THE PARAMETERS
C            LL     = 0  GIVES A HEADING  ***THE PARAMETERS ARE***
C                   = 1  GIVES A HEADING  ***INITIAL ESTIMATES FOR THE
C                      PARAMETERS***
C            PRMX   - SUBROUTINE WHICH PRINTS OUT THE FUNCTIONAL
C                      RELATIONSHIP BETWEEN THE TIME FUNCTIONS AND
C                      THE COMPARTMENTS
C            IGLOM  - IF IGLOM=1 THE MODEL HAS A PATH FOR GLOMERULAR
C                      FILTRATION
C
      DIMENSION A(32)
      IF (IGLOM.EQ.1) GO TO 10
      IDIF=1
      GO TO 12
   10 IDIF=0
   12 IF (LL) 16,14,16
   14 PRINT 20
      GO TO 18
   16 PRINT 22
   18 PRINT 24
      IF (IGLOM.EQ.1) PRINT 26, A(4)
      PRINT 28, A(3)
      PRINT 30
      I=5-IDIF
      PRINT 32, I,A(I)
      I=9-IDIF
      PRINT 34, I,A(I)
      PRINT 36, A(1)
      PRINT 38, A(2)
      I=6-IDIF
      PRINT 40, I,A(I)
      I=7-IDIF
      PRINT 42, I,A(I)
      I=8-IDIF
      PRINT 44, I,A(I)
      CALL PRMX (A,IGLOM)
      PRINT 46
      PRINT 48
      PRINT 50
      PRINT 52
      PRINT 54
      RETURN
C
C
   20 FORMAT(1H1,52X,28H*****THE PARAMETERS ARE*****/)
   22 FORMAT(1H1,43X,46H*****INITIAL ESTIMATES FOR THE PARAMETERS*****/)
   24 FORMAT(1X,*PARAMETERS*,55X,*SYMBOL*,21X,*VALUE*)
   26 FORMAT(/,1X,*GLOMERULAR FILTRATION RATE*,40X,*A(4)*,20X,F10.5)
   28 FORMAT(1X,*FLOW RATE FROM BLOOD POOL TO TUBULAR CELLS*,24X,*A(3)*,
     120X,F10.5)
   30 FORMAT(1X,*KIDNEY*)
   32 FORMAT(4X,*TUBULAR CELL FLOW RATE*,41X,*A(*,I1,*)*,20X,F10.5)
   34 FORMAT(4X,*ESTUARY DELAY TIME*,45X,*A(*,I1*)*,20X,F10.5)
   36 FORMAT(1X,*FLOW RATE FROM BLOOD POOL TO EXTRAVASCULAR POOL*,19X,*A
```

```
  1(1)*,20X,F10.5)
38 FORMAT(1X,*FLOW RATE FROM EXTRAVASCULAR POOL TO BLOOD POOL*,19X,*A
  1(2)*,20X,F10.5)
40 FORMAT(1X,*AMOUNT AT TIME ZERO IN THE BLOOD POOL*,29X,*A(*,I1,*)*,
  118X,F12.5)
42 FORMAT(1X,*AMOUNT AT TIME ZERO IN THE EXTRA VASCULAR POOL*,20X,*A(
  1*,I1,*)*,18X,F12.5)
44 FORMAT(1X,*AMOUNT AT TIME ZERO IN THE KIDNEY TUBULAR CELLS*,19X,*A
  1(*,I1,*)*,18X,F12.5)
46 FORMAT(//,7X,*WHERE*,10X,*TF1 - KIDNEY*,26X,*Q1 - BLLOD POOL*)
48 FORMAT(/,22X,*TF2 - BLADDER*,25X,*Q2 - EXTRA VASCULAR POOL*)
50 FORMAT(/,22X,*TF3 - BLOOD AND TISSUE*,16X,*Q3 - RIGHT KIDNEY TUBUL
  1AR CELLS*)
52 FORMAT(/,60X,*Q4 - KIDNEY ESTUARY*)
54 FORMAT(/,60X,*Q5 - BLADDER*)
   END
```

```
      SUBROUTINE PRAM2 (A,LL,PRMX,IGLOM)
C
C        THE SUBROUTINE PRAM2 PRINTS OUT A TABLE FOR THE PARAMETERS
C                AND GIVES THE FUNCTIONAL RELATIONSHIP BETWEEN THE
C                VARIOUS COMPARTMENTS AND THE TIME FUNCTIONS.
C
C            A      - THE PARAMETERS
C            LL     = 0  GIVES A HEADING  ***THE PARAMETERS ARE***
C                   = 1  GIVES A HEADING  ***INITIAL ESTIMATES FOR THE
C                        PARAMETERS***
C            PRMX   - SUBROUTINE WHICH PRINTS OUT THE FUNCTIONAL
C                        RELATIONSHIP BETWEEN THE TIME FUNCTIONS AND
C                        THE COMPARTMENTS
C            IGLOM  - IF IGLOM=1 THE MODEL HAS A PATH FOR GLOMERULAR
C                        FILTRATION
C
      DIMENSION A(32)
      IF (IGLOM.EQ.1) GO TO 10
      IDIF1=1
      IDIF2=2
      GO TO 12
   10 IDIF1=0
      IDIF2=0
   12 IF (LL) 16,14,16
   14 PRINT 20
      GO TO 18
   16 PRINT 22
   18 PRINT 24
      IF (IGLOM.EQ.1) PRINT 26, A(4)
      PRINT 28, A(3)
      IF (IGLOM.EQ.1) PRINT 30, A(7)
      I=6-IDIF1
      PRINT 32, I,A(I)
      PRINT 34
      I=5-IDIF1
      PRINT 36, I,A(I)
      I=13-IDIF2
      PRINT 38, I,A(I)
      PRINT 40
      I=8-IDIF2
      PRINT 42, I,A(I)
      I=14-IDIF2
      PRINT 44, I,A(I)
      PRINT 46, A(1)
      PRINT 48, A(2)
      I=9-IDIF2
      PRINT 50, I,A(I)
      I=10-IDIF2
      PRINT 52, I,A(I)
      I=11-IDIF2
      PRINT 54, I,A(I)
      I=12-IDIF2
      PRINT 56, I,A(I)
      CALL PRMX (A,IGLOM)
      PRINT 58
      PRINT 60
      PRINT 62
      PRINT 64
      PRINT 66
      PRINT 68
      PRINT 70
      RETURN
```

```
C
C
   20 FORMAT(1H1,52X,28H*****THE PARAMETERS ARE*****/)
   22 FORMAT(1H1,43X,46H*****INITIAL ESTIMATES FOR THE PARAMETERS*****/)
   24 FORMAT(1X,*PARAMETERS*,55X,*SYMBOL*,21X,*VALUE*)
   26 FORMAT(/,1X,*GLOMERULAR FILTRATION RATE(RIGHT KIDNEY)*,26X,*A(4)*,
     120X,F10.5)
   28 FORMAT(1X,*FLOW RATE FROM BLOOD POOL TO TUBULAR CELLS(RIGHT KIDNEY
     1)*,10X,*A(3)*,20X,F10.5)
   30 FORMAT(1X,*GLOMERULAR FILTRATION RATE(LEFT KIDNEY)*,27X,*A(7)*,20X
     1,F10.5)
   32 FORMAT(1X,*FLOW RATE FROM BLOOD POOL TO TUBULAR CELLS(LEFT KIDNEY)
     1*,11X,*A(*,I1,*)*,20X,F10.5)
   34 FORMAT(1X,*RIGHT KIDNEY*)
   36 FORMAT(4X,*TUBULAR CELL FLOW RATE*,41X,*A(*,I1,*)*,20X,F10.5)
   38 FORMAT(4X,*ESTUARY DELAY TIME*,45X,*A(*,I2*)*,19X,F10.5)
   40 FORMAT(1X,*LEFT KIDNEY*)
   42 FORMAT(4X,*TUBULAR CELL FLOW RATE*,41X,*A(*,I1,*)*,20X,F10.5)
   44 FORMAT(4X,*ESTUARY DELAY TIME*,45X,*A(*,I2,*)*,19X,F10.5)
   46 FORMAT(1X,*FLOW RATE FROM BLOOD POOL TO EXTRAVASCULAR POOL*,19X,*A
     1(1)*,20X,F10.5)
   48 FORMAT(1X,*FLOW RATE FROM EXTRAVASCULAR POOL TO BLOOD POOL*,19X,*A
     1(2)*,20X,F10.5)
   50 FORMAT(1X,*AMOUNT AT TIME ZERO IN THE BLOOD POOL*,29X,*A(*,I1,*)*,
     118X,F12.5)
   52 FORMAT(1X,*AMOUNT AT TIME ZERO IN THE EXTRA VASCULAR POOL*,20X,*A(
     1*,I2,*)*,17X,F12.5)
   54 FORMAT(1X,*AMOUNT AT TIME ZERO IN THE RIGHT KIDNEY TUBULAR CELLS*,
     113X,*A(*,I2,*)*,17X,F12.5)
   56 FORMAT(1X,*AMOUNT AT TIME ZERO IN THE LEFT KIDNEY TUBULAR CELLS*,1
     14X,*A(*,I2,*)*,17X,F12.5)
   58 FORMAT(//,7X,*WHERE*,10X,*TF1 - RIGHT KIDNEY*,20X,*Q1 - BLOOD POOL
     1*)
   60 FORMAT(/,22X,*TF2 - LEFT KIDNEY*,21X,*Q2 - EXTRA VASCULAR POOL*)
   62 FORMAT(/,22X,*TF3 - BLADDER*,25X,*Q3 - RIGHT KIDNEY TUBULAR CELLS*
     1)
   64 FORMAT(/,22X,*TF4 - BLOOD AND TISSUE*,16X,*Q4 - RIGHT KIDNEY ESTUA
     1RY*)
   66 FORMAT(/,60X,*Q5 - BLADDER*)
   68 FORMAT(/,60X,*Q6 - LEFT KIDNEY TUBULAR CELLS*)
   70 FORMAT(/,60X,*Q7 - LEFT KIDNEY ESTUARY*)
      END
```

```
      SUBROUTINE PRM11 (A,IGLOM)
C
C        THE SUBROUTINE PRM11 PRINTS OUT THE FUNCTIONAL RELATIONSHIP
C             BETWEEN THE TIME FUNCTIONS AND THE COMPARTMENT EQUATIONS.
C
C        THE TIME FUNCTIONS WITH GLOMERULAR FILTRATION
C
C                  TF1 = Q3 + Q4 + A(10)*(Q1 + Q2)
C                  TF2 =      Q5 + A(11)*(Q1 + Q2)
C                  TF3 =           A(12)*(Q1 + Q2)
C
C        THE TIME FUNCTIONS WITHOUT GLOMERULAR FILTRATION
C
C                  TF1 = Q3 + Q4 + A(9)*(Q1 + Q2)
C                  TF2 =      Q5 + A(10)*(Q1 + Q2)
C                  TF3 =           A(12)*(Q1 + Q2)
C
C                       TF1 - KIDNEY
C                       TF2 - BLADDER
C                       TF3 - BLOOD AND TISSUE
C
C          A     - PARAMETERS FOR THE KIDNEY MODEL
C          IGLOM - IF IGLOM=1 THE MODEL HAS A PATH FOR GLOMERULAR
C                    FILTRATION
C
      DIMENSION A(32)
      PRINT 14
      IF (IGLOM.EQ.1) GO TO 10
      GO TO 12
   10 PRINT 16, A(10)
      PRINT 18, A(11)
      PRINT 20, A(12)
      RETURN
C
   12 PRINT 22, A(9)
      PRINT 24, A(10)
      PRINT 26, A(11)
      RETURN
C
C
C
   14 FORMAT(/////,*FUNCTIONAL RELATIONSHIP BETWEEN THE TIMEFUNCTIONS AN
     1D THE COMPARTMENTS - *)
   16 FORMAT(/,1X,31HTF1 = Q3 + Q4 + A(10)*(Q1 + Q2),3H = ,10HQ3 + Q4 +
     1,F5.2,10H*(Q1 + Q2))
   18 FORMAT(/,1X,31HTF2 =      Q5 + A(11)*(Q1 + Q2),3H = ,10H     Q5 +
     1,F5.2,10H*(Q1 + Q2))
   20 FORMAT(/,1X,31HTF3 =           A(12)*(Q1 + Q2),3H = ,10X,F5.2,10H*
     1(Q1 + Q2))
   22 FORMAT(/,1X,31HTF1 = Q3 + Q4 +  A(9)*(Q1 + Q2),3H = ,10HQ3 + Q4 +
     1,F5.2,10H*(Q1 + Q2))
   24 FORMAT(/,1X,31HTF2 =      Q5 + A(10)*(Q1 + Q2),3H = ,10H     Q5 +
     1,F5.2,10H*(Q1 + Q2))
   26 FORMAT(/,1X,31HTF3 =           A(11)*(Q1 + Q2),3H = ,10X,F5.2,10H*
     1(Q1 + Q2))
      END
```

```
      SUBROUTINE PRM21 (A,IGLOM)
C
C        THE SUBROUTINE PRM21 PRINTS OUT THE FUNCTIONAL RELATIONSHIP
C             BETWEEN THE TIME FUNCTIONS AND THE COMPARTMENT EQUATIONS.
C
C        THE TIME FUNCTIONS WITH GLOMERULAR FILTRATION
C
C                  TF1 = A(15)*(Q3+Q4)+A(16)*Q1+A(17)*Q2+A(18)*Q5
C                  TF2 = A(19)*(Q6+Q7)+A(20)*Q1+A(21)*Q2+A(22)*Q5
C                  TF3 = A(24)*Q1+A(25)*Q2+A(23)*Q5
C                  TF4 = A(26)*Q1+A(27)*Q2+A(28)*Q5+A(29)*(Q3+Q4)
C                              +A(30)*(Q6+Q7)
C
C        THE TIME FUNCTIONS WITHOUT GLOMERULAR FILTRATION
C
C                  TF1 = A(13)*(Q3+Q4)+A(14)*Q1+A(15)*Q2+A(16)*Q5
C                  TF2 = A(17)*(Q6+Q7)+A(18)*Q1+A(19)*Q2+A(20)*Q5
C                  TF3 = A(22)*Q1+A(23)*Q2+A(21)*Q5
C                  TF4 = A(24)*Q1+A(25)*Q2+A(26)*Q5+A(27)*(Q3+Q4)
C                              +A(28)*(Q6+Q7)
C
C                       TF1 - RIGHT KIDNEY
C                       TF2 - LEFT KIDNEY
C                       TF3 - BLADDER
C                       TF4 - BLOOD AND TISSUE
C
C          A     - PARAMETERS FOR THE KIDNEY MODEL
C          IGLOM - IF IGLOM=1 THE MODEL HAS A PATH FOR GLOMERULAR
C                    FILTRATION
C
      DIMENSION A(32)
      PRINT 14
      IF (IGLOM.EQ.1) GO TO 10
      GO TO 12
   10 PRINT 16, A(15),A(16),A(17),A(18)
      PRINT 18, A(19),A(20),A(21),A(22)
      PRINT 20, A(24),A(25),A(23)
      PRINT 22
      PRINT 24, A(26),A(27),A(28),A(29),A(30)
      RETURN
C
   12 PRINT 26, A(13),A(14),A(15),A(16)
      PRINT 28, A(17),A(18),A(19),A(20)
      PRINT 30, A(22),A(23),A(21)
      PRINT 32
      PRINT 24, A(24),A(25),A(26),A(27),A(28)
      RETURN
C
C
C
   14 FORMAT(/////,*FUNCTIONAL RELATIONSHIP BETWEEN THE TIMEFUNCTIONS AN
     1D THE COMPARTMENTS - *)
   16 FORMAT(/,1X,54HTF1 = A(15)*(Q3 + Q4) + A(16)*Q1 + A(17)*Q2 + A(18)
     1*Q5,3H = ,F5.2,13H*(Q3 + Q4) + ,F5.2,6H*Q1 + ,F5.2,6H*Q2 + ,F5.2,3
     2H*Q5)
   18 FORMAT(/,1X,54HTF2 = A(19)*(Q6 + Q7) + A(20)*Q1 + A(21)*Q2 + A(22)
     1*Q5,3H = ,F5.2,13H*(Q6 + Q7) + ,F5.2,6H*Q1 + ,F5.2,6H*Q2 + ,F5.2,3
     2H*Q5)
   20 FORMAT(/,1X,52HTF3 =                    A(24)*Q1 + A(25)*Q2 + A(23)*Q
     15,3H = ,20X,F5.2,6H*Q1 + ,F5.2,6H*Q2 + ,F5.2,3H*Q5)
   22 FORMAT(/,1X,72HTF4 = A(26)*Q1 + A(27)*Q2 + A(28)*Q5 + A(29)*(Q3 +
     1Q4) + A(30)*(Q6 + Q7))
```

```
24 FORMAT(/,49X,2H= ,F5.2,6H*Q1 + ,F5.2,6H*Q2 + ,F5.2,6H*Q5 + ,F5.2,1
  13H*(Q3 + Q4) + ,F5.2,10H*(Q6 + Q7))
26 FORMAT(/,1X,54HTF1 = A(13)*(Q3 + Q4) + A(14)*Q1 + A(15)*Q2 + A(16)
  1*Q5,3H = ,F5.2,13H*(Q3 + Q4) + ,F5.2,6H*Q1 + ,F5.2,6H*Q2 + ,F5.2,3
  2H*Q5)
28 FORMAT(/,1X,54HTF2 = A(17)*(Q6 + Q7) + A(18)*Q1 + A(19)*Q2 + A(22)
  1*Q5,3H = ,F5.2,13H*(Q6 + Q7) + ,F5.2,6H*Q1 + ,F5.2,6H*Q2 + ,F5.2,3
  2H*Q5)
30 FORMAT(/,1X,52HTF3 =                    A(22)*Q1 + A(23)*Q2 + A(21)*Q
  15,3H = ,20X,F5.2,6H*Q1 + ,F5.2,6H*Q2 + ,F5.2,3H*Q5)
32 FORMAT(/,1X,72HTF4 = A(24)*Q1 + A(25)*Q2 + A(26)*Q5 + A(27)*(Q3 +
  1Q4) + A(28)*(Q6 + Q7))
   END
```

```
      SUBROUTINE PRM22 (A,IGLOM)
C
C        THE SUBROUTINE PRM22 PRINTS OUT THE FUNCTIONAL RELATIONSHIP
C             BETWEEN THE TIME FUNCTIONS AND THE COMPARTMENT EQUATIONS.
C
C        THE TIME FUNCTIONS WITH GLOMERULAR FILTRATION
C
C                 TF1 = Q3+Q4+A(15)*(Q1+Q2)+A(16)*Q5
C                 TF2 = Q6+Q7+A(17)*(Q1+Q2)+A(18)*Q5
C                 TF3 =        A(20)*(Q1+Q2)+A(19)*Q5
C                 TF4 = A(21)*(Q1+Q2)+A(22)*Q5+A(23)*(Q3+Q4)
C                            +A(24)*(Q6+Q7)
C
C        THE TIME FUNCTIONS WITHOUT GLOMERULAR FILTRATION
C
C                 TF1 = Q3+Q4+A(13)*(Q1+Q2)+A(14)*Q5
C                 TF2 = Q6+Q7+A(15)*(Q1+Q2)+A(16)*Q5
C                 TF3 =        A(18)*(Q1+Q2)+A(17)*Q5
C                 TF4 = A(19)*(Q1+Q2)+A(20)*Q5+A(21)*(Q3+Q4)
C                            +A(22)*(Q6+Q7)
C
C                      TF1 - RIGHT KIDNEY
C                      TF2 - LEFT KIDNEY
C                      TF3 - BLADDER
C                      TF4 - BLOOD AND TISSUE
C
C          A     - PARAMETERS FOR THE KIDNEY MODEL
C          IGLOM - IF IGLOM=1 THE MODEL HAS A PATH FOR GLOMERULAR
C                    FILTRATION
C
      DIMENSION A(32)
      PRINT 14
      IF (IGLOM.EQ.1) GO TO 10
      GO TO 12
   10 PRINT 16, A(15),A(16)
      PRINT 18, A(17),A(18)
      PRINT 20, A(20),A(19)
      PRINT 22
      PRINT 24, A(21),A(22),A(23),A(24)
      RETURN
C
   12 PRINT 26, A(13),A(14)
      PRINT 28, A(15),A(16)
      PRINT 30, A(18),A(17)
      PRINT 32
      PRINT 24, A(19),A(20),A(21),A(22)
      RETURN
C
C
C
   14 FORMAT(/////,*FUNCTIONAL RELATIONSHIP BETWEEN THE TIMEFUNCTIONS AN
     1D THE COMPARTMENTS - *)
   16 FORMAT(/,1X,42HTF1 = Q3 + Q4 + A(15)*(Q1 + Q2) + A(16)*Q5,3H = ,10
     1HQ3 + Q4 + ,F5.2,13H*(Q1 + Q2) + ,F5.2,3H*Q5)
   18 FORMAT(/,1X,42HTF2 = Q6 + Q7 + A(17)*(Q1 + Q2) + A(18)*Q5,3H = ,10
     1HQ6 + Q7 + ,F5.2,13H*(Q1 + Q2) + ,F5.2,3H*Q5)
   20 FORMAT(/,1X,42HTF3 =            A(20)*(Q1 + Q2) + A(19)*Q5,3H = ,10
     1X,F5.2,13H*(Q1 + Q2) + ,F5.2,3H*Q5)
   22 FORMAT(/,1X,68HTF4 = A(21)*(Q1 + Q2) + A(22)*Q5 + A(23)*(Q3 + Q4)
     1+ A(24)*(Q6 + Q7))
   24 FORMAT(/,45X,2H= ,F5.2,13H*(Q1 + Q2) + ,F5.2,6H*Q5 + ,F5.2,13H*(Q3
     1 + Q4) + ,F5.2,10H*(Q6 + Q7))
```

```
26 FORMAT(/,1X,42HTF1 = Q3 + Q4 + A(13)*(Q1 + Q2) + A(14)*Q5,3H = ,10
  1HQ3 + Q4 + ,F5.2,13H*(Q1 + Q2) + ,F5.2,3H*Q5)
28 FORMAT(/,1X,42HTF2 = Q6 + Q7 + A(15)*(Q1 + Q2) + A(16)*Q5,3H = ,10
  1HQ6 + Q7 + ,F5.2,13H*(Q1 + Q2) + ,F5.2,3H*Q5)
30 FORMAT(/,1X,42HTF3 =            A(18)*(Q1 + Q2) + A(17)*Q5,3H = ,10
  1X,F5.2,13H*(Q1 + Q2) + ,F5.2,3H*Q5)
32 FORMAT(/,1X,68HTF4 = A(19)*(Q1 + Q2) + A(20)*Q5 + A(21)*(Q3 + Q4)
  1+ A(22)*(Q6 + Q7))
   END
```

```
      SUBROUTINE PRM23 (A,IGLOM)
C
C        THE SUBROUTINE PRM23 PRINTS OUT THE FUNCTIONAL RELATIONSHIP
C             BETWEEN THE TIME FUNCTIONS AND THE COMPARTMENT EQUATIONS.
C
C        THE TIME FUNCTIONS WITH GLOMERULAR FILTRATION
C
C                  TF1 = A(15)*Q3+A(16)*Q4+A(17)*(Q1+Q2)+A(18)*Q5
C                  TF2 = A(19)*Q6+A(20)*Q7+A(21)*(Q1+Q2)+A(22)*Q5
C                  TF3 = A(23)*Q5+A(24)*(Q1+Q2)
C                  TF4 = A(25)*(Q1+Q2)+A(26)*Q5+A(27)*Q3+A(28)*Q4
C                            +A(29)*Q6+A(30)*Q7
C
C        THE TIME FUNCTIONS WITHOUT GLOMERULAR FILTRATION
C
C                  TF1 = A(13)*Q3+A(14)*Q4+A(15)*(Q1+Q2)+A(16)*Q5
C                  TF2 = A(17)*Q6+A(18)*Q7+A(19)*(Q1+Q2)+A(20)*Q5
C                  TF3 = A(21)*Q5+A(22)*(Q1+Q2)
C                  TF4 = A(23)*(Q1+Q2)+A(24)*Q5+A(25)*Q3+A(26)*Q4
C                            +A(27)*Q6+A(28)*Q7
C
C                       TF1 - RIGHT KIDNEY
C                       TF2 - LEFT KIDNEY
C                       TF3 - BLADDER
C                       TF4 - BLOOD AND TISSUE
C
C          A     - PARAMETERS FOR THE KIDNEY MODEL
C          IGLOM - IF IGLOM=1 THE MODEL HAS A PATH FOR GLOMERULAR
C                    FILTRATION
C
      DIMENSION A(32)
      PRINT 14
      IF (IGLOM.EQ.1) GO TO 10
      GO TO 12
   10 PRINT 16, A(15),A(16),A(17),A(18)
      PRINT 18, A(19),A(20),A(21),A(22)
      PRINT 20, A(24),A(23)
      PRINT 22
      PRINT 24, A(25),A(26),A(27),A(28),A(29),A(30)
      RETURN
C
   12 PRINT 26, A(13),A(14),A(15),A(16)
      PRINT 28, A(17),A(18),A(19),A(20)
      PRINT 30, A(22),A(21)
      PRINT 32
      PRINT 24, A(23),A(24),A(25),A(26),A(27),A(28)
      RETURN
C
C
C
   14 FORMAT(/////,*FUNCTIONAL RELATIONSHIP BETWEEN THE TIMEFUNCTIONS AN
     1D THE COMPARTMENTS - *)
   16 FORMAT(/,1X,54HTF1 = A(15)*Q3 + A(16)*Q4 + A(17)*(Q1 + Q2) + A(18)
     1*Q5,3H = ,F5.2,6H*Q3 + ,F5.2,6H*Q4 + ,F5.2,13H*(Q1 + Q2) + ,F5.2,3
     2H*Q5)
   18 FORMAT(/,1X,54HTF2 = A(19)*Q6 + A(20)*Q7 + A(21)*(Q1 + Q2) + A(22)
     1*Q5,3H = ,F5.2,6H*Q6 + ,F5.2,6H*Q7 + ,F5.2,13H*(Q1 + Q2) + ,F5.2,3
     2H*Q5)
   20 FORMAT(/,1X,54HTF3 =                          A(24)*(Q1 + Q2) + A(23)
     1*Q5,3H = ,22X,F5.2,13H*(Q1 + Q2) + ,F5.2,3H*Q5)
   22 FORMAT(/,1X,76HTF4 = A(25)*(Q1 + Q2) + A(26)*Q5 + A(27)*Q3 + A(28)
     1*Q4 + A(29)*Q6 + A(30)*Q7)
```

```
24 FORMAT(/,49X,2H= ,F5.2,13H*(Q1 + Q2) + ,F5.2,6H*Q5 + ,F5.2,6H*Q3 +
  1 ,F5.2,6H*Q4 + ,F5.2,6H*Q6 + ,F5.2,3H*Q7)
26 FORMAT(/,1X,54HTF1 = A(13)*Q3 + A(14)*Q4 + A(15)*(Q1 + Q2) + A(16)
  1*Q5,3H = ,F5.2,6H*Q3 + ,F5.2,6H*Q4 + ,F5.2,13H*(Q1 + Q2) + ,F5.2,3
  2H*Q5)
28 FORMAT(/,1X,54HTF2 = A(17)*Q6 + A(18)*Q7 + A(19)*(Q1 + Q2) + A(20)
  1*Q5,3H = ,F5.2,6H*Q6 + ,F5.2,6H*Q7 + ,F5.2,13H*(Q1 + Q2) + ,F5.2,3
  2H*Q5)
30 FORMAT(/,1X,54HTF3 =                          A(22)*(Q1 + Q2) + A(21)
  1*Q5,3H = ,22X,F5.2,13H*(Q1 + Q2) + ,F5.2,3H*Q5)
32 FORMAT(/,1X,76HTF4 = A(23)*(Q1 + Q2) + A(24)*Q5 + A(25)*Q3 + A(26)
  1*Q4 + A(27)*Q6 + A(28)*Q7)
   END
```

```
      SUBROUTINE PRM24 (A,IGLOM)
C
C        THE SUBROUTINE PRM24 PRINTS OUT THE FUNCTIONAL RELATIONSHIP
C             BETWEEN THE TIME FUNCTIONS AND THE COMPARTMENT EQUATIONS.
C
C
C        THE TIME FUNCTIONS WITH GLOMERULAR FILTRATION
C
C                  TF1 = A(15)*Q3+A(16)*Q4+A(17)*Q1+A(18)*Q2
C                              +A(19)*Q5
C                  TF2 = A(15)*Q6+A(16)*Q7+A(20)*Q1+A(21)*Q2
C                              +A(22)*Q5
C                  TF3 = A(24)*Q1+A(25)*Q2+A(23)*Q5
C                  TF4 = A(26)*Q1+A(27)*Q2+A(28)*Q5+A(29)*(Q3+Q4)
C                              +A(30)*(Q6+Q7)
C
C        THE TIME FUNCTIONS WITHOUT GLOMERULAR FILTRATION
C
C                  TF1 = A(13)*Q3+A(14)*Q4+A(15)*Q1+A(16)*Q2
C                              +A(17)*Q5
C                  TF2 = A(13)*Q6+A(14)*Q7 A(18)*Q1+A(19)*Q2
C                              +A(20)*Q5
C                  TF3 = A(22)*Q1+A(23)*Q2+A(21)*Q5
C                  TF4 = A(24)*Q1+A(25)*Q2+A(26)*Q5+A(29)*(Q3+Q4)
C                              +A(28)*(Q6+Q7)
C
C                       TF1 - RIGHT KIDNEY
C                       TF2 - LEFT KIDNEY
C                       TF3 - BLADDER
C                       TF4 - BLOOD AND TISSUE
C
C          A     - PARAMETERS FOR THE KIDNEY MODEL
C          IGLOM - IF IGLOM=1 THE MODEL HAS A PATH FOR GLOMERULAR
C                    FILTRATION
C
      DIMENSION A(32)
      PRINT 14
      IF (IGLOM.EQ.1) GO TO 10
      GO TO 12
   10 PRINT 16, A(15),A(16),A(17),A(18),A(19)
      PRINT 18, A(15),A(16),A(20),A(21),A(22)
      PRINT 20, A(24),A(25),A(23)
      PRINT 22
      PRINT 24, A(26),A(27),A(28),A(29),A(30)
      RETURN
C
   12 PRINT 26, A(13),A(14),A(15),A(16),A(17)
      PRINT 28, A(13),A(14),A(18),A(19),A(20)
      PRINT 30, A(22),A(23),A(21)
      PRINT 32
      PRINT 24, A(24),A(25),A(26),A(27),A(28)
      RETURN
C
C
C
   14 FORMAT(/////,*FUNCTIONAL RELATIONSHIP BETWEEN THE TIMEFUNCTIONS AN
     1D THE COMPARTMENTS - *)
   16 FORMAT(/,1X,58HTF1 = A(15)*Q3 + A(16)*Q4 + A(17)*Q1 + A(18)*Q2 + A
     1(19)*Q5,3H = ,F5.2,6H*Q3 + ,F5.2,6H*Q4 + ,F5.2,6H*Q1 + ,F5.2,6H*Q2
     2 + ,F5.2,3H*Q5)
   18 FORMAT(/,1X,58HTF2 = A(15)*Q6 + A(16)*Q7 + A(20)*Q1 + A(21)*Q2 + A
     1(22)*Q5,3H = ,F5.2,6H*Q6 + ,F5.2,6H*Q7 + ,F5.2,6H*Q1 + ,F5.2,6H*Q2
```

```
  2 + ,F5.2,3H*Q5)
20 FORMAT(/,1X,58HTF3 =                          A(24)*Q1 + A(25)*Q2 + A
  1(23)*Q5,3H = ,22X,F5.2,6H*Q1 + ,F5.2,6H*Q2 + ,F5.2,3H*Q5)
22 FORMAT(/,1X,72HTF4 = A(26)*Q6 + A(27)*Q2 + A(28)*Q5 + A(29)*(Q3 +
  1Q4) + A(30)*(Q6 + Q7))
24 FORMAT(/,49X,2H= ,F5.2,6H*Q1 + ,F5.2,6H*Q2 + ,F5.2,6H*Q5 + ,F5.2,1
  13H*(Q3 + Q4) + ,F5.2,10H*(Q6 + Q7))
26 FORMAT(/,1X,58HTF1 = A(13)*Q3 + A(14)*Q4 + A(15)*Q1 + A(16)*Q2 + A
  1(17)*Q5,3H = ,F5.2,6H*Q3 + ,F5.2,6H*Q4 + ,F5.2,6H*Q1 + ,F5.2,6H*Q2
  2 + ,F5.2,3H*Q5)
28 FORMAT(/,1X,58HTF2 = A(13)*Q6 + A(14)*Q7 + A(18)*Q1 + A(19)*Q2 + A
  1(20)*Q5,3H = ,F5.2,6H*Q6 + ,F5.2,6H*Q7 + ,F5.2,6H*Q1 + ,F5.2,6H*Q2
  2 + ,F5.2,3H*Q5)
30 FORMAT(/,1X,58HTF3 =                          A(22)*Q1 + A(23)*Q2 + A
  1(21)*Q5,3H = ,22X,F5.2,6H*Q1 + ,F5.2,6H*Q2 + ,F5.2,3H*Q5)
32 FORMAT(/,1X,72HTF4 = A(24)*Q6 + A(25)*Q2 + A(26)*Q5 + A(27)*(Q3 +
  1Q4) + A(28)*(Q6 + Q7))
   END
```

```
      SUBROUTINE PRM25 (A,IGLOM)
C
C        THE SUBROUTINE PRM25 PRINTS OUT THE FUNCTIONAL RELATIONSHIP
C             BETWEEN THE TIME FUNCTIONS AND THE COMPARTMENT EQUATIONS.
C
C        THE TIME FUNCTIONS WITH GLOMERULAR FILTRATION
C
C                  TF1 = Q3+Q4+A(15)*(Q1+Q2)
C                  TF2 = Q6+Q7+A(16)*(Q1+Q2)
C                  TF3 = Q5+A(17)*(Q1+Q2)
C                  TF4 = A(18)*(Q1+Q2)+A(19)*(Q3+Q4)+A(20)*(Q6+Q7)
C                            +A(21)*Q5
C
C        THE TIME FUNCTIONS WITHOUT GLOMERULAR FILTRATION
C
C                  TF1 = Q3+Q4+A(13)*(Q1+Q2)
C                  TF2 = Q6+Q7+A(14)*(Q1+Q2)
C                  TF3 = Q5+A(15)*(Q1+Q2)
C                  TF4 = A(16)*(Q1+Q2)+A(17)*(Q3+Q4)+A(18)*(Q6+Q7)
C                            +A(19)*Q5
C
C                       TF1 - RIGHT KIDNEY
C                       TF2 - LEFT KIDNEY
C                       TF3 - BLADDER
C                       TF4 - BLOOD AND TISSUE
C
C          A     - PARAMETERS FOR THE KIDNEY MODEL
C          IGLOM - IF IGLOM=1 THE MODEL HAS A PATH FOR GLOMERULAR
C                    FILTRATION
C
      DIMENSION A(32)
      PRINT 14
      IF (IGLOM.EQ.1) GO TO 10
      GO TO 12
   10 PRINT 16, A(15)
      PRINT 18, A(16)
      PRINT 20, A(17)
      PRINT 22
      PRINT 24, A(18),A(19),A(20),A(21)
      RETURN
C
   12 PRINT 26, A(13)
      PRINT 28, A(14)
      PRINT 30, A(15)
      PRINT 32
      PRINT 24, A(16),A(17),A(18),A(19)
      RETURN
C
C
C
   14 FORMAT(/////,*FUNCTIONAL RELATIONSHIP BETWEEN THE TIMEFUNCTIONS AN
     1D THE COMPARTMENTS - *)
   16 FORMAT(/,1X,31HTF1 = Q3 + Q4 + A(15)*(Q1 + Q2),5X,3H = ,10HQ3 + Q4
     1 + ,F5.2,10H*(Q1 + Q2))
   18 FORMAT(/,1X,31HTF2 = Q6 + Q7 + A(16)*(Q1 + Q2),5X,3H = ,10HQ6 + Q7
     1 + ,F5.2,10H*(Q1 + Q2))
   20 FORMAT(/,1X,36HTF3 =            A(17)*(Q1 + Q2) + Q5,3H = ,10X,F5.2
     1,15H*(Q1 + Q2) + Q5)
   22 FORMAT(/,1X,68HTF4 = A(18)*(Q1 + Q2) + A(19)*(Q3 + Q4) + A(20)*(Q6
     1 + Q7) + A(21)*Q5)
   24 FORMAT(/,39X,2H= ,F5.2,13H*(Q1 + Q2) + ,F5.2,13H*(Q3 + Q4) + ,F5.2
     1,13H*(Q6 + Q7) + ,F5.2,3H*Q5)
```

```
26 FORMAT(/,1X,31HTF1 = Q3 + Q4 + A(13)*(Q1 + Q2),5X,3H = ,10HQ3 + Q4
  1 + ,F5.2,10H*(Q1 + Q2))
28 FORMAT(/,1X,31HTF2 = Q6 + Q7 + A(14)*(Q1 + Q2),5X,3H = ,10HQ6 + Q7
  1 + ,F5.2,10H*(Q1 + Q2))
30 FORMAT(/,1X,36HTF3 =            A(15)*(Q1 + Q2) + Q5,3H = ,10X,F5.2
  1,15H*(Q1 + Q2) + Q5)
32 FORMAT(/,1X,68HTF4 = A(16)*(Q1 + Q2) + A(17)*(Q3 + Q4) + A(18)*(Q6
  1 + Q7) + A(19)*Q5)
   END
```

```
      SUBROUTINE PRM26 (A,IGLOM)
C
C        THE SUBROUTINE PRM26 PRINTS OUT THE FUNCTIONAL RELATIONSHIP
C             BETWEEN THE TIME FUNCTIONS AND THE COMPARTMENT EQUATIONS.
C
C        THE TIME FUNCTIONS WITH GLOMERULAR FILTRATION
C
C                    TF1 = Q3+A(15)*Q4+A(16)*(Q1+Q2)+A(17)*Q5
C                    TF2 = Q6+A(18)*Q7+A(19)*(Q1+Q2)+A(20)*Q5
C                    TF3 = A(22)*Q5+A(21)*(Q1+Q2)
C                    TF4 = A(23)*(Q1+Q2)+A(24)*Q4+A(25)*Q7+A(26)*Q5
C
C        THE TIME FUNCTIONS WITHOUT GLOMERULAR FILTRATION
C
C                   TF1 = Q3+A(13)*Q4+A(14)*(Q1+Q2)+A(15)*Q5
C                   TF2 = Q6+A(16)*Q7+A(17)*(Q1+Q2)+A(18)*Q5
C                   TF3 = A(20)*Q5+A(19)*(Q1+Q2)
C                   TF4 = A(21)*(Q1+Q2)+A(22)*Q4+A(23)*Q7+A(24)*Q5
C
C                         TF1 - RIGHT KIDNEY
C                         TF2 - LEFT KIDNEY
C                         TF3 - BLADDER
C                         TF4 - BLOOD AND TISSUE
C
C          A     - PARAMETERS FOR THE KIDNEY MODEL
C          IGLOM - IF IGLOM=1 THE MODEL HAS A PATH FOR GLOMERULAR
C                    FILTRATION
C
      DIMENSION A(32)
      PRINT 14
      IF (IGLOM.EQ.1) GO TO 10
      GO TO 12
   10 PRINT 16, A(15),A(16),A(17)
      PRINT 18, A(18),A(19),A(20)
      PRINT 20, A(21),A(22)
      PRINT 22, A(24),A(25),A(23),A(26)
      RETURN
C
   12 PRINT 24, A(13),A(14),A(15)
      PRINT 26, A(16),A(17),A(18)
      PRINT 28, A(19),A(20)
      PRINT 30, A(22),A(23),A(21),A(24)
      RETURN
C
C
C
   14 FORMAT(/////,*FUNCTIONAL RELATIONSHIP BETWEEN THE TIMEFUNCTIONS AN
     1D THE COMPARTMENTS - *)
   16 FORMAT(/,1X,48HTF1 = Q3 + A(15)*Q4 + A(16)*(Q1 + Q2) + A(17)*Q5,3H
     1 = ,5HQ3 + ,F5.2,6H*Q4 + ,F5.2,13H*(Q1 + Q2) + ,F5.2,3H*Q5)
   18 FORMAT(/,1X,48HTF2 = Q6 + A(18)*Q7 + A(19)*(Q1 + Q2) + A(20)*Q5,3H
     1 = ,5HQ6 + ,F5.2,6H*Q7 + ,F5.2,13H*(Q1 + Q2) + ,F5.2,3H*Q5)
   20 FORMAT(/,1X,48HTF3 =                    A(21)*(Q1 + Q2) + A(22)*Q5,3H
     1 = ,16X,F5.2,13H*(Q1 + Q2) + ,F5.2,3H*Q5)
   22 FORMAT(/,1X,54HTF4 = A(24)*Q4 + A(25)*Q7 + A(23)*(Q1 + Q2) + A(26)
     1*Q5,3H = ,F5.2,6H*Q4 + ,F5.2,6H*Q7 + ,F5.2,13H*(Q1 + Q2) + ,F5.2,3
     2H*Q5)
   24 FORMAT(/,1X,48HTF1 = Q3 + A(13)*Q4 + A(14)*(Q1 + Q2) + A(15)*Q5,3H
     1 = ,5HQ3 + ,F5.2,6H*Q4 + ,F5.2,13H*(Q1 + Q2) + ,F5.2,3H*Q5)
   26 FORMAT(/,1X,48HTF2 = Q6 + A(16)*Q7 + A(17)*(Q1 + Q2) + A(18)*Q5,3H
     1 = ,5HQ6 + ,F5.2,6H*Q7 + ,F5.2,13H*(Q1 + Q2) + ,F5.2,3H*Q5)
   28 FORMAT(/,1X,48HTF3 =                    A(19)*(Q1 + Q2) + A(20)*Q5,3H
```

```
  1 = ,16X,F5.2,13H*(Q1 + Q2) + ,F5.2,3H*Q5)
30 FORMAT(/,1X,54HTF4 = A(22)*Q4 + A(23)*Q7 + A(21)*(Q1 + Q2) + A(24)
  1*Q5,3H = ,F5.2,6H*Q4 + ,F5.2,6H*Q7 + ,F5.2,13H*(Q1 + Q2) + ,F5.2,3
  2H*Q5)
   END
```

```
      SUBROUTINE PRM27 (A,IGLOM)
C
C        THE SUBROUTINE PRM27 PRINTS OUT THE FUNCTIONAL RELATIONSHIP
C             BETWEEN THE TIME FUNCTIONS AND THE COMPARTMENT EQUATIONS.
C
C        THE TIME FUNCTIONS WITH GLOMERULAR FILTRATION
C
C                  TF1 = Q3 + Q4 + A(15)*(Q1 + Q2)
C                  TF2 = Q6 + Q7 + A(16)*(Q1 + Q2)
C                  TF3 =      Q5 + A(17)*(Q1 + Q2)
C                  TF4 = A(18)*(Q1 + Q2)
C
C        THE TIME FUNCTIONS WITHOUT GLOMERULAR FILTRATION
C
C                  TF1 = Q3 + Q4 + A(13)*(Q1 + Q2)
C                  TF2 = Q6 + Q7 + A(14)*(Q1 + Q2)
C                  TF3 =      Q5 + A(15)*(Q1 + Q2)
C                  TF4 = A(16)*(Q1 + Q2)
C
C                       TF1 - RIGHT KIDNEY
C                       TF2 - LEFT KIDNEY
C                       TF3 - BLADDER
C                       TF4 - BLOOD AND TISSUE
C
C          A      - PARAMETERS FOR THE KIDNEY MODEL
C          IGLOM - IF IGLOM=1 THE MODEL HAS A PATH FOR GLOMERULAR
C                    FILTRATION
C
      DIMENSION A(32)
      PRINT 14
      IF (IGLOM.EQ.1) GO TO 10
      GO TO 12
   10 PRINT 16, A(15)
      PRINT 18, A(16)
      PRINT 20, A(17)
      PRINT 22, A(18)
      RETURN
C
   12 PRINT 24, A(13)
      PRINT 26, A(14)
      PRINT 28, A(15)
      PRINT 30, A(16)
      RETURN
C
C
C
   14 FORMAT(/////,*FUNCTIONAL RELATIONSHIP BETWEEN THE TIMEFUNCTIONS AN
     1D THE COMPARTMENTS - *)
   16 FORMAT(/,1X,31HTF1 = Q3 + Q4 + A(15)*(Q1 + Q2),3H = ,10HQ3 + Q4 +
     1,F5.2,10H*(Q1 + Q2))
   18 FORMAT(/,1X,31HTF2 = Q6 + Q7 + A(16)*(Q1 + Q2),3H = ,10HQ6 + Q7 +
     1,F5.2,10H*(Q1 + Q2))
   20 FORMAT(/,1X,31HTF3 =      Q5 + A(17)*(Q1 + Q2),3H = ,10H     Q5 +
     1,F5.2,10H*(Q1 + Q2))
   22 FORMAT(/,1X,31HTF4 =           A(18)*(Q1 + Q2),3H = ,10X,F5.2,10H*
     1(Q1 + Q2))
   24 FORMAT(/,1X,31HTF1 = Q3 + Q4 + A(13)*(Q1 + Q2),3H = ,10HQ3 + Q4 +
     1,F5.2,10H*(Q1 + Q2))
   26 FORMAT(/,1X,31HTF2 = Q6 + Q7 + A(14)*(Q1 + Q2),3H = ,10HQ6 + Q7 +
     1,F5.2,10H*(Q1 + Q2))
   28 FORMAT(/,1X,31HTF3 =      Q5 + A(15)*(Q1 + Q2),3H = ,10H     Q5 +
     1,F5.2,10H*(Q1 + Q2))
```

```
30 FORMAT(/,1X,31HTF4 =          A(16)*(Q1 + Q2),3H = ,10X,F5.2,10H*
  1(Q1 + Q2))
   END
```

```
      SUBROUTINE PRM28 (A,IGLOM)
C
C        THE SUBROUTINE PRM28 PRINTS OUT THE FUNCTIONAL RELATIONSHIP
C             BETWEEN THE TIME FUNCTIONS AND THE COMPARTMENT EQUATIONS.
C
C        THE TIME FUNCTIONS WITH GLOMERULAR FILTRATION
C
C                  TF1 = Q3+Q4+D1*(Q6+Q7)+(A(15)+D1*A(17))*(Q1+Q2)
C                            +(A(16)+D1*A(18))*Q5
C                  TF2 = Q6+Q7+D2*(Q3+Q4)+(A(17)+D2*A(15))*(Q1+Q2)
C                            +(A(18)+D2*A(16))*Q5
C                  TF3 = A(19)*Q5+A(20)*(Q3+Q4)+A(21)*(Q6+Q7)
C                            +A(22)*(Q1+Q2)
C                  TF4 = A(23)*(Q1+Q2)+A(24)*(Q3+Q4)+A(25)*(Q6+Q7)
C                            +A(26)*Q5
C
C        THE TIME FUNCTIONS WITHOUT GLOMERULAR FILTRATION
C
C                  TF1 = Q3+Q4+D1*(Q6+Q7)+(A(13)+D1*A(15))*(Q1+Q2)
C                            +(A(14)+D1*A(16))*Q5
C                  TF2 = Q6+Q7+D2*(Q3+Q4)+(A(15)+D2*A(13))*(Q1+Q2)
C                            +(A(16)+D2*A(14))*Q5
C                  TF3 = A(17)*Q5+A(18)*(Q3+Q4)+A(19)*(Q6+Q7)
C                            +A(20)*(Q1+Q2)
C                  TF4 = A(21)*(Q1+Q2)+A(22)*(Q3+Q4)+A(23)*(Q6+Q7)
C                            +A(24)*Q5
C
C                       TF1 - RIGHT KIDNEY
C                       TF2 - LEFT KIDNEY
C                       TF3 - BLADDER
C                       TF4 - BLOOD AND TISSUE
C
C                THIS IS THE ADAC MODEL(J. A. DEGRAZIA, P. O. SCHEIBE,
C                ET AL., CLINICAL APPLICATIONS OF KINETIC MODEL OF
C                HIPPURATE DISTRIBUTION AND RENAL CLEARANCE, J. NUCL.
C                MED., 15(1974), PP 102-114).
C
C          A      - PARAMETERS FOR THE KIDNEY MODEL
C          IGLOM  - IF IGLOM=1 THE MODEL HAS A PATH FOR GLOMERULAR
C                     FILTRATION
C
      DIMENSION A(32)
      DATA D1,D2/.05,.08/
      PRINT 14
      IF (IGLOM.EQ.1) GO TO 10
      GO TO 12
   10 PRINT 16
      PRINT 18, D1,A(15),D1,A(17),A(16),D1,A(18)
      PRINT 20
      PRINT 22, D2,A(17),D2,A(15),A(18),D2,A(16)
      PRINT 24
      PRINT 26, A(19),A(20),A(21),A(22)
      PRINT 28
      PRINT 30, A(23),A(24),A(25),A(26)
      RETURN
C
   12 PRINT 32
      PRINT 18, D1,A(13),D1,A(15),A(14),D1,A(16)
      PRINT 34
      PRINT 22, D2,A(15),K2,A(13),A(16),D2,A(14)
      PRINT 36
      PRINT 26, A(17),A(18),A(19),A(20)
```

```
      PRINT 38
      PRINT 30, A(21),A(22),A(23),A(24)
      RETURN
C
C
C
   14 FORMAT(/////,*FUNCTIONAL RELATIONSHIP BETWEEN THE TIMEFUNCTIONS AN
     1D THE COMPARTMENTS - *)
   16 FORMAT(/,1X,83HTF1 = Q3 + Q4 + D1*(Q6 + Q7) + (A(15) + D1*A(17))*(
     1Q1 + Q2) + (A(16) + D1*A(18))*Q5)
   18 FORMAT(/,40X,2H= ,10HQ3 + Q4 + ,F5.2,14H*(Q6 + Q7) + (,F5.2,3H + ,
     1F5.2,1H*,F5.2,15H)*(Q1 + Q2) + (,F5.2,3H + ,F5.2,1H*,F5.2,4H)*Q5)
   20 FORMAT(/,1X,83HTF2 = Q6 + Q7 + D2*(Q3 + Q4) + (A(17) + D2*A(15))*(
     1Q1 + Q2) + (A(18) + D2*A(16))*Q5)
   22 FORMAT(/,40X,2H= ,10HQ6 + Q7 + ,F5.2,14H*(Q3 + Q4) + (,F5.2,3H + ,
     1F5.2,1H*,F5.2,15H)*(Q1 + Q2) + (,F5.2,3H + ,F5.2,1H*,F5.2,4H)*Q5)
   24 FORMAT(/,1X,68HTF3 = A(19)*Q5 + A(20)*(Q3 + Q4) + A(21)*(Q6 + Q7)
     1+ A(22)*(Q1 + Q2))
   26 FORMAT(/,40X,2H= ,F5.2,6H*Q5 + ,F5.2,13H*(Q3 + Q4) + ,F5.2,13H*(Q6
     1 + Q7) + ,F5.2,10H*(Q1 + Q2))
   28 FORMAT(/,1X,68HTF4 = A(23)*(Q1 + Q2) + A(24)*(Q3 + Q4) + A(25)*(Q6
     1 + Q7) + A(26)*Q5)
   30 FORMAT(/,40X,2H= ,F5.2,13H*(Q1 + Q2) + ,F5.2,13H*(Q3 + Q4) + ,F5.2
     1,13H*(Q6 + Q7) + ,F5.2,3H*Q5)
   32 FORMAT(/,1X,83HTF1 = Q3 + Q4 + D1*(Q6 + Q7) + (A(13) + D1*A(15))*(
     1Q1 + Q2) + (A(14) + D1*A(16))*Q5)
   34 FORMAT(/,1X,83HTF2 = Q6 + Q7 + D2*(Q3 + Q4) + (A(15) + D2*A(13))*(
     1Q1 + Q2) + (A(16) + D2*A(14))*Q5)
   36 FORMAT(/,1X,68HTF3 = A(17)*Q5 + A(18)*(Q3 + Q4) + A(19)*(Q6 + Q7)
     1+ A(20)*(Q1 + Q2))
   38 FORMAT(/,1X,68HTF4 = A(21)*(Q1 + Q2) + A(22)*(Q3 + Q4) + A(23)*(Q6
     1 + Q7) + A(24)*Q5)
      END
```

```
      SUBROUTINE SOLUT (A,NAME,IDATE,TIME,PRAM,PRMX,CHI,TF,PAR,PARX,FLOW
     1,MATX,IGLOM)
C
C            THE SUBROUTINE SOLUT PRINTS OUT THE FINAL SOLUTION ALONG
C                 WITH THE RESULT OF A GOODNESS OF FIT TEST.  ALSO
C                 PRINTED OUT IS A LISTING OF THE FITTED DATA, A PLOT
C                 OF THE TIME FUNCTIONS, AND A FLOW DIAGRAM FOR THE
C                 KIDNEY MODEL.
C
C             A      - THE PARAMETERS FOR THE KIDNEY MODEL
C             NAME   - NAME OF THE PATIENT
C             IDATE  - DATE OF THE STUDY
C             TIME   - TIME INTERVAL IN SECONDS
C             PRAM   - SUBROUTINE WHICH LISTS THE PARAMETERS
C             PRMX   - SUBROUTINE WHICH PRINTS THE FUNCTIONAL RELATION-
C                        SHIP BETWEEN THE TIME FUNCTIONS AND THE
C                        COMPARTMENTS
C             CHI    - SUBROUTINE WHICH EVALUATES THE CHI-SQUARE
C             TF     - SUBROUTINE WHICH GENERATES THE TIME FUNCTIONS
C             PAR    - SUBROUTINE OF PARITIAL DERIVATIVES
C             PARX   - SUBROUTINE OF PARTIAL DERIVATIVES FOR THE TIME
C                        FUNCTIONS
C             FLOW   - SUBROUTINE WHICH PRINTS A FLOW DIAGRAM OF THE
C                        KIDNEY MODEL
C             MATX   - SUBROUTINE WHICH PRINTS THE MATRIX WHICH RELATES
C                        THE TIME FUNCTIONS TO THE COMPARTMENTS
C             IGLOM  - IF IGLOM=1 THE MODEL HAS A PATH FOR GLOMERULAR
C                        FILTRATION
C
      DIMENSION B(32,64),Z(32),NAME(20),IDATE(23),A(32),D(32)
      EXTERNAL PARX,TF,MATX
      COMMON/FNT/T(150),R(600),H(600)
      COMMON/CONST/N,N1,M,M1
      CALL PRAM (A,0,PRMX,IGLOM)
      CALL CHI (A,HF,TF)
      CALL PAR (A,B,PARX,1)
      PRINT 44
      PRINT 46, HF
      XNOM=2.32667
      ZE=(XNOM+SQRT(FLOAT(2*N1*N-1)))**2/2.
      PRINT 48
      PRINT 50
      PRINT 52, ZE
      PRINT 54
      IF (HF-ZE) 12,12,10
   10 PRINT 56
      GO TO 14
   12 PRINT 58
   14 DO 16 I=1,M
      D(I)=B(I,I)
   16 CONTINUE
      N2=0
      DO 18 I=1,M
      N2=N2+1
      DO 18 J=1,N2
      B(I,J)=B(I,J)/SQRT(D(I)*D(J))
      B(J,I)=B(I,J)
   18 CONTINUE
      CALL INVPD (B,1,M,Z)
      N2=M
      M1=M+1
      DO 20 I=1,M
```

```
      N2=N2+1
      DO 20 J=M1,N2
      K=J-M
      B(I,J)=B(I,J)/SQRT(D(I)*D(K))
      B(K,I+M)=B(I,J)
   20 CONTINUE
      PRINT 62
      N2=M
      DO 22 I=1,M
      N2=N2+1
      PRINT 64, (B(I,J),J=M1,N2)
   22 CONTINUE
      PRINT 44
      PRINT 66
      DO 24 I=1,M
      SIGNAL=ABS(A(I)/B(I,M+I))
      PRINT 68, I,SIGNAL
   24 CONTINUE
      IF (N1.EQ.3) GO TO 38
      PRINT 72
      PRINT 74, TIME,TIME,TIME,TIME
      DO 36 I=1,N
      NI=N+I
      N2=2*N+I
      N3=3*N+I
      PRINT 76, I,T(I),H(N3),H(I),H(NI),H(N2)
   36 CONTINUE
      GO TO 42
   38 PRINT 78
      PRINT 80, TIME,TIME,TIME
      DO 40 I=1,N
      NI=N+I
      N2=2*N+I
      PRINT 82, I,T(I),H(N2),H(I),H(NI)
   40 CONTINUE
   42 CALL PLOT (TIME)
      CALL FLOW (A,NAME,IDATE,TIME,MATX,IGLOM)
      RETURN
C
C
   44 FORMAT(1H1)
   46 FORMAT(1H1,44X,42H*****STATISTICAL ASPECTS OF THE MODEL*****//1X,*
     1THE ERROR IS*,3X,E11.4)
   48 FORMAT(/,1X,*THE GOODNESS OF FIT IS THE FOLLOWING TEST OF HYPOTHES
     1IS*//10X,*HYPOTHESIS              = THE MODEL FITS THE DATA*)
   50 FORMAT(/,10X,*ALTERNATE HYPOTHESIS = THE MODEL DOES NOT FIT THE DA
     1TA*)
   52 FORMAT(//,3X,*-THE HYPOTHESIS IS REJECTED IF THE ERROR IS GREATER
     1THAN *,F6.2,1H.)
   54 FORMAT(3X,*-THIS IS A .01 PROBABILITY THAT THE HYPOTHESIS IS REJEC
     1TED GIVEN THAT IT IS TRUE.*)
   56 FORMAT(3X,*-THEREFORE THIS DATA SAMPLE DOES NOT SATISFY THE HYPOTH
     1ESIS.*)
   58 FORMAT(3X,*-THEREFORE THIS DATA SAMPLE DOES SATISFY THE HYPOTHESIS
     1*)
   60 FORMAT(1X,17(F6.3,1X))
   62 FORMAT(///,1X,*THE COVARIANCE MATRIX*)
   64 FORMAT(1X,13(E9.2,1X))
   66 FORMAT(///1X,37HTHE ABSOLUTE RATIO OF SIGNAL/VARIANCE//5X,1HI,10X,
     114HA(I)/VAR(A(I)))
   68 FORMAT(4X,I2,12X,E9.2)
```

```
72 FORMAT(1H1,53X,25H*****THE FITTED DATA*****//6X,*I*,13X,*T(I)*,14X
  1,*BLOOD AND TISSUE*,9X,*RIGHT KIDNEY*,11X,*LEFT KIDNEY*,13X,*BLADD
  2ER*)
74 FORMAT(17X,*TIME(MINS)*,14X,*COUNTS/*,F2.0,* SEC*,9X,*COUNTS/*,F2.
  10,* SEC*,9X,*COUNTS/*,F2.0,* SEC*,9X,*COUNTS/*,F2.0,* SEC*/)
76 FORMAT(5X,I3,5X,F12.2,5X,4(10X,F12.4))
78 FORMAT(1H1,54X,25H*****THE FITTED DATA*****//17X,*I*,13X,*T(I)*,14
  1X,*BLOOD AND TISSUE*,11X,*KIDNEY*,13X,*BLADDER*)
80 FORMAT(28X,*TIME(MINS)*,14X,*COUNTS/*,F2.0,* SEC*,9X,*COUNTS/*,F2.
  10,* SEC*,9X,*COUNTS/*,F2.0,* SEC*/)
82 FORMAT(16X,I3,5X,F12.2,5X,3(10X,F12.4))
   END
```

```
      SUBROUTINE TABLE (A,XLINMAX,M)
C
C           THE SUBROUTINE TABLE GIVES A LISTING OF THE PARAMETERS FOR
C                THE KIDNEY MODEL AND THE MAXIMUM ALLOWED STEP SIZE.
C
C            A       - THE PARAMETERS FOR THE KIDNEY MODEL
C            XLINMAX - THE MAXIMUM ALLOWED STEP SIZE
C            M       - THE NUMBER OF MODEL PARAMETERS
C
      DIMENSION A(32),XLINMAX(32)
      PRINT 14
      NX=(60-M)/4
      DO 10 I=1,NX
      PRINT 16
   10 CONTINUE
      PRINT 18
      PRINT 20
      DO 12 I=1,M
      PRINT 22, I,A(I),XLINMAX(I)
   12 CONTINUE
      PRINT 18
      RETURN
C
C
   14 FORMAT(1H1)
   16 FORMAT(/)
   18 FORMAT(52X,34(1H*))
   20 FORMAT(52X,1H*,2X,*I*,6X,*A(I)*,12X,*XLINMAX*,1H*)
   22 FORMAT(52X,1H*,1X,I2,2X,F11.2,4X,F11.2,1X,1H*)
      END
```

```
      SUBROUTINE TEST (M,Z,XK,D1,LG)
C
C           THE SUBROUTINE TEST DETERMINES IF THE STEP SIZE IS LESS
C                THAN A CERTAIN SPECIFIED RANGE.  THE SOLUTION IS SAID
C                TO CONVERGE IF
C                  ABS(D1*Z(I))/(.001+ABS(XK(I))) < .0001
C                FOR ALL I.
C
C            M  - THE NUMBER OF MODEL PARAMETERS
C            Z  -THE STEP SIZE AT THE PRESENT ITERATION
C            XK - THE MODEL PARAMETERS AT THE PREVIOUS ITERATION
C            D1 - A FACTOR
C            LG - LOGICAL VARIABLE
C                  LG = 1 SOLUTION CONVERGES
C                  LG = 0 SOLUTION DOES NOT CONVERGE
C
      LOGICAL LG
      DIMENSION Z(32),XK(32)
      DO 10 I=1,M
      LG=ABS(D1*Z(I))/(.001+ABS(XK(I))).LT..0001
      IF (LG) 10,12
   10 CONTINUE
   12 RETURN
      END
```

```
      SUBROUTINE TF11 (A,K)
C
C        THE SUBROUTINE TF11 GENERATES A TIME FUNCTION VALUE FOR
C             EACH TIME FUNCTION FOR THE ONE KIDNEY MODEL.  THESE TIME
C             FUNCTION VALUES ARE STORED IN THE ARRAY H.
C
C        THE TIME FUNCTIONS WITH GLOMERULAR FILTRATION
C
C                  TF1 = Q3 + Q4 + A(10)*(Q1 + Q2)
C                  TF2 =      Q5 + A(11)*(Q1 + Q2)
C                  TF3 =           A(12)*(Q1 + Q2)
C
C        THE TIME FUNCTIONS WITHOUT GLOMERULAR FILTRATION
C
C                  TF1 = Q3 + Q4 + A(9)*(Q1 + Q2)
C                  TF2 =      Q5 + A(10)*(Q1 + Q2)
C                  TF3 =           A(11)*(Q1 + Q2)
C
C                       TF1 - KIDNEY
C                       TF2 - BLADDER
C                       TF3 - BLOOD AND TISSUE
C
C            A - PARAMETERS FOR THE KIDNEY MODEL
C            K - THE INDEX FOR THE TIME POINT
C
      COMMON/FNT/T(150),R(600),H(600)
      COMMON/QFN/Q1(150),Q2(150),Q3(150),Q4(150),Q5(150)
      COMMON/CONST/N,N1,M,M1
      DIMENSION A(32)
      K1=N+K
      K2=2*N+K
C        H(K) - TIME FUNCTION FOR THE KIDNEY
      H(K)=Q3(K)+Q4(K)+A(M1+1)*(Q1(K)+Q2(K))
C        H(K1) - TIME FUNCTION FOR BLADDER
      H(K1)=Q5(K)+A(M1+2)*(Q1(K)+Q2(K))
C        H(K2) - TIME FUNCTION FOR BLOOD AND TISSUE
      H(K2)=A(M1+3)*(Q1(K)+Q2(K))
      RETURN
      END
```

```
      SUBROUTINE TF21 (A,K)
C
C        THE SUBROUTINE TF21 GENERATES A TIME FUNCTION VALUE FOR
C             EACH TIME FUNCTION FOR THE TWO KIDNEY MODEL.  THESE TIME
C             FUNCTION VALUES ARE STORED IN THE ARRAY H.
C
C        THE TIME FUNCTIONS WITH GLOMERULAR FILTRATION
C
C                TF1 = A(15)*(Q3+Q4)+A(16)*Q1+A(17)*Q2+A(18)*Q5
C                TF2 = A(19)*(Q6+Q7)+A(20)*Q1+A(21)*Q2+A(22)*Q5
C                TF3 = A(24)*Q1+A(25)*Q2+A(23)*Q5
C                   TF4 = A(26)*Q1+A(27)*Q2+A(28)*Q5+A(29)*(Q3+Q4)
C                              +A(30)*(Q6+Q7)
C
C        THE TIME FUNCTIONS WITHOUT GLOMERULAR FILTRATION
C
C                TF1 = A(13)*(Q3+Q4)+A(14)*Q1+A(15)*Q2+A(16)*Q5
C                TF2 = A(17)*(Q6+Q7)+A(18)*Q1+A(19)*Q2+A(20)*Q5
C                TF3 = A(22)*Q1+A(23)*Q2+A(21)*Q5
C                TF4 = A(24)*Q1+A(25)*Q2+A(26)*Q5+A(27)*(Q3+Q4)
C                              +A(28)*(Q6+Q7)
C
C                     TF1 - RIGHT KIDNEY
C                     TF2 - LEFT KIDNEY
C                     TF3 - BLADDER
C                     TF4 - BLOOD AND TISSUE
C
C           A - PARAMETERS FOR THE KIDNEY MODEL
C           K - THE INDEX FOR THE TIME POINT
C
      COMMON/FNT/T(150),R(600),H(600)
      COMMON/QFN/Q1(150),Q2(150),Q3(150),Q4(150),Q5(150),Q6(150),Q7(150)
      COMMON/CONST/N,N1,M,M1
      DIMENSION A(32)
      K1=N+K
      K2=2*N+K
      K3=3*N+K
C        H(K) - TIME FUNCTION FOR RIGHT KIDNEY
      H(K)=A(M1+1)*(Q3(K)+Q4(K))+A(M1+2)*Q1(K)+A(M1+3)*Q2(K)+A(M1+4)*Q5(
     1K)
C        H(K1) - TIMEFUNCTION FOR LEFT KIDNEY
      H(K1)=A(M1+5)*(Q6(K)+Q7(K))+A(M1+6)*Q1(K)+A(M1+7)*Q2(K)+A(M1+8)*Q5
     1(K)
C        H(K2) - TIME FUNCTION FOR BLADDER
      H(K2)=A(M1+9)*Q5(K)+A(M1+10)*Q1(K)+A(M1+11)*Q2(K)
C        H(K3) - TIME FUNCTION FOR BLOOD AND TISSUE
      H(K3)=A(M1+12)*Q1(K)+A(M1+13)*Q2(K)+A(M1+14)*Q5(K)+A(M1+15)*(Q3(K)
     1+Q4(K))+A(M1+16)*(Q6(K)+Q7(K))
      RETURN
      END
```

```
      SUBROUTINE TF22 (A,K)
C
C        THE SUBROUTINE TF22 GENERATES A TIME FUNCTION VALUE FOR
C             EACH TIME FUNCTION FOR THE ONE KIDNEY MODEL.  THESE TIME
C             FUNCTION VALUES ARE STORED IN THE ARRAY H.
C
C        THE TIME FUNCTIONS WITH GLOMERULAR FILTRATION
C
C                  TF1 = Q3+Q4+A(15)*(Q1+Q2)+A(16)*Q5
C                  TF2 = Q6+Q7+A(17)*(Q1+Q2)+A(18)*Q5
C                  TF3 = A(19)*Q5+A(20)*(Q1+Q2)
C                  TF4 = A(21)*(Q1+Q2)+A(22)*Q5+A(23)*(Q3+Q4)
C                              +A(24)*(Q6+Q7)
C
C        THE TIME FUNCTIONS WITHOUT GLOMERULAR FILTRATION
C
C                  TF1 = Q3+Q4+A(13)*(Q1+Q2)+A(14)*Q5
C                  TF2 = Q6+Q7+A(15)*(Q1+Q2)+A(16)*Q5
C                  TF3 = A(17)*Q5+A(18)*(Q1+Q2)
C                  TF4 = A(19)*(Q1+Q2)+A(20)*Q5+A(21)*(Q3+Q4)
C                              +A(22)*(Q6+Q7)
C
C                       TF1 - RIGHT KIDNEY
C                       TF2 - LEFT KIDNEY
C                       TF3 - BLADDER
C                       TF4 - BLOOD AND TISSUE
C
C            A - PARAMETERS FOR THE KIDNEY MODEL
C            K - THE INDEX FOR THE TIME POINT
C
      COMMON/FNT/T(150),R(600),H(600)
      COMMON/QFN/Q1(150),Q2(150),Q3(150),Q4(150),Q5(150),Q6(150),Q7(150)
      COMMON/CONST/N,N1,M,M1
      DIMENSION A(32)
      K1=N+K
      K2=2*N+K
      K3=3*N+K
C        H(K) - TIMEFUNCTION FOR RIGHT KIDNEY
      H(K)=Q3(K)+Q4(K)+A(M1+1)*(Q1(K)+Q2(K))+A(M1+2)*Q5(K)
C        H(K1) - TIMEFUNCTION FOR LEFT KIDNEY
      H(K1)=Q6(K)+Q7(K)+A(M1+3)*(Q1(K)+Q2(K))+A(M1+4)*Q5(K)
C        H(K2) - TIMEFUNCTION FOR BLADDER
      H(K2)=A(M1+5)*Q5(K)+A(M1+6)*(Q1(K)+Q2(K))
C        H(K3) - TIMEFUNCTION FOR BLOOD AND TISSUE
      H(K3)=A(M1+7)*(Q1(K)+Q2(K))+A(M1+8)*Q5(K)+A(M1+9)*(Q3(K)+Q4(K))+A(
     1M1+10)*(Q6(K)+Q7(K))
      RETURN
      END
```

```
      SUBROUTINE TF23 (A,K)
C
C        THE SUBROUTINE TF23 GENERATES A TIME FUNCTION VALUE FOR
C             EACH TIME FUNCTION FOR THE ONE KIDNEY MODEL.  THESE TIME
C             FUNCTION VALUES ARE STORED IN THE ARRAY H.
C
C        THE TIME FUNCTIONS WITH GLOMERULAR FILTRATION
C
C                  TF1 = A(15)*Q3+A(16)*Q4+A(17)*(Q1+Q2)+A(18)*Q5
C                  TF2 = A(19)*Q6+A(20)*Q7+A(21)*(Q1+Q2)+A(22)*Q5
C                  TF3 = A(23)*Q5+A(24)*(Q1+Q2)
C                  TF4 = A(25)*(Q1+Q2)+A(26)*Q5+A(27)*Q3+A(28)*Q4
C                              +A(29)*Q6+A(30)*Q7
C
C        THE TIME FUNCTIONS WITHOUT GLOMERULAR FILTRATION
C
C                  TF1 = A(13)*Q3+A(14)*Q4+A(15)*(Q1+Q2)+A(16)*Q5
C                  TF2 = A(17)*Q6+A(18)*Q7+A(19)*(Q1+Q2)+A(20)*Q5
C                  TF3 = A(21)*Q5+A(22)*(Q1+Q2)
C                  TF4 = A(23)*(Q1+Q2)+A(24)*Q5+A(25)*Q3+A(26)*Q4
C                              +A(27)*Q6+A(28)*Q7
C
C                       TF1 - RIGHT KIDNEY
C                       TF2 - LEFT KIDNEY
C                       TF3 - BLADDER
C                       TF4 - BLOOD AND TISSUE
C
C            A - PARAMETERS FOR THE KIDNEY MODEL
C            K - THE INDEX FOR THE TIME POINT
C
      COMMON/FNT/T(150),R(600),H(600)
      COMMON/QFN/Q1(150),Q2(150),Q3(150),Q4(150),Q5(150),Q6(150),Q7(150)
      COMMON/CONST/N,N1,M,M1
      DIMENSION A(32)
      K1=N+K
      K2=2*N+K
      K3=3*N+K
C        H(K) - TIMEFUNCTION FOR RIGHT KIDNEY
      H(K)=A(M1+1)*Q3(K)+A(M1+2)*Q4(K)+A(M1+3)*(Q1(K)+Q2(K))+A(M1+4)*Q5(
     1K)
C        H(K1) - TIMEFUNCTION FOR LEFT KIDNEY
      H(K1)=A(M1+5)*Q6(K)+A(M1+6)*Q7(K)+A(M1+7)*(Q1(K)+Q2(K))+A(M1+8)*Q5
     1(K)
C        H(K2) - TIMEFUNCTION FOR BLADDER
      H(K2)=A(M1+9)*Q5(K)+A(M1+10)*(Q1(K)+Q2(K))
C        H(K3) - TIMEFUNCTION FOR BLOOD AND TISSUE
      H(K3)=A(M1+11)*(Q1(K)+Q2(K))+A(M1+12)*Q5(K)+A(M1+13)*Q3(K)+A(M1+14
     1)*Q4(K)+A(M1+15)*Q6(K)+A(M1+16)*Q7(K)
      RETURN
      END
```

```
      SUBROUTINE TF24 (A,K)
C
C        THE SUBROUTINE TF24 GENERATES A TIME FUNCTION VALUE FOR
C             EACH TIME FUNCTION FOR THE ONE KIDNEY MODEL.  THESE TIME
C             FUNCTION VALUES ARE STORED IN THE ARRAY H.
C
C        THE TIME FUNCTIONS WITH GLOMERULAR FILTRATION
C
C                  TF1 = A(15)*Q3+A(16)*Q4+A(17)*Q1+A(18)*Q2
C                              +A(19)*Q5
C                  TF2 = A(15)*Q6+A(16)*Q7+A(20)*Q1+A(21)*Q2
C                              +A(22)*Q5
C                  TF3 = A(24)*Q1+A(25)*Q2+A(23)*Q5
C                  TF4 = A(26)*Q1+A(27)*Q2+A(28)*Q5+A(29)*(Q3+Q4)
C                              +A(30)*(Q6+Q7)
C
C        THE TIME FUNCTIONS WITHOUT GLOMERULAR FILTRATION
C
C                  TF1 = A(13)*Q3+A(14)*Q4+A(15)*Q1+A(16)*Q2
C                              +A(17)*Q5
C                  TF2 = A(13)*Q6+A(14)*Q7 A(18)*Q1+A(19)*Q2
C                              +A(20)*Q5
C                  TF3 = A(22)*Q1+A(23)*Q2+A(21)*Q5
C                  TF4 = A(24)*Q1+A(25)*Q2+A(26)*Q5+A(29)*(Q3+Q4)
C                              +A(28)*(Q6+Q7)
C
C                      TF1 - RIGHT KIDNEY
C                      TF2 - LEFT KIDNEY
C                      TF3 - BLADDER
C                      TF4 - BLOOD AND TISSUE
C
C            A - THE PARAMETERS FOR THE KIDNEY MODEL
C            K - THE INDEX FOR THE TIME POINT
C
      COMMON/FNT/T(150),R(600),H(600)
      COMMON/QFN/Q1(150),Q2(150),Q3(150),Q4(150),Q5(150),Q6(150),Q7(150)
      COMMON/CONST/N,N1,M,M1
      DIMENSION A(32)
      K1=N+K
      K2=2*N+K
      K3=3*N+K
C        H(K) - TIMEFUNCTION FOR RIGHT KIDNEY
      H(K)=A(M1+1)*Q3(K)+A(M1+2)*Q4(K)+A(M1+3)*Q1(K)+A(M1+4)*Q2(K)+A(M1+
     15)*Q5(K)
C        H(K1) - TIMEFUNCTION FOR LEFT KIDNEY
      H(K1)=A(M1+1)*Q6(K)+A(M1+2)*Q7(K)+A(M1+6)*Q1(K)+A(M1+7)*Q2(K)+A(M1
     1+8)*Q5(K)
C        H(K2) - TIMEFUNCTION FOR BLADDER
      H(K2)=A(M1+9)*Q5(K)+A(M1+10)*Q1(K)+A(M1+11)*Q2(K)
C        H(K3) - TIMEFUNCTION FOR BLOOD AND TISSUE
      H(K3)=A(M1+12)*Q1(K)+A(M1+13)*Q2(K)+A(M1+14)*Q5(K)+A(M1+15)*(Q3(K)
     1+Q4(K))+A(M1+16)*(Q6(K)+Q7(K))
      RETURN
      END
```

```
      SUBROUTINE TF25 (A,K)
C
C        THE SUBROUTINE TF25 GENERATES A TIME FUNCTION VALUE FOR
C             EACH TIME FUNCTION FOR THE ONE KIDNEY MODEL.  THESE TIME
C             FUNCTION VALUES ARE STORED IN THE ARRAY H.
C
C        THE TIME FUNCTIONS WITH GLOMERULAR FILTRATION
C
C                  TF1 = Q3+Q4+A(15)*(Q1+Q2)
C                  TF2 = Q6+Q7+A(16)*(Q1+Q2)
C                  TF3 = Q5+A(17)*(Q1+Q2)
C                  TF4 = A(18)*(Q1+Q2)+A(19)*(Q3+Q4)+A(20)*(Q6+Q7)
C                            +A(21)*Q5
C
C        THE TIME FUNCTIONS WITHOUT GLOMERULAR FILTRATION
C
C                  TF1 = Q3+Q4+A(13)*(Q1+Q2)
C                  TF2 = Q6+Q7+A(14)*(Q1+Q2)
C                  TF3 = Q5+A(15)*(Q1+Q2)
C                  TF4 = A(16)*(Q1+Q2)+A(17)*(Q3+Q4)+A(18)*(Q6+Q7)
C                            +A(19)*Q5
C
C                       TF1 - RIGHT KIDNEY
C                       TF2 - LEFT KIDNEY
C                       TF3 - BLADDER
C                       TF4 - BLOOD AND TISSUE
C
C            A - PARAMETERS FOR THE KIDNEY MODEL
C            K - THE INDEX FOR THE TIME POINT
C
      COMMON/FNT/T(150),R(600),H(600)
      COMMON/QFN/Q1(150),Q2(150),Q3(150),Q4(150),Q5(150),Q6(150),Q7(150)
      COMMON/CONST/N,N1,M,M1
      DIMENSION A(32)
      K1=N+K
      K2=2*N+K
      K3=3*N+K
C        H(K) - TIMEFUNCTION FOR RIGHT KIDNEY
      H(K)=Q3(K)+Q4(K)+A(M1+1)*(Q1(K)+Q2(K))
C        H(K1) - TIMEFUNCTION FOR LEFT KIDNEY
      H(K1)=Q6(K)+Q7(K)+A(M1+2)*(Q1(K)+Q2(K))
C        H(K2) - TIMEFUNCTION FOR BLADDER
      H(K2)=Q5(K)+A(M1+3)*(Q1(K)+Q2(K))
C        H(K3) - TIMEFUNCTION FOR BLOOD AND TISSUE
      H(K3)=A(M1+4)*(Q1(K)+Q2(K))+A(M1+5)*(Q3(K)+Q4(K))+A(M1+6)*(Q6(K)+Q
     17(K))+A(M1+7)*Q5(K)
      RETURN
      END
```

```
      SUBROUTINE TF26 (A,K)
C
C        THE SUBROUTINE TF26 GENERATES A TIME FUNCTION VALUE FOR
C             EACH TIME FUNCTION FOR THE ONE KIDNEY MODEL.  THESE TIME
C             FUNCTION VALUES ARE STORED IN THE ARRAY H.
C
C        THE TIME FUNCTIONS WITH GLOMERULAR FILTRATION
C
C                   TF1 = Q3+A(15)*Q4+A(16)*(Q1+Q2)+A(17)*Q5
C                   TF2 = Q6+A(18)*Q7+A(19)*(Q1+Q2)+A(20)*Q5
C                   TF3 = A(22)*Q5+A(21)*(Q1+Q2)
C                   TF4 = A(23)*(Q1+Q2)+A(24)*Q4+A(25)*Q7+A(26)*Q5
C
C        THE TIME FUNCTIONS WITHOUT GLOMERULAR FILTRATION
C
C                  TF1 = Q3+A(13)*Q4+A(14)*(Q1+Q2)+A(15)*Q5
C                  TF2 = Q6+A(16)*Q7+A(17)*(Q1+Q2)+A(18)*Q5
C                  TF3 = A(20)*Q5+A(19)*(Q1+Q2)
C                  TF4 = A(21)*(Q1+Q2)+A(22)*Q4+A(23)*Q7+A(24)*Q5
C
C                        TF1 - RIGHT KIDNEY
C                        TF2 - LEFT KIDNEY
C                        TF3 - BLADDER
C                        TF4 - BLOOD AND TISSUE
C
C            A - PARAMETERS FOR THE KIDNEY MODEL
C            K - THE INDEX FOR THE TIME POINT
C
      COMMON/FNT/T(150),R(600),H(600)
      COMMON/QFN/Q1(150),Q2(150),Q3(150),Q4(150),Q5(150),Q6(150),Q7(150)
      COMMON/CONST/N,N1,M,M1
      DIMENSION A(32)
      K1=N+K
      K2=2*N+K
      K3=3*N+K
C        H(K) - TIMEFUNCTION FOR RIGHT KIDNEY
      H(K)=Q3(K)+A(M1+1)*Q4(K)+A(M1+2)*(Q1(K)+Q2(K))+A(M1+3)*Q5(K)
C        H(K1) - TIMEFUNCTION FOR LEFT KIDNEY
      H(K1)=Q6(K)+A(M1+4)*Q7(K)+A(M1+5)*(Q1(K)+Q2(K))+A(M1+6)*Q5(K)
C        H(K2) - TIMEFUNCTION FOR BLADDER
      H(K2)=A(M1+7)*Q5(K)+A(M1+8)*(Q1(K)+Q2(K))
C        H(K3) - TIMEFUNCTION FOR BLOOD AND TISSUE
      H(K3)=A(M1+9)*(Q1(K)+Q2(K))+A(M1+10)*Q4(K)+A(M1+11)*Q7(K)+A(M1+12)
     1*Q5(K)
      RETURN
      END
```

```
      SUBROUTINE TF27 (A,K)
C
C        THE SUBROUTINE TF27 GENERATES A TIME FUNCTION VALUE FOR
C             EACH TIME FUNCTION FOR THE ONE KIDNEY MODEL.  THESE TIME
C             FUNCTION VALUES ARE STORED IN THE ARRAY H.
C
C        THE TIME FUNCTIONS WITH GLOMERULAR FILTRATION
C
C                  TF1 = Q3 + Q4 + A(15)*(Q1 + Q2)
C                  TF2 = Q6 + Q7 + A(16)*(Q1 + Q2)
C                  TF3 =      Q5 + A(17)*(Q1 + Q2)
C                  TF4 = A(18)*(Q1 + Q2)
C
C        THE TIME FUNCTIONS WITHOUT GLOMERULAR FILTRATION
C
C                  TF1 = Q3 + Q4 + A(13)*(Q1 + Q2)
C                  TF2 = Q6 + Q7 + A(14)*(Q1 + Q2)
C                  TF3 =      Q5 + A(15)*(Q1 + Q2)
C                  TF4 = A(16)*(Q1 + Q2)
C
C                       TF1 - RIGHT KIDNEY
C                       TF2 - LEFT KIDNEY
C                       TF3 - BLADDER
C                       TF4 - BLOOD AND TISSUE
C
C             A - PARAMETERS FOR THE KIDNEY MODEL
C             K - THE INDEX FOR THE TIME POINT
C
      COMMON/FNT/T(150),R(600),H(600)
      COMMON/QFN/Q1(150),Q2(150),Q3(150),Q4(150),Q5(150),Q6(150),Q7(150)
      COMMON/CONST/N,N1,M,M1
      DIMENSION A(32)
      K1=N+K
      K2=2*N+K
      K3=3*N+K
C        H(K) - TIMEFUNCTION FOR RIGHT KIDNEY
      H(K)=Q3(K)+Q4(K)+A(M1+1)*(Q1(K)+Q2(K))
C        H(K1) - TIMEFUNCTION FOR LEFT KIDNEY
      H(K1)=Q6(K)+Q7(K)+A(M1+2)*(Q1(K)+Q2(K))
C        H(K2) - TIMEFUNCTION FOR BLADDER
      H(K2)=Q5(K)+A(M1+3)*(Q1(K)+Q2(K))
C        H(K3) - TIMEFUNCTION FOR BLOOD AND TISSUE
      H(K3)=A(M1+4)*(Q1(K)+Q2(K))
      RETURN
      END
```

```
      SUBROUTINE TF28 (A,K)
C
C        THE SUBROUTINE TF28 GENERATES A TIME FUNCTION VALUE FOR
C             EACH TIME FUNCTION FOR THE ONE KIDNEY MODEL.  THESE TIME
C             FUNCTION VALUES ARE STORED IN THE ARRAY H.
C
C        THE TIME FUNCTIONS WITH GLOMERULAR FILTRATION
C
C                  TF1 = Q3+Q4+D1*(Q6+Q7)+(A(15)+D1*A(17))*(Q1+Q2)
C                            +(A(16)+D1*A(18))*Q5
C                  TF2 = Q6+Q7+D2*(Q3+Q4)+(A(17)+D2*A(15))*(Q1+Q2)
C                            +(A(18)+D2*A(16))*Q5
C                  TF3 = A(19)*Q5+A(20)*(Q3+Q4)+A(21)*(Q6+Q7)
C                            +A(22)*(Q1+Q2)
C                  TF4 = A(23)*(Q1+Q2)+A(24)*(Q3+Q4)+A(25)*(Q6+Q7)
C                            +A(26)*Q5
C
C        THE TIME FUNCTIONS WITHOUT GLOMERULAR FILTRATION
C
C                  TF1 = Q3+Q4+D1*(Q6+Q7)+(A(13)+D1*A(15))*(Q1+Q2)
C                            +(A(14)+D1*A(16))*Q5
C                  TF2 = Q6+Q7+D2*(Q3+Q4)+(A(15)+D2*A(13))*(Q1+Q2)
C                            +(A(16)+D2*A(14))*Q5
C                  TF3 = A(17)*Q5+A(18)*(Q3+Q4)+A(19)*(Q6+Q7)
C                            +A(20)*(Q1+Q2)
C                  TF4 = A(21)*(Q1+Q2)+A(22)*(Q3+Q4)+A(23)*(Q6+Q7)
C                            +A(24)*Q5
C
C                       TF1 - RIGHT KIDNEY
C                       TF2 - LEFT KIDNEY
C                       TF3 - BLADDER
C                       TF4 - BLOOD AND TISSUE
C
C                 THIS IS THE ADAC MODEL(J. A. DEGRAZIA, P. O. SCHEIBE,
C                 ET AL., CLINICAL APPLICATIONS OF KINETIC MODEL OF
C                 HIPPURATE DISTRIBUTION AND RENAL CLEARANCE, J. NUCL.
C                 MED., 15(1974), PP 102-114).
C
C            A - PARAMETERS FOR THE KIDNEY MODEL
C            K - THE INDEX FOR THE TIME POINT
C
      COMMON/FNT/T(150),R(600),H(600)
      COMMON/QFN/Q1(150),Q2(150),Q3(150),Q4(150),Q5(150),Q6(150),Q7(150)
      COMMON/CONST/N,N1,M,M1
      DIMENSION A(32)
      DATA D1,D2/.05,.08/
      K1=N+K
      K2=2*N+K
      K3=3*N+K
C        H(K) - TIMEFUNCTION FOR RIGHT KIDNEY
      H(K)=Q3(K)+Q4(K)+D1*(Q6(K)+Q7(K))+(A(M1+1)+D1*A(M1+3))*(Q1(K)+Q2(K
     1))+(A(M1+2)+D1*A(M1+4))*Q5(K)
C        H(K1) - TIMEFUNCTION FOR LEFT KIDNEY
      H(K1)=Q6(K)+Q7(K)+D2*(Q3(K)+Q4(K))+(A(M1+3)+D2*A(M1+1))*(Q1(K)+Q2(
     1K))+(A(M1+4)+D2*A(M1+2))*Q5(K)
C        H(K2) - TIMEFUNCTION FOR BLADDER
      H(K2)=A(M1+5)*Q5(K)+A(M1+6)*(Q3(K)+Q4(K))+A(M1+7)*(Q6(K)+Q7(K))+A(
     1M1+8)*(Q1(K)+Q2(K))
C        H(K3) - TIMEFUNCTION FOR BLOOD AND TISSUE
      H(K3)=A(M1+9)*(Q1(K)+Q2(K))+A(M1+10)*(Q3(K)+Q4(K))+A(M1+11)*(Q6(K)
     1+Q7(K))+A(M1+12)*Q5(K)
      RETURN
```

END

Appendix B - OUTPUT FOR THE KIDNEY COMPUTER PROGRAM

The following pages give an example of the output of the kidney program for the two kidney model. If IRPT = 1, the subroutine MARQ gives a listing of the parameters at each iteration, the gradient evaluated for these parameters, and the correction vector. The subroutines FLOW1 and FLOW2 print a flow diagram of the kidney model giving the estimated parameters for the constant rate coefficients, the delay times τ_1 and τ_2, the initial solutions in the blood pool, extravascular pool, and tubular cells of the kidneys along with the estimate of the matrix γ. The subroutines PRAM1 and PRAM2 give a listing of the parameters along with an expression for the functional relationship between the time functions TF1, TF2, TF3, TF4 and the compartment equations Q1, Q2, Q3, Q4, Q5, Q6, Q7. The subroutine PLOT gives a comparative plot of the original data and the fitted data generated by the optimum solution for the parameters. A comparative plot is given for each of the time functions--blood and tissue, kidney, and bladder.

The subroutine SOLUT calls the subroutines PRAM1 or PRAM2, PLOT, FLOW1 or FLOW2 described above and also prints out the covariance matrix for the estimated parameters, the ratio of the signal to variance, and the results of a goodness-of-fit test. It may happen with some data samples that the covariance matrix may not exist since the matrix B equation (29) is singular or nearly so since often the positive definiteness of the covariance matrix breaks down due to rounding error. This is the result of high correlations between the parameters in the model. The user may want to reduce the number of parameters M by allowing elements of the matrix γ to remain fixed and setting M=12 or 14 in the SUBROUTINE SOLUT. The matrix B may then be

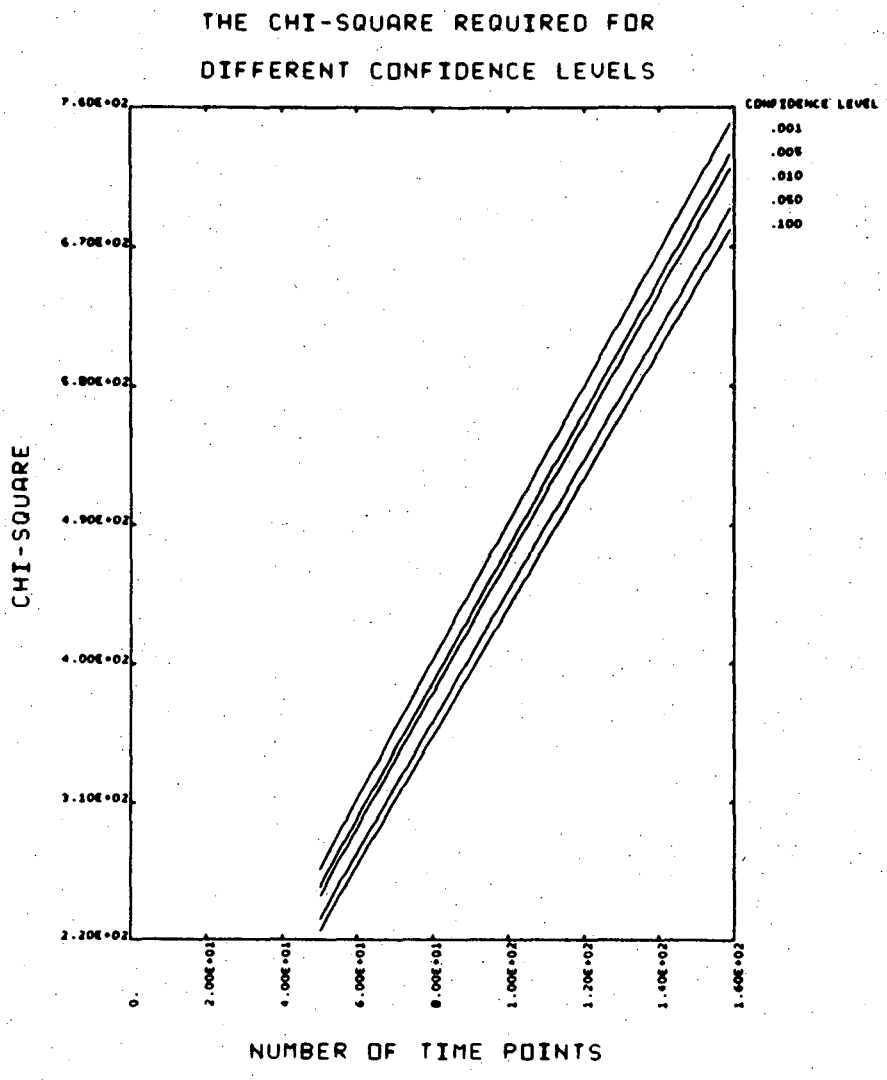
THE CHI-SQUARE REQUIRED FOR
DIFFERENT CONFIDENCE LEVELS
CONFIDENCE LEVEL
.001
.005
.010
.050
.100
7.60E+02
6.70E+02
5.80E+02
4.90E+02
4.00E+02
3.10E+02
2.20E+02
CHI-SQUARE
0.
2.00E+01
4.00E+01
6.00E+01
8.00E+01
1.00E+02
1.20E+02
1.40E+02
1.60E+02
NUMBER OF TIME POINTS

Figure 15.

better conditioned allowing one to evaluate the variances for some of the model parameters.

The sum of squares given by equation (33)

$$R(\beta) = \sum_{j=1}^{N} \sum_{i=1}^{4} \frac{(W_j^i - w_j^i(\beta))}{W_j^i} \qquad (33)$$

has the chi-square distribution χ^2 with $4 \cdot N = n$ degrees of freedom [7]. Therefore the subroutine SOLUT gives the following test of hypotheses

H_0: The model fits the data

H_1: The model does not fit the data

where H_0 is rejected if $R(\beta) > \chi^2_{\alpha'}$. The level of significance α' is the probability that the hypothesis is rejected given that it is true. For the number of degrees of freedom, n, greater than 30 the chi-square distribution is approximately normally distributed [21], so that the expression $(2\chi^2)^{\frac{1}{2}} - (2n-1)^{\frac{1}{2}}$ is approximately normally distributed with mean 0 and standard deviation 1. Therefore $\chi^2_{\alpha'}$, the α'-point of the χ^2 distribution, is computed by the formula

$$\chi^2_{\alpha'} = \tfrac{1}{2}[x_{\alpha'} + \sqrt{2n-1}\,]^2$$

where $x_{\alpha'}$ is the α'-point of the cumulative normal distribution. For $\alpha' = .0102$, the hypothesis H_o is rejected if

$$R(\alpha) > \tfrac{1}{2}[x_{\alpha'} + \sqrt{2Nm-1}\,]^2$$

where $x_{\alpha'} = 2.32$, N is the number of time points, and m is the number of time functions. For m=4, Figure 15 gives the plots of chi-square versus number of sampled points for various levels of confidence α'.

```
*************KIDNEY COMPARTMENT MODEL*************
*                                                *
* COSMIC DOG 1                                   *
*                                                *
* SEPT 6, 1973                                   *
*                                                *
* THE NO. OF TIMEFUNCTIONS IS 4                  *
*                                                *
* THE SAMPLE SIZE IS 100                         *
*                                                *
* THE NO. OF PARAMETERS IS 18                    *
*                                                *
* THE NO. OF PARAMETERS NOT INCLUDING            *
*      THE CROSS TALK MATRIX IS 14               *
*                                                *
* THE ISOTOPE SOURCE IS 586 MICROCURIES OF       *
*     I131-HIPPURAN                              *
*                                                *
* THE COLLIMATOR IS A HIGH ENERGY COLLIMATOR     *
**************************************************
```

DATA

I	T(I) TIME(MINS)	BLOOD AND TISSUE COUNTS/15 SEC	RIGHT KIDNEY COUNTS/15 SEC	LEFT KIDNEY COUNTS/15 SEC	BLADDER COUNTS/15 SEC
1	.25	8498.0000	609.0000	319.0000	330.0000
2	.50	8354.0000	1293.0000	817.0000	649.0000
3	.75	8228.0000	1595.0000	993.0000	619.0000
4	1.00	8083.0000	1814.0000	1051.0000	601.0000
5	1.25	8031.0000	1853.0000	1143.0000	556.0000
6	1.50	7701.0000	1919.0000	1214.0000	578.0000
7	1.75	7831.0000	2045.0000	1265.0000	543.0000
8	2.00	7947.0000	2102.0000	1364.0000	559.0000
9	2.25	7701.0000	2061.0000	1410.0000	588.0000
10	2.50	7910.0000	2177.0000	1326.0000	598.0000
11	2.75	7755.0000	2260.0000	1535.0000	575.0000
12	3.00	7712.0000	2227.0000	1529.0000	620.0000
13	3.25	7811.0000	2383.0000	1524.0000	521.0000
14	3.50	7705.0000	2404.0000	1642.0000	569.0000
15	3.75	7656.0000	2421.0000	1609.0000	541.0000
16	4.00	7755.0000	2394.0000	1645.0000	563.0000
17	4.25	7633.0000	2451.0000	1654.0000	587.0000
18	4.50	7524.0000	2524.0000	1756.0000	542.0000
19	4.75	7597.0000	2558.0000	1802.0000	570.0000
20	5.00	7576.0000	2535.0000	1891.0000	534.0000
21	5.25	7416.0000	2600.0000	1771.0000	592.0000
22	5.50	7497.0000	2527.0000	1802.0000	657.0000
23	5.75	7486.0000	2576.0000	1822.0000	670.0000
24	6.00	7269.0000	2520.0000	1691.0000	773.0000
25	6.25	7140.0000	2466.0000	1661.0000	879.0000
26	6.50	7141.0000	2443.0000	1673.0000	928.0000
27	6.75	7142.0000	2314.0000	1635.0000	1089.0000
28	7.00	7144.0000	2349.0000	1511.0000	1184.0000
29	7.25	6960.0000	2267.0000	1482.0000	1265.0000
30	7.50	6995.0000	2188.0000	1390.0000	1338.0000
31	7.75	6977.0000	2171.0000	1387.0000	1376.0000
32	8.00	6923.0000	2090.0000	1274.0000	1607.0000
33	8.25	6945.0000	1919.0000	1249.0000	1710.0000
34	8.50	6768.0000	1900.0000	1216.0000	1789.0000
35	8.75	6696.0000	1765.0000	1190.0000	1874.0000
36	9.00	6675.0000	1737.0000	1156.0000	1894.0000
37	9.25	6642.0000	1696.0000	1152.0000	2015.0000
38	9.50	6623.0000	1663.0000	1108.0000	2130.0000
39	9.75	6644.0000	1647.0000	1054.0000	2172.0000
40	10.00	6525.0000	1533.0000	1048.0000	2247.0000
41	10.25	6453.0000	1515.0000	1016.0000	2281.0000
42	10.50	6494.0000	1506.0000	928.0000	2352.0000
43	10.75	6360.0000	1426.0000	891.0000	2468.0000
44	11.00	6375.0000	1398.0000	929.0000	2537.0000
45	11.25	6282.0000	1384.0000	941.0000	2533.0000
46	11.50	6335.0000	1414.0000	821.0000	2510.0000
47	11.75	6429.0000	1326.0000	846.0000	2565.0000
48	12.00	6182.0000	1297.0000	860.0000	2641.0000
49	12.25	6263.0000	1273.0000	831.0000	2708.0000
50	12.50	6058.0000	1215.0000	840.0000	2764.0000
51	12.75	6081.0000	1227.0000	787.0000	2814.0000
52	13.00	6140.0000	1222.0000	827.0000	2818.0000
53	13.25	6125.0000	1193.0000	775.0000	2740.0000
54	13.50	6144.0000	1195.0000	826.0000	2885.0000
55	13.75	6060.0000	1192.0000	766.0000	2945.0000
56	14.00	6120.0000	1174.0000	736.0000	3017.0000
57	14.25	6040.0000	1188.0000	732.0000	2935.0000

58	14.50	6053.0000	1157.0000	768.0000	2975.0000
59	14.75	6121.0000	1138.0000	676.0000	3020.0000
60	15.00	6070.0000	1097.0000	740.0000	3059.0000
61	15.25	5967.0000	1134.0000	738.0000	3107.0000
62	15.50	5897.0000	1159.0000	753.0000	3162.0000
63	15.75	6126.0000	1071.0000	709.0000	3177.0000
64	16.00	5926.0000	1146.0000	708.0000	3307.0000
65	16.25	5987.0000	1060.0000	677.0000	3320.0000
66	16.50	5728.0000	1047.0000	705.0000	3338.0000
67	16.75	5810.0000	976.0000	703.0000	3171.0000
68	17.00	5896.0000	993.0000	669.0000	3280.0000
69	17.25	5932.0000	968.0000	690.0000	3250.0000
70	17.50	5772.0000	1034.0000	681.0000	3188.0000
71	17.75	5674.0000	1007.0000	643.0000	3273.0000
72	18.00	5683.0000	979.0000	653.0000	3274.0000
73	18.25	5755.0000	914.0000	686.0000	3408.0000
74	18.50	5881.0000	992.0000	661.0000	3408.0000
75	18.75	5707.0000	991.0000	647.0000	3316.0000
76	19.00	5795.0000	972.0000	615.0000	3375.0000
77	19.25	5710.0000	1024.0000	615.0000	3627.0000
78	19.50	5682.0000	951.0000	678.0000	3403.0000
79	19.75	5636.0000	956.0000	639.0000	3466.0000
80	20.00	5642.0000	991.0000	607.0000	3557.0000
81	20.25	5585.0000	1015.0000	646.0000	3402.0000
82	20.50	5553.0000	935.0000	619.0000	3423.0000
83	20.75	5627.0000	938.0000	647.0000	3474.0000
84	21.00	5573.0000	975.0000	603.0000	3477.0000
85	21.25	5606.0000	938.0000	610.0000	3439.0000
86	21.50	5663.0000	886.0000	603.0000	3509.0000
87	21.75	5570.0000	956.0000	587.0000	3575.0000
88	22.00	5463.0000	874.0000	602.0000	3497.0000
89	22.25	5614.0000	957.0000	603.0000	3615.0000
90	22.50	5452.0000	907.0000	564.0000	3552.0000
91	22.75	5727.0000	892.0000	605.0000	3468.0000
92	23.00	5480.0000	915.0000	593.0000	3538.0000
93	23.25	5455.0000	902.0000	558.0000	3738.0000
94	23.50	5543.0000	845.0000	545.0000	3674.0000
95	23.75	5599.0000	880.0000	575.0000	3646.0000
96	24.00	5444.0000	906.0000	569.0000	3707.0000
97	24.25	5463.0000	831.0000	561.0000	3778.0000
98	24.50	5437.0000	865.0000	588.0000	3613.0000
99	24.75	5479.0000	808.0000	552.0000	3602.0000
100	25.00	5416.0000	864.0000	523.0000	3710.0000

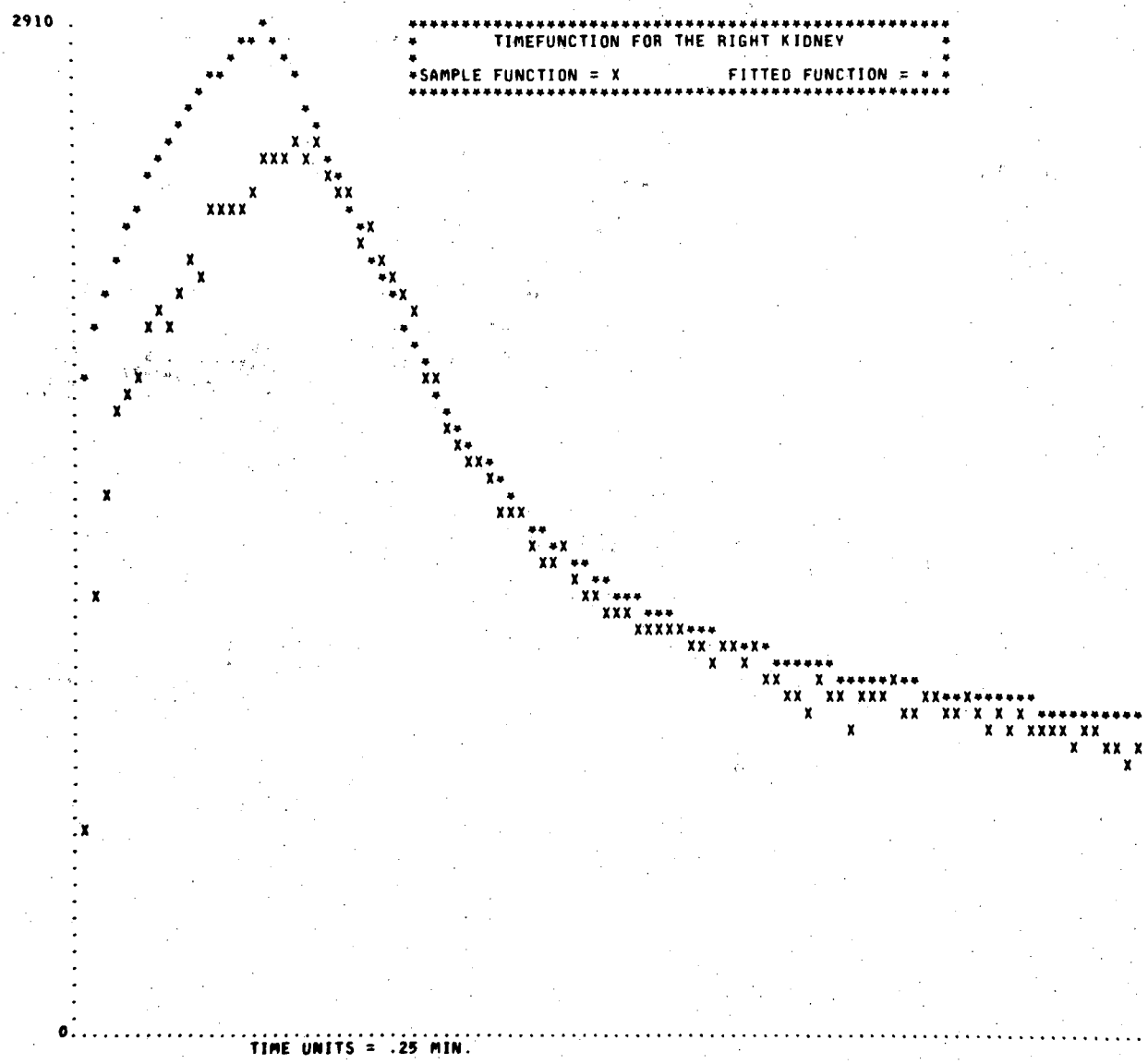
2910
0
TIME UNITS = .25 MIN.
TIMEFUNCTION FOR THE RIGHT KIDNEY
SAMPLE FUNCTION = X
FITTED FUNCTION = * *

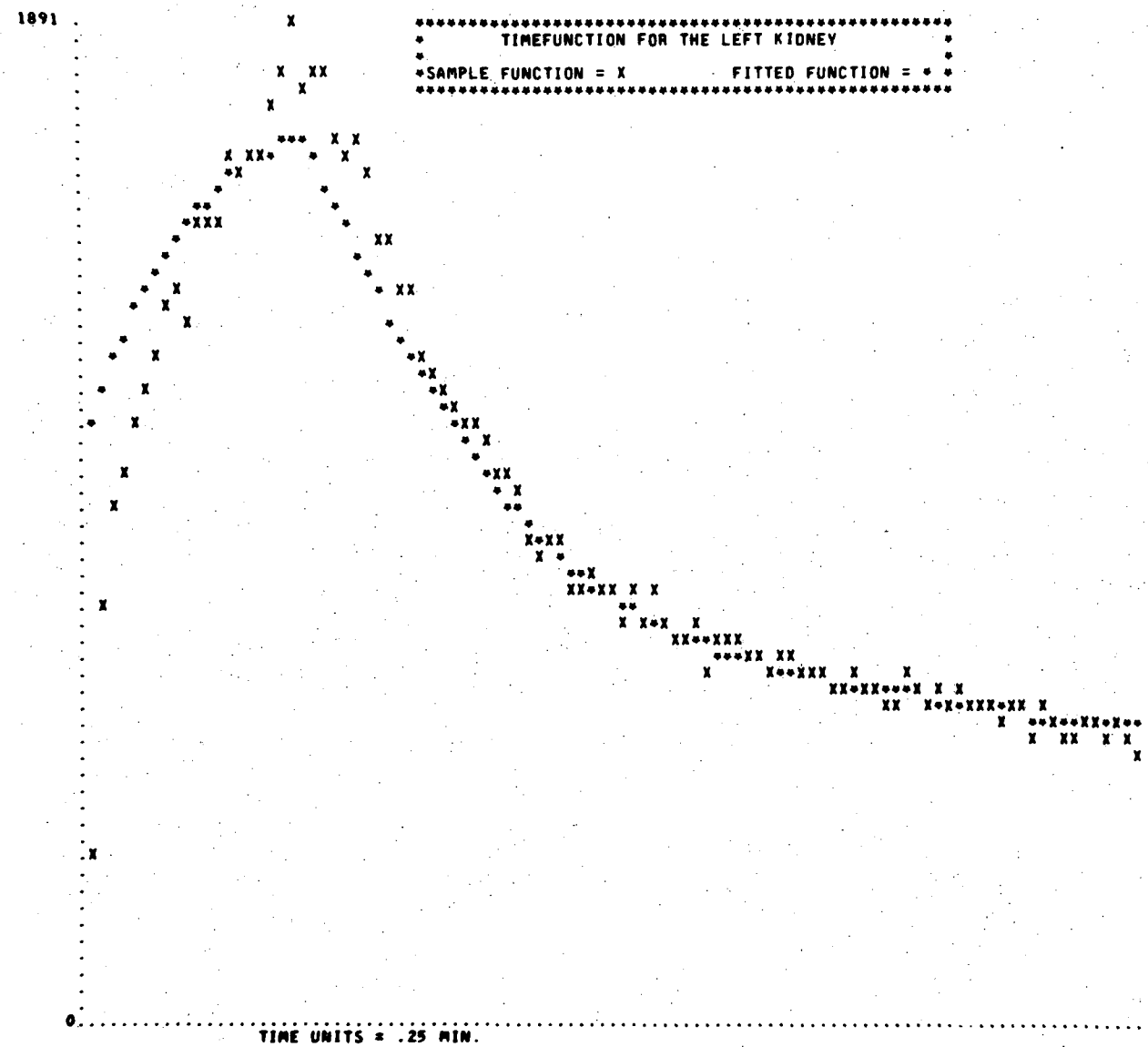
1891
0
TIME UNITS = .25 MIN.
TIMEFUNCTION FOR THE LEFT KIDNEY
SAMPLE FUNCTION = X
FITTED FUNCTION = *

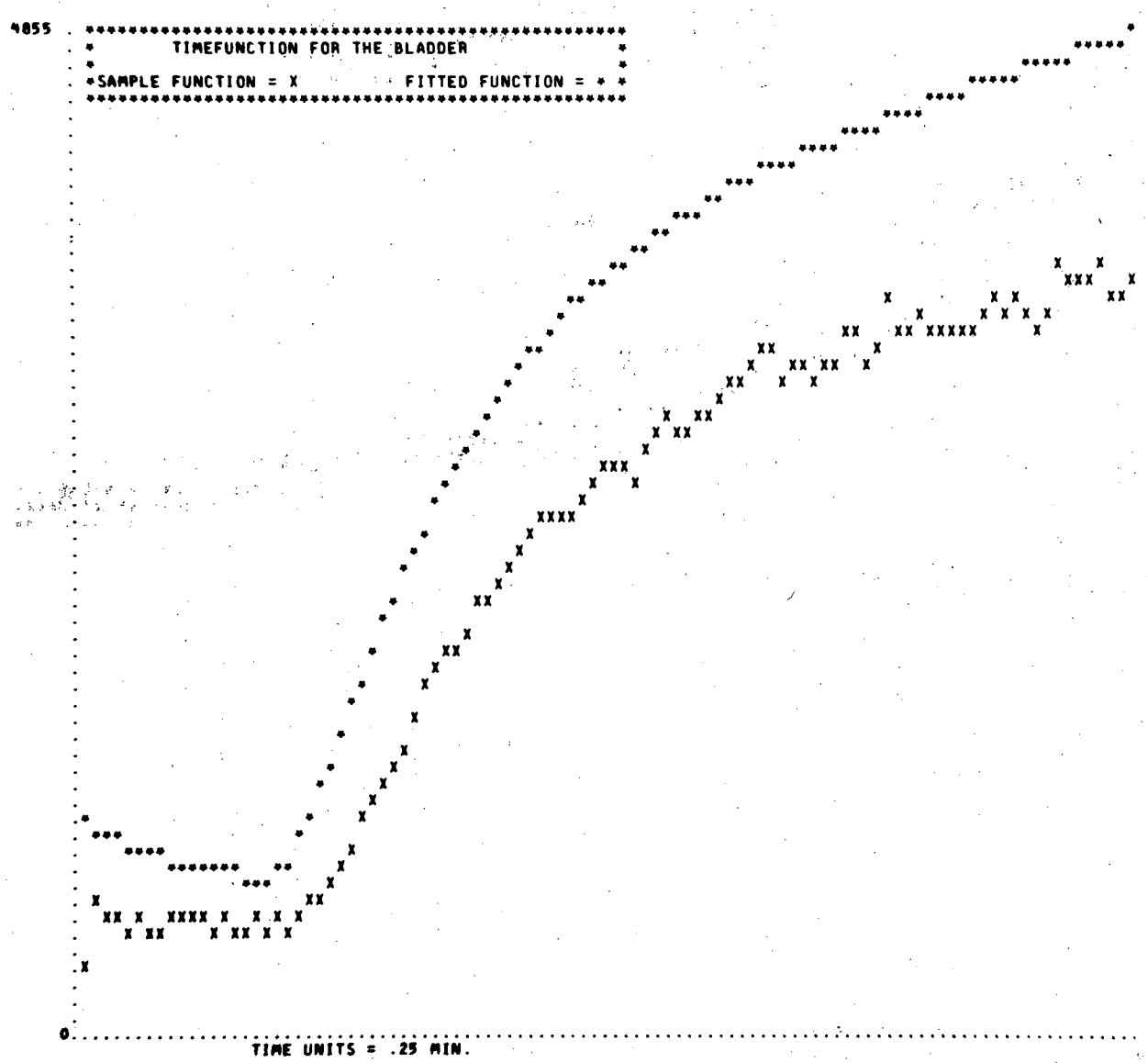
4855
TIMEFUNCTION FOR THE BLADDER
SAMPLE FUNCTION = X
FITTED FUNCTION = * *
0
TIME UNITS = .25 MIN.

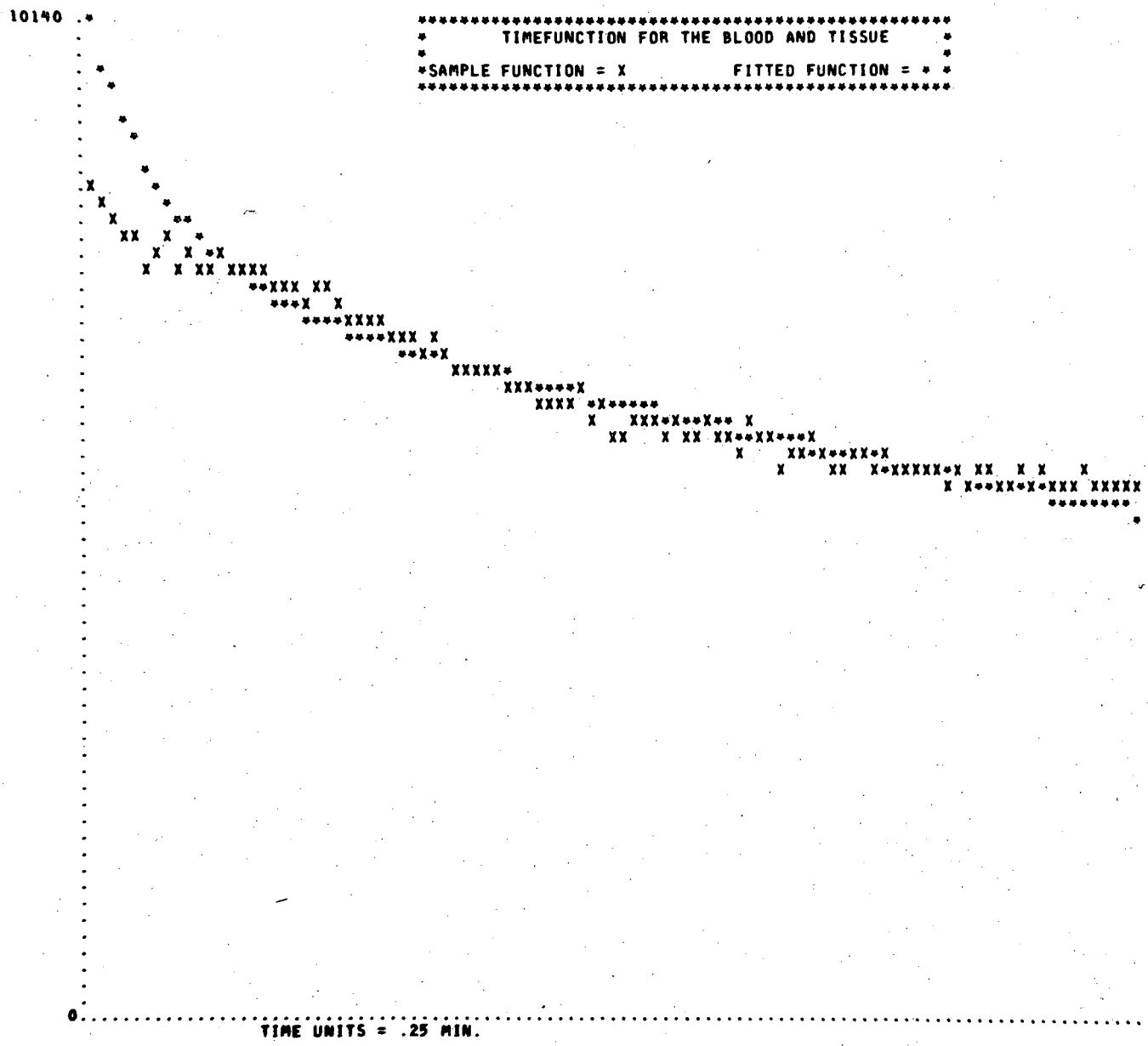
10140
0
TIME UNITS = .25 MIN.
TIMEFUNCTION FOR THE BLOOD AND TISSUE
SAMPLE FUNCTION = X
FITTED FUNCTION = *

*****INITIAL ESTIMATES FOR THE PARAMETERS*****

PARAMETERS	SYMBOL	VALUE
GLOMERULAR FILTRATION RATE(RIGHT KIDNEY)	A(4)	.01000
FLOW RATE FROM BLOOD POOL TO TUBULAR CELLS(RIGHT KIDNEY)	A(3)	.08000
GLOMERULAR FILTRATION RATE(LEFT KIDNEY)	A(7)	.01000
FLOW RATE FROM BLOOD POOL TO TUBULAR CELLS(LEFT KIDNEY)	A(6)	.04000
RIGHT KIDNEY		
TUBULAR CELL FLOW RATE	A(5)	.37000
ESTUARY DELAY TIME	A(13)	4.64000
LEFT KIDNEY		
TUBULAR CELL FLOW RATE	A(8)	.35000
ESTUARY DELAY TIME	A(14)	5.18000
FLOW RATE FROM BLOOD POOL TO EXTRAVASCULAR POOL	A(1)	.36000
FLOW RATE FROM EXTRAVASCULAR POOL TO BLOOD POOL	A(2)	.06000
AMOUNT AT TIME ZERO IN THE BLOOD POOL	A(9)	8977.00000
AMOUNT AT TIME ZERO IN THE EXTRA VASCULAR POOL	A(10)	-1000.00000
AMOUNT AT TIME ZERO IN THE RIGHT KIDNEY TUBULAR CELLS	A(11)	500.00000
AMOUNT AT TIME ZERO IN THE LEFT KIDNEY TUBULAR CELLS	A(12)	264.00000

FUNCTIONAL RELATIONSHIP BETWEEN THE TIMEFUNCTIONS AND THE COMPARTMENTS -

TF1 = Q3 + Q4 + A(15)*(Q1 + Q2) = Q3 + Q4 + .16*(Q1 + Q2)

TF2 = Q6 + Q7 + A(16)*(Q1 + Q2) = Q6 + Q7 + .10*(Q1 + Q2)

TF3 = Q5 + A(17)*(Q1 + Q2) = Q5 + .14*(Q1 + Q2)

TF4 = A(18)*(Q1 + Q2) = 1.32*(Q1 + Q2)

WHERE

TF1 - RIGHT KIDNEY
TF2 - LEFT KIDNEY
TF3 - BLADDER
TF4 - BLOOD AND TISSUE

Q1 - BLOOD POOL
Q2 - EXTRA VASCULAR POOL
Q3 - RIGHT KIDNEY TUBULAR CELLS
Q4 - RIGHT KIDNEY ESTUARY
Q5 - BLADDER
Q6 - LEFT KIDNEY TUBULAR CELLS
Q7 - LEFT KIDNEY ESTUARY

MF= 4.31E+04

I	A(I)	XLINMAX
1	.36	.10
2	.06	.10
3	.08	.10
4	.01	.10
5	.37	.10
6	.04	.10
7	.01	.10
8	.35	.10
9	8977.00	50.00
10	-1000.00	50.00
11	500.00	50.00
12	264.00	50.00
13	4.64	1.00
14	5.18	1.00
15	.16	.10
16	.10	.10
17	.14	.10
18	1.32	.10

ITERATION 1

K1	HF(XLAM)	XLAM
	34310.8413	1.00E-02
	37712.1358	1.00E-03

I	PARAMETER A(I)	GRADIANT	CORRECTION VECTOR Z(I)
1	.36000	-1.37E+05	.00503
2	.06000	2.13E+05	-.00182
3	.08000	5.67E+05	.00032
4	.01000	7.98E+05	-.00068
5	.37000	5.22E+04	-.01167
6	.04000	3.58E+05	.00134
7	.01000	6.21E+05	.00088
8	.35000	3.17E+04	-.00375
9	8977.00000	3.08E+01	30.75077
10	-1000.00000	2.28E+01	17.71437
11	500.00000	6.48E+01	-50.00000
12	264.00000	5.54E+01	-37.44209
13	4.64000	-1.00E+04	.01628
14	5.18000	-6.33E+03	.02307
15	.16000	1.22E+05	-.00276
16	.10000	5.01E+04	-.00209
17	.14000	4.57E+05	-.00697
18	1.32000	1.67E+04	-.01482

ITERATION 2

K1	HF(XLAM)	XLAM
	27009.4485	1.00E-02
	30271.4055	1.00E-03

I	PARAMETER A(I)	GRADIANT	CORRECTION VECTOR Z(I)
1	.36503	-1.20E+05	.00524
2	.05818	1.93E+05	-.00186
3	.08032	4.96E+05	.00050
4	.00932	7.02E+05	-.00064
5	.35833	4.67E+04	-.01081
6	.04134	3.16E+05	.00143
7	.01088	5.46E+05	.00091
8	.34625	2.76E+04	-.00368
9	9007.75077	2.65E+01	36.20351
10	-982.28563	1.93E+01	20.73156
11	450.00000	5.65E+01	-50.00000
12	226.55791	4.84E+01	-38.08659
13	4.65628	-8.47E+03	.01934
14	5.20307	-5.54E+03	.02295
15	.15724	1.08E+05	-.00280
16	.09791	4.40E+04	-.00203
17	.13303	4.04E+05	-.00673
18	1.30518	1.48E+04	-.01530

```
                    ***ITERATION  60***

                 ***********************************
                 *  K1      HF(XLAM)          XLAM    *
                 *           3926.5961      1.00E-02  *
                 *           3926.5961      1.00E-03  *
                 ***********************************
```

I	PARAMETER A(I)	GRADIANT	CORRECTION VECTOR Z(I)
1	.72459	-4.10E-01	.00004
2	.03501	-3.89E-01	.00000
3	.19684	-8.08E-01	.00001
4	.01566	2.98E-02	.00000
5	.27828	-1.01E-03	.00000
6	.14843	-9.56E-01	.00001
7	.01436	-1.14E-01	-.00000
8	.28186	2.60E-02	-.00000
9	10663.51648	-1.47E-05	.05295
10	-226.41810	-6.94E-07	-.00087
11	-599.81471	3.60E-05	-.04167
12	-542.76017	2.04E-05	-.02863
13	5.31730	-9.61E-03	.00005
14	5.05970	3.08E-03	-.00005
15	.11337	1.89E-02	-.00000
16	.06952	3.65E-02	-.00000
17	.07473	6.10E-03	.00000
18	1.05558	-7.37E-02	.00000

THE SOLUTION CONVERGED ON ITERATION 60.

*****THE PARAMETERS ARE*****

PARAMETERS	SYMBOL	VALUE
GLOMERULAR FILTRATION RATE(RIGHT KIDNEY)	A(4)	.01566
FLOW RATE FROM BLOOD POOL TO TUBULAR CELLS(RIGHT KIDNEY)	A(3)	.19685
GLOMERULAR FILTRATION RATE(LEFT KIDNEY)	A(7)	.01436
FLOW RATE FROM BLOOD POOL TO TUBULAR CELLS(LEFT KIDNEY)	A(6)	.14845
RIGHT KIDNEY		
TUBULAR CELL FLOW RATE	A(5)	.27828
ESTUARY DELAY TIME	A(13)	5.31735
LEFT KIDNEY		
TUBULAR CELL FLOW RATE	A(8)	.28186
ESTUARY DELAY TIME	A(14)	5.05965
FLOW RATE FROM BLOOD POOL TO EXTRAVASCULAR POOL	A(1)	.72463
FLOW RATE FROM EXTRAVASCULAR POOL TO BLOOD POOL	A(2)	.03501
AMOUNT AT TIME ZERO IN THE BLOOD POOL	A(9)	10663.56943
AMOUNT AT TIME ZERO IN THE EXTRA VASCULAR POOL	A(10)	-226.41897
AMOUNT AT TIME ZERO IN THE RIGHT KIDNEY TUBULAR CELLS	A(11)	-599.85637
AMOUNT AT TIME ZERO IN THE LEFT KIDNEY TUBULAR CELLS	A(12)	-542.78880

FUNCTIONAL RELATIONSHIP BETWEEN THE TIMEFUNCTIONS AND THE COMPARTMENTS -

TF1 = Q3 + Q4 + A(15)*(Q1 + Q2) = Q3 + Q4 + .11*(Q1 + Q2)

TF2 = Q6 + Q7 + A(16)*(Q1 + Q2) = Q6 + Q7 + .07*(Q1 + Q2)

TF3 = Q5 + A(17)*(Q1 + Q2) = Q5 + .07*(Q1 + Q2)

TF4 = A(18)*(Q1 + Q2) = 1.06*(Q1 + Q2)

WHERE

TF1 - RIGHT KIDNEY
TF2 - LEFT KIDNEY
TF3 - BLADDER
TF4 - BLOOD AND TISSUE

Q1 - BLOOD POOL
Q2 - EXTRA VASCULAR POOL
Q3 - RIGHT KIDNEY TUBULAR CELLS
Q4 - RIGHT KIDNEY ESTUARY
Q5 - BLADDER
Q6 - LEFT KIDNEY TUBULAR CELLS
Q7 - LEFT KIDNEY ESTUARY

*****STATISTICAL ASPECTS OF THE MODEL*****

THE ERROR IS 3.9266E+03

THE GOODNESS OF FIT IS THE FOLLOWING TEST OF HYPOTHESIS

HYPOTHESIS = THE MODEL FITS THE DATA

ALTERNATE HYPOTHESIS = THE MODEL DOES NOT FIT THE DATA

-THE HYPOTHESIS IS REJECTED IF THE ERROR IS GREATER THAN 467.77.
-THIS IS A .0102 PROBABILITY THAT THE HYPOTHESIS IS REJECTED GIVEN THAT IT IS TRUE.
-THEREFORE THIS DATA SAMPLE DOES NOT SATISFY THE HYPOTHESIS.

THE COVARIANCE MATRIX

2.49E-06													
4.98E-07	9.46E-08												
1.62E-06	2.04E-08	7.38E-07											
9.05E-07	8.33E-08	-5.17E-07	6.92E-07										
7.29E-06	7.23E-07	3.90E-06	-3.06E-06	1.34E-05									
6.82E-06	7.17E-08	2.07E-06	-4.17E-07	4.20E-07	1.41E-06								
-3.73E-07	5.75E-08	3.03E-07	-7.55E-07	6.84E-07	-7.77E-07	8.55E-07							
1.20E-05	9.35E-07	-1.99E-07	1.44E-06	-6.94E-07	5.51E-06	-4.26E-06	2.07E-05						
-1.21E-03	5.03E-05	-2.38E-04	1.74E-04	-1.42E-03	-2.33E-04	3.93E-05	-1.46E-03	7.69E+01					
-1.63E+04	-1.68E+03	9.43E+03	7.50E+02	-9.44E-10	7.11E+03	6.88E+02	6.03E-09	-5.11E+08	5.11E+08				
-2.91E-02	1.00E-03	-2.33E-02	-3.94E-03	-8.93E-03	-7.87E-03	2.02E-03	1.26E-02	-1.27E+02	-4.64E+01	1.73E+02			
-4.89E-02	9.93E-04	-2.21E-02	7.80E-04	3.38E-03	-2.12E-02	-2.22E-03	-6.55E-03	-2.26E+02	1.73E+00	9.14E+01	1.32E+02		
-2.29E-04	-7.91E-06	-1.00E-03	9.62E-04	1.81E-04	-2.56E-05	1.72E-05	-3.08E-05	-1.83E+00	1.51E+00	2.72E-01	5.29E-02	2.34E-02	
-8.83E-05	4.42E-06	1.38E-04	-2.16E-04	-7.69E-05	-8.90E-04	7.98E-04	2.83E-04	2.26E+00	-2.47E+00	-1.62E-02	2.35E-01	-5.67E-03	2.75E-02
6.92E-06	7.24E-07	1.31E-04	-1.33E-04	-3.80E-08	-4.58E-06	1.02E-06	-6.12E-08	2.62E-01	-2.32E-01	-6.79E-02	-9.37E-04	-3.21E-03	4.54E-05
6.43E-06	-5.00E-04	-5.15E-05	-4.19E-03	4.42E-03	-1.17E-06	3.78E-03	-3.46E-03	2.22E-06	-1.57E+01	1.57E+01	2.19E+00	-2.19E+00	1.06E-01
-1.18E-01	-2.10E-04	2.10E-04	7.44E-05	7.46E-06	6.08E-04	-6.42E-04	7.55E-08	-5.50E-04	5.04E-04	-8.90E-08	2.28E+00	-2.28E+00	-3.18E-01
3.18E-01	-1.54E-02	1.71E-02	3.04E-05	-3.05E-05	3.93E-07	-6.63E-04	-6.79E-05	-1.85E-02	1.88E-02	-3.89E-06	-1.39E-03	1.83E-03	-4.28E-06
-3.14E+01	2.09E+01	9.33E+00	1.13E+00	4.53E-01	6.04E-02	-7.80E-04	-3.84E-05	7.49E-05	1.06E-03				

THE ABSOLUTE RATIO OF SIGNAL/VARIANCE

I	A(I)/VAR(A(I))
1	2.91E+05
2	3.70E+05
3	2.67E+05
4	2.26E+04
5	2.08E+04
6	1.05E+05
7	1.68E+04
8	1.36E+04
9	1.35E+02
10	4.43E-07
11	3.47E+00
12	4.12E+00
13	2.27E+02
14	1.84E+02
15	1.76E+04
16	3.32E+02
17	1.90E+05
18	9.99E+02

*****THE FITTED DATA*****

I	T(I) TIME(MINS)	BLOOD AND TISSUE COUNTS/15 SEC	RIGHT KIDNEY COUNTS/15 SEC	LEFT KIDNEY COUNTS/15 SEC	BLADDER COUNTS/15 SEC
1	.25	10093.7321	979.6544	501.4597	714.6276
2	.50	9391.1181	1281.0791	743.9169	664.8831
3	.75	8855.3615	1510.9211	928.7952	626.9520
4	1.00	8445.6251	1686.6999	1070.1866	597.9430
5	1.25	8131.0703	1821.6453	1178.7328	575.6728
6	1.50	7888.4084	1925.7484	1262.4703	558.4925
7	1.75	7700.0525	2006.5539	1327.4679	545.1571
8	2.00	7552.7219	2069.7595	1378.3086	534.7262
9	2.25	7436.3869	2119.6677	1418.4534	526.4898
10	2.50	7343.4736	2159.5279	1450.5158	519.9116
11	2.75	7268.2625	2191.7938	1476.4696	514.5867
12	3.00	7206.4342	2218.3185	1497.8052	510.2094
13	3.25	7154.7269	2240.5011	1515.6483	506.5485
14	3.50	7110.6772	2259.3987	1530.8489	503.4298
15	3.75	7072.4249	2275.8091	1544.0490	500.7216
16	4.00	7038.5652	2290.3350	1555.7333	498.3244
17	4.25	7008.0372	2303.4317	1566.2678	496.1630
18	4.50	6980.0396	2315.4428	1575.9292	494.1808
19	4.75	6953.9674	2326.6279	1584.9262	492.3349
20	5.00	6929.3635	2337.1831	1593.4165	490.5930
21	5.25	6905.8828	2347.2564	1596.1661	494.2836
22	5.50	6883.2647	2350.0834	1583.7009	519.8288
23	5.75	6861.3122	2331.8375	1560.2925	576.9219
24	6.00	6839.8766	2298.2632	1529.5381	656.3260
25	6.25	6818.8454	2254.3923	1494.0918	750.4341
26	6.50	6798.1339	2203.9388	1455.8997	853.6457
27	6.75	6777.6779	2149.6273	1416.3774	961.8659
28	7.00	6757.4289	2093.4408	1376.5434	1072.1272
29	7.25	6737.3502	2036.8070	1337.1199	1182.3056
30	7.50	6717.4142	1980.7392	1298.6081	1290.9058
31	7.75	6697.5997	1925.9421	1261.3460	1396.9002
32	8.00	6677.8911	1872.8911	1225.5507	1499.6073
33	8.25	6658.2761	1821.8928	1191.3505	1598.6007
34	8.50	6638.7458	1773.1293	1158.8093	1693.6408
35	8.75	6619.2931	1726.6924	1127.9446	1784.6232
36	9.00	6599.9128	1682.6085	1098.7407	1871.5408
37	9.25	6580.6008	1640.8578	1071.1593	1954.4547
38	9.50	6561.3542	1601.3879	1045.1462	2033.4736
39	9.75	6542.1704	1564.1246	1020.6374	2108.7373
40	10.00	6523.0478	1528.9795	997.5628	2180.4056
41	10.25	6503.9848	1495.8556	975.8494	2248.6496
42	10.50	6484.9804	1464.6515	955.4230	2313.6456
43	10.75	6466.0337	1435.2642	936.2104	2375.5705
44	11.00	6447.1440	1407.5916	918.1396	2434.5988
45	11.25	6428.3106	1381.5334	901.1411	2490.9006
46	11.50	6409.5333	1356.9928	885.1484	2544.6397
47	11.75	6390.8114	1333.8767	870.0979	2595.9731
48	12.00	6372.1448	1312.0963	855.9292	2645.0503
49	12.25	6353.5331	1291.5669	842.5852	2692.0129
50	12.50	6334.9761	1272.2088	830.0121	2736.9949
51	12.75	6316.4735	1253.9465	818.1594	2780.1226
52	13.00	6298.0251	1236.7089	806.9795	2821.5145
53	13.25	6279.6307	1220.4293	796.4278	2861.2823
54	13.50	6261.2902	1205.0450	786.4626	2899.5304
55	13.75	6243.0032	1190.4974	777.0448	2936.3567
56	14.00	6224.7698	1176.7314	768.1379	2971.8529
57	14.25	6206.5896	1163.6956	759.7079	3006.1046

58	14.50	6188.4626	1151.3418	751.7227	3039.1920
59	14.75	6170.3886	1139.6250	744.1528	3071.1898
60	15.00	6152.3673	1128.5033	736.9703	3102.1682
61	15.25	6134.3987	1117.9373	730.1493	3132.1922
62	15.50	6116.4826	1107.8904	723.6657	3161.3228
63	15.75	6098.6188	1098.3283	717.4970	3189.6170
64	16.00	6080.8072	1089.2191	711.6220	3217.1277
65	16.25	6063.0476	1080.5330	706.0213	3243.9046
66	16.50	6045.3399	1072.2421	700.6765	3269.9939
67	16.75	6027.6839	1064.3204	695.5706	3295.4386
68	17.00	6010.0795	1056.7437	690.6878	3320.2790
69	17.25	5992.5265	1049.4894	686.0132	3344.5527
70	17.50	5975.0247	1042.5363	681.5331	3368.2946
71	17.75	5957.5741	1035.8648	677.2345	3391.5374
72	18.00	5940.1745	1029.4565	673.1056	3414.3116
73	18.25	5922.8256	1023.2943	669.1350	3436.6456
74	18.50	5905.5275	1017.3621	665.3124	3458.5659
75	18.75	5888.2798	1011.6451	661.6281	3480.0972
76	19.00	5871.0825	1006.1293	658.0730	3501.2627
77	19.25	5853.9355	1000.8017	654.6387	3522.0838
78	19.50	5836.8385	995.6502	651.3173	3542.5807
79	19.75	5819.7915	990.6635	648.1016	3562.7720
80	20.00	5802.7942	985.8311	644.9846	3582.6753
81	20.25	5785.8466	981.1432	641.9599	3602.3069
82	20.50	5768.9485	976.5905	639.0218	3621.6819
83	20.75	5752.0998	972.1644	636.1646	3640.8146
84	21.00	5735.3002	967.8571	633.3831	3659.7183
85	21.25	5718.5497	963.6610	630.6726	3678.4052
86	21.50	5701.8482	959.5692	628.0286	3696.8870
87	21.75	5685.1954	955.5752	625.4468	3715.1744
88	22.00	5668.5913	951.6729	622.9235	3733.2775
89	22.25	5652.0356	947.8568	620.4549	3751.2055
90	22.50	5635.5283	944.1214	618.0377	3768.9674
91	22.75	5619.0692	940.4619	615.6688	3786.5712
92	23.00	5602.6582	936.8738	613.3451	3804.0247
93	23.25	5586.2951	933.3527	611.0640	3821.3348
94	23.50	5569.9798	929.8946	608.8229	3838.5083
95	23.75	5553.7122	926.4958	606.6193	3855.5514
96	24.00	5537.4920	923.1528	604.4512	3872.4699
97	24.25	5521.3193	919.8625	602.3164	3889.2692
98	24.50	5505.1937	916.6216	600.2129	3905.9543
99	24.75	5489.1153	913.4275	598.1390	3922.5300
100	25.00	5473.0838	910.2775	596.0930	3939.0007

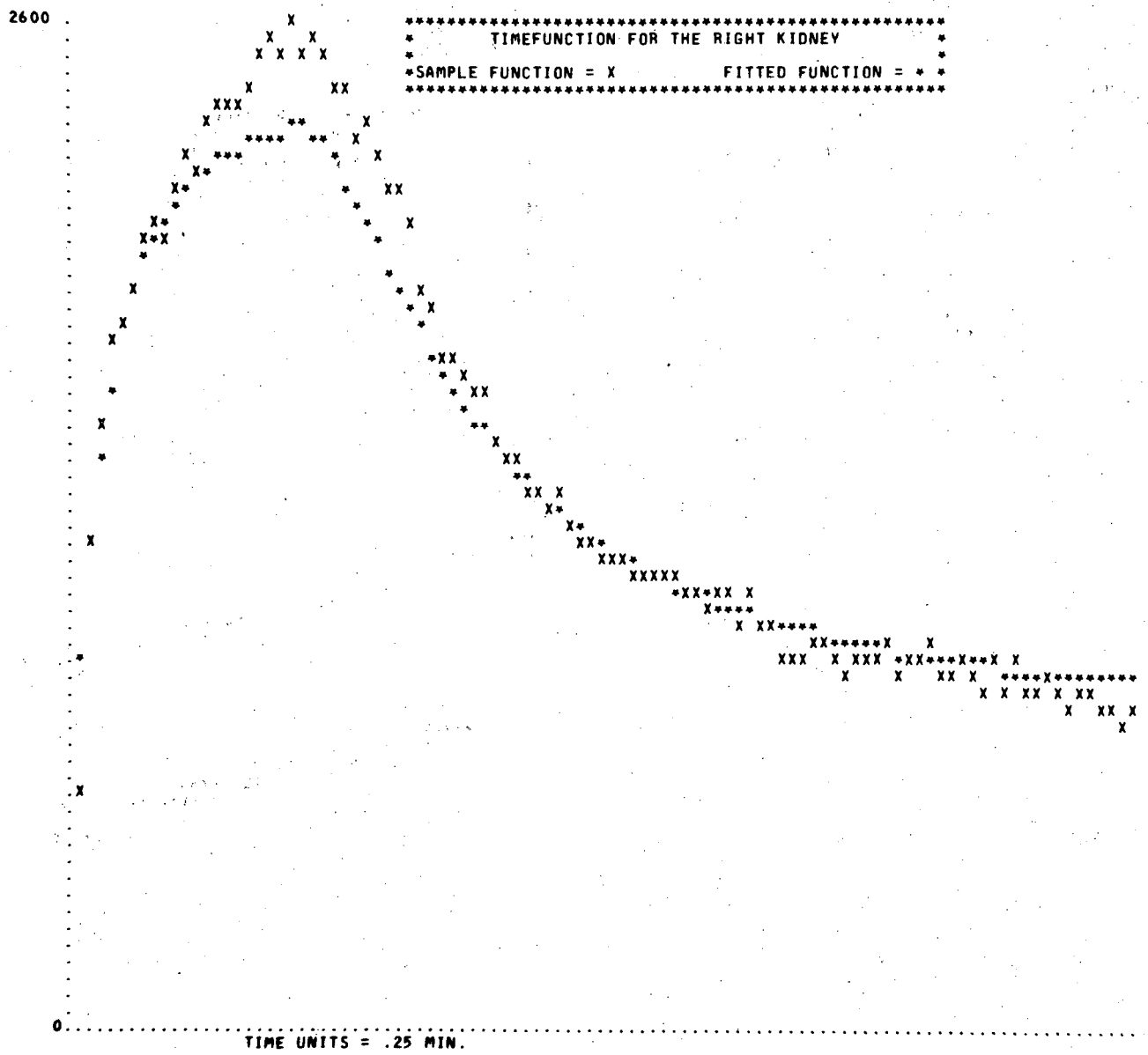
2600
0
TIMEFUNCTION FOR THE RIGHT KIDNEY
SAMPLE FUNCTION = X
FITTED FUNCTION = *
TIME UNITS = .25 MIN.

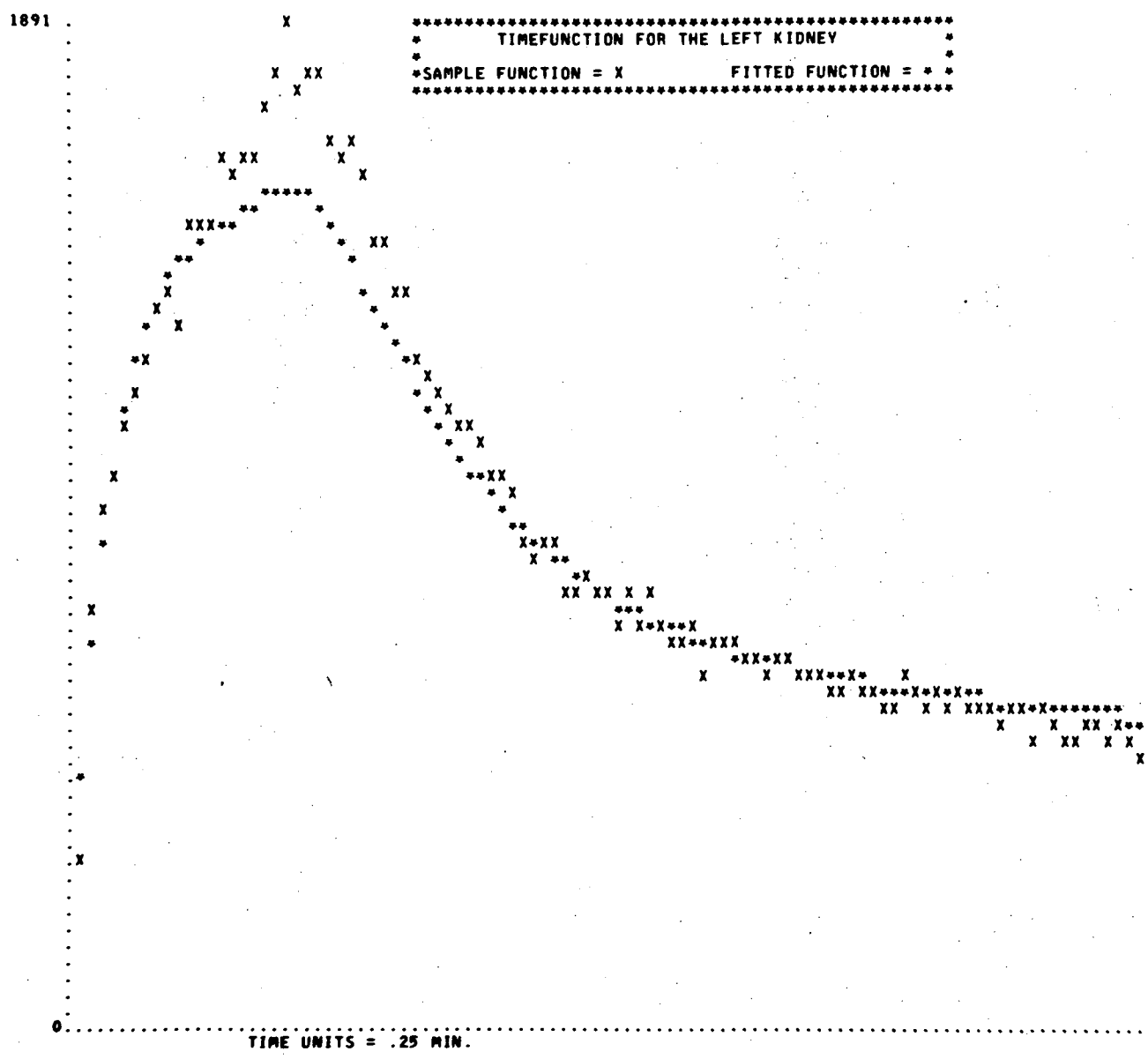
1891
0
TIMEFUNCTION FOR THE LEFT KIDNEY
SAMPLE FUNCTION = X
FITTED FUNCTION = *
TIME UNITS = .25 MIN.

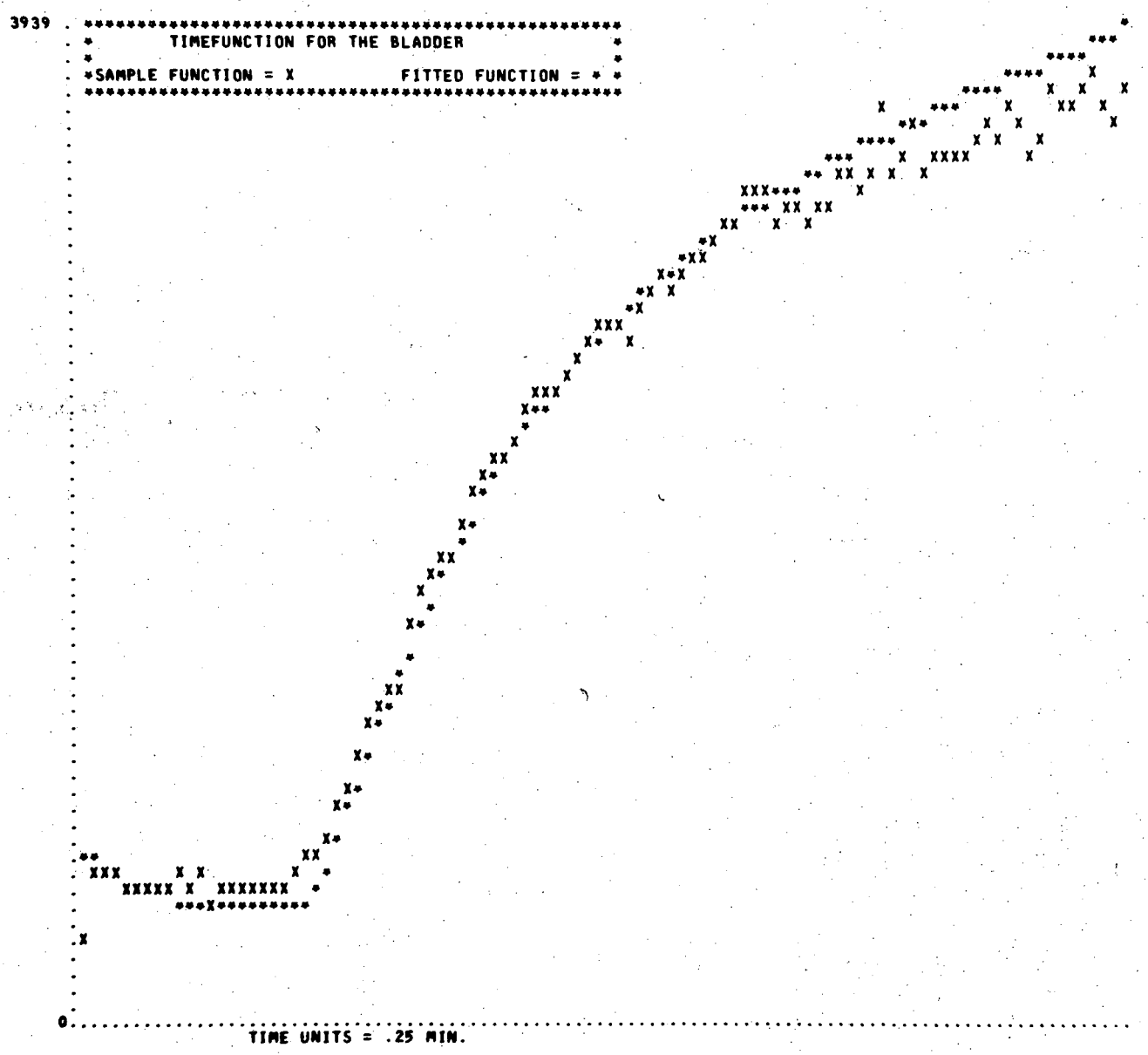
3939
TIMEFUNCTION FOR THE BLADDER
SAMPLE FUNCTION = X
FITTED FUNCTION = *
0
TIME UNITS = .25 MIN.

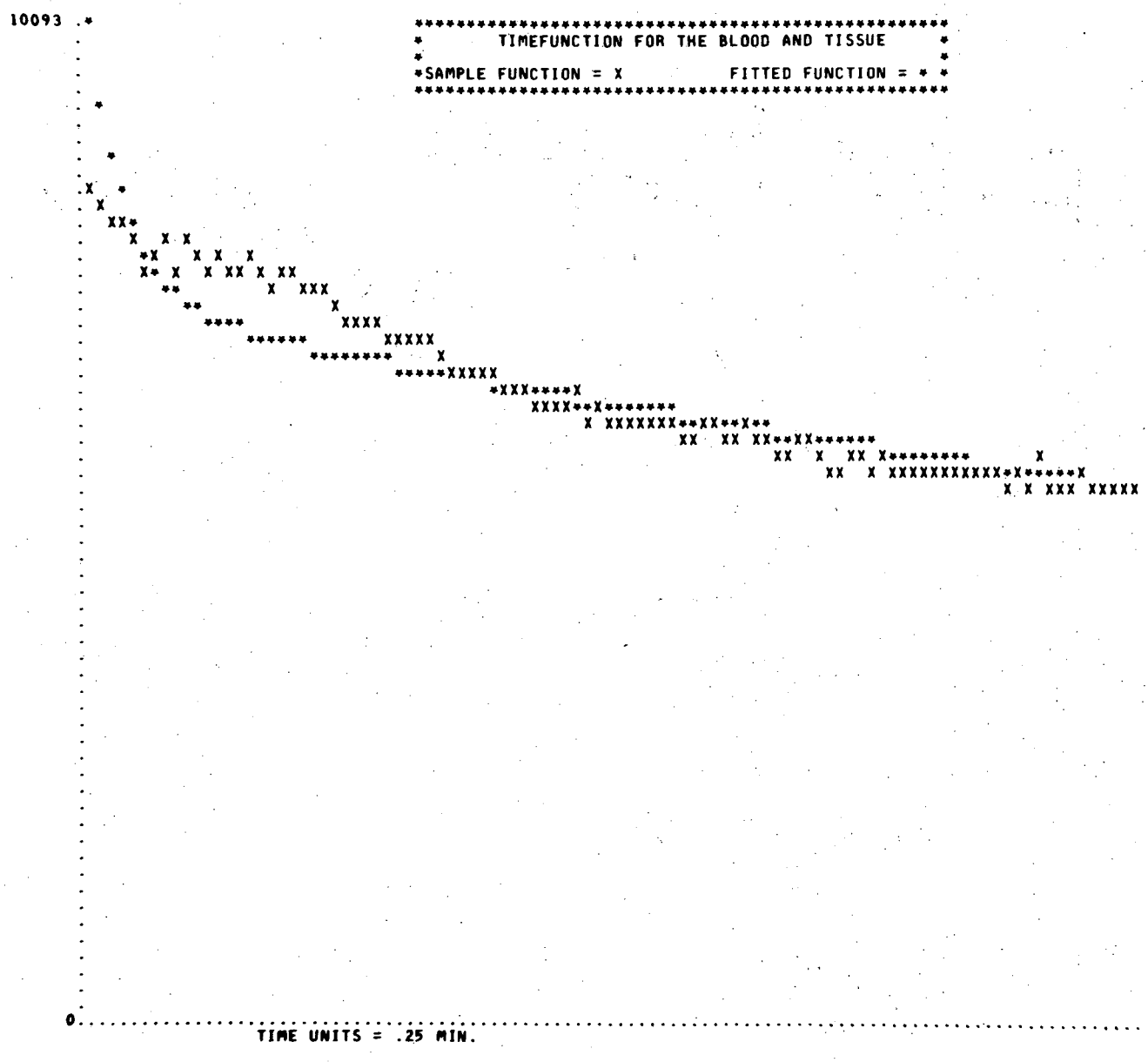
10093
TIMEFUNCTION FOR THE BLOOD AND TISSUE
SAMPLE FUNCTION = X
FITTED FUNCTION = *
0
TIME UNITS = .25 MIN.

COSMIC DOG 1
SEPT 6, 1973

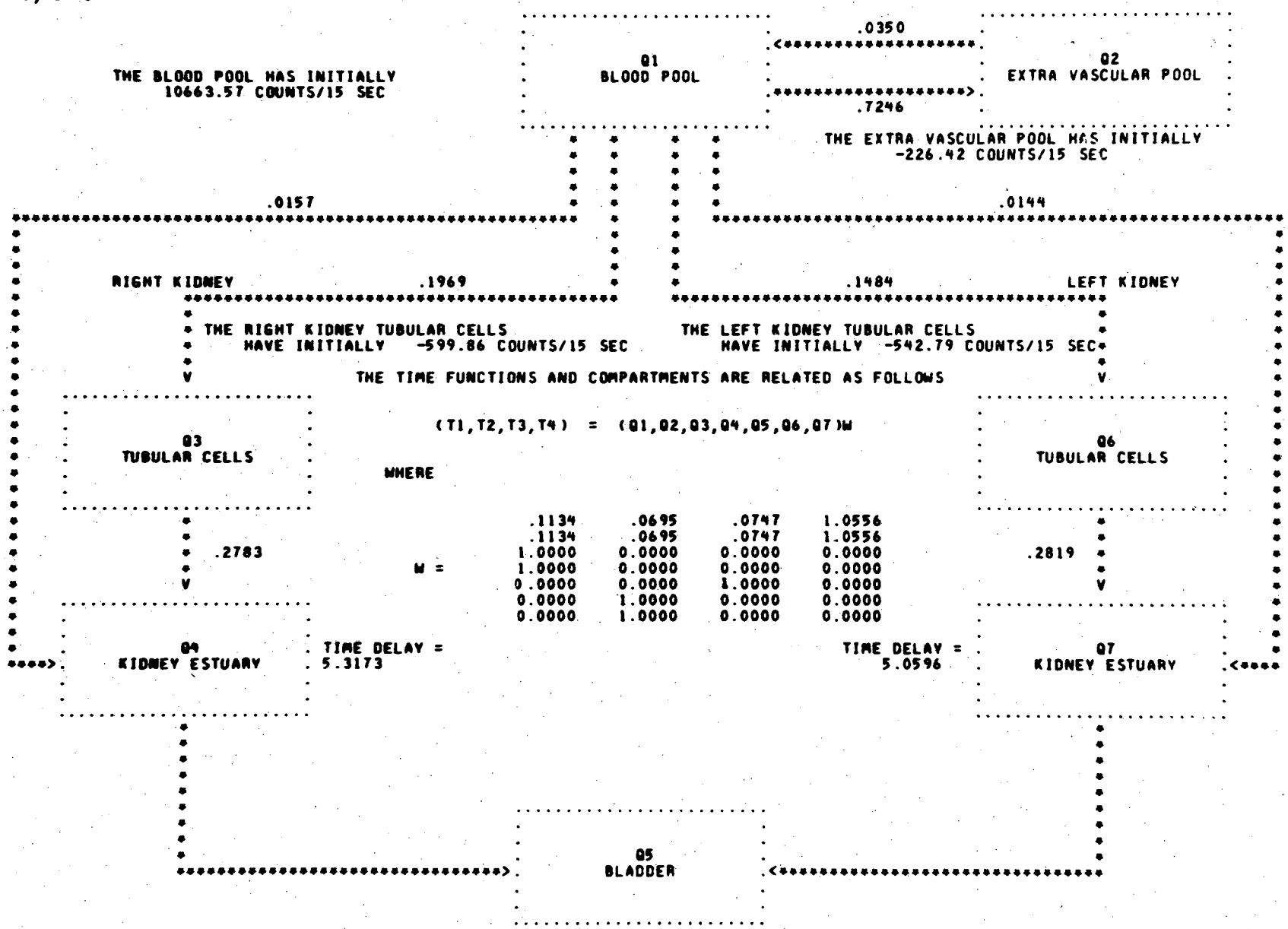

BIBLIOGRAPHY

1. Joseph A. DeGrazia, Paul O. Scheibe, Peter E. Jackson, et al., Clinical Applications of a Kinetic Model of Hippurate Distribution and Renal Clearance, J. Nucl. Med., 15 (1974), pp 102-114.
2. T. F. Budinger and J. Harpootlian, Developments in Digital Computer Implementation in Nuclear Medicine Imaging, Computers and Biomedical Research, 8 (1975), pp 26-52.
3. D. W. Marquardt, An Algorithm for Least-Squares Estimation of Nonlinear Parameters, J. Soc. Indust. Appl. Math., 11 (1963), pp 431-441.
4. R. Bellman, Stability Theory of Differential Equations, McGraw-Hill, New York, 1953.
5. G. L. Atkins, Multicompartment Models for Biological Systems, Methuen & Co. Ltd., London, 1969.
6. M. R. Spiegal, Schaum's Outline of Theory and Problems of Laplace Transforms, McGraw-Hill, New York, 1965.
7. R. Deutsch, Estimation Theory, Prentice-Hall, Englewood Cliffs, N.J., 1965.
8. H. O. Hartley, The Modified Gauss-Newton Method for the Fitting of Non-linear Regression Functions by Least Squares, Technometrics, 3 (1961), pp 269-280.
9. D. W. Marquardt, Solution of Nonlinear Chemical Engineering Models, Chem. Eng. Progr., 55 (1959), pp 65-70.
10. C. W. Gear, Numerical Initial Value Problems in Ordinary Differential Equations, Prentice-Hall, Englewood Cliffs, N. J., 1971.

11. T. Lindmo, A. Skretting, K. F. Nakken, An Examination of Different Mathematical Models for Renal Function as Measured by ^{131}I-Hippuran Renography, Medical Physics, 1 (1974), pp 193-197.

12. R. F. Pitts, Physiology of the Kidney and Body Fluids, Year Book Medical Publishers, Chicago, 1974.

13. A. F. Fiacco and G. P. McCormick, Nonlinear Programming: Sequential Unconstrained Minimization Techniques, Wiley, New York, 1968.

14. M. D. Blaufox, A. L. Orvis, and C. A. Owen, Jr., Compartment Analysis of the Radiorenogram and Distribution of Hippuran I^{131} in Dogs, Am. J. Physiol.,204 (1963), pp 1059-1064.

15. K. E. Britton and N. J. G. Brown, The Clinical Use of C.A.B.B.S. Renography. Investigation of the "Non-Function Kidney" and Renal Artery Stenosis by the Use of ^{131}I Hippuran Renography Modified by Computer Assisted Blood Background Subtraction (C.A.B.B.S.), Brit. J. Radiol.,41 (1968), pp 570-579.

16. M. H. Farmelant, C. E. Sachs, and B. A. Burrows, The Influence of Tissue Background Radioactivity on the Apparent Renal Accumulation of Radioactive Compounds, J. Nucl. Med.,11 (1969), pp 112-117.

17. A. M. Holroyd, G. D. Chisholm, and H. I. Glass, The Quantitative Analysis of Renograms Using the Gamma Camera, Phys. Med. Biol., 15 (1970), pp 483-492.

18. M. D. Blaufox, E. J. Potchen, and J. P. Merrill, Measurement of Effective Renal Plasma Flow in Man by External Counting Methods, J. Nucl. Med., 8 (1967), pp 77-85.

19. T. F. Budinger and G. T. Gullberg, Three-Dimensional Reconstruction in Nuclear Medicine Emission Imaging, IEEE Trans. Nucl. Sci.,NS-21 (1974), pp 2-20.

20. S. E. Derenzo, H. Zaklad, and T. F. Budinger, Analytical Study of a High-Resolution Positron Ring Detector System for Transaxial Reconstruction Tomography, J. Nucl. Med., 16 (1975), pp 1166-1173.

21. CRC Handbook of Tables for Mathematics, R. C. West and S. M. Selby (Eds.). The Chemical Rubber Co., Cleveland, 1970.

This report was done with support from the United States Energy Research and Development Administration. Any conclusions or opinions expressed in this report represent solely those of the author(s) and not necessarily those of The Regents of the University of California, the Lawrence Berkeley Laboratory or the United States Energy Research and Development Administration.

TECHNICAL INFORMATION DIVISION
LAWRENCE BERKELEY LABORATORY
UNIVERSITY OF CALIFORNIA
BERKELEY, CALIFORNIA 94720