LBL-2904

PARITY NON-CONSERVING NUCLEAR FORCE

T. S. Chou
(Ph.D. thesis)

March 1974

Prepared for the U. S. Atomic Energy Commission
under Contract W-7405-ENG-48

TWO-WEEK LOAN COPY

This is a Library Circulating Copy which may be borrowed for two weeks. For a personal retention copy, call Tech. Info. Division, Ext. 5545

LAWRENCE BERKELEY LABORATORY
UNIVERSITY OF CALIFORNIA
BERKELEY

LBL-2904

DISCLAIMER

This document was prepared as an account of work sponsored by the United States Government. While this document is believed to contain correct information, neither the United States Government nor any agency thereof, nor the Regents of the University of California, nor any of their employees, makes any warranty, express or implied, or assumes any legal responsibility for the accuracy, completeness, or usefulness of any information, apparatus, product, or process disclosed, or represents that its use would not infringe privately owned rights. Reference herein to any specific commercial product, process, or service by its trade name, trademark, manufacturer, or otherwise, does not necessarily constitute or imply its endorsement, recommendation, or favoring by the United States Government or any agency thereof, or the Regents of the University of California. The views and opinions of authors expressed herein do not necessarily state or reflect those of the United States Government or any agency thereof or the Regents of the University of California.

TABLE OF CONTENTS

List of Figures v

Abstract vii

Introduction 1

Chapter I. Theory 5

I. Weak Interactions 5

II. The Parity Non-Conserving Nuclear Force 8

III. The Nuclear Structure Factor 10

IV. The Theory of Nuclear Polarization at Low Temperature . . . 11

V. Results of Theoretical Computations 13

Chapter II. Experimental Apparatus 16

I. Low Temperature Facilities 16

A. The Cryostat 16

B. The Magnets 16

C. The Control Units and Power Supply for Magnets 19

D. The Salt Pill 19

II. Sample Preparation 22

III. Detectors and Data Acquisition System 24

Chapter III. Experimental Background 27

I. Nuclear Structure of ^{180m}Hf 27

II. Magnetic Hyperfine Splitting of Hf in $ZrFe_2$ 29

III. Thermometry 30

A. ^{60}Co Thermometry 30

B. 444 keV Internal Thermometry 32

Chapter IV. Results and Discussion 33

I. Results 33

A. Homogeneity of the Sample 33

B. Activity 36

C. Linearity of Spectra 36

D. Background Subtraction 42

E. Data Handling 47

F. Data Analysis 49

II. Discussion 67

References 69

Appendix I. Gamma Matrices and Interactions 74

Appendix II. Anisotropy of 444 keV and Asymmetry of 501 keV Gamma Transition From Polarized ^{180m}Hf 77

Appendix III. Anisotropy of Gamma Decay From ^{60}Co(Fe) 97

Appendix IV. Gyromagnetic Ratio of ^{180m}Hf 105

Appendix V. Energy Levels of ^{180}Hf 110

Acknowledgments 112

LIST OF FIGURES

Fig. 1. Asymmetry of the 501 keV Gamma-Ray vs. Parity Mixing Ratio at Different Temperature.

Fig. 2. Cryostat with Polarizing Magnet.

Fig. 3. Detail of Polarizing Magnet.

Fig. 4. Schematic of Power Supply with Control Unit for Polarizing Magnet.

Fig. 5. Salt Pill Assembly.

Fig. 6. Electronic Block Diagram for Four Detector System.

Fig. 7. Electronic Block Diagram for Two Detector System.

Fig. 8. Energy Levels Scheme for 106 Neutrons and 72 Protons Nuclei in the Neighborhood of $^{180}_{72}Hf$.

Fig. 9. Partial Decay Scheme of ^{60}Co.

Fig. 10. The X-Ray Powder Spectrum of $Hf_{0.1}Zr_{0.9}Fe_2$.

Fig. 11. Relative Activity of ^{181}Hf to ^{180m}Hf From Natural Hafnium by Neutrons Capture at Various Radiation Times.

Fig. 12. Relative Activity of ^{181}Hf to ^{180m}Hf From Enriched Hafnium (86.98% ^{179}Hf) by Neutrons Capture at Various Radiation Times.

Fig. 13. The Electronic Blockage of Detector 1
The Solid Line is Normal Behavior Decay Curve Based on the Low Counting Region, While the Points are Experimental Data.

Fig. 14. The Electronic Blockage of Detector 2.

Fig. 15. The Gamma-Ray Spectrum of ^{180m}Hf From Ge(Li) Detector at the Beginning of the Experiment.

Fig. 16. The Gamma-Ray Spectrum of ^{180m}Hf From Ge(Li) Detector at the End of the Experiment.

Fig. 17. The Background Subtraction Process.

Fig. 18. The Gamma Spectra of ^{180m}Hf at Different Magnetic Field Direction.

*The abbreviation used in Figs. 15 and 16 are listed as follows:

PREAMP = Preamplifier

HRLA = High Rate Linear Amplifier

MDG = Mixer Delay Gate

SCA = Single Channel Analyzer

ADC = Analog to Digital Converter

DDG = Double Delay Gate

PARITY NON-CONSERVING NUCLEAR FORCE

T. S. Chou

Department of Chemistry and
Lawrence Berkeley Laboratory
University of California
Berkeley, California 94720

March 1974

ABSTRACT

The effect of parity non-conserving nuclear force is studied in a deformed nucleus, ^{180m}Hf. The big nuclear structure factor of the 501 keV gamma transition in the decay of ^{180m}Hf enables one to observe a big asymmetry of 1.5% at an average temperature of 20 mK°. The nuclear structure factor can arise by various mechanisms. For example, small energy spacing of the nuclear levels with opposite parity will cause a large mixing between them and/or the parity-allowed transition (in this case, M2) has an anomalously small matrix element while the parity-forbidden transition (E2) is not hindered. The low temperature necessary for producing polarized nuclei is achieved by adiabatic demagnetization of a chromium potassium sulfate-glycerin slurry which provides about 10 mK° heat sink. The ^{180m}Hf nucleus is polarized by a magnetic interaction of its dipole with the hyperfine field it sees in a cubic ferromagnetic compound, $ZrFe_2$, at low temperature.

The asymmetry is defined as the intensity ratio of the intensity difference in 180° and 0° with respect to its nuclear polarization direction to its average value:

$$a = 2 \cdot \frac{W(180) - W(0)}{W(180) + W(0)} = 2 \cdot \frac{G_1B_1A_1 + G_3B_3A_3}{1 + G_2B_2A_2 + G_4B_4A_4}$$

where G_k are determined from knowing the source-detector geometry; B_k are evaluated from the anisotropy of the 444 keV gamma transition in ^{180m}Hf; A_k are known from the transitions and the nuclear states involved; A_2 and A_4 are independent of parity mixing and their values can be obtained from an angular correlation experiment; A_1 and A_3 are proportional to the parity mixing ratio. So by measuring the asymmetry of the 501 keV gamma transition, one can evaluate the parity mixing ratio. Taking the slow warm-up of the sample into account, we derive the parity mixing ratio as 0.0290(19).

INTRODUCTION

After C. S. Wu *et al.*[1] succeeded in showing that parity is not conserved in weak interactions which are responsible for nuclear beta decay, searches for parity violation in strong and electromagnetic interactions have been carried out. In a nucleus the constituent neutrons and protons are bound together by strong and weak nuclear forces. All the experimental evidence indicates that parity is a good quantum number.

Based on Feynman and Gell-Mann's generalized theory of the weak interaction (Universal Fermi Interaction, UFI),[2] Blin-Stoyle[3] estimated the ratio F of the strength of the parity non-conserving force to that of the parity conserving force to be of the order 10^{-7}.

Wilkinson[4] was the first person to look into possible experimental ways to observe parity-violating effects in nuclear physics. These small effects can be detected in two ways:

A. Search for Violation of Absolute Selection Rules

Cases exist in which the transition probability between two nuclear levels is strictly zero if parity is conserved. If one observes any transition between these two levels, the observation will confirm parity violation and determine its magnitude.

The experiments have been carried out by alpha decay of ^{20}Ne and ^{16}O.[5-12] Consider the ^{16}O alpha decay from the 2- state to a 0+ state of ^{12}C. It is energetically possible, but the orbital angular momentum carried away by an alpha particle (which has zero spin) must be L = 2, and the corresponding parity even. It follows that the decay cannot take place since a change of parity is required. However, if there is admixed an amplitude F of the 2+ state then the decay can take place through that component of the wave function, with intensity proportional to F^2.

B. Searching for the Interference Term

Because all of the parity experiments in nuclear physics to date, in detecting the interference term, have looked at the outgoing gamma radiation, we will restrict our discussion to such experiments. The weak interaction Hamiltonian which gives rise to the parity non-conserving potential (PNC potential) will give an asymmetry in the angular distribution and a non-vanishing circular polarization of outgoing gamma radiation. The circular polarization can be detected from an unpolarized source. One can measure the circular polarization, for example, by looking at the intensity difference of gamma radiation scattered by a magnetized iron foil when the magnetization direction is reversed. This method utilizes the fact that the cross section of the compton scattering process is spin dependent. In order to observe the asymmetry in the angular distribution, one must prepare polarized nuclei. There are several review articles[13,14,15] which describe the detailed mechanisms behind the methods for polarizing nuclei. Generally, these can be classified as follows:

1. Dynamic Nuclear Polarization

So far only the following two methods have been applied in the parity experiment:

a. Polarized neutron capture. Experiments based on this technique have been carried out on ^{113}Cd, ^{107}Ag, ^{115}In, ^{1}H, ^{32}S, ^{207}Pb, ^{2}H.[16-20]

b. Polarization by optical pumping. ^{203}Hg has been polarized by optical pumping on this campus. Depolarization in high density samples due to the resonance trapping of optical pumping light prevents observation of the asymmetry from pumped ^{203}Hg.[21]

2. Thermal Equilibrium Nuclear Orientation

The universal way in this method is to polarize the nucleus in a ferromagnetic lattice at low temperature. The nucleus in the ferromagnetic site will see a hyperfine field[22,23] from its electrons which are polarized through exchange interaction from its ferromagnetically ordered environment. The most common hosts are Fe, Co, and Ni. But not every element is soluble in these transition elements. Hg and Hf, for example, are practically insoluble in iron. Hyperfine fields of these two elements in an iron lattice are found by ion implantation.

The hyperfine fields obtained by various methods have been tabulated by T. A. Koster and D. A. Shirley.[24]

3. Angular Correlation

Angular correlation exists because of angular momentum. The second radiation must correlate to the first radiation, which defines the polarization direction in our case, to preserve the angular momentum conservation. A general review can be found in Siegbahn's Alpha, Beta, and Gamma-Ray Spectroscopy.[25] There have been several attempts by angular correlation to study parity non-conservation in nuclear forces.[26,27]

The 482 keV gamma-ray from 5/2+ level in ^{181}Ta is the most extensively studied nuclear level both in experimental and theoretical respects. Calculations based on models of various degrees of sophistication are compared to the experimental results.[28,29,30] At least every one agrees the parity violation in this level is small. The first big parity violation effect was found in the 363 keV 5/2- level of ^{159}Tb. A conflicting report appeared a year later by another group.[32] In the same

year Krane et al.[33] investigated the 1142 keV 8- level of ^{180m}Hf by low temperature nuclear orientation in $ZrFe_2$. They found the asymmetry of the 501 keV transition was in agreement with the previous circular polarization measurements.[34,35] Kuphal[36] did the circular polarization on the 501 keV transition from ^{180m}Hf again, and confirmed the same results. Our results in several temperature regions are essentially the same as reported before. The parity mixing ratio of our result is 0.0290(19). The smallness of the asymmetry in the PNC parity experiment prevents a detailed temperature dependence study.

CHAPTER I

THEORY

I. Weak Interactions

Interactions so far discovered can be classified into four categories:

Categories	Relative Strength
1. Strong Interactions	1
2. Electromagnetic Interactions	10^{-2}
3. Weak Interactions	10^{-13}
4. Gravitational Interactions	10^{-38}

In the nuclear system, the contribution from the gravitational interactions can be ignored as shown clearly from its strength. The symmetry properties under CPT and some conservation law are listed in the following table. From this table we know that it is generally accepted that both strength and electromagnetic interactions have conserved charge conjugation, parity, and time reversal. Conservation of charge conjugation means the system is symmetric with respect to interchanging particles and anti-particles. Conservation of parity means the system is symmetric with respect to interchanging positive space coordinates into negative space coordinates. Conservation of time reversal means the system is symmetric with respect to interchanging the direction of the time flow.

The famous beta asymmetry from polarized ^{60}Co experiment of C. S. Wu *et al.*[1] showed that both C and P are maximally violated in beta decay. CP nonconservation in K_2°[37] decay showed that T may be violated, if the CPT theorem is true.

Table of the Symmetry Properties of Fundamental Interactions

	C	P	T	CHARGE CONSERVATIONS	LEPTON NO. CONSERVATION	ANGULAR MOMENTUM CONSERVATION	BARYON NO. CONSERVATION
STRONG INTERACTIONS	YES	YES	YES	YES	NOT APPLICABLE	YES	YES
ELECTROMAGNETIC INTERACTIONS	YES	YES	YES	YES	YES	YES	YES
WEAK INTERACTIONS	NO	NO	NO	YES	YES	YES	YES

The theory of weak interactions was first described in terms of the products of vector current by Fermi[38] before parity violation in weak interactions was discovered. Sudarsham, Marshak, and Feynman, Gell-Mann and Sakurai[39] included the axial vector current into the current known as the Universal Weak Interaction or Universal Fermi Interaction (UFI). The basic idea is that the weak interaction can be described in terms of the interactions of currents as a Quantum Electrodynamic theory (QED).

The validity of this theory has been under intensive experimental tests by various methods. A vivid account of this history was given by C. S. Wu's lecture in Proceeding of International School of Physics.[40] The weak interaction Hamiltonian H_w is taken to be of the current-current form:

$$H_w = - \frac{G}{2\sqrt{2}} \{J,J^+\} +$$

$$J = J^{(1)} + J^{(h)}$$

where $J^{(1)}$ is the leptonic current. $J^{(1)}$ in weak interactions usually stands for a charged current. The recent discovery of neutral currents in NAL and CERN[41,42] may stimulate further theoretical studies on the current formulation. $\{\ \}+$ is an anticommutator. J^+ is the hermitian conjugate of the current J. In the conventional vector-axial vector (V-A) current form:

$$J^{(1)} = \overline{\psi}_l \cdot \gamma_i (1 + \gamma_5) \cdot \psi_{\tilde{\nu}} \qquad i = 1,2,3,4$$

where $\overline{\psi}_1$ is a creation operator of leptons. γ is a Dirac spinor. $\gamma_5 = i \cdot \gamma_1 \cdot \gamma_2 \cdot \gamma_3 \cdot \gamma_4 \cdot \psi_{\tilde{\nu}}$ is an annihilation operator of antineutrinos.

Take muon decay for example:

$$\mu^+ \rightarrow e^+ + \tilde{\nu} + \nu$$

lepton no.	1	1	-1	1
baryon no.	0	0	0	0

$$H_w = -\frac{G}{2\sqrt{2}} (\overline{\psi}_{e^+} \cdot \gamma_i (1 + \gamma_5) \cdot \psi_\nu) \cdot (\overline{\psi}_{\tilde{\nu}} \cdot \gamma_i (1 + \gamma_5) \cdot \psi_{\mu^+}) - h.c.$$

where the neutrino is a neutral lepton and electrons and muons are charged leptons. It is clear that $J^{(l)}$ is composed only of charged currents. Since the discovery of neutral currents, it is the author's opinion that one should look at $J^{(h)}$ more carefully than does the conventional model, in which one assumes the form of hadronic current, $J^{(h)}$, to be like the form of leptonic current with appropriate coefficient (usually in terms of Cabibbo's angle). The details of its form will be presented in the next section. For the reader's convenience the γ matrices and interactions in terms of dimensional interactions, i.e., scalar, vector, ..., are provided in Appendix I.

II. The Parity Non-Conserving Nuclear Force

The parity non-conserving nuclear force (PNC nuclear force) can be derived from the Universal Fermi Interactions (UFI). In order to obtain the PNC nucleon-nucleon potential, one needs only to consider the hadronic currents,

$$J^{(h)} = a \cdot J^{(ds=0)} + b \cdot J^{(ds=1)} + \text{higher order terms}$$

where $J^{(ds=0)}$ is the hadronic current with no strangeness changing, $J^{(ds=1)}$ is the hadronic current with transferring 1 unit of strangeness from reactants to products, and the corresponding Hamiltonian:

$$H_w = a^2 \cdot \{J^{(ds=0)}, J^{(ds=0)+}\}_+ + b^2 \cdot \{J^{(ds=1)}, J^{(ds=1)+}\}_+ + \ldots$$

Because nucleon-nucleon scattering (interaction) will not change the strangeness, all the mixing terms between the hadronic currents will not contribute to the PNC weak interactions Hamiltonian but will contribute to the hadronic decay. The main problem for the theoretical calculations on this potential is due to the lack of knowledge of the current. The most widely used current is based on the original ideal of Cabibbo[43] (Conventional model). In the conventional model, the relative contribution of strangeness changing current to strangeness non-changing current is expressed in terms of $\tan\theta$, with $\theta = 0.239$, where θ is the Cabibbo angle. The hadronic current is then given in terms of V-A form like the leptonic current.

$$J^{(h)} = \cos\theta \cdot J^{(ds=0)} + \sin\theta \cdot J^{(ds=1)}$$

$$J^{(ds=0)} = V^{(ds=0)} + A^{(ds=0)}$$

$$J^{(ds=1)} = V^{(ds=1)} + A^{(ds=1)}$$

where V,A are vector and axial vector currents and belong to the SU(3) octet. As we mentioned in the section on weak interactions the implication

of recently discovered neutral currents has not yet been explored by theoretical calculation. Besides this complication, additional difficulties arise from the inability to obtain precise estimates of many-body contributions. The reason why most PNC experiments undertaken so far are in the heavy nuclear region is that one hopes the richness of nuclear levels (states) in this region will offer some opportunities to observe a huge nuclear structure factor. The nuclear structure factor is defined as the ratio of irregular (parity violating) transitions to regular (parity conserving) transitions. It is known in this region that many regular transitions are hindered from the selection rule. One hopes that in these kinds of transitions the irregular transitions will not be hindered.

III. The Nuclear Structure Factor

The nuclear structure factor is important in today's PNC experiments. The smallness of the PNC force compared to the PC (parity conserving) strong force requires an accuracy of the measurement which is beyond present-day technology. Blin-Stoyle[3] and Michel based on a simple model (single particle) with charged currents estimated the amplitude of PNC to PC to be order of 10^{-7}. Taking this as an order of magnitude and disregarding the mechanism of PNC potential, one can describe the nuclear system as:

$$H = H^{\circ} + H_{W}$$

$$\psi = \psi^{\circ} + F \cdot \phi$$

where H° is the regular strong nucleon-nucleon Hamiltonian, H_w is PNC weak potential. Because H_w is much smaller than H°, one can use perturbation theory to estimate the effect. For the first order perturbation:

$$|\langle\psi_1|H|\psi_2\rangle|^2 = |\langle\psi_1{}^\circ|H^\circ|\psi_2{}^\circ\rangle|^2 + F \cdot \{|\langle\psi_1{}^\circ|H_w|\phi_2\rangle| \cdot |\langle\psi_2{}^\circ|H^\circ|\psi_1{}^\circ\rangle|$$

$$+ |\langle\phi_1|H_w|\psi_2{}^\circ\rangle| \cdot |\langle\psi_2{}^\circ|H^\circ|\psi_1{}^\circ\rangle|\} + \ldots$$

we have

$$\frac{|\text{irregular transition}|}{|\text{regular transition}|} = F \cdot \frac{|\langle\psi_1{}^\circ|H_w|\phi_2\rangle| + |\langle\phi_1|H_w|\psi_2{}^\circ\rangle|}{|\langle\psi_1{}^\circ|H^\circ|\psi_2{}^\circ\rangle|} = F \cdot R$$

Experimentally, one can obtain the quantities which are proportional to the product, $F \cdot R$. So if one can get a small denominator, i.e., for some mechanism in which the regular matrix element is expected to be small, but not reduce the numerator for this mechanism, then one gets a large R. This will enhance the sensitivity of the experiment by a factor of R. R can be as large as 10^5 or as small as 10.

IV. The Theory of Nuclear Polarization at Low Temperature

Because we are looking for parity violation, it is essential to polarize the nucleus, which will enable one to observe the asymmetry in angular distribution of the outgoing radiation. We use the terminology as given in Ref. 14. The method we use to polarize the nucleus is a combination of high magnetic field and ultra-low temperature to orient the nucleus through its nuclear dipole moment. The high magnetic field is provided by the magnetic hyperfine field from a ferromagnetic environment.

Due to core polarization and conduction electron polarization the non-ferromagnetic nucleus in ferromagnetic environment can see a hyperfine field up to hundreds of kilogauss. The low temperature is achieved by adiabetic demagnetization of a paramagnetic salt. In this experiment we use a chromium potassium sulfate-glycerin slurry which has a relatively large heat capacity at low temperatures. The system we have provides about 10 mK heat sink, starting from an initial magnetic field of 50 kilogauss and a temperature of 1 K.

The angular distribution of outgoing gamma radiation can be expressed in general as:

$$W(\theta) = \sum_K B_k \cdot G_k \cdot U_k \cdot A_k \cdot P_k(\cos\theta)$$

where B_k, the orientation parameter, is a function of temperature and of the orienting interaction, and tells you the population of m states. G_k is the solid angle correction which depends on the geometry of the source and crystal shape of the detector and the distance between them. It also depends weakly on the gamma energy. U_k is a reorientation parameter which indicates the loss of orientation before the gamma-ray of interest is emitted. $P_k(\cos\theta)$ is a Legendre polynomial, and θ is the angle between the incident radiation (the direction of the outgoing gamma-ray) and the polarization axis of the nucleus. A_k is the angular distribution parameter. It is usually expressed in terms of F_k coefficients which have been tabulated by Ferentz and Rosenzweig.[44] For k even

$$A_k = \frac{F_k(LLI_fI_i + 2 \cdot \delta \cdot F_k(LL'I_fI_i) + \delta^2 \cdot F_k(L'L'I_fI_i)}{1 + \delta^2}$$

$$\delta = \frac{\langle I_f \| L'\Pi' \| I_i \rangle}{\langle I_f \| L\ \Pi \| I_i \rangle}$$

For k odd

$$A_k = \frac{2 \cdot \varepsilon}{1 + \delta^2} \quad [F_k(LLI_fI_i) + \delta \cdot F_K(LL'I_fI_i)]$$

$$\varepsilon = \frac{\langle I_f \| \tilde{L}\ \Pi' \| I_i \rangle}{\langle I_f \| L\ \Pi \| I_i \rangle}$$

where the F_k are functions of the multipolarity L and the nuclear spin of the initial and the final states. L' denotes that there is a mixed transition. δ is the mixing ratio for this mixed transition. ε is the parity mixing ratio which we want to evaluate from our experimental results. $\tilde{L}$ means that this L angular momentum is carried by an irregular transition.

V. Results of Theoretical Computations

The comparison with the detailed mesonic contributions to the effect on PNC experiments[45,46] is omitted. It is author's opinion that the lack of understanding of the contribution from many-body effects and the implication of neutral currents makes the comparison too dubious. For this reason in this section only the asymmetry of the 501 keV and the anisotropy of 444 keV gamma transition of ^{180m}Hf at various temperatures are computed. The detailed data used from the literature and the results are listed in Appendix II.

The maximum k we used is 4; for the higher k's, B_k are small. The asymmetry, a, is defined as:

$$a = 2\,\frac{W(180°) - W(0°)}{W(180°) + W(0°)} = \frac{-2(G_1B_1A_1 + G_3B_3A_3)}{1 + G_2B_2A_2 + G_4B_4A_4} \quad \ldots.(1)$$

$U_1 = U_2 = U_3 = U_4 = 1$, for 501 keV

Figure 1 shows the results of this calculation: Asymmetry <u>vs</u>. ε at different temperatures.

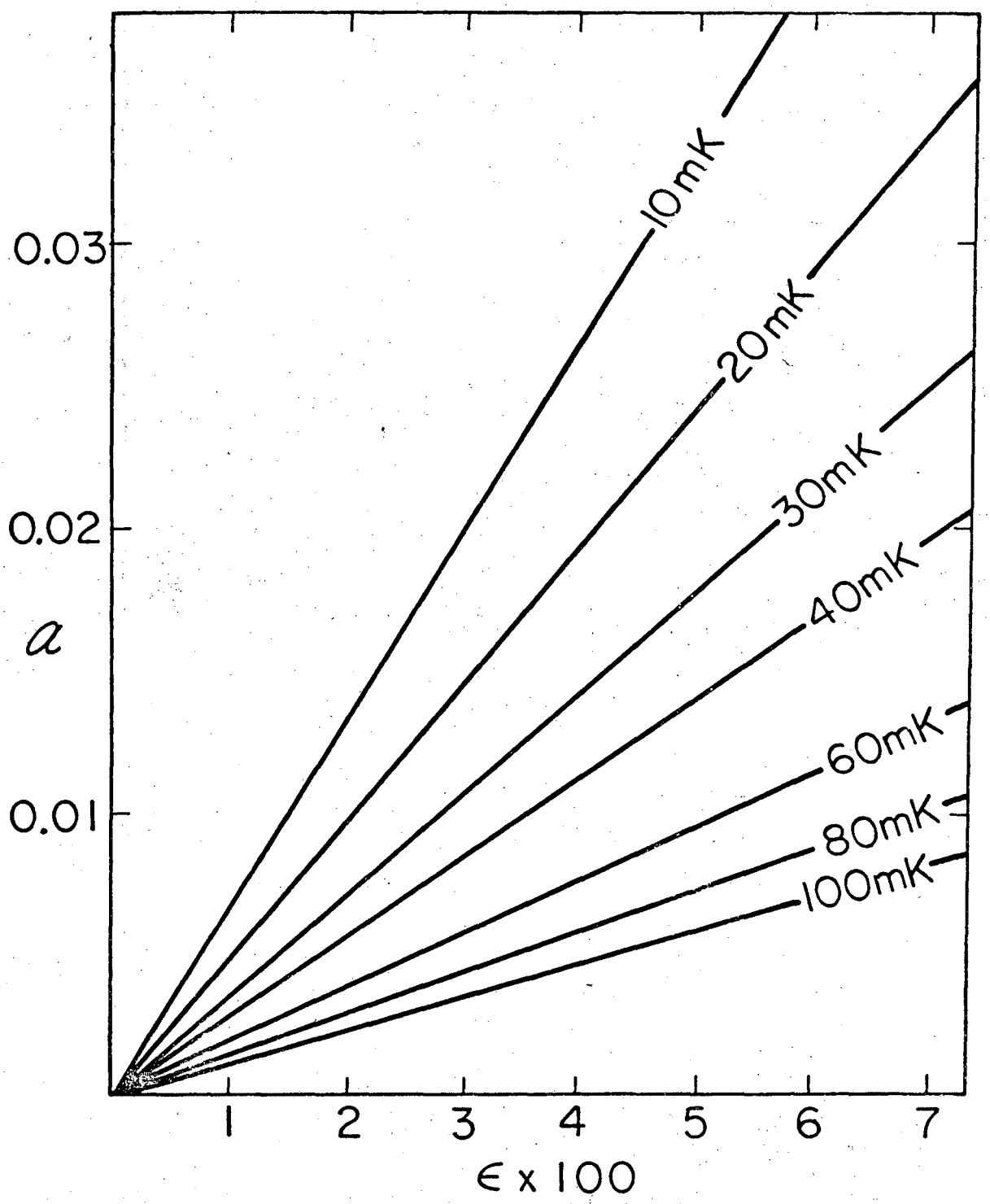

XBL741-2064

Fig. 1. Asymmetry of the 501 keV gamma-ray vs. parity mixing ratio at different temperature.

CHAPTER II

EXPERIMENTAL APPARATUS

I. Low Temperature Facilities

A. The Cryostat (Fig. 2)

The cryostat is a "can" with 4 inch O.D., 12 inches long with 35 mil (one thousandth of inch) wall which is attached to a 1 1/2 inch O.D. pumping line at the upper end and to a 1/2 inch O.D. tube (10 mil wall) which is 7 inches long at the lower end. All the joints are either Heliarc welded or sealed by indium "O" rings.

B. The Magnets

1. The cooling magnet. The coil constant of the cooling magnet is 499 Gauss/Amp. Its critical current at 4.2 K is about 142 amperes. The length of the magnet is 12 inches. A detailed description of the magnet is in Sammy Hung's thesis.[47]

2. The polarizing magnet (Fig. 3). The polarizing magnet consists of two pairs of perpendicularly oriented superconducing Helmholtz coils. The 45 mils O.D. Nb-Ti superconducting wire is wound on the fiberglass coil form, which is designed to fit into the 1 K° bath. The outer coil has 1044 turns with 29 layers and a coil constant of 225 gauss/amp. The inner coil has 1428 turns with 17 layers and a coil constant of 233 gauss/amp.

3. The polarizing magnet holder (Figs. 2 and 3). The holder is designed to prevent the magnet from moving during the experiment. It consists of one fixed plate with 4 holes at the bottom of a cylinder and a moving plate which can be tightened to the bottom of the "can" by four bolts. Four rods coming from the polarizing magnet go into the four holes

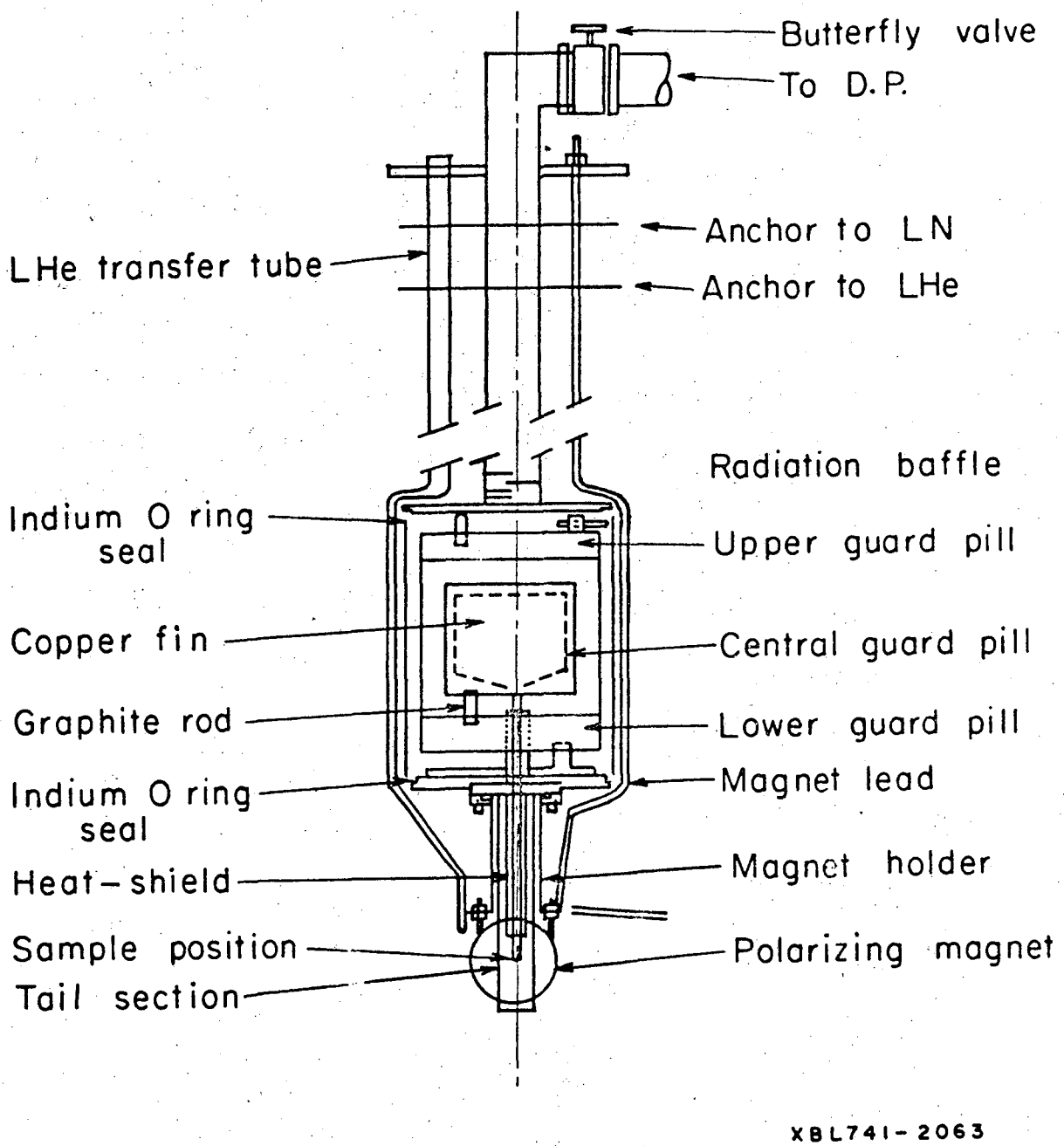

Fig. 2. Cryostat with polarizing magnet.

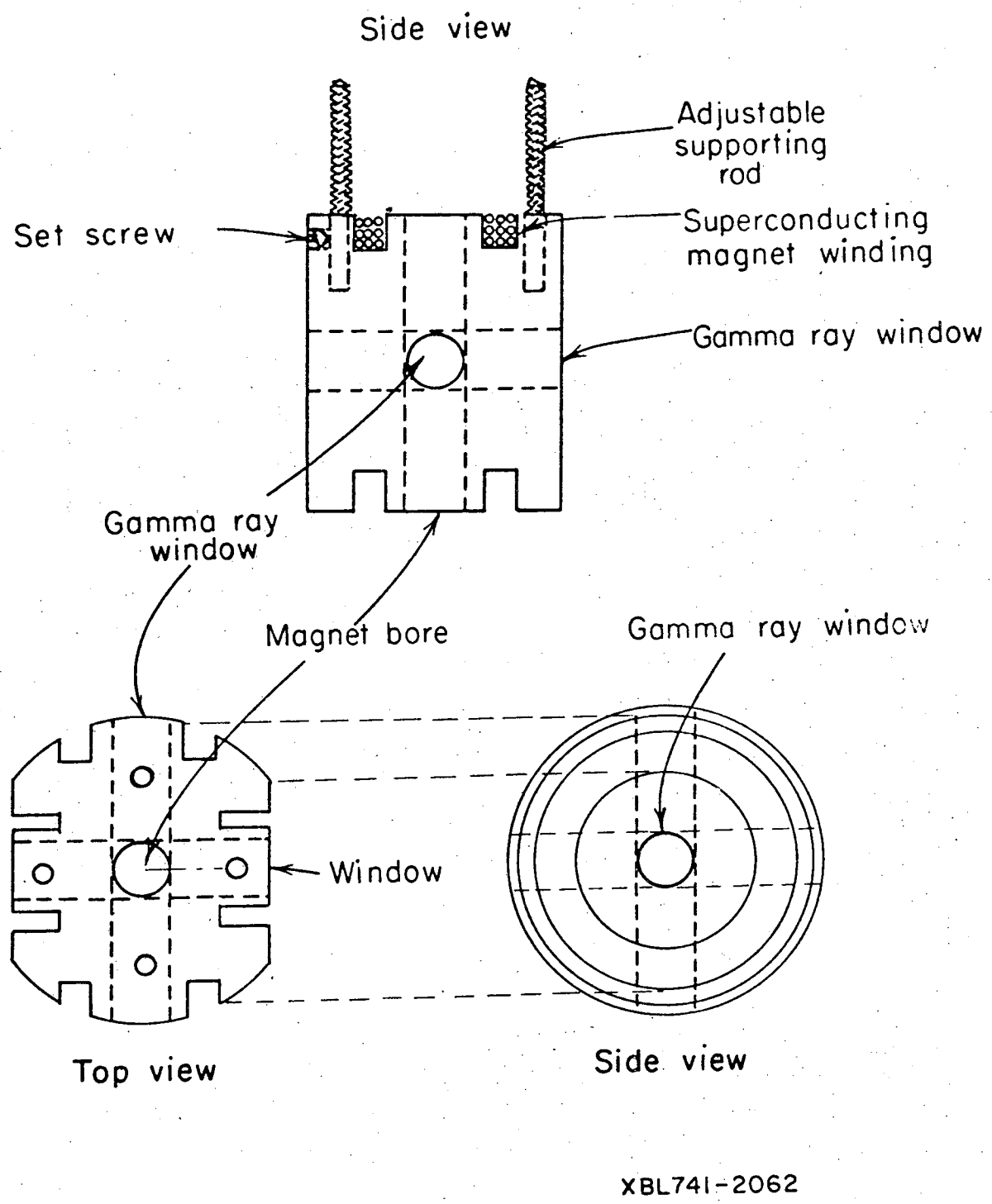

Fig. 3. Detail of polarizing magnet.

of the fixed plate. The height of the magnet can be adjusted through positioning the nuts which sit one below and one above the plate for each rod.

C. The Control Units and Power Supply for Magnets

All the power supplies are A.C. rectified D.C. current supplies. The cooling magnet power supply is capable of giving 400 amperes (LBL 13X 1420-S1 to 13X 1420-S3) and is controlled by an A.C. motor with gear box reduction. The control units for the polarizing magnet are illustrated schematically in Fig. 4. The ramp generator produces a linear ramp and can produce both positive and negative polarities of 12 volts. The amplifier has a sensitivity of 3 amperes/volt. Two outputs from the amplifier can be controlled either to be 90 degrees out of phase or 180 degrees out of phase by the ramp generator. The magnetic field from the polarizing magnet can be rotated through every 90 degrees or 180 degrees.

D. The Salt Pill (Fig. 5)

The salt pill configuration is shown in Fig. 5. Two guard pills are used. One sits above the central pill which serves as the cooling reservoir. This upper guard pill has a pump-out line coming from the bottom of it and going out from its sides. The can of the central pill is made out of mylar. The heat shield from the upper guard pill to the top of the lower guard pill is made out of copper foil overlapped with a mylar strip to lessen the eddy current heating. The lower guard pill sits on the fiberglass plate through 3 graphite rods, which serve as thermal insulators. The heat shield from lower guard pill is extended all the way down to about one inch above the sample location. The central pill, the

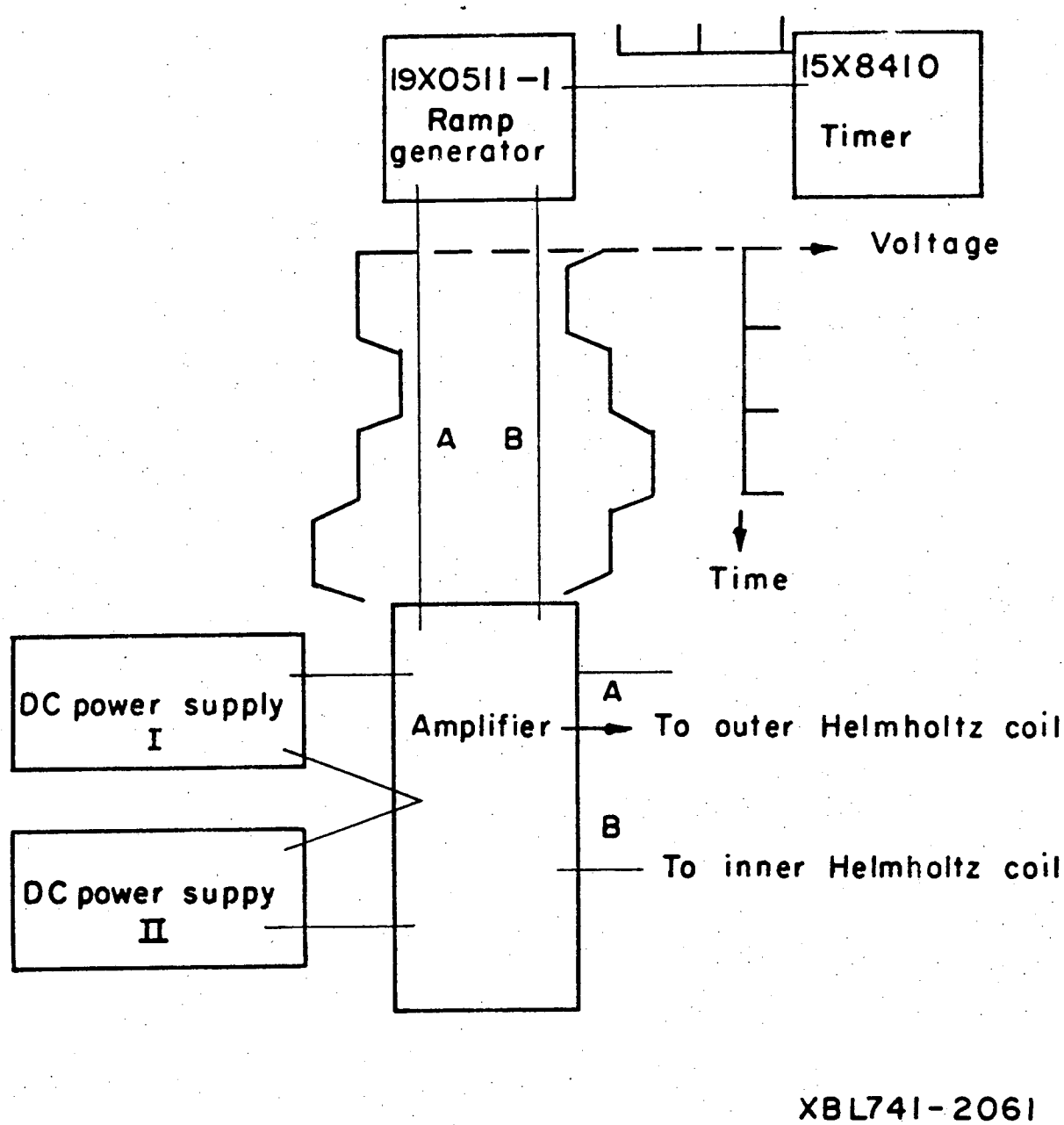

Fig. 4. Schematic of power supply with control unit for polarizing magnet.

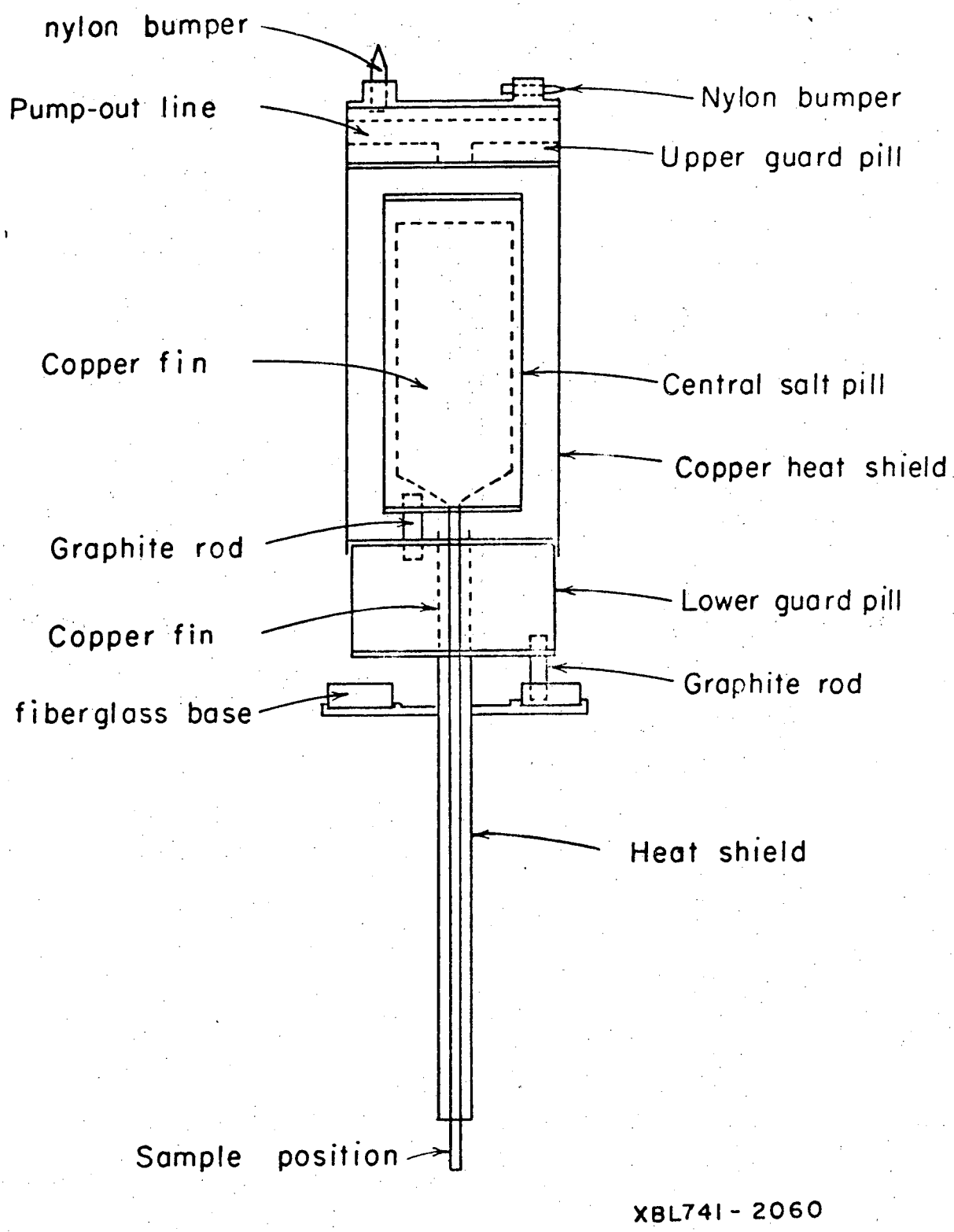

Fig. 5. Salt pill assembly.

heart of the cooling apparatus, is protected by both upper and lower guard pills and their heat shields. The copper fin in the central pill consists of 16 sheets of five mil copper foil.

II. Sample Preparation

$Hf_{0.1}Zr_{0.9}Fe_2$ is a very brittle and hard alloy. It is prepared in an arc furnace in an argon atmosphere. The starting materials used in preparing this compound are obtained from the following sources:

Iron (Fe) 99.99%

Alfa Inorganics, Ventron

Beverly, Massachusetts

Zirconium (Zr) 99.99%

For the particular way in which we prepare the sample, one must use the highest purity Zirconium available. Random pieces are alright. The high purity rod did not prove to be good.

Research Organic/Inorganic Chemical Corp.

11686 Sheldon St., Sun Valley, Calif. 91352

Hafnium (Hf) Enriched Isotope 86.98% ^{179}Hf

Oak Ridge National Laboratory

Oak Ridge, Tennessee 37830

All the starting materials, except enriched ^{179}Hf, are melted into an ingot first. Stoichiometric ratios of Zr and Fe of $ZrFe_2$ are put together in the arc furnace and melted at the lowest current setting. After it melts together the arc current is increased and held at this higher setting for at least 5 minutes until it is thoroughly mixed. The resulting ingot is turned over and remelted several times to insure that the compound

is homogeneous. All the ingots coming out of the arc furnace are chemically etched. The $Hf_{0.1}Zr_{0.9}Fe_2$ compound is melted in the stoichiometric ratio of 0.1 Hf, 0.1 Fe, and 0.9 $ZrFe_2$. The first arc strikes on these materials are very critical. It must be a low arc current and a slow approach. Because $ZrFe_2$ is brittle, too much thermal strain on it will tear it apart. The resulting ingot is turned over and remelted several times. Part of the ingot is crushed into powder and analyzed by the x-ray powder diffraction technique. The sensitivity of x-rays insures there is at most 10% of any other phase which might be coexistent. The rest of the compound is spark-cut into thin disks. The resulting disks are mechanically polished down to 25-34 mils thickness, with a metallic shining surface. The O.D. of the disks range from 275 to 195 mils.

Three different methods of sample preparation are employed. The first method checks for the influence of imperfection of the crystal. The compound after arc furnace melting is subjected to at least 12 hours of low temperature annealing. The annealing temperature is about 750°C. The second method of sample preparation checks for the radiation damage from thermal neutron capture. The reaction ^{179}Hf (neutron, gamma) ^{180m}Hf, will release an energy of about 7 MeV. In order to avoid the direct consequence of this energy, one prepares the sample after one obtains the activity. The third method, of course, is the simplest one. One prepares the compound by using stable isotopes, then one spark-cuts the sample into a thin disk and polishes its surface. The resulting disk is then sealed into quartz tubing in an Ar atmosphere and is ready for neutron radiation. Within the experimental error we can not find any different results by these three different ways of sample preparation.

III. Detectors and Data Acquisition System

Either two detectors at 180° to each other or four detectors at 90° apart are used to collect the data. The pulse comes out from the detector "front-end" and is amplified in the Preamp (11X, 5561-P1), and then goes to the high-rate linear amplifier (11X, 5501-P1) which is pole zero compensated. The slow pulse from the high-rate linear amplifier (HRLA) is used for energy discrimination, while the fast pulse from HRLA is used for pile-up rejection. The pile-up rejector (11X, 5551-P1) rejects the pile-up events and slow rise pulses which occur when gamma rays of interest are absorbed outside the active volume resulting in partial charge collection. The energy discrimination is done by single channel analyzers (SCA, 11X, 5510-P1), which need a strobe pulse; we use the fast pulse coming out from the pile-up rejector. After the energy discrimination and pile-up rejection, the resulting pulse are fed into a router (11X, 7370-P1), which separates the individual pulses of different detectors or different energy regions in time. This resulting pulse then feeds into an analog to digital convertor (ADC, 11X, 4680) and is processed by a small computer, PDP-7. The block diagram of the two detector and four detector systems are illustrated in Fig. 6 and Fig. 7.

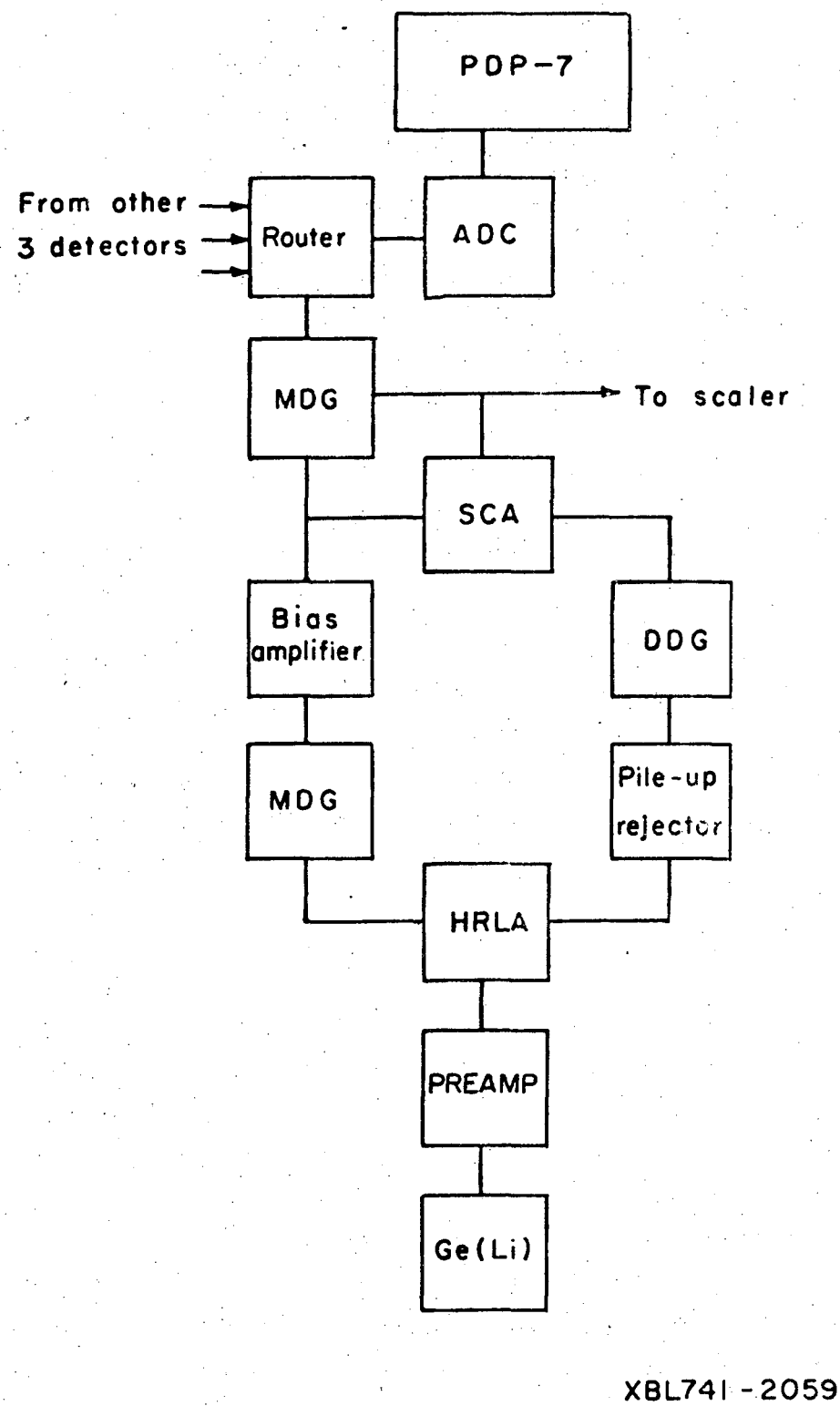

Fig. 6. Electronic block diagram for four detector system.

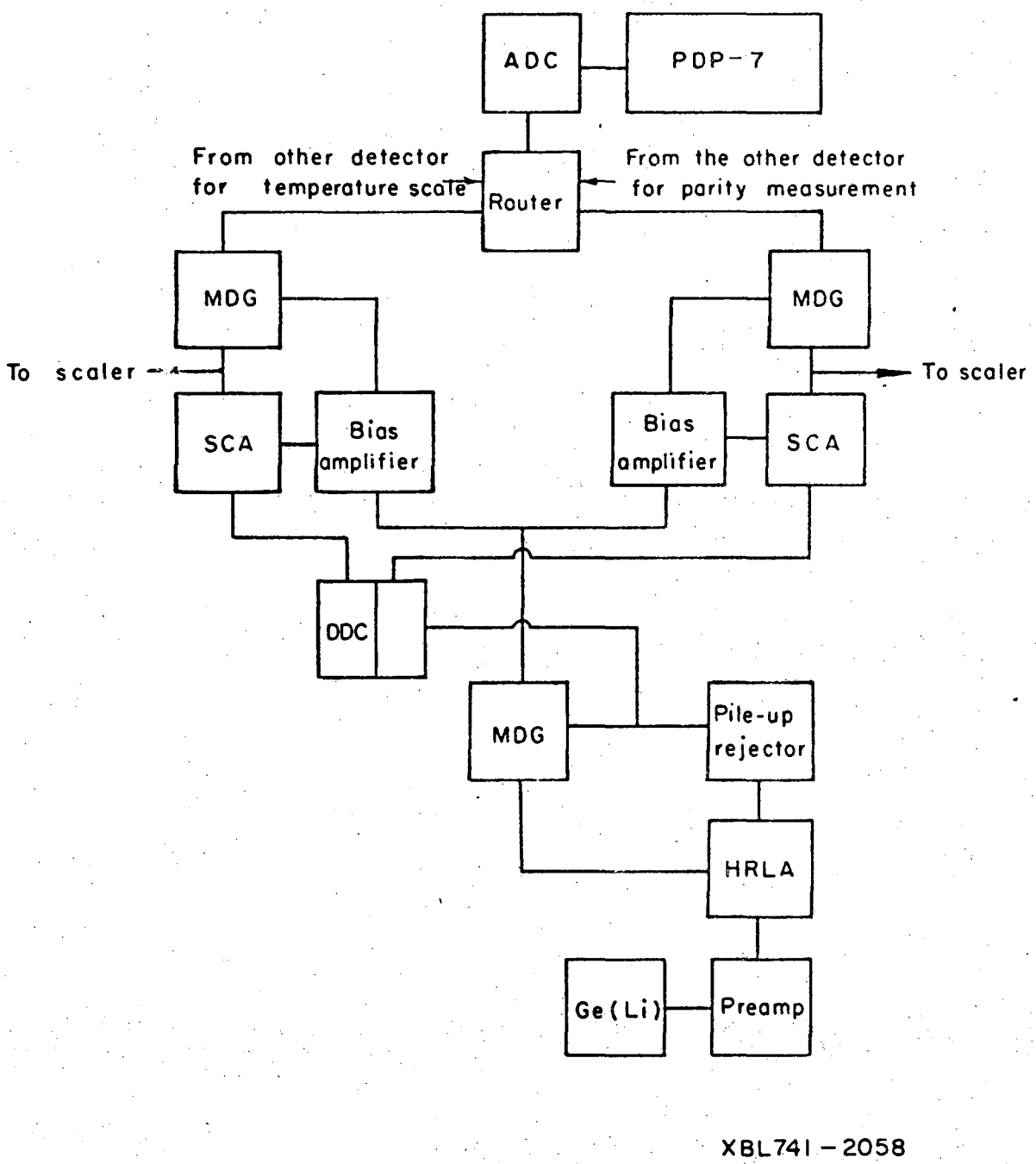

Fig. 7. Electronic block diagram for two detector system.

CHAPTER III

EXPERIMENTAL BACKGROUND

In order to be able to do the low temperature PNC parity experiment, some basic physical knowledge about the system of investigation must be known. These basic physical quantities are the nuclear magnetic moment of the state which is going to be oriented, the hyperfine field which the nucleus sees, the temperature that the sample will have after adiabatic demagnetization and the spin and parity of the states from which one observes the gamma radiation. The following sections list these basic quantities with some comments.

I. Nuclear Structure of ^{180m}Hf

The ^{180}Hf nucleus has 72 protons and 108 neutrons. It is a deformed nucleus. The 8- isomeric state belongs to a K = 8 rotational band. The nuclear magnetic moment of the 8- state can be estimated roughly from the systematic study on its neighboring nuclei. The author appreciates the private communication with Dr. E. A. Philip for revealing this fact. Figure 8 shows the systematic study of 106 neutrons and 72 protons in the neighborhood of ^{180m}Hf.[48,49] From this study it is clear that the 8- state of ^{180}Hf is mostly a two proton state. The contribution from a pure two proton state or two neutron state can be evaluated from its neighboring nuclei. We can compute the nuclear magnetic moment of the two neutron state from the ^{177}Hf ground state (g.s.) I = 7/2, 7/2-(514), and the ^{179}Hf(g.s.) I = 9/2, 9/2+(624).[50] Here 7/2 and 9/2 are nuclear spins; the sign after these values are parity values of the states and ( ) are Nilsson quantum numbers. The magnetic moment for these states are 0.61 nuclear magneton

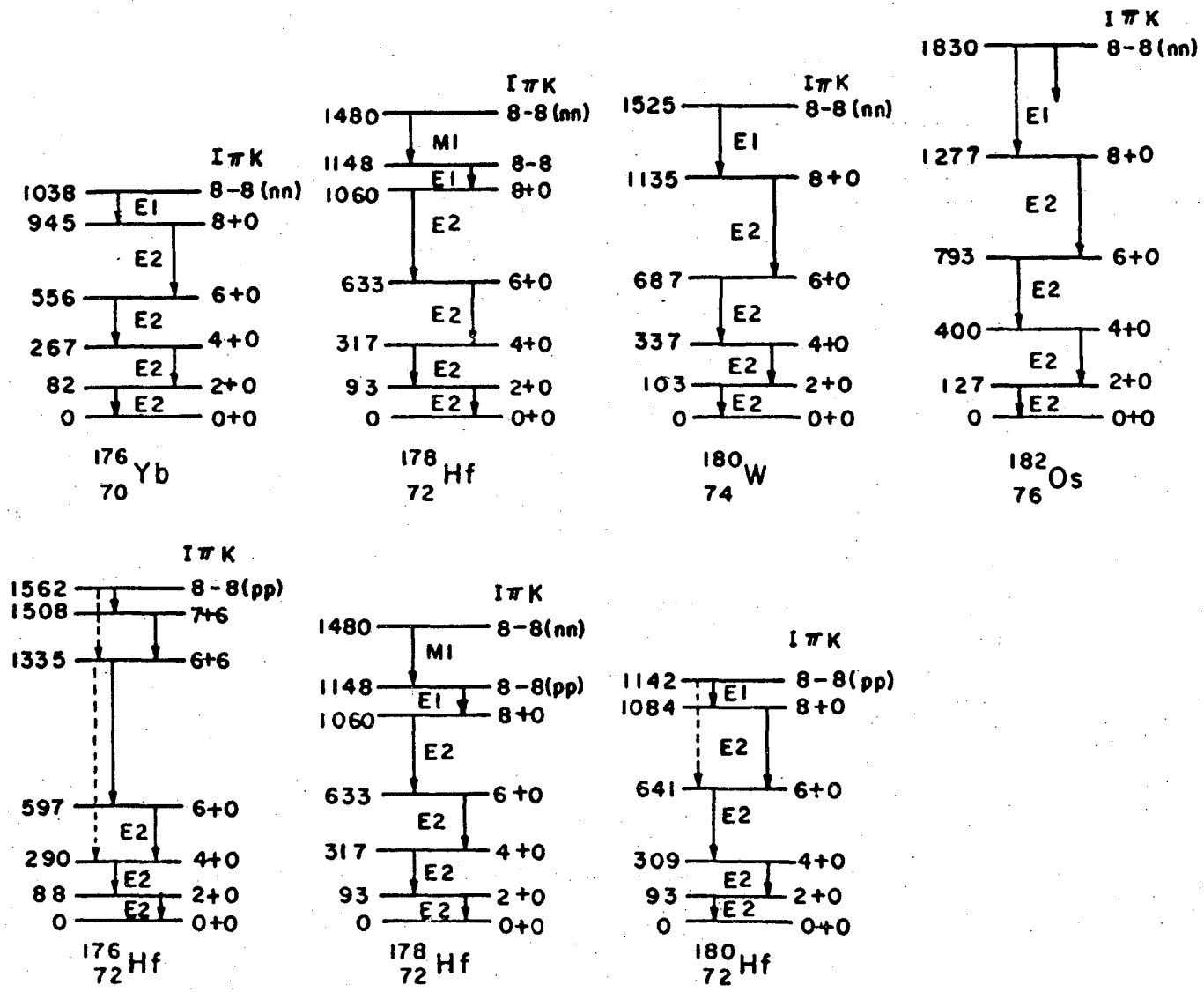

Fig. 8. Energy levels scheme for 106 neutrons and 72 protons nuclei in the neighborhood of $^{180}_{72}Hf$.

(n.m.) for 7/2-(514) state, and -0.47 n.m. for the 9/2+(624).[51] From these we estimate the contribution from a two neutron state to be less than 0.1 n.m. We can compute the nuclear magnetic moment of the two proton state from ^{181}Ta(g.s.) and 6.3 keV state as 7/2+(404), and 9/2-(514), respectively. The magnetic moments are 2.35 n.m. for the 7/2+(404) state and 5.29 n.m. for the 9/2-(514).[52,53] From the systematic study we choose the magnetic moment of ^{180m}Hf as 8.2 n.m. Our estimate is actually confirmed by the later experiment of Körner et al.,[54] From their Mössbauer spectrum of the 2+ ground state of the rotational band, whose gyromagnetic ratio is known from angular correlation results,[55] they deduced the hyperfine field of Hf in $Hf_{0.1}Zr_{0.9}Fe_2$ to be -200±20KG. Using the results from Krane et al.,[33] the magnetic hyperfine splitting, they confirm the nuclear magnetic moment of the 8- state as 8.6 n.m. and conclude that it is a very pure two proton state. More detail is listed in Appendix IV.

II. Magnetic Hyperfine Splitting of Hf in $ZrFe_2$

The hyperfine field of Hf in $ZrFe_2$ at two different concentrations are reported by Mössbauer effect.

Concentration	Transition	Gyromagnetic ratio	H in KG	Temperature
$Hf_{0.5}Zr_{0.5}Fe_2$	2+ → 0+	0.31	220	R.T.
$Hf_{0.1}Zr_{0.9}Fe_2$	2+ → 0+	0.263	200±20	4.2°K

Considering the possibility of structure variation due to high concentrations of $Hf_{0.5}Zr_{0.5}Fe_2$, 20% hyperfine field variation on top of 10% experimental accuracy might be expected. So at least one can say the temperature dependence of the hyperfine field of Hf in $ZrFe_2$ from room temperature to low temperatures is not large. From the general behavior of magnetization

of ferromagnetic material with respect to temperature, it is very reasonable to expect this result. The Curie point of pure $ZrFe_2$ is 364°C. The value of the magnetic hyperfine splitting of 7.9 mK is adopted to compare our experimental results.

III. Thermometry

The temperature of the sample is determined by ^{60}Co thermometry and/or internal thermometry of the 444 keV gamma radiation from ^{180m}Hf.

A. ^{60}Co Thermometry

1. Sample preparation. ^{60}Co in 1N HCl solution was introduced into a 99.99% pure iron foil. The foil was dried on a hot plate under a nitrogen gas stream. The resulting ingot was pressed into a thin disk, then annealed and repressed into a thinner disk, then rolled into a thin foil. The resulting foil was annealed under a hydrogen gas stream at 750°C for 12 hours.

2. Nuclear data of ^{60}Co. The nuclear magnetic moment of the 5+(g.s.) of ^{60}Co is 3.754 n.m. Its decay scheme is shown in Fig. 9. Its major decay mode (99%) is 5+(beta)4+. Sammy Hung[47] reinvestigated the asymmetry of this decay and confirmed that it is a pure Gamow-Teller transition within his experimental error.

3. Angular distribution function of ^{60}Co. The angular distribution of the 1.17 MeV and 1.33 MeV gamma transition in the decay of ^{60}Co are the same. Both are pure E2 and can be described as:

$$W(\theta) = 1 - 0.42056G_2B_2P_2(\cos\theta) - 0.24280G_4B_4P_4(\cos\theta)$$

where G_k and B_k are solid angle corrections and orientation parameters, respectively.

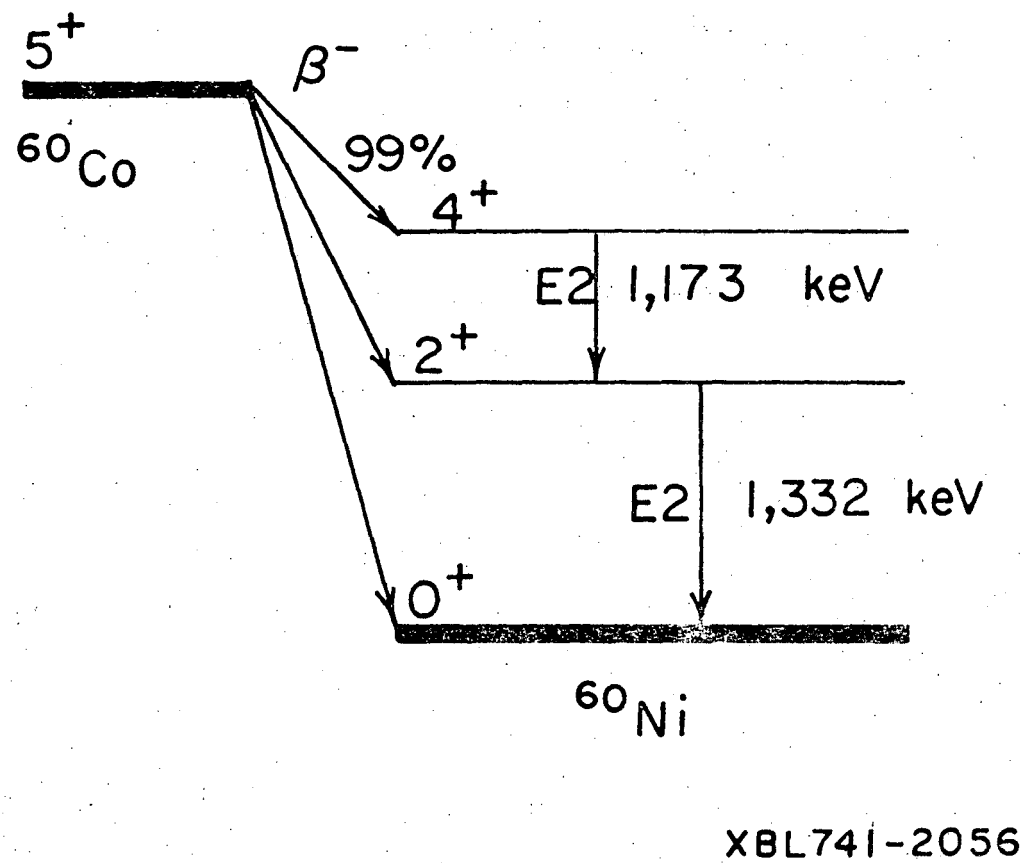

Fig. 9. Partial decay scheme of ^{60}Co.

4. Hyperfine field of Co in iron. The hyperfine field of ^{60}Co in Fe is -287.7 KG.[24] This value is confirmed by John A. Barclay.[57] He used NMRON on ^{60}Co in an iron single crystal. The single crystal was used due to inhomogeneous broadening considerations. The result of calculations on the angular distribution function at 0° and 90° from 10 mK to 100 mK is listed in Appendix III.

B. 444 keV Internal Thermometry

The U_k coefficients are evaluated under the assumption that the 8- isomeric state to 8+, 57 keV transition, is pure E1. The degree of mixing from the other multipolarities was investigated by Krane *et al.*[58] They found that the mixing ratios are small. Their results are: (M2/E1) = -0.009±0.07, (E3/E1) = -0.013±0.02. The angular distribution function will be described as:

$$W(\theta) = 1 - 0.3654G_2B_2P_2(\cos\theta) - 0.1487G_4B_4P_4(\cos\theta)$$

The result of calculations with this angular distribution function is listed in Appendix II.

CHAPTER IV

RESULTS AND DISCUSSION

I. Results

A. Homogeneity of the Sample

Failure to obtain via nuclear orientation the big net hyperfine field previously found for Hf in an iron[59,60] lattice when using 0.1-0.01 atomic percent of Hf in iron has forced the author to examine the homogeneity of the sample, $Hf_{0.1}Zr_{0.9}Fe_2$. The possibility of mixing some other phase like $ZrFe_3$, Zr_2Fe in the $ZrFe_2$ lattice was investigated by x-ray powder diffraction. A typical x-ray spectrum is shown in Fig. 10. In this study the CuKα x-ray was used. The angles range from 15° to 30° or from 3.01 A to 1.50 A, respectively. X-ray data of these intermediate phases are listed in Table I, where s,w,m mean strong, weak, and medium and vw,mw,ms mean very weak, medium weak, and medium strong, respectively. The signal to noise ratio from Fig. 10 ensures that other phases can not exist as more than 10% of the total sample, and shows the major phase is $ZrFe_2$ in the face center cubic (F.C.C.) structure. The results of Hf in iron (Hf(Fe)) are not presented in this thesis. The smallness of the anisotropy of our experiment from the 444 keV gamma transition indicates that it is hopeless to do parity experiments on the Hf(Fe), in the way we prepared it. Further investigation on this system might be undertaken in this laboratory by ^{180m}Hf ion implantation into a thin disk of an iron single crystal. The dosage and incident beam energy should be varied to optimize the results. General remarks on the ion implantation technique can be found in Deutch's[63] review article.

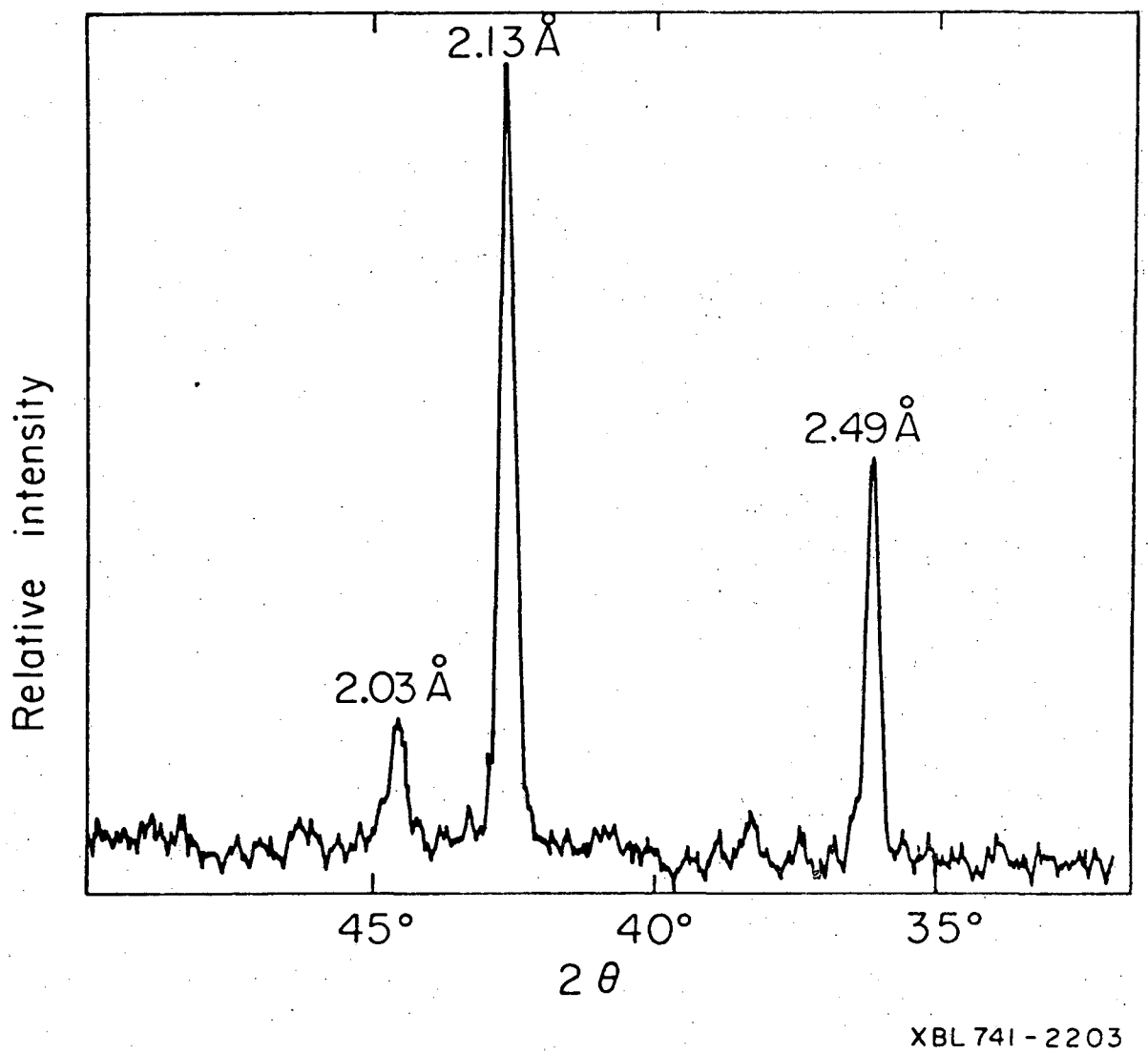

Fig. 10. The x-ray powder spectrum of $Hf_{0.1}Zr_{0.9}Fe_2$.

Table I. d-Spacings and Intensities

Zr_2Fe[61]		$ZrFe_2$[61]		$ZrFe_3$[62]	
d	I	d	I	d	I
2.80	m	2.49	43	2.936	5
2.75	w	2.13	100	2.681	20
2.63	mw	2.03	30	2.384	50
2.58	ms	1.62	w	2.249	100
2.55	w	1.44	22	2.070	100
2.50	ms	1.36	30	1.977	20
2.47	w	1.25	30	1.951	20
2.38	ms	1.25	30	1.853	5
2.35	s	1.19	w	1.786	10
2.21	w	1.12	27	1.766	10
2.16	ms			1.635	20
2.09	vw			1.620	20
1.69	w			1.521	20
1.66	w			1.427	50
1.44	w			1.376	100
1.40	w			1.350	80
				1.284	50
				1.275	50
				1.225	20
				1.193	80
				1.175	100

B. Activity

The sample weight ranged from 38 mg to 200 mg; using various neutron irradiation times the approximate resultant activity was 20 microcuries from ^{180m}Hf. The relative activity of ^{180m}Hf and ^{181}Hf from either natural hafnium or enriched 86.98% ^{179}Hf is compared in Fig. 11 and Fig. 12. The advantage of using enriched isotopes is profound as shown in Fig. 11, especially for long irradiation times. The difference in the activity ratio (^{180m}Hf vs. ^{181}Hf) is very critical in impurity studies as in our case of Hf(Fe) which needed a long irradiation time to obtain enough activity. Table II lists the count rate of 444 keV gamma transition at the beginning of and at the end of some experiments.

C. Linearity of Spectra

The linear relationship in energy versus channel number held both at low and high count rates. By low count rate we mean count rates about 200 cts/sec(0.2KC), and high count rates, 2000 cts/sec(2KC); both refer to the 444 keV peak at the analyzer. But this is no longer true in efficiency versus count rate. The efficiency is decreased as the count rate is increased. Taking the spectra of ^{180m}Hf at room temperature in the same source-detector geometry as the real parity experiment for enough time to cover the whole range of counting situations reveals this fact. The effect of this "electronic blockage" is clearly shown in Fig. 13 and Fig. 14 for Det. 1 and Det. 2, respectively. The solid line in both figures are theoretical lines which are an extrapolation from the last six low count rate experimental points. The half life of 5.5 hours and good behavior of the detectors at low count rates are assumed.

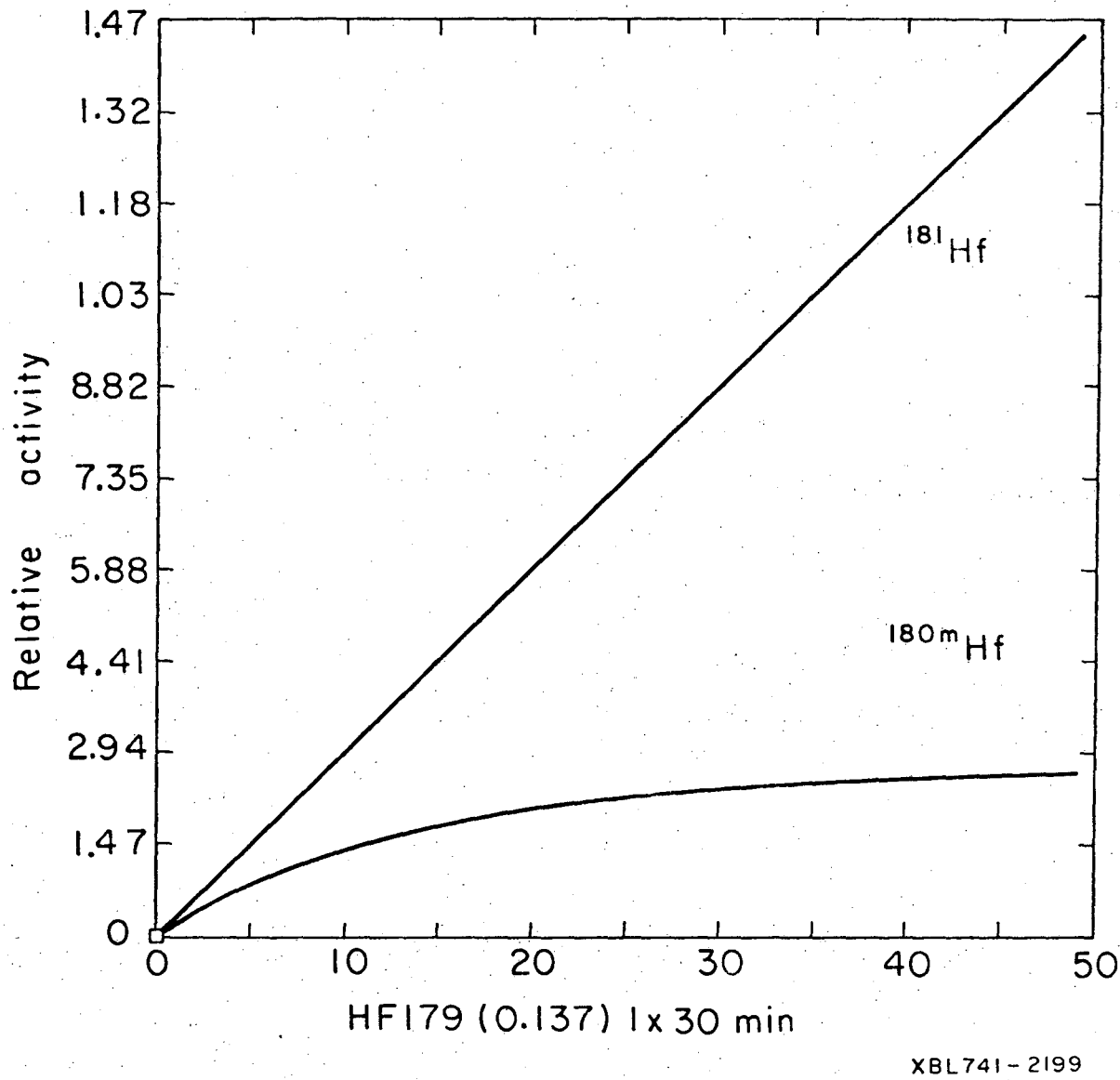

Fig. 11. Relative activity of ^{181}Hf to ^{180m}Hf from natural hafnium by neutrons capture at various radiation times.

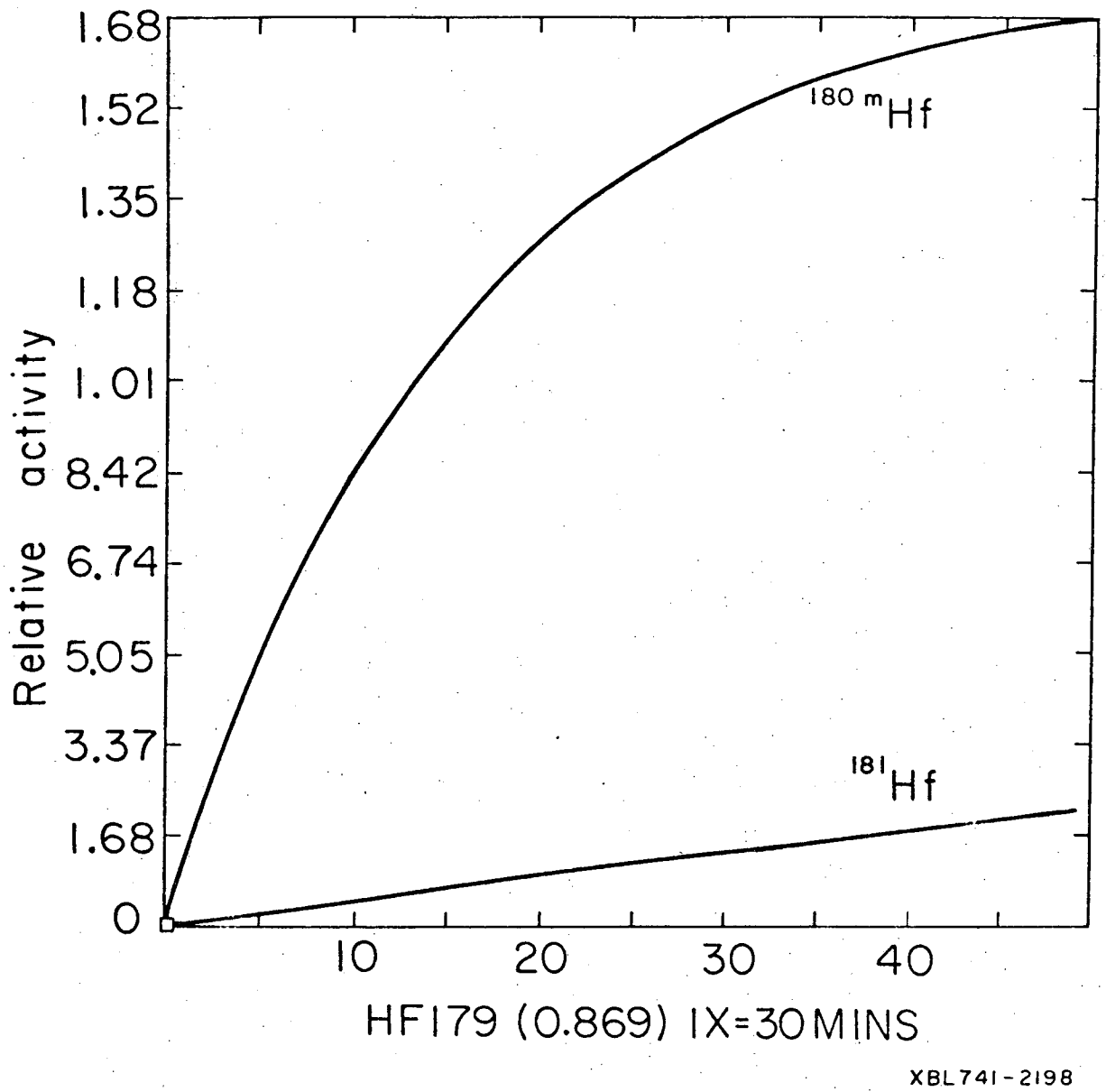

Fig. 12. Relative activity of ^{181}Hf to ^{180m}Hf from enriched hafnium (86.98% ^{179}Hf) by neutrons capture at various radiation times.

Table II. Orientation and Counting Rate of Detectors

Date	Det. No.	Distance (cm)	At the Beginning Orientation	At the Beginning cts/12 mins	At the End cts/12 mins
	1	21.6	270	3.5×10^5	8.1×10^4
	2	20.1	0	1.7	6.3
6/4/73					
	3	10.2	90	2.8	7.3
	4	11.4	180	1.8	7.8
	1	19.7	90	4.6×10^4	7.1×10^3
	2	5.1	180	4.7	1.3×10^4
6/5/73					
	3	9.7	0	4.1	2.4×10^3
	4	10.8	270	3.8	5.5
	1	29.5	180	1.4×10^5	6.4×10^4
	2	10.8	270	3.5	1.2×10^5
6/20/73					
	3	11.5	90	3.1	1.2
	4	13.4	0	1.4	7.6×10^4
	1	27.1	270	2.9×10^5	6.4×10^4
	2	9.6	180	2.8	1.1×10^5
6/29/73					
	3	11.9	0	2.6	1.1
	4	13.5	90	3.3	6.0×10^4
	1	17.1	270	1.8×10^5	1.7×10^4
10/2/73					
	2	9.1	90	8.9×10^4	7.3×10^3

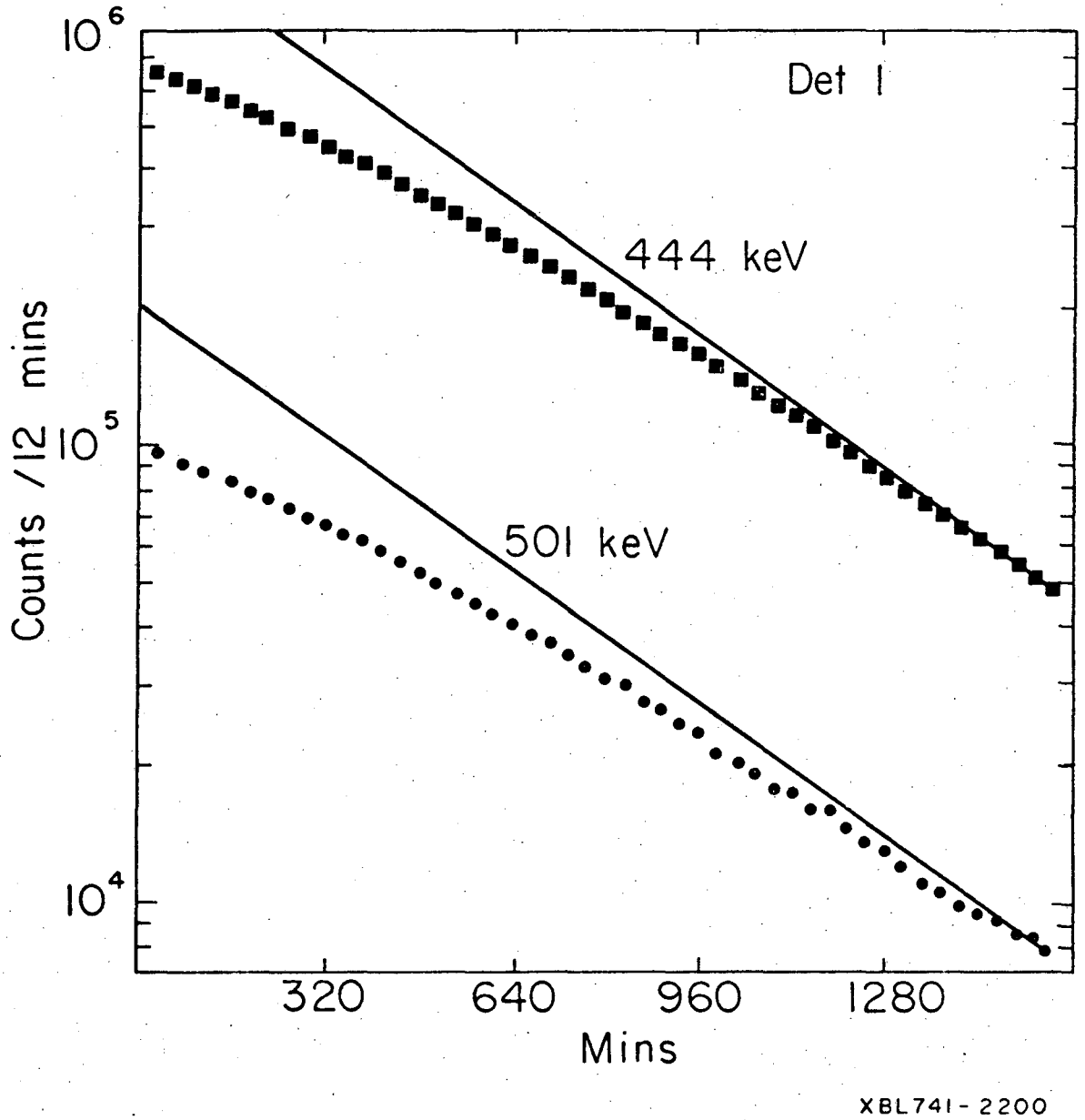

Fig. 13. The electronic blockage of detector 1
The solid line is normal behavior decay curve based on the low counting region, while the points are experimental data.

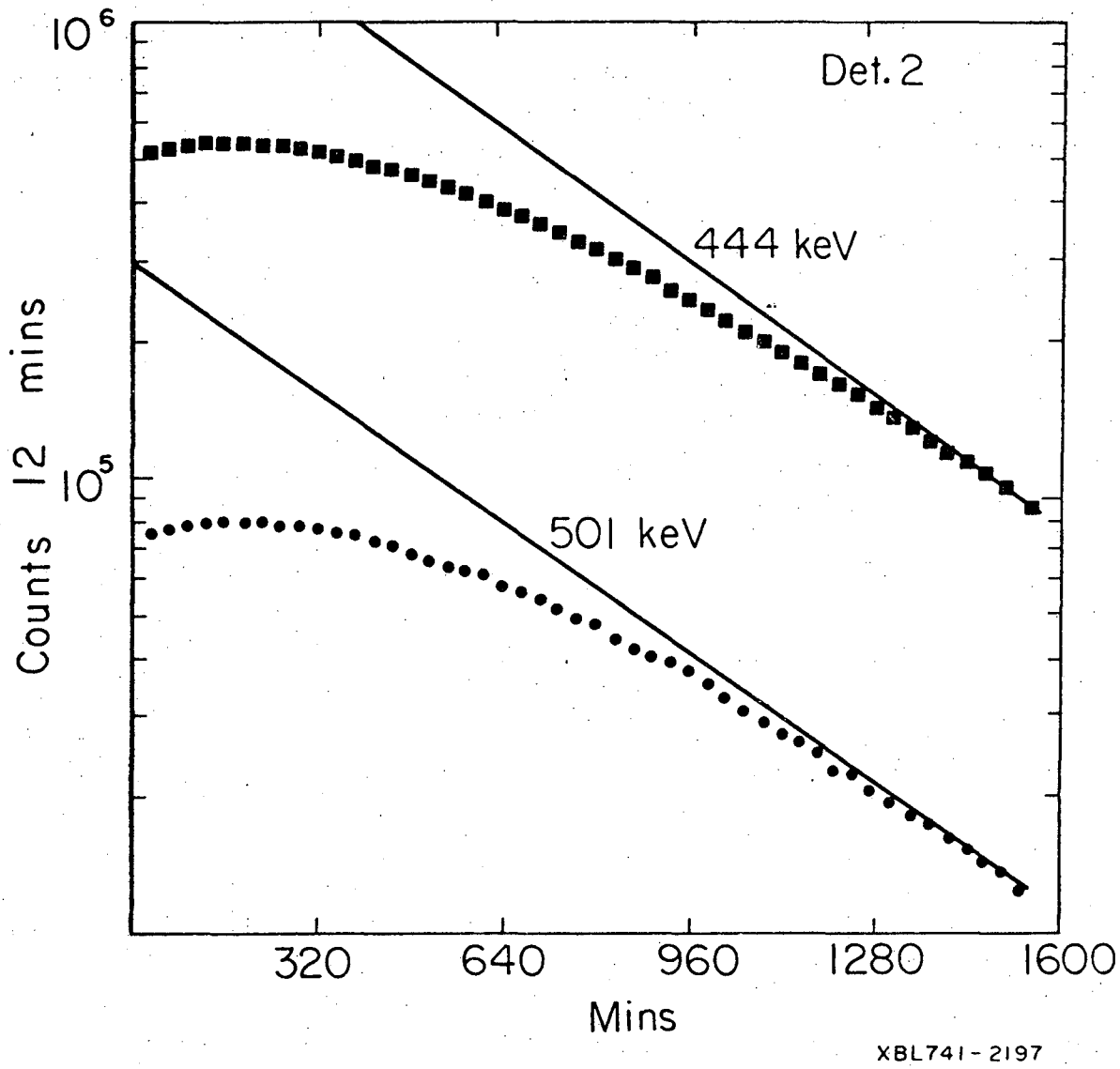

Fig. 14. The electronic blockage of detector 2.

Det. 1 is a high resolution and high efficiency detector, while Det. 2 is a high resolution and medium efficiency detector. Although both have 40 cc of active volume, today's detector technology is still not able to reproduce the exact quality. The fact that saturation occurs at 0.7 KC in Det. 2 while Det. 1 still behaves fine indicates that this anomalous behavior is a detector dependent phenomenon. For this reason the independent correction factors are applied for each detector in the data analysis. The correction factors are listed in Table III.

D. Background Subtraction

Linear background subtraction is used throughout the whole data analysis. The general procedure is as follows:

1) Select two markers in front of the peak which is under integration as marker 1 and marker 2.
2) Select another two markers on the other side of the peak as marker 5 and marker 6.
3) Select two markers on either side of the photopeak's base line. The low-energy marker is chosen low enough in energy to allow the broadening of the peak due to pile-up events and slow rising pulses at high counting rate.

The spectra at the beginning of the experiment and at the end of the experiment are shown in Fig. 15 and Fig. 16, respectively. The broadening of the 444 keV photopeak is clearly shown by comparing these two figures in the low energy end. Figure 17 illustrates the above mentioned background subtraction. Only the backgrounds of the 444 keV and the 501 keV peaks are shown for clarity. Where

Table III. The Correction Factor for Each Detector

	Uncorrected Counts/12 mins	Factor	Uncorrected Counts/12 mins	Factor	Uncorrected Counts/12 mins	Factor	Uncorrected Counts/12 mins	Factor
444 kev	500000.00	1.518	400000.00	1.830	370000.00	2.50	350000.00	2.17
	450000.00	1.448	350000.00	1.600	360000.00	2.30	340000.00	2.04
	400000.00	1.372	300000.00	1.443	350000.00	2.17	300000.00	1.72
	300000.00	1.281	200000.00	1.243	340000.00	2.04	250000.00	1.47
	200000.00	1.190	100000.00	1.108	300000.00	1.72	200000.00	1.34
	100000.00	1.095	90000.00	1.096	250000.00	1.47	150000.00	1.24
	90000.00	1.090	80000.00	1.085	200000.00	1.34	100000.00	1.16
	80000.00	1.084	70000.00	1.071	150000.00	1.24	90000.00	1.14
	70000.00	1.074	60000.00	1.060	100000.00	1.16	80000.00	1.12
	60000.00	1.064	50000.00	1.049	90000.00	1.14	70000.00	1.10
	50000.00	1.058	40000.00	1.035	80000.00	1.12	60000.00	1.08
	40000.00	1.045	30000.00	1.025	70000.00	1.10	50000.00	1.075
501 kev	60000.00	1.43	50000.00	1.50	45000.00	1.880	38000.00	1.58
	50000.00	1.336	45000.00	1.405	40000.00	1.670	35000.00	1.47
	40000.00	1.273	40000.00	1.333	38000.00	1.580	30000.00	1.325
	30000.00	1.205	30000.00	1.238	35000.00	1.470	28000.00	1.300
	20000.00	1.138	20000.00	1.150	30000.00	1.325	25000.00	1.250
	10000.00	1.075	10000.00	1.095	28000.00	1.300	20000.00	1.208
	9000.00	1.069	9000.00	1.089	25000.00	1.250	15000.00	1.140
	8000.00	1.063	8000.00	1.083	20000.00	1.208	10000.00	1.128
	7000.00	1.057	7000.00	1.077	15000.00	1.140	9000.00	1.090
	6000.00	1.050	6000.00	1.070	10000.00	1.128	8000.00	1.080
	5000.00	1.044	5000.00	1.065	9000.00	1.090	7000.00	1.070
	4000.00	1.038	4000.00	1.059	8000.00	1.080	6000.00	1.060

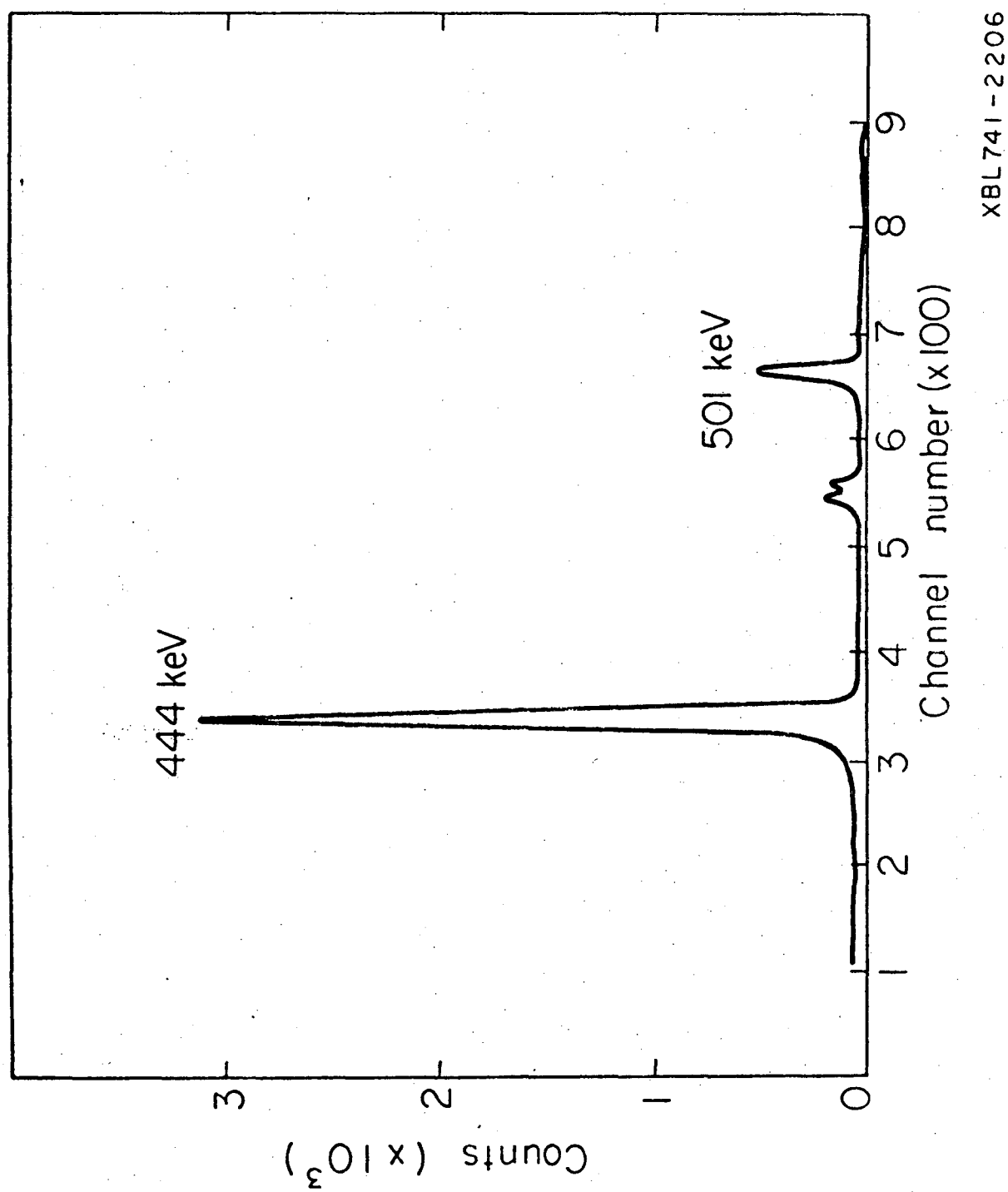

Fig. 15. The gamma-ray spectrum of ^{180m}Hf from Ge(Li) detector at the beginning of the experiment.

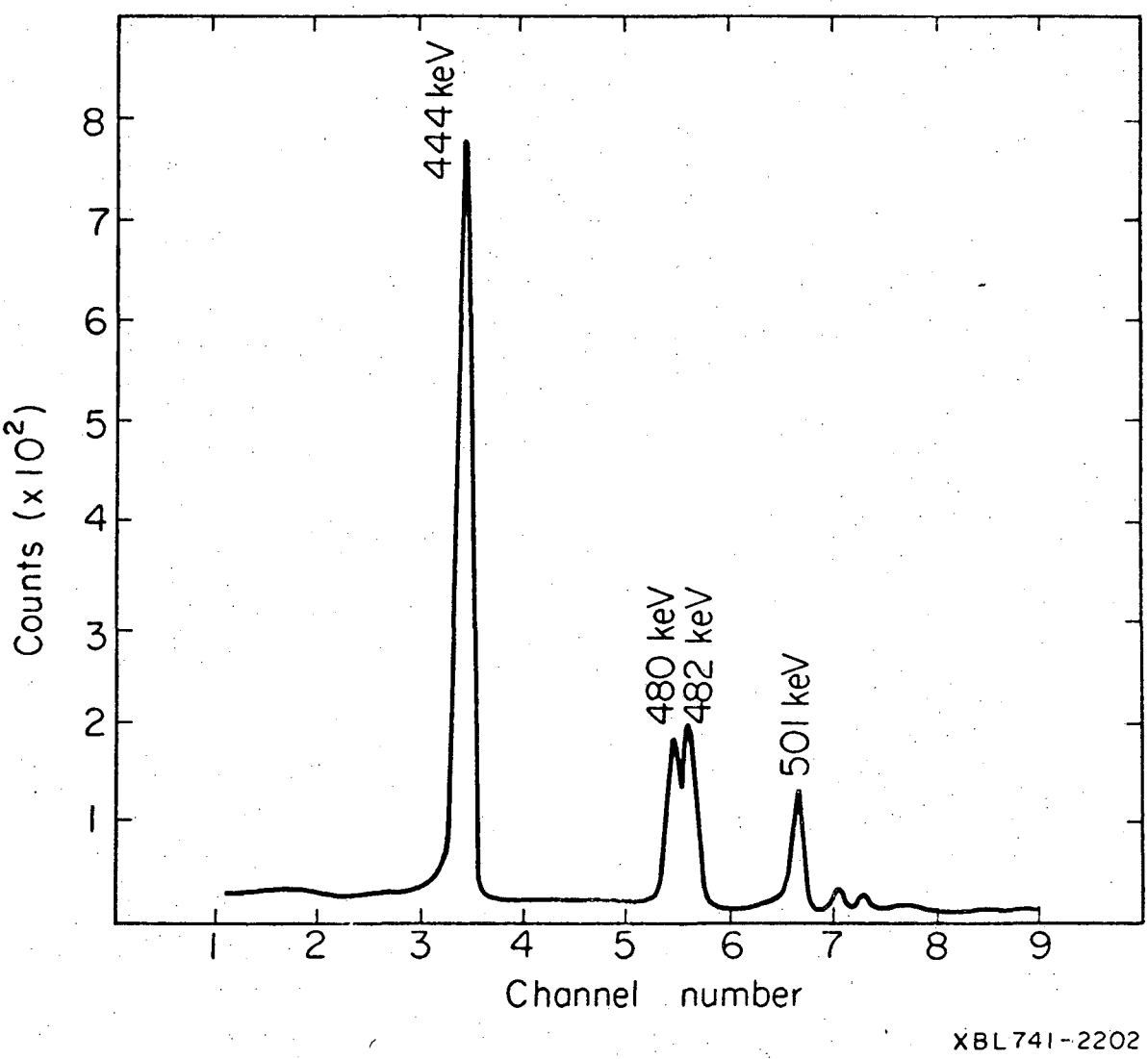

Fig. 16. The gamma-ray spectrum of ^{180m}Hf from Ge(Li) detector at the end of the experiment.

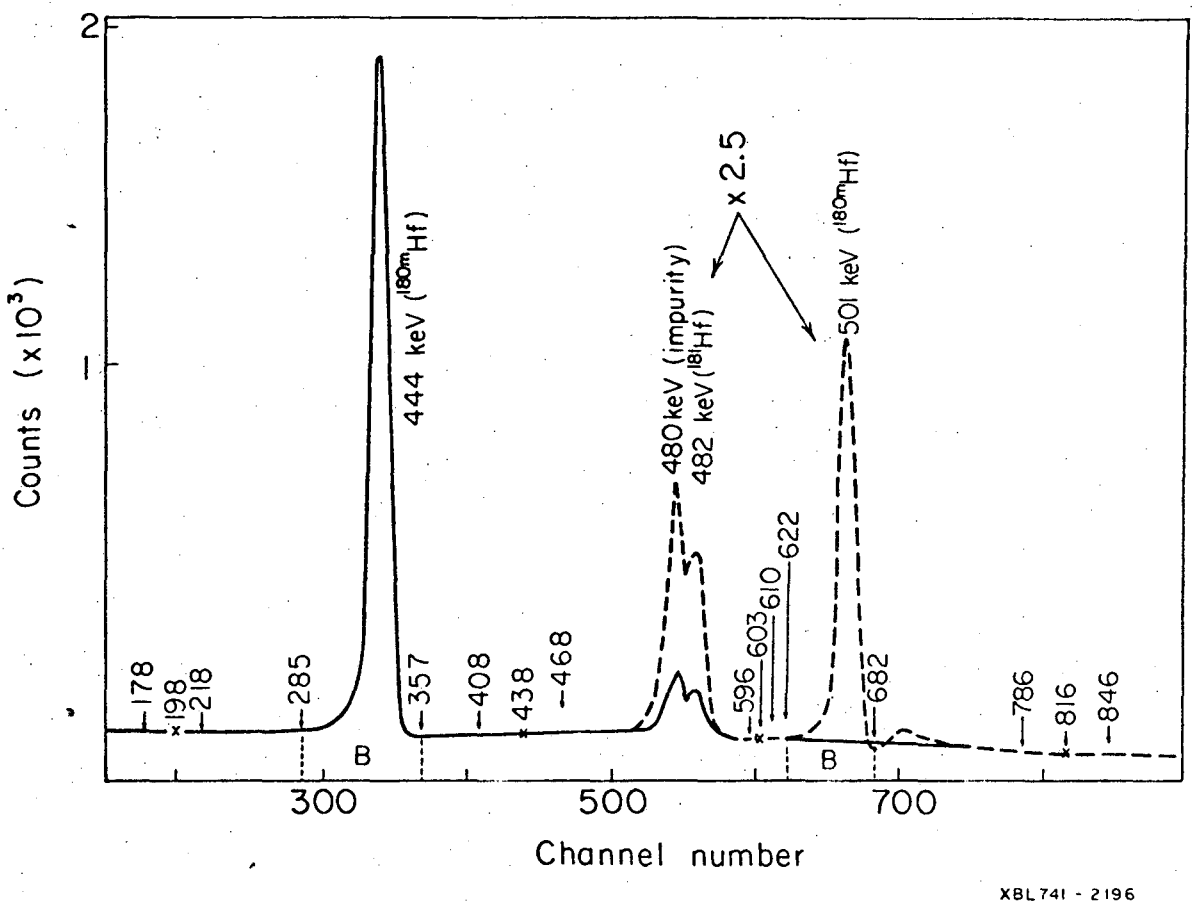

Fig. 17. The background subtraction process.

	channel no. 178(408)	as	marker 1(5)
	channel no. 218(468)	as	marker 2(6)
X on	channel no. 198(438)	as	the weigh average between marker 1(5) and marker 2(6)
	channel no. 285	as	marker 3, where integration starts
	channel no. 357	as	marker 4, where integration stops
	area B	as	background

The straight line is drawn through two X. The area under this line between marker 3 and marker 4 is taken as background.

E. Data Handling

About one to two thousand spectra are written on IBM tape. Each spectrum has two records. The first record serves as identifier (ID). The second record stores the gamma-ray spectrum from Ge(Li) detector and displays it into 1024 channels spectrum. The first two channels are the live time of the analyzer. Figure 18 shows the portion of these 1024 channels gamma-ray spectrum for two different magnetic field directions.

The program called SUMPAR was written to handle the photopeak area integration. The background correction is mentioned in Section D. SUMPAR does the following things:

1) Reads in the markers as input data
2) Reads the first record and ignores it
3) Reads the second record and identifies the data points to IDATA
4) Analyses the photopeaks by using the input markers
5) Normalizes the photopeak with respect to the live time of the analyzer.
6) Repeats the step 2 to 5 until the end of the experiment.
7) Prints out the information

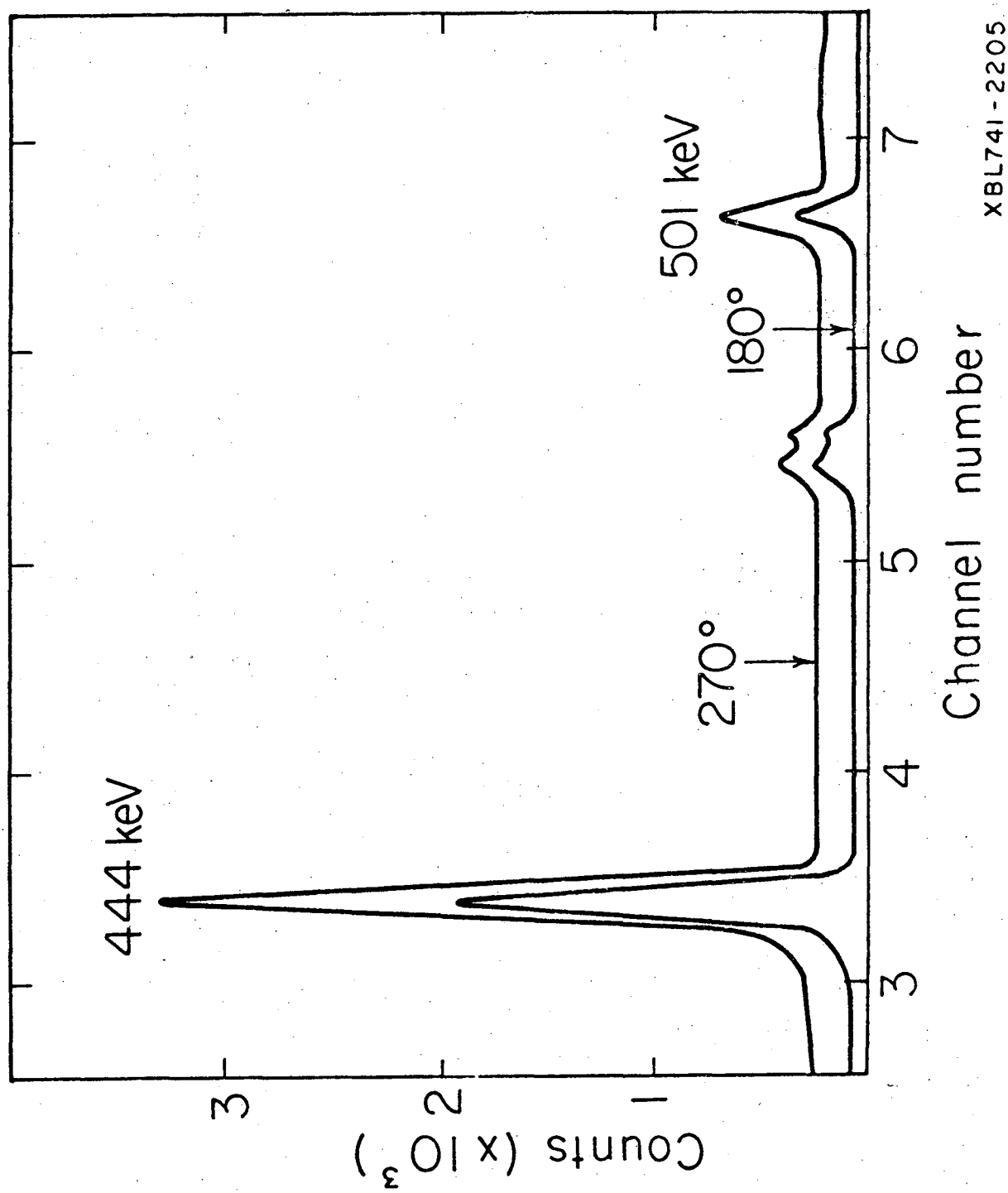

Fig. 18. The gamma spectra of ^{180m}Hf at different magnetic field direction.

SUMPAR gives the area of the photopeaks with linear background subtraction. This basic information is then fed into another two programs ANI501 and PARITY to evaluate the anisotropies of 444 keV gamma transition or ^{60}Co gamma transitions and the asymmetries of 501 keV gamma transition. The basic information from SUMPAR is inspected. The optimum combination of the spectra under the same magnetic condition is chosen. For this reason alone total automatic data analysis is not attempted. An example of the output of SUMPAR is presented on the following page.

F. Data Analysis

1. Error analysis. We use the fundamental formula of the propagation of errors:

$$\sigma_f = [(\frac{\partial f}{\partial x_1})^2 \cdot \sigma_1^2 + (\frac{\partial f}{\partial x_2})^2 \cdot \sigma_2^2 + \ldots + (\frac{\partial f}{\partial x_n})^2 \cdot \sigma_n^2]^{1/2}$$

where

$$\sigma_1 = x_1^{1/2} \quad , \quad \sigma_2 = x_2^{1/2} \quad , \ldots \quad \sigma_n = x_n^{1/2} \quad .$$

In the case of anisotropy of thermometers we have:

$$f = 2 \cdot \frac{W(90) - W(0)}{W(90) + W(0)}$$

$$\sigma_f = 4 \cdot \sqrt{(W(90) \cdot W(0)/(W(90) + W(0))^3}$$

For the temperature average of parity data (asymmetry) we simply use:

$$f = (x_1 + x_2 + \ldots + x_n)/n$$

$$\sigma_f = (\sigma_1^2 + \sigma_2^2 + \ldots + \sigma_n^2)^{1/2}/n$$

SUM OF COUNTS FOR FIELD ON/OFF

6/4/73

6 POINTS IN ∥ FIELD UNDER SUM
6 POINTS IN ⊥ FIELD UNDER SUM
50 NUMBER OF EXPERIMENTAL SETS(ON/OFF)
2 POINTS ARE SKIP
+0 NO OF THE FIRST FEW SPECTRA TO BE DROPED

ANGLE INCREASE 90° FOR EVERY 8 RUNS

RUN	444KEV	482KEV	501KEV	444KEV	482KEV	501KEV	444KEV	482KEV	501KEV	444KEV	482KEV	501KEV
	DETECTOR 1 270°			DETECTOR 2 0°			DETECTOR 3 90°			DETECTOR 4 180°		
1	355599.48	32543.33	56538.29	170119.73	26018.12	25084.01	287846.49	24939.89	44124.35	180119.55	26003.[illegible]	25452.22
2	213384.82	34411.25	32691.86	276783.56	25343.23	41466.78	175869.25	27130.89	26911.95	282233.92	25107.[illegible]	39621.45
3	341736.35	33341.30	53905.53	163451.29	26240.39	24896.28	278059.48	25715.28	42331.15	175556.81	27290.[illegible]	25048.02
4	202710.84	34723.68	32181.00	262157.23	25250.03	39382.94	168941.77	27331.30	25031.91	272275.86	25850.[illegible]	39067.53
5	325583.79	33843.54	51262.17	155933.89	26399.32	23023.66	266688.65	25922.02	40606.09	168945.91	27487.63	23883.46
6	193958.55	34532.86	29541.90	249331.75	25397.83	37959.60	163181.70	28094.98	24790.63	262589.30	26251.17	37890.46
7	309930.96	33759.70	48919.73	148438.53	26565.43	22214.15	254487.64	26986.25	39239.95	163407.12	28240.76	23279.54
8	185104.44	35088.77	29078.89	237324.67	25877.96	35518.40	157385.96	28254.84	23611.87	251746.80	26555.40	36407.01
9	293481.21	34044.33	46233.11	141582.95	26641.58	21121.78	244127.71	27030.88	37228.53	157619.24	28334.79	22581.04
10	177580.03	34797.22	27078.26	225104.36	25778.69	33959.54	150328.58	28208.51	23469.71	243479.61	27507.25	34612.29
11	278633.31	34580.85	44152.87	135411.17	26439.68	20650.28	232822.17	27747.93	35498.62	152600.05	28674.47	21176.29
12	170474.51	34994.13	26583.26	214352.63	26150.90	32012.52	145715.32	28550.08	22128.39	233064.08	27333.89	33228.55
13	263399.12	34752.09	41776.20	130408.06	26610.11	19281.39	222346.50	28026.28	34459.09	147730.35	29290.51	20920.67
14	163589.33	35542.04	25311.76	200835.71	26286.99	30092.90	140302.89	28953.85	21829.58	222433.37	28092.13	32069.49
15	249835.52	34395.02	39369.25	124243.60	26577.07	18773.25	211867.00	28198.49	32500.32	142975.06	29429.54	19926.61
16	157143.90	34819.32	24654.28	190593.84	25957.69	28297.80	135351.65	28677.46	20272.58	212359.33	28203.96	30821.26
17	237407.93	34591.80	37076.37	120069.17	26649.58	17713.16	199348.25	28153.77	30791.34	137514.65	29054.01	19596.56
18	150342.45	35732.81	23233.90	178905.48	26122.47	26904.67	129696.64	29364.32	19659.79	202615.70	28450.[illegible]	29009.30
19	222919.43	34608.27	35097.32	115529.11	26821.23	16997.79	189973.44	28429.23	28721.39	132466.97	29315.11	18633.93
20	144333.45	35418.77	22393.61	168717.04	26250.83	25043.18	123972.75	28686.97	19088.57	192579.55	29901.[illegible]	27683.46
21	210500.52	35003.74	33112.47	109715.56	26995.46	16149.23	180181.59	28166.08	27519.39	128058.17	30345.30	18242.82
22	137643.52	35378.94	21705.01	159472.45	26407.11	23813.74	118919.36	28420.74	18298.86	183785.47	29293.72	26319.11
23	198542.73	34979.88	31301.41	105350.77	26500.81	15527.09	169455.25	28292.48	26504.75	123866.21	30557.33	16974.56
24	131569.24	35943.80	20995.04	149630.33	26351.92	22837.78	113452.00	28354.43	17177.64	174534.10	30133.[illegible]	25330.95
25	187338.35	35451.91	29774.75	99734.78	26710.09	14822.67	160218.06	28054.20	24483.20	117734.91	30640.01	16723.68
26	125252.74	35701.89	19341.54	142193.97	26719.87	21574.15	108464.06	28264.85	16649.26	165652.24	30185.[illegible]	23683.77
27	177076.97	35197.30	28158.28	95369.16	26785.23	14094.22	151298.56	28069.33	22655.44	113304.29	30745.48	16027.62
28	119068.63	35363.15	19003.06	133104.33	26382.60	19764.64	103889.64	28362.09	15799.52	156416.76	30351.03	22648.43
29	165991.28	34811.45	25818.10	90764.08	26922.25	13279.03	143525.62	28176.24	22005.03	109096.32	30835.97	15479.36
30	113502.06	35538.17	17719.64	125579.63	26535.27	18405.94	98363.83	28570.58	15485.28	148410.44	29921.[illegible]	21332.72
31	157052.73	35498.25	24745.85	86086.61	26779.06	12893.26	135193.22	28244.44	20616.58	103282.61	31150.52	14585.93
32	108736.90	35726.79	17139.39	118277.04	26329.26	17694.38	94293.74	28583.53	14062.48	141004.48	30200.27	20058.54
33	147726.53	35531.41	23506.01	81438.50	26959.35	12214.30	127917.16	28668.97	19785.18	98957.16	30833.[illegible]	14447.08
34	103140.43	35093.61	15891.29	111099.18	26858.13	16573.77	89960.32	28933.11	14160.16	134065.67	30313.72	19287.48
35	139453.60	35161.18	22072.32	77919.31	26335.97	11612.34	121524.21	28811.46	18624.43	94683.78	30935.[illegible]	13370.64
36	98632.17	35784.74	15773.65	104449.16	26436.50	15735.06	85552.06	28757.82	13565.50	126909.54	29954.[illegible]	18310.20
37	130095.16	35086.36	20615.33	74644.83	26329.06	10993.15	113743.98	28674.99	17415.82	90664.90	30453.[illegible]	13380.23
38	92925.13	35203.83	14662.94	99246.38	26542.20	14955.21	81884.09	28941.95	12816.39	119385.36	30622.73	17452.65
39	123373.57	34786.39	19422.14	69775.75	26519.03	10785.56	107065.93	29106.56	16710.46	86268.39	30308.15	12524.38
40	87652.98	35252.26	13842.39	93493.54	26126.63	14192.70	78303.83	29644.95	11887.33	113787.41	30479.58	16273.37
41	116468.53	35359.37	18889.31	66210.98	26614.28	9608.79	102298.23	29387.17	15777.80	81504.62	30853.[illegible]	11673.75
42	83415.03	34750.36	13347.51	87161.86	26420.43	13090.04	74435.45	29655.80	11573.27	107251.92	30594.[illegible]	15292.70
43	109063.53	34817.91	17312.47	62867.61	26332.27	9552.09	96080.30	29581.60	15385.28	78429.62	30385.47	11181.29
44	79849.04	35100.79	12536.24	82172.94	26027.30	12265.41	70547.76	29552.56	11176.08	100570.44	30392.52	14924.92
45	102796.19	35028.50	16755.84	59570.51	26140.70	9003.02	91172.38	29761.51	14424.06	73651.81	31137.64	11073.83
46	77890.55	35362.20	12540.30	75965.52	25920.16	11492.96	69064.92	29796.43	10908.84	94063.65	31143.85	13829.79
47	88564.47	34830.95	14247.42	69116.64	25979.27	10659.85	79503.80	29591.31	12178.78	85642.92	31115.55	12365.80
48	87303.81	34931.08	13687.02	66330.30	25990.62	9901.80	76946.68	29608.81	12079.81	82983.83	30341.63	11637.67
49	84020.54	34951.32	12988.76	64664.67	25860.60	9634.00	74634.86	29271.03	11403.08	80223.77	31131.00	11747.51
50	81398.07	34519.04	13077.65	63258.32	25658.02	9528.36	72605.59	29213.03	11006.02	78230.73	30829.31	11288.34

***** END OF SUM *****

The above mentioned error analysis must be modified to suit the way we analyze the data. In order to correct the decay of the activity, the triple correlation at each experiment point is employed. The properly weighted average in this case is weighted by $\sqrt{3/2}$ of the error, σ. Let x_{i-1}, x_i, x_{i+1} are total counts accumulated in some regular time interval at the average time t_{i-1}, t_i, t_{i+1}, respectively. Where x's are experiment points after correcting the electronic blockage. It is essential to do this in order to employ the following formulae.

$$B_i = \mathrm{Exp}\{(\ln x_{i-1} - \ln x_{i+1})(t_{i+1} - t_i)/(t_{i+1} - t_{i-1})\}$$

$$A_i = 2 \cdot (x_i - B_i)/(x_i + B_i)$$

$$\sigma_{A_i} = 4 \cdot \sqrt{x_i \cdot B_i/(x_i + B_i)^3}$$

where B_i are total activities at time t_i calculated from its nearest-neighbor points, x_{i-1} and x_{i+1} at time t_{i-1} and t_{i+1}, respectively. A_i can be either asymmetry of the 501 keV gamma-ray or anisotropy of the 444 keV gamma-ray.

The weighing process is done in two ways to take care of the different warm-up characteristic of salt pill in different experiments.

a) <u>For the narrow temperature variation experiments</u>

The experiments of 6/20/73, 6/29/73, and 10/2/73 have a very small temperature variation. In these experiments the average temperatures are used. First the weighted average on A_i is employed:

$$\bar{A} = \frac{\sum_{1}^{N} A_i/(3/2 \cdot \sigma_{A_i}^2)}{\sum_{1}^{N} 1/(3/2 \cdot \sigma_{A_i}^2)}$$

$$\bar{\sigma}_{\bar{A}} = \sqrt{4/3} \left\{ \sum_{1}^{N} 1/(3/2 \cdot \sigma_{A_i}^2) \right\}^{-1/2}$$

Then the corresponding parity mixing ratio and its error, $\bar{\varepsilon}$ and $\bar{\sigma}_{\bar{\varepsilon}}$, are evaluated from $\bar{A}$ and $\bar{\sigma}_{\bar{A}}$, respectively.

b) <u>For the wide temperature variation experiments</u>

Only the experiment of 6/4/73 has the wide temperature variation in experiments which we used to analyze the parity mixing ratio. In this case the data analysis is done as following: First the corresponding parity mixing ratio and its error are evaluated from A_i and σ_{A_i} and temperatures from the anisotropy of the 444 keV gamma-ray at time t_i. Then the properly weighing process for parity mixing ratio is carried out as:

$$\bar{\varepsilon} = \frac{\sum_{1}^{N} \varepsilon_i/(3/2 \cdot \sigma_{\varepsilon_i}^2)}{\sum_{1}^{N} 1/(3/2 \cdot \sigma_{\varepsilon_i}^2)}$$

$$\bar{\sigma}_{\bar{\varepsilon}} = \sqrt{4/3} \left\{ \sum_{1}^{N} 1/(3/2 \cdot \sigma_{\varepsilon_i}^2) \right\}^{-1/2}$$

2. <u>Magnetic hyperfine splitting</u>. The magnetic hyperfine splitting can be obtained by knowing the anisotropy and the temperature. Temperature can be measured either internally (the nucleus serving as thermometer sits

in the same equivalent lattice sites as the nucleus at which the magnetic hyperfine splitting is to be evaluated) or externally. There are not available data for ^{60}Co in $ZrFe_2$. $^{60}Co(Fe)$ is a well known thermometer. The effective hyperfine field of Hf in iron as an impurity is too small when the foil is prepared by melting. The secondary internal thermometer other than 444 keV gamma transition from ^{180m}Hf is not available. Although external thermometry has several drawbacks, with careful data evaluation and some precautions one can reach the same precision as internal thermometry. By using an external thermometer, several reasons which cause a temperature gradient between the sample and the thermometer must be taken into consideration.

a) <u>The sample and the thermometer at different locations</u>

In the case of a very hot active sample with poor thermal conductivity to the heat sink, the temperature gradient between the thermometer and the sample can be huge. The thermometer can read essentially the sink temperature while the sample is actually at an order of magnitude higher temperature. This situation was actually met in the early experiments.

b) <u>The sample and the thermometer at the same location</u>

Different thermal paths for the sample and the thermometer can make them read different temperatures. This happened when the sample had a great thermal boundary resistance due to the improper soldering, even when the $^{60}Co(Fe)$ foil sat on the top of the sample and the sample was directly soldered to the copper fin. The iron foil would see the lower temperature through the soft solder joint, and the poor thermal conductivity between the sample and the copper fin prevented the sample from cooling down.

Due to the difficulty of wetting the sample, soft solder instead of In or Wood's Metal solder was used, with acidic flux. Electroplating nickel on the sample worked equally well. The ^{60}Co(Fe) external thermometer was carefully calibrated as listed in Table IV. The temperature in column 4 was evaluated based on D(EXP), where D(EXP) = -8.6868×10^{-18} erg, corresponding to magnetic splitting of 7.9±0.5 mK. D(EXP) is a product of magnetic moment and hyperfine field (UH). D(^{60}Co) is UH based on the temperature evaluated from the anisotropy of ^{60}Co(Fe). The reason for using the weak source strength of ^{60}Co is that the stronger source strength of ^{60}Co presents two problems: a) The signal to noise ratio became worse due to high Compton background from ^{60}Co in the 444 keV and 501 keV regions. It became progressively worse as the ^{180m}Hf decayed. b) More heat load was introduced to the heat sink. Even with this weak source strength one still is able to say that D(EXP) is in agreement with D(^{60}Co) within 10% and that is the accuracy that most experiments obtained.

3. Internal thermometer. Knowing the magnetic hyperfine splitting of ^{180m}Hf in $ZrFe_2$, one can determine the sample temperature internally by measuring the anisotropy of the 444 keV gamma transition. A typical internal temperature evaluation based on Det. 1(112-C) is illustrated in Table V. The data in Table V are taken from the experimental results of 6/4/73. Anisotropy is defined as the intensity ratio of the intensity difference in 90° and 0° to its average value. ANI in column 6(7) is the anisotropy evaluated at the data point of 90°(270°) to the polarization axis. Of course, one can evaluate the anisotropy at the data point of 0° and 180° in the same manner as ANI and AN2. The difference is expected to be small. The rest of the experimental results are presented in Table IX.

Table IV. Determination of the Hyperfine Interaction

Time (MIN)	444 keV ANI(90)	444 keV AN2(270)	TEMP. (mK)	^{60}Co ANI(90)	^{60}Co AN2(270)	TEMP. (mK)	$\frac{D(^{60}Co)}{D(EXP)}$
16		.32811(368)	27.75(21)		.1866(211)	28.1(2.0)	1.09
48	.33551(381)		27.32(22)	.2170(209)		25.7(1.3)	0.93
80		.33310(395)	27.46(23)		.2058(211)	26.5(1.7)	0.97
112	.31575(409)		28.51(26)	.2268(207)		25.0(1.4)	0.88
144		.31575(422)	28.40(26)		.2026(209)	26.7(1.7)	0.92
176	.30382(437)		29.27(29)	.2058(211)		26.5(1.7)	0.91
208		.29060(452)	30.17(32)		.2181(208)	25.6(1.5)	0.84
240	.29409(467)		29.92(31)	.2080(206)		26.3(1.6)	0.89
272		.29706(483)	29.72(32)		.1808(208)	28.7(1.9)	0.95
304	.29225(499)		30.05(36)	.1606(210)		30.7(2.4)	1.01
336		.27674(516)	31.17(40)		.1675(207)	29.9(2.2)	0.96
368	.26097(534)		32.40(44)	.1711(207)		29.6(2.1)	0.91
400		.25859(551)	32.60(45)		.2070(207)	26.4(1.6)	0.82
432	.25263(571)		33.09(51)	.1873(208)		28.0(1.9)	0.85
464		.24922(590)	33.39(51)		.1647(207)	30.3(2.2)	0.91
496	.24448(608)		33.80(53)	.1281(207)		34.9(3.1)	1.04
528		.23366(631)	34.79(59)		.1712(205)	29.2(1.5)	0.83
560	.23971(649)		34.23(60)	.1527(205)		31.6(2.4)	0.92
592		.23675(670)	34.51(62)		.1190(207)	36.5(3.5)	1.06
624	.22567(696)		35.57(69)	.1392(206)		33.4(2.8)	0.94
656		.23274(715)	34.88(66)		.0946(207)	41.8(5.0)	1.20
688	.22063(740)		36.07(78)	.1540(205)		31.5(2.4)	0.87
720		.21064(766)	37.13(86)		.1728(205)	29.5(2.0)	0.79

4. Asymmetry of the 501 keV γ-ray. The results of the asymmetry measurements of the 501 keV gamma transition from ^{180m}Hf are presented in Table V with the experimental results of 6/4/73, 6/20/73, 6/29/73, 10/2/73. AAW in column 4(5) is the average value of W(180D) and AW(OD)(AW(180D) and W(OD)). AW(OD) is the arithmetic average of W(OD)s at equal time before and after W(180D). The true W(OD) at the data point of W(180D) is expected to be very close to AW(OD) in the 16 min time interval. The error in column 6 is evaluated as mentioned in Section F of 1 error analysis. All the results of different experiments agree with each other pretty well. Det. 2(102-6) in the experiments of 6/20/73 and 6/29/73 had magnetic field dependent characteristics. Whether the small asymmetries in these two experiments is due to this characteristic or not is not known.

5. Asymmetry test. Asymmetry tests of the 444 keV gamma transition from ^{180m}Hf served as a systematic asymmetry test. The result is presented in Table VII, and it shows there is no systematic asymmetry bigger than 0.0005(9) in Det. 1 of 6/4/73, while the asymmetry we observed in 501 keV gamma transition is 0.022(3). It is clearly shown in this result that the asymmetry of the 501 keV is real. ^{60}Co asymmetry tests were also carried out. The results in 11/2/73, 11/8/73, 11/13/73, and 11/15/73 are not as convincing as the results from the 444 keV gamma transition due to insufficient statistics, although it is negative. The stronger source of ^{60}Co alone in the early experiment showed no asymmetry but the system was modified later due to its vulnerability to superfluid leaks.

6. Parity mixing ratio. The results of parity mixing ratio are presented in Table VIII. The only ambiguity in the determination of the

TABLE V ANISOTROPY OF THE 444 KEV GAMMA RAY

DET 1 444 KEV 6/4/73

TIME IN MINS	W(90)	W(180)	W(270)	AN1(90)	AN2(270)/	ERROR	TOP (ATUME (%))
0			473514.68				
16.00	256527.00						
32.00		450743.44		.57656		.00229	17.7 ± .1
48.00			241725.96				
64.00			424652.83		.57253	.00236	17.9 ± .1
80.00	224897.47						
96.00		399022.46		.56536		.00243	18.0 ± .1
112.00			217654.91				
128.00			374206.47		.55108	.00251	18.5 ± .1
144.00	207537.96						
160.00		351911.61		.53677		.00259	18.5 ± .1
176.00			198082.98				
192.00			328641.29		.51767	.00267	19.5 ± .1
208.00	189012.73						
224.00		308614.39		.50213		.00276	20.0 ± .1
240.00			180403.40				
256.00			290597.09		.49028	.00284	20.6 ± .1
272.00	171815.14						
288.00		269823.48		.46540		.00294	21.3 ± .1
304.00			164123.99				
320.00			252307.05		.44959	.00303	21.9 ± .1
336.00	155441.97						
352.00		235959.98		.43433		.00314	22.5 ± .1
368.00			148014.18				
384.00			220479.22		.42032	.00324	23.0 ± .1
400.00	140156.58						
416.00		206865.41		.41131		.00334	23.5 ± .1
432.00			132137.10				
448.00			192166.73		.39264	.00346	24.4 ± .1
464.00	125740.64						
480.00		180485.01		.38024		.00357	24.9 ± .2
496.00			119369.43				
512.00			168458.50		.36418	.00368	25.8 ± .2
528.00	113246.48						
544.00		157928.54		.35286		.00380	26.4 ± .2
560.00			107934.77				
576.00			146173.67		.33329	.00394	27.5 ± .2
592.00	101424.30						
608.00		137633.56		.33409		.00406	27.6 ± .2
624.00			95418.31				
640.00			129335.20		.32727	.00418	27.8 ± .2
656.00	90592.81						
672.00		120363.64		.30481		.00432	29.2 ± .3
688.00			86544.31				

DET 2 444 KEV 6/4/73

TIME IN MINS	W(90)	W(180)	W(270)	AN1(90)	AN2(270)/	ERROR
0	204996.47					
16.00		386546.82		.63701		.00248
32.00			193105.13			
48.00			358451.37		.61545	.00257
64.00	186549.44					
80.00		334519.31		.60424		.00266
96.00			174136.54			
112.00			312710.69		.59433	.00275
128.00	164821.95					
144.00		291106.92		.57777		.00283
160.00			156904.92			
176.00			272593.37		.56116	.00294
192.00	149865.50					
208.00		244974.47		.52688		.00307
224.00			141726.26			
240.00			234487.92		.51145	.00316
256.00	136289.72					
272.00		217294.71		.47892		.00328
288.00			130428.24			
304.00			202590.02		.46122	.00339
320.00	123003.67					
336.00		189449.17		.44741		.00350
352.00			117489.66			
368.00			175815.78		.42719	.00363
384.00	110474.35					
400.00		164650.53		.42335		.00374
416.00			105139.06			
432.00			151428.14		.39973	.00388
448.00	99560.65					
464.00		143476.81		.38923		.00400
480.00			92680.35			
496.00			133985.33		.37995	.00414
512.00	88489.64					
528.00		124762.59		.36360		.00428
544.00			84315.48			
560.00			116357.03		.34229	.00442
576.00	80430.02					
592.00		107475.24		.34533		.00455
608.00			74312.62			
624.00			102660.87		.34432	.00470
640.00	70636.00					
656.00		99237.28		.32380		.00487
672.00			66837.67			
688.00			89354.05			

DET 3 444 KEV 6/4/73

TIME IN MINS	W(90)	W(180)	W(270)	AN1(90)	AN2(270)/	ERROR
0		477604.24				
16.00			227177.68			
32.00			447755.46		.67630	.00230
48.00	215887.91					
64.00		414285.68		.64530		.00239
80.00			206647.53			
96.00			379807.08		.61110	.00250
112.00	197483.48					
128.00		355140.40		.59674		.00258
144.00			186506.23			
160.00			331450.20		.57790	.00267
176.00	179486.05					
192.00		319462.84		.55539		.00275
208.00			171794.73			
224.00			292426.77		.53309	.00285
240.00	164663.76					
256.00		286868.40		.49727		.00296
272.00			156613.54			
288.00			250754.85		.48710	.00305
304.00	149563.54					
320.00		234301.51		.47079		.00316
336.00			141546.26			
352.00			216716.10		.44559	.00327
368.00	134046.17					
384.00		201944.63		.42892		.00339
400.00			127267.18			
416.00			188031.15		.40884	.00350
432.00	121158.53					
448.00		176484.99		.40200		.00361
464.00			113789.16			
480.00			164436.75		.38794	.00374
496.00	109304.61					
512.00		154097.64		.42786		.00388
528.00			102547.63			
544.00			145153.22		.37208	.00397
560.00	96768.29					
576.00		134444.29		.38890		.00414
592.00			92018.73			
608.00			125406.91		.33202	.00425
624.00	87434.66					
640.00		124042.11		.38995		.00439
656.00			87539.30			
672.00			110699.94		.32109	.00452
688.00	77679.82					

DET 4 444 KEV 6/4/73

TIME IN MINS	W(90)	W(180)	W(270)	AN1(90)	AN2(270)/	ERROR
0			234194.48			
16.00			460371.39		.72684	.00259
32.00	220880.21					
48.00		430571.41		.64238		.00235
64.00			215894.60			
80.00			402535.35		.67634	.00275
96.00	207006.47					
112.00		372266.93		.59129		.00252
128.00			187649.74			
144.00			353787.21		.63333	.00292
160.00	189037.60					
176.00		332341.60		.56318		.00264
192.00			182649.14			
208.00			311034.53		.58342	.00311
224.00	175682.05					
240.00		291442.49		.51725		.00284
256.00			167771.18			
272.00			272884.46		.53788	.00329
288.00	160542.97					
304.00		255156.94		.47413		.00302
320.00			154296.40			
336.00			240312.54		.49174	.00350
352.00	148414.75					
368.00		224966.36		.43830		.00331
384.00			139913.32			
400.00			210394.43		.48022	.00374
416.00	133844.87					
432.00		195964.14		.39786		.00343
448.00			128139.53			
464.00			183451.44		.41436	.00393
480.00	120350.29					
496.00		172816.10		.38158		.00364
512.00			114947.47			
528.00			162852.30		.40319	.00422
544.00	108826.47					
560.00		152479.14		.35982		.00387
576.00			103478.55			
592.00			142189.94		.36817	.00445
608.00	97702.12					
624.00		134903.53		.34869		.00411
640.00			91533.44			
656.00			129656.68		.33565	.00425
672.00	87594.85					
688.00		116753.50				

TABLE VI ASYMMETRY OF THE 501 KEV GAMMA RAY

TIME IN MIN.	W(0 0)	W(180D)	W(180D)-AW(0D) / AAW	AW(180D)-W(0D) / AAN	ERROR	TEMPERATURE (mK)	PARITY MIXING RATIO
DET. 1 6/4/73							
16.00	39992.10						
48.00		39255.37	.0409		.007209	17.75	- 7.85 + 1.34
80.00	35507.32			.0410 .007426		17.90	- 7.92 + 1.38
112.00		34860.60	.0321		.007634	18.35	- 6.26 + 1.41
144.00	32099.23			.0306 .007832		18.70	- 6.08 + 1.45
176.00		31424.28	.0175		.008012	19.20	- 3.52 + 1.51
208.00	29705.60			.0131 .008178		19.75	- 3.68 + 1.64
240.00		28825.38	.0187		.008368	20.20	- 3.88 + 1.82
272.00	26943.59			.0129 .008588		20.85	- 2.77 + 1.87
304.00		25843.06	-.0032		.008790	21.60	0.70 + 1.91
336.00	24948.25			-.0011 .008956		22.20	0.26 + 1.94
368.00		24032.32	.0271		.009183	22.75	- 6.13 + 2.00
400.00	21930.44			.0360 .009462		23.35	- 8.39 + 2.15
432.00		21506.13	.0288		.009712	23.85	- 6.74 + 2.21
464.00	19910.39			.0203 .009971		24.65	- 4.87 + 2.37
496.00		19195.74	.0230		.010265	25.35	- 5.66 + 2.63
528.00	17672.94			.0373 .010537		26.10	- 8.35 + 2.70
560.00		17530.42	.0356		.010774	26.85	- 9.12 + 2.76
592.00	16193.41			.0085 .011090		27.60	- 2.22 + 2.84
624.00		15215.65	-.0115		.011432	27.60	2.95 + 2.93
656.00	14630.06			-.0132 .011730		28.50	3.55 + 3.26
688.00		13700.17	-.0322		.011983	29.20	8.79 + 3. 2
720.00	13691.52						
TEMP. AVERAGE STANDARD DEVIATION				.021784	.002837	WEIGHTED AVERAGE =	- 4.64 + 0.59
DET. 2 6/4/73							
0	29968.85						
32.00		29703.43	.0416		.008289	16.3	- 7.62 + 1.51
64.00	27089.83			.0251 .008538		16.85	- 4.68 + 1.55
96.00		25979.10	.0084		.008792	17.10	- 1.57 + 1.69
128.00	24498.55			.0163 .008998		17.45	- 3.09 + 1.73
160.00		23865.99	.0254		.009212	17.95	- 4.92 + 1.77
192.00	22097.39			.0239 .009456		18.70	- 4.74 + 1.85
224.00		21462.57	.0170		.009694	19.45	- 3.45 + 1.90
256.00	20147.34			.0093 .009940		20.25	- 1.95 + 2.07
288.00		19266.79	.0053		.010202	21.15	- 1.13 + 2.22
320.00	18229.59			.0065 .010457		21.75	- 1.42 + 2.27
352.00		17474.17	.0038		.010708	22.40	- 0.96 + 2.38
384.00	16623.99			-.0024 .010975		22.90	0.55 + 2.44
416.00		15738.60	.0041		.011284	23.50	- 0.88 + 2.62
448.00	14780.02			.0157 .011586		24.25	- 3.70 + 2.76
480.00		14323.29	.0130		.011855	24.75	- 3.13 + 2.82
512.00	13523.41			.0020 .012155		25.40	- 0.51 + 3.04
544.00		12819.07	.0022		.012498	26.35	- 0.55 + 3.20
576.00	12097.55			.0189 .012796		26.85	- 4.88 + 3.36
608.00		11856.79	.0507		.013147	26.80	- 13.20 + 3.46
640.00	10499.07			.0577 .013596		27.60	- 15.06 + 3.50
672.00		10433.87	.0280		.013940	28.00	- 10.05 + 3.67
704.00	9804.45						
TEMP. AVERAGE STANDARD DEVIATION				.017294	.003279	WEIGHTED AVERAGE =	- 3.78 + 0.68
DET. 3 6/4/73							
16.00		34497.51					
48.00	31303.20			.0428 .007905		15.35	- 7.61 + 1.46
80.00		30944.69	.0226		.008084	16.15	- 4.11 + 1.50
112.00	29239.52			.0248 .008218		16.80	- 4.61 + 1.52
144.00		29035.45	.0305		.008362	17.25	- 5.77 + 1.60
176.00	27126.72			.0262 .008529		17.85	- 5.06 + 1.64
208.00		26705.62	.0345		.008727	18.55	- 6.70 + 1.71
240.00	24535.69			.0254 .008970		19.45	- 5.20 + 1.87
272.00		23716.91	.0023		.009188	20.20	- 0.62 + 1.91
304.00	22822.38			-.0064 .009376		20.70	1.36 + 1.95
336.00		21681.67	.0125		.009634	21.45	- 2.72 + 2.09
368.00	20091.24			.0194 .009928		22.35	- 4.33 + 2.25
400.00		19353.60	.0125		.010197	23.05	- 2.88 + 2.42
432.00	18183.25			.0193 .010437		23.75	- 4.52 + 2.48
464.00		17755.42	.0402		.010717	24.10	- 9.52 + 2.55
496.00	15999.59			.0556 .011020		23.65	- 13.90 + 2.62
528.00		16114.04	.0256		.011211	23.85	- 6.00 + 2.67
560.00	15417.97			-.0071 .011410		24.05	1.67 + 2.72
592.00		14543.52	.0094		.011754	25.75	- 2.34 + 2.93
624.00	13462.75			.0249 .012111		25.85	- 6.34 + 3.19
656.00		13098.35	.0042		.012370	26.35	- 1.05 + 3.26
688.00	12638.16			.0110 .035384		28.0	- 2.92 + 8.31
720.00		12328.97					
TEMP. AVERAGE STANDARD DEVIATION				.022089	.003044	WEIGHTED AVERAGE =	- 4.64 + 0.64
DET. 4 6/4/73							
0		32007.11					
32.00	31330.07			-.0172 .008024		15.35	3.04 + 1.49
64.00		29630.32	-.0130		.008189	15.40	2.36 + 1.52
96.00	28762.99			-.0028 .008344		16.10	0.87 + 1.55
128.00		27767.47	.0193		.008527	16.60	- 3.56 + 1.68
160.00	25790.20			.0300 .008739		17.00	- 5.63 + 1.65
192.00		25433.96	.0210		.008914	17.70	- 4.09 + 1.71
224.00	24051.46			.0177 .009078		18.40	- 3.44 + 1.78
256.00		23565.12	.0204		.009259	19.05	- 4.01 + 1.85
288.00	22163.60			.0178 .009457		19.30	- 3.40 + 1.93
320.00		21601.37	.0305		.009694	20.55	- 6.66 + 2.02
352.00	19806.83			.0345 .009960		21.20	- 7.45 + 2.12
384.00		19457.03	.0167		.010180	21.80	- 3.67 + 2.20
416.00	18487.25			.0051 .010388		22.70	- 1.15 + 2.24
448.00		17747.38	.0126		.010649	23.60	- 2.95 + 2.54
480.00	16613.47			.0281 .010894		23.85	- 6.61 + 2.59
512.00		16450.50	.0349		.011120	24.20	- 7.98 + 2.71
544.00	15190.24			.0286 .011391		24.75	- 6.93 + 2.78
576.00		14851.20	.0110		.011636	25.60	- 2.66 + 2.91
608.00	14203.38			-.0138 .011907		25.90	3.44 + 3.13
640.00		13214.88	-.0140		.012259	26.80	3.60 + 3.31
672.00	12644.20			.0340 .034967		27.20	- 8.77 + 9.20
704.00		12519.82					
TEMP. AVERAGE STANDARD DEVIATION				.012656	.003064	WEIGHTED AVERAGE =	- 2.52 + 0.63

TABLE VI ASYMMETRY OF THE 501 KEV GAMMA RAY

TIME IN MIN.	W(0 D)	W(180D)	W(180D)-W(0D) / AAW	AW(180D)-W(0D) / AAW	ERROR
DET.1 6/20/73					
0		24569.63			
32.00	23089.46			.0076	.009289
64.00		22031.50	.0209		.009577
96.00	20162.30			.0156	.009920
128.00		19036.19	-.0019		.010245
160.00	18040.14			-.0004	.010530
192.00		17082.95	.0140		.010858
224.00	15729.54			.0248	.011205
256.00		15220.14	.0357		.011563
288.00	13712.67			.0240	.012003
320.00		12962.52	.0107		.012454
352.00	11994.84			.0202	.012847
384.00		11556.98	.0386		.013279
416.00	10308.69			.0548	.013731
448.00		10260.86	.0354		.014082
480.00	9514.54			-.0022	.014507
512.00		8783.08	-.0113		.015047
544.00	8292.43			-.0053	.015551
576.00		7746.72	.0106		.016110
608.00	7084.82				
TEMP. AVERAGE STANDARD DEVIATION				.015976	.003957
DET.2 6/20/73					
16.00		45549.08			
48.00	43251.01			-.0020	.006803
80.00		40908.03	.0059		.007002
112.00	33240.46			.0191	.007197
144.00		37139.68	.0196		.007374
176.00	34682.09			-.0000	.007594
208.00		32385.87	-.0094		.007840
240.00	30818.61			-.0021	.008060
272.00		29205.67	.0069		.008290
304.00	27296.06			.0085	.008542
336.00		25947.56	.0162		.008815
368.00	23881.05			.0216	.009101
400.00		22950.16	.0234		.009389
432.00	21049.00			.0301	.009673
464.00		20505.33	.0265		.009940
496.00	19944.58			.0210	.010220
528.00		18253.11	.0115		.010497
560.00	17137.40			.0030	.010779
592.00		16279.72	.0007		.011086
624.00	15399.83				
TEMP. AVERAGE STANDARD DEVIATION				.010015	.002832
DET.3 6/20/73					
16.00	46278.86				
48.00		45064.72	.0079		.006675
80.00	43192.25			-.0099	.006822
112.00		40584.76	.0122		.007041
144.00	37218.32			.0296	.007275
176.00		36213.57	.0155		.007460
208.00	34157.85			.0105	.007632
240.00		32900.84	.0244		.007844
272.00	30179.47			.0395	.008058
304.00		29958.48	.0331		.008237
336.00	27833.32			.0256	.008422
368.00		27215.73	.0223		.008620
400.00	25451.94			.0141	.008833
432.00		24483.62	.0199		.009083
464.00	22633.01			.0047	.009389
496.00		21119.12	-.0036		.009723
528.00	19849.48			.0049	.010026
560.00		18839.06	-.0022		.010298
592.00	17958.99			-.0189	.010602
624.00		16485.02			
TEMP. AVERAGE STANDARD DEVIATION				.013766	.002736
DET.4 6/20/73					
0	17291.54				
32.00		15781.61	-.0246		.011187
64.00	15130.39			.0025	.011490
96.00		14579.43	.0100		.011741
128.00	13770.46			.0170	.012000
160.00		13455.23	.0341		.012294
192.00	12280.78			.0504	.012596
224.00		12397.86	.0199		.012764
256.00	12026.81			.0242	.012817
288.00		12244.34	.0441		.012918
320.00	11412.59			.0148	.013189
352.00		10956.91	.0076		.013536
384.00	10360.35			-.0240	.013976
416.00		9337.15	-.0224		.014552
448.00	8801.46			.0224	.014989
480.00		8675.81	.0552		.015385
512.00	7657.46			.0530	.015940
544.00		7514.32	.0243		.016412
576.00	7024.46			.0096	.016833
608.00		6694.33			
TEMP. AVERAGE STANDARD DEVIATION				.016237	.004432

TABLE VI ASYMMETRY OF THE 501 KEV GAMMA RAY

TIME IN MIN.	W(0 D)	W(180D)	W(180D)-AW(0D) / AAW	AW(180D)-W(0D) / AAW	ERROR
DET.1 6/29/73					
16.00	37061.49				
48.00		34898.07	-.0021		.007566
80.00	32996.10			-.0062	.007797
112.00		30815.29	-.0049		.008046
144.00	29060.54			-.0005	.008297
176.00		27376.47	-.0015		.008544
208.00	25867.58			.0046	.008783
240.00		24606.60	.0306		.009072
272.00	22126.13			.0430	.009402
304.00		21631.36	.0295		.009685
336.00	19934.34			.0045	.010005
368.00		18537.19	.0008		.010389
400.00	17210.07			.0310	.010695
432.00		16999.07	.0278		.010921
464.00	15882.98			.0007	.011249
496.00		14862.15	-.0016		.011596
528.00	13950.66			.0100	.011943
560.00		13358.46	.0152		.012282
592.00	12408.19			.0210	.012628
624.00		12019.21	.0179		.012957
656.00	11233.35			.0194	.013278
688.00		10915.06	.0387		.013664
720.00	9815.67			.0314	.014160
752.00		9399.82			
TEMP. AVERAGE STANDARD DEVIATION				.011108	.003027
DET2. 6/29/73					
0		52748.80			
32.00	50655.37			.0018	.006281
64.00		48816.71	.0179		.006429
96.00	45388.43			.0168	.006610
128.00		43639.62	.0107		.006788
160.00	41067.95			.0119	.006958
192.00		39578.33	.0226		.007148
224.00	36457.61			.0120	.007384
256.00		34400.57	-.0024		.007620
288.00	32616.72			-.0040	.007838
320.00		30677.77	-.0087		.008057
352.00	29460.02			-.0167	.008267
384.00		27178.49	-.0077		.008562
416.00	25547.38			.0042	.008839
448.00		24218.46	.0059		.009101
480.00	22689.66			.0082	.009369
512.00		21610.30	-.0018		.009616
544.00	20653.89			-.0072	.009858
576.00		19457.35	-.0000		.010138
608.00	18330.25			.0092	.010421
640.00		17587.96	.0210		.010719
672.00	16142.65			.0294	.011034
704.00		15790.15	.0265		.011328
736.00	14610.92				
TEMP. AVERAGE STANDARD DEVIATION				.006819	.002459
DET.3 6/29/73					
0	54923.75				
32.00		55551.23	.0351		.006052
64.00	52377.43			-.0041	.006186
96.00		48984.66	-.0070		.006378
128.00	46461.87			.0263	.006517
160.00		46444.88	.0454		.006635
192.00	42397.03			.0161	.006840
224.00		39965.26	.0009		.007076
256.00	37606.76			.0086	.007277
288.00		35998.03	.0058		.007464
320.00	34063.85			-.0033	.007669
352.00		32021.62	-.0075		.007888
384.00	30555.19			-.0010	.008092
416.00		29097.35	.0092		.008310
448.00	27206.25			.0265	.008516
480.00		26824.61	.0366		.008712
512.00	24580.46			.0176	.008980
544.00		23331.14	-.0028		.009252
576.00	22271.58			-.0070	.009493
608.00		20962.88	.0186		.009813
640.00	19008.97			.0352	.010165
672.00		18494.25	.0264		.010467
704.00	17068.78			.0187	.010773
736.00		16353.47			
TEMP. AVERAGE STANDARD DEVIATION				.013104	.002340
DET.4.3 6/29/73					
16.00		29804.56			
48.00	28704.17			-.0108	.008370
80.00		27053.50	-.0131		.008570
112.00	26177.17			-.0180	.008780
144.00		24431.51	.0035		.009056
176.00	22643.15			.0127	.009368
208.00		21523.69	.0085		.009660
240.00	20115.62			.0151	.009933
272.00		19377.44	.0228		.010217
304.00	17[illegible]15.08			.0283	.010514
336.00		17367.72	.0230		.010792
368.00	16153.60			.0139	.011088
400.00		15449.29	.0142		.011418
432.00	14361.42			.0057	.011784
464.00		13502.94	-.0161		.012121
496.00	13110.14			.0098	.012321
528.00		12980.05	.0477		.012557
560.00	11681.22			.0537	.012903
592.00		11704.75	.0666		.013280
624.00	10265.49			.0375	.013824
656.00		9703.94	-.0017		.014350
688.00	9203.82			.0132	.014692
720.00		8962.31	.0120		.014983
752.00	8520.66				
TEMP. AVERAGE STANDARD DEVIATION				.011068	.003278

TABLE VI ASYMMETRY OF THE 501 KEV GAMMA RAY

TIME IN MIN.	W(0 D)	W(180D)	W(180D)-AW(0D) / AAW	AW(180D)-W(0D) / AAW		ERROR
DET.1 10/2/73						
0	15809.83					
32.00		15777.52	.0302			.011342
64.00	14821.37			.0324	.011520	
96.00		14856.62	.0254			.011675
128.00	14154.75			.0143	.011844	
160.00		13877.67	.0070			.012026
192.00	13418.00			.0054	.012192	
224.00		13115.08	.0137			.012391
256.00	12472.32			.0237	.012587	
288.00		12437.63	.0151			.012728
320.00	12034.19			-.0004	.012893	
352.00		11634.64	-.0009			.013108
384.00	11268.49			-.0013	.013327	
416.00		10885.51	-.0070			.013531
448.00	10662.82			.0038	.013682	
480.00		10524.46	.0294			.013885
512.00	9794.22					
TEMP. AVERAGE STANDARD DEVIATION				.012704		.004696
DET.2 10/2/73						
0		15022.79				
32.00	14410.06			.0035	.011771	
64.00		13920.66	.0128			.012024
96.00	13107.43			.0352	.012241	
128.00		13241.80	.0357			.012397
160.00	12454.59			.0235	.012596	
192.00		12279.04	.0034			.012773
224.00	12023.21			-.0028	.012906	
256.00		11707.61	-.0029			.013061
288.00	11465.85			-.0096	.013239	
320.00		11015.83	-.0033			.013463
352.00	10652.66			.0203	.013632	
384.00		10728.80	.0331			.013764
416.00	10113.92			.0155	.014007	
448.00		9835.34	.0146			.014312
480.00	9289.22			.0657	.040137	
512.00		9379.22				
TEMP. AVERAGE STANDARD DEVIATION				.012931		.004895

TABLE VII ASYMMETRY OF 444 KEV

TIME IN MIN.	W(0 D)	W(180D)	W(180D)-AW(0D) / AAW	AW(180D)-W(0D) / AAW	ERROR
DET.1 6/4/73					
16.00	213384.82				
48.00		202710.84	-.0047		.003137
80.00	193958.55			-.0003	.003211
112.00		185104.44	-.0036		.003284
144.00	177580.03			.0012	.003355
176.00		170474.51	-.0006		.003425
208.00	163589.33			.0013	.003495
240.00		157143.90	.0011		.003569
272.00	150342.45			.0026	.003645
304.00		144333.45	.0024		.003725
336.00	137643.52			.0022	.003810
368.00		131569.24	.0009		.003900
400.00	125252.74			.0005	.003995
432.00		119068.63	-.0026		.004096
464.00	113502.06			.0035	.004194
496.00		108736.90	.0038		.004293
528.00	103140.43			.0053	.004398
560.00		98632.17	.0061		.004510
592.00	92925.13			.0023	.004637
624.00		87652.98	-.0059		.004770
656.00	83415.03			.0040	.004892
688.00		79849.04	-.0100		.004992
720.00	77890.55				
TEMP. AVERAGE STANDARD DEVIATION				.000461	.000875
DET.2 6/4/73					
0	170119.73				
32.00		163451.28	.0026		.003500
64.00	155933.89			.0001	.003581
96.00		148438.53	-.0022		.003669
128.00	141582.95			.0024	.003756
160.00		135411.17	-.0043		.003839
192.00	130408.36			-.0045	.003921
224.00		124243.60	-.0080		.004004
256.00	120069.17			-.0015	.004083
288.00		115529.11	.0055		.004166
320.00	109715.56			.0066	.004262
352.00		105350.77	.0060		.004364
384.00	99734.78			.0062	.004471
416.00		95369.16	.0013		.004581
448.00	90764.08			-.0004	.004695
480.00		86086.61	-.0002		.004820
512.00	81438.50			.0069	.004947
544.00		77919.31	-.0016		.005064
576.00	74644.83			-.0107	.005190
608.00		69775.75	-.0093		.005341
640.00	66210.98			.0017	.005494
672.00		62867.61	-.0004		.005640
704.00	59570.51				
TEMP. AVERAGE STANDARD DEVIATION				-.000178	.000980
DET.3 6/4/73					
16.00		175869.25			
48.00	168941.77			.0034	.003438
80.00		163181.70	.0001		.003501
112.00	157385.96			-.0040	.003568
144.00		150328.58	-.0081		.003640
176.00	145715.32			-.0027	.003707
208.00		140302.89	-.0016		.003774
240.00	135351.65			-.0026	.003846
272.00		129696.64	.0003		.003927
304.00	123972.75			.0027	.004014
336.00		118919.36	.0017		.004103
368.00	113452.00			.0021	.004196
400.00		108464.06	-.0019		.004292
432.00	103889.64			-.0046	.004393
464.00		98363.83	-.0074		.004501
496.00	94293.74			-.0014	.004607
528.00		89960.32	.0004		.004716
560.00	85552.06			.0043	.004830
592.00		81884.09	-.0005		.004941
624.00	78303.83			-.0018	.005056
656.00		74435.45	.0001		.005184
688.00	70547.76			.0335	.014807
720.00		69064.82			
TEMP. AVERAGE STANDARD DEVIATION				.000572	.001147
DET.4 6/4/73					
0		180119.55			
32.00	175566.81			-.0059	.003380
64.00		168945.91	-.0032		.003438
96.00	163407.12			-.0008	.003499
128.00		157619.24	-.0024		.003560
160.00	152600.05			.0005	.003620
192.00		147730.35	-.0004		.003679
224.00	142975.06			-.0025	.003742
256.00		137514.65	-.0015		.003812
288.00	132466.97			.0024	.003883
320.00		128058.17	-.0008		.003951
352.00	123866.21			-.0079	.004026
384.00		117734.91	-.0072		.004114
416.00	113304.29			.0010	.004200
448.00		109096.32	.0074		.004290
480.00	103282.61			.0072	.004393
512.00		98967.16	-.0002		.004495
544.00	94683.78			.0014	.004594
576.00		90664.90	.0021		.004699
608.00	86268.39			-.0021	.004817
640.00		81504.62	-.0103		.004941
672.00	78429.62			-.0219	.014440
704.00		73651.81			
TEMP. AVERAGE STANDARD DEVIATION				-.002149	.001109

mixing ratio are G_1 and G_3 (see p. 16). The uncertainty introduced in determining the parity mixing ratio due to the uncertainty in G_3 is small because G_3 is multiplied by B_3A_3 and this latter quantity is only 11. % of B_1A_1 at temperature in the range 20-30 mK. The high value of G_2 and G_4 we used ensures that G_1 is nearly equal to 1. So the uncertainty due to G_1 is also small. Averaging all the available experimental data, we get the mixing ratio equal to -0.0290(19). This value is lower than all the previous experimental results which are listed in Table VIII. The error we quote is simply statistical in nature.

7. Summary of the results. The following things were checked or tried:

a) Radiation damage due to the recoil energy from thermal neutron capture is negligible in the metallic system.

b) Crystal imperfection introduced by neutron capture and/or mechanical stress cannot be detected.

c) Magnetic saturation on the sample was checked in higher magnetic fields. The instability of the power supply makes the experiment very difficult, but one still can show the magnetic field we used actually saturated the sample.

d) A 4 counter and a 2 counter system were set up to check any systematic asymmetry. No such effect can be deduced within our experimental accuracy.

Table IX summarizes all the relevant experiments. Column 3 lists roughly the geometry of the sample before soft soldering. Column 4 lists the internal temperature based on the 444 keV gamma transition of ^{180m}Hf. Column 5 specifies whether the sample was prepared before the thermal

Table VIII. Asymmetry and Mixing Ratio

Date (Ave. Temp.)	Ser. No.	Distance	Orientation	Asymmetry and Temp. Range	Mixing Ratio* $-\varepsilon$
	112-C	21.6 cm	270°	17.75-29.20 mK	.0464(59)[a]
# 6/4/73	3068-C	20.1	0°	16.30-28.00 mK	.0378(68)[b]
	68-B	10.2	90°	15.35-28.00 mK	.0464(64)[b]
	239A-C	11.4	180°	15.35-27.20 mK	.0252(63)[b]
	112-C	29.5	180°	.015976(3957) 16.5 mK	.0279(75)[a]
6/20/73 (16.4 mK)	102-6	10.8	270°	.010015(2832) 16.0 mK	.0184(52)[b]
	68-B	11.5	90°	.013766(2736) 16.0 mK	.0252(50)[b]
	239A-C	13.4	0°	.016237(4432) 16.55 mK	.0296(81)[b]
	112-C	27.1	270°	.011108(3027) 23.4 mK	.0244(67)[a]
6/29/73 (22.0 mK)	102-6	9.6	180°	.006819(2459) 20.9 mK	.0151(55)[b]
	68-B	11.9	0°	.013104(2340) 19.5 mK	.0290(52)[b]
	239A-C	13.5	90°	.011068(3278) 22.6 mK	.0244(73)[b]
	112-C	17.1	270°	.012704(4696) 16.2-18.3 mK	.0281(89)[a]
10/2/73 (17.35 mK)	102-6	9.1	90°	.012931(4895) 16.2-18.7 mK	.0283(92)[b]

This experiment	0.0290(19)
Krane *et al.*, Phys. Rev. C *4*, 1906 (1971)	0.038 (4)
Jenschke *et al.*, Phys. Letters *31B*, 65 (1970)	0.041 (7)
Lipson *et al.*, Phys. Letters *35B*, 307 (1971)	0.033 (9)

*The solid angle correction used for a,b,c are listed in the following:

(continued)

Table VIII (continued)

	G_1	G_2	G_3	G_4
a	1.0000	0.9920	0.9900	0.9800
b	0.9990	0.9852	0.9680	0.9512

#The parity mixing ratio of this experiment is evaluated from each experimental point as described in the text.

Table IX. Summary

Date	No. of Detectors Being Used	a/b ratio	Temperature (mK)	Compound Made Before or After Neutron Capture	Anneal
6/4/73	4	.034/.211	16.8-28.0	before	no
6/5/73	4	.034/.211	16.4-34.1	before	no
6/20/73	4	.022/.189	18.	before	no
6/29/73	4	.0205/.238	25.	before	no
7/4/73	4	^{60}Co(Fe)	10.	—	—
9/26/73	2	.0205/.238	16.0-32.0	before	no
10/2/73	2	.0205/.238	17.3-28.7	before	no
11/1/73	2	.025/.257	29. -33.	before	yes
11/8/73	2	.034/.254	29. -37.	after	no
11/13/73	2	.025/.223	22.0-24.2	after	no
11/15/73	2	—	27.1-38.0	after	no

neutron capture or after. The sample used in the experiments of 9/26/73 and 10/2/73 was the old sample from 6/29/73; the surface of the sample was just cleaned and it was sent into the reactor again.

II. Discussion

The asymmetry is unambiguously observed in the 501 keV gamma transition of ^{180m}Hf. The optimum experimental situation can be reached, if the following things can be achieved:

A. About Detectors

Removing the electronic blockage will be the major improvement of this experiment. Detectors to be used in this experiment must be able to tolerate high counting rate situations without degrading the efficiency of the detector.

B. About the Polarizing Magnet

Three things can be done with respect to the magnet:

1. Ripple from the output of the power supply must be eliminated. The amplifier of the D.C. power supply is in resonance with the inductance of the polarizing magnet. At higher current outputs the ripple amplitude and frequency was so high that it actually drove the superconducting magnet normal. Worst of all it almost always heated up the sample by eddy current heating.

2. Modify the linear ramp into sinusoidal ramp. This modification will further lessen the eddy current heating from rotating the magnetic field. The experiments show that it is not essential but it is nice.

3. Set the polarizing magnet in 4°K instead of 1°K. The advantage of this will be discussed in the next section.

C. About the Cryostat

The tail section of the cryostat is so small (1/2" O.D.) in space, that one cannot have confidence that the sample will not touch the inner wall of the tail section. The tail section will certainly be at 1°K. The smallness of the tail section is dictated by the polarizing magnet which is inside the 1°K bath. In order to put the polarizing magnet in the 4°K bath, two ways can be used to solve the problem, but both involve major work.

1) Change the inner wall of 4°K bath to make room for the polarizing magnet to get in.

2) Keep the same dewar and wind a magnet with bigger wire to allow higher current, say 50-100 amperes so that the magnet can be made small enough to fix into the present dewar. To wind a new magnet is not too difficult.

REFERENCES

1. C. S. Wu, E. Ambler, R. W. Hayward, D. D. Hoppes, and R. P. Hudson, Phys. Rev. Letters 105, 1413 (1957).
2. R. P. Feynman and M. Gell-Mann, Phys. Rev. 109, 193 (1958).
3. R. J. Blin-Stoyle, Phys. Rev. 118, 1605 (1960); 120, 181 (1960).
4. D. H. Wilkinson, Phys. Rev. 109, 1603 (1958).
5. N. Tanner, Phys. Rev. 107, 1203 (1957).
6. R. E. Segel, J. W. Oleness, and E. L. Sprenkel, Phys. Rev. 123, 1382 (1961).
7. D. E. Alburger, R. E. Pixley, D. H. Wilkinson, and P. Donovan, Phil. Mag. 6, 171 (1961).
8. W. Kaufmann and H. Waffer, Nucl. Phys. 24, 62 (1961).
9. D. P. Boyd, P. E. Donovan, B. Marsh, D. E. Alburger, D. H. Wilkinson, P. Assimakopolos, and E. Beardsworth, Bull. Am. Phys. Soc. 13, 1424 (1968).
10. R. E. Segel, Bull. Am. Phys. Soc. 14, 565 (1969). E. L. Sprenkel-Segel, R. E. Segel, and R. H. Siemssen, "Parity Mixing in ^{16}O", in 3rd Int. Conf. on High Energy Phys. and Nucl. Structure, New York (1969), pp. 763-765.
11. H. Hattig, K. Hunchen, P. Roth, and H. Waffer, Nucl. Phys. A137, 144 (1969); Phys. Rev. Letters 25, 941 (1970).
12. C. M. Jones, J. L. C. Ford, and Felis E. Obenshain, Phys. Rev. C 2, 2113 (1970).
13. R. J. Blin-Stoyle and M. A. Grace, "Oriented Nuclei", in Handbuch der Physik, Springer-Verlag, Berlin, Vol. 42 (1957), p. 556.

14. D. A. Shirley, "Thermal Equilibrium Nucl. Orientation", in Ann. Rev. Nucl. Sci. 16, 89 (1966).

15. C. D. Jefferies, Dynamic Nucl. Orientation, New York, Interscience Publishers (1963).

16. R. Haas, L. B. Leipuner, and R. K. Adair, Phys. Rev. 116, 1221 (1959).

17. Yu. G. P. A. Kropchisky and Yu. A. Oralovsky, Phys. Letters 12, 25 (1965); J. Nucl. Phys. (USSR) 1, 479 (1965).

18. K. Abrahams, W. Ratynski, F. S. Rasmussen, and E. Warming, "Parity Non-Conserving Internucleon Potentials Studies by the (n,gamma) Reaction", in Proc. Karlsruhe Conf. on Pol. Phen. Birkhauser, Basel (1965); Phys. Letters 25B, 200 (1967); 29B, 564 (1969).

19. M. Forte and O. Saavedra, "Investigation of PNC Effects in the Radiative Capture of Polarized Neutrons: The Case of ^{2}H(n,gamma) and ^{113}Cd(n,gamma)", in Nuclear Struct. Study with Neutrons, Amsterdam (1965).

20. Yu. G. Abov, P. A. Krmpchitsky, M. I. Bulgakov, O. N. Yermakov, and I. L. Karpikhin, Phys. Letters 27B, 16 (1968).

21. M. K. Simmons, "Parity Violation in ^{203}Tl and Resonance Trapping of 0 Optical Radiation", Ph.D. Thesis, LBL-1337, November 1972.

22. G. A. Westenbarger, "Polarization of Silver Nuclei in Ferromagnets and the Internal Magnetic Field", Ph.D. Thesis, UCRL-11143 (1963).

23. A. J. Freeman, R. B. Frenkel, Hyperfine Interaction, Academic Press, New York-London (1967), Chapter 2,9,S.9.

24. T. A. Koster and D. A. Shirley, "Table of Hyperfine Fields", UCRL-20411, November 1970.

25. K. Siegbahn, Alpha-, Beta-, and Gamma-Ray Spectroscopy, North-Holland Publishing Company, Amsterdam, Vol. 2 (1966), Chapter XIX.

26. F. Boehm and U. Hauser, Nucl. Phys. 14, 615 (1960).

27. F. Dydak and H. Woda, Acta. Phys. Austr. 23, 204 (1966).

28. W. D. Hamilton, Prog. Nucl. Phys. 10, 1 (1968).

29. E. M. Henley, Ann. Rev. Nucl. Sci. 19, 367 (1969).

30. R. J. Blin-Stoyle, Fundamental Interactions and the Nucleus, North-Holland Publishing Company, Amsterdam (1973), pp. 192-195.

31. W. P. Pratt, Jr., R. I. Schermer, J. R. Sites, and W. A. Steyert, Phys. Rev. C 2, 1499 (1970).

32. E. D. Lipson, F. Boehm, and J. C. Vanderleeden, Phys. Letters 35B, 307 (1971).

33. K. S. Krane, C. E. Olsen, J. R. Sites, and W. A. Steyert, Phys. Rev. Letters 26, 1579 (1971); Phys. Rev. C 4, 1906 (1971).

34. P. Bock, B. Jenschke, and H. Schopper, Phys. Letters 22, 316 (1966); B. Jens, B. Jenschke, and P. Bock, Phys. Letters 31B, 65 (1970).

35. H. Blumberg, K. H. Speidel, H. Schlenz, R. L. Rasera, and E. Bodenstedt, Phys. Letters 22, 328 (1966).

36. E. Kuphal, Z. Phys. 253, 314 (1972).

37. J. H. Christenson, J. W. Cronin, V. L. Fitch, and R. Turlay, Phys. Rev. Letters 13, 138 (1964).

38. E. Fermi, Nuovo Cimento 11, 1 (1934).

39. G. Bernardini, "Weak Interaction", Proceeding of International School of Physics, Enrico Fermi, Course XXXII, Weak Interaction and High Energy Neutrino Physics, Academic Press, p. 2.

40. C. S. Wu, "Beta Decay", Proceeding of International School of Physics, Enrico Fermi, Course XXXII, Weak Interaction and High Energy Neutrino Physics, Academic Press, pp. 52-95.

41. H. F. Stier, etc., CERN Courier 10, 1 (1973).

42. G. B. L. in News, Phys. Today 26, 17 (1973).

43. N. Cabibbo, Phys. Rev. Letters 10, 531 (1963).

44. M. Ferentz and N. Rosenzweig, "Table of F. Coefficients", Argonne National Laboratory Report ANL-5324 (1955).

45. E. Fischbuch and D. Tadic, Phys. Report 6C, 125 (1973).

46. M. Gari, Phys. Report 6C, 319 (1973).

47. S. T. C. Hung, "Beta Asymmetry From Oriented Manganese 52", Ph.D. Thesis, LBL-1256.

48. C. J. Gallagher, Jr., M. Jorgensen, and O. Skibreid, Nucl. Phys. 23, 285 (1961).

49. J. Burde, R. M. Diamond, and F. S. Stephens, Izv. Akad. Nauk. SSS, Ser. FIZ. 31, 21 (1967); Phys. Rev. Letters 12, 255 (1964); Nucl. Phys. 63, 82 (1965).

50. Ben R. Mottelson and S. G. Nilsson, Mat. Fys. Skr. Dan. Selsk. 1, no. 8 (1959), pp. 42-43.

51. V. W. Cohn, Nuclear Data Sheets, compiled by K. Way et al., Printing and Publishing Office, National Academy of Sciences - National Research Council, Washington, D. C. (1969), p. 433.

52. C. Sauer, E. Matthias, and R. L. Mössbauer, Phys. Rev. Letters 21, 961 (1968).

53. G. Kaindl and D. Salomon, Phys. Letters 32B, 364 (1970).

54. H. J. Korner, F. E. Wagner, and B. D. Dunlap, Phys. Rev. Letters 27B, 1593 (1971).

55. E. Bodenstedt, H. J. Körner, E. Gerden, J. Radeloff, C. Gunther, and G. Struble, Z. Phys. 165, 57 (1961).

56. R. E. Snyder, J. W. Ross, and D. ST. P. Bunbury, J. Phys. (Proc. Phys. Soc.) 1, 1662 (1968).

57. John Barclay, "Spin-Lattice Relaxation by Nuclear Magnetic Resonance on Oriented Nuclei", Ph.D. Thesis, UCRL-18986 (1969), p. 92.

58. K. S. Krane, C. E. Olsen, and W. A. Steyert, "Parity-Violating and Normal Multipole Mixing Ratio of the 57 keV Gamma Transition of ^{180m}Hf", Los Alamos Scientific Laboratory Report LA-DC-72-16; Phys. Rev. C 5, 1663 (1972).

59. P. Steiner, E. Gerdan, and D. Steenken, Proc. Roy. Soc. A311, 177 (1969).

60. D. E. Murnick and S. Hufner, Z. Phys. 226, 175 (1969).

61. F. N. Rhines and R. W. Gould, Adv. in X-Ray 6, 62 (1962).

62. V. N. Srechrikov et al., Russ. Journal of Inorg. 8, 1106 (1963)

63. B. I. Deutch and K. B. Nielsen, Rev. of PAC: Hyperfine Studies with Implanted Source in Radioactivity in Nuclear Spectroscopy, ed. by J. H. Hamilton and J. C. Manthuruthil, Gordon and Breach, Science Publishers, New York (1972), p. 1087; Proc. Roy. Soc. A311, 1504 (1969).

APPENDIX I

GAMMA MATRICES AND INTERACTIONS

I. Interactions

Interactions can be described in terms of their degree of freedom.

Interaction	Degrees of Freedom	Symbol	Interaction Matrix
Scalar	1	S	$\bar{\psi} \cdot \psi$
Pseudoscalar	1	P	$\bar{\psi} \cdot \gamma_5 \cdot \psi$
Vector	4	V	$\bar{\psi}\, \gamma_\alpha\, \psi$
Axial Vector	4	A	$\bar{\psi}\, \gamma_\alpha \cdot \gamma_5\, \psi$
Tensor	6	T	$\bar{\psi}\, \sigma_{\alpha\beta}\, \psi$

In 4-dimensional phase space, we have 16 degree of freedom. If we sum up all the dimensions in column 2, we do get 16 degree of freedom. Here ψ are annihilation operators, $\bar{\psi}$ are creation operators, $\sigma_{\alpha\beta}$ are antisymmetry tensor.

$$\bar{\psi} = \psi^{\dagger} \cdot \gamma_4 = (\psi_1^*, \psi_2^*, -\psi_3^*, -\psi_4^*)$$

$$\psi = \begin{pmatrix} \psi_1 \\ \psi_2 \\ \psi_3 \\ \psi_4 \end{pmatrix}$$

$$\sigma_{\alpha\beta} = \frac{1}{2} (\gamma_\alpha \cdot \gamma_\beta - \gamma_\beta\, \gamma_\alpha)$$

II. Gamma Matrices

Gamma matrices are the solutions of the Dirac equation. They are normalized and satisfy the commutation relation:

$$\gamma_\mu \gamma_\nu + \gamma_\nu \gamma_\mu = [\gamma_\mu, \gamma_\nu]_+ = 0 \qquad \mu \neq \nu \quad , \quad \mu,\nu = 1,2,3,4$$

$$\gamma_\mu^{\,2} = 1 \quad .$$

The simplest forms are:

$$\gamma_1 = \begin{pmatrix} 0 & \sigma_1 \\ -\sigma_1 & 0 \end{pmatrix} = \begin{pmatrix} 0 & 0 & 0 & 1 \\ 0 & 0 & 1 & 0 \\ 0 & -1 & 0 & 0 \\ -1 & 0 & 0 & 0 \end{pmatrix}$$

$$\gamma_2 = \begin{pmatrix} 0 & \sigma_2 \\ -\sigma_2 & 0 \end{pmatrix} = \begin{pmatrix} 0 & 0 & 0 & -i \\ 0 & 0 & i & 0 \\ 0 & i & 0 & 0 \\ -i & 0 & 0 & 0 \end{pmatrix}$$

$$\gamma_3 = \begin{pmatrix} 0 & \sigma_3 \\ -\sigma_3 & 0 \end{pmatrix} = \begin{pmatrix} 0 & 0 & 1 & 0 \\ 0 & 0 & 0 & -1 \\ -1 & 0 & 0 & 0 \\ 0 & 1 & 0 & 0 \end{pmatrix}$$

$$\gamma_4 = \begin{pmatrix} I & 0 \\ 0 & -I \end{pmatrix} = \begin{pmatrix} 1 & 0 & 0 & 0 \\ 0 & 1 & 0 & 0 \\ 0 & 0 & -1 & 0 \\ 0 & 0 & 0 & -1 \end{pmatrix}$$

$$\gamma_5 = i\,\gamma_1 \cdot \gamma_2 \cdot \gamma_3 \cdot \gamma_4 = -\begin{pmatrix} 0 & 0 & 1 & 0 \\ 0 & 0 & 0 & 1 \\ 1 & 0 & 0 & 0 \\ 0 & 1 & 0 & 0 \end{pmatrix}$$

APPENDIX II

ANISOTROPY OF 444 keV AND ASYMMETRY OF 501 keV GAMMA TRANSITION FROM POLARIZED ^{180m}Hf

I. Anisotropy of 444 keV

The anisotropy of 444 keV from polarized ^{180m}Hf in $ZrFe_2$ lattice is calculated under the following assumptions:

1) 57 keV 8- to 8+ transition is pure E1

2) 444 keV 8+ to 6+ is pure E2

Then we get the following values as input data for computation.

magnetic hyperfine splitting	UH	-8.68686×10^{-18} erg
reorientation parameter	U(2)	0.95833
	U(4)	0.86111
angular distribution parameter, F_k	F(2,1)	-0.38132
	F(4,1)	-0.17271
solid angle correction	G(2)	0.992; 0.9852; 0.9725
	G(4)	0.980; 0.9512; 0.9110

Three geometries have been used.

The results with the listing of the FORTRAN program are presented in the following pages.

II. Asymmetry of 501 keV

The asymmetry of 501 keV transition from polarized ^{180m}Hf in $ZrFe_2$ lattice can be calculated with known parity mixing ratio. In order to simplify the program handling, we absorb the parity mixing ratio into the solid angle correction terms, G_k and take these as parameters.

```
      PROGRAM ANIT4(INPUT,OUTPUT)
      DIMENSION ID(4)
      DIMENSION Y(3)
      DIMENSION PAR(10),DPAR(10)
      DIMENSION  J(4),A(4,3)
      COMMON/PARIN/J,S,A,JH,IDE
C
C     PAR(1)=G(1)   SOLID ANGLE CCORECTION COEFFICIENT
C     PAR(2)=G(2)   SOLID ANGLE CCORECTION COEFFICIENT
C     PAR(3)=G(3)   SOLID ANGLE CCORECTION COEFFICIENT
C     PAR(4)=G(4)   SOLID ANGLE CCORECTION COEFFICIENT
C     PAR(5)=ACTO   ACTIVITY AT TIME 0
C     PAR(6)=RATIO MIXING RATIO OF GAMMA RAY ONE LOOKING AT
C     PAR(7)=H_L     HALF LIFE OF ISOMERIC STATE IN HOURS
C     PAR(8)=TEMPI  INITIAL TEMPERATURE AFTER DEMAGNETIZATION
C     PAR(9)=S_DPI  RATE OF TEMPERATURE RAISE AFTER DEMAGNETIZATION
C     PAR(10)=BACK
C
C
C     F1(L,L↓)=F1COEFF. OF GAMMA RAY L AND L↓
C     A(1,1)=F1(1,1), A(1,2)=F1(1,2), A(1,3)=F1(2,2)
C     A(2,1)=F2(1,1), A(2,2)=F2(1,2), A(2,3)=F2(2,2)
C     A(3,1)=F3(1,1), A(3,2)=F3(1,2), A(3,3)=F3(2,2)
C     A(4,1)=F4(1,1), A(4,2)=F4(1,2), A(4,3)=F4(2,2)
C
    9 FORMAT(2F10.5)
   10 FORMAT(F10.5)
   11 FORMAT(10X,49HTEMP IN K    W( 0D)    W( 90D)    DY          AY      ,
     12X,9HANISTROPY,2X,10HANISTROPY1//)
   12 FORMAT(10X,F10.5,F10.5,F10.5 F10.5,F10.5,F10.5,F10.5)
   13 FORMAT(/// 5X,10HPAR(2)=    ,F10.5,5X,10HPAR(4)=    ,F10.5//)
   14 FORMAT(4A10)
   15 FORMAT(1H1,5X,4A10)
  100 FORMAT(8F10.5)
  101 FORMAT(4F10.5)
  102 FORMAT(F10.2,F20.10)
  103 FORMAT(5X,20H *** ERROR IN THEORY)
      J=-1
      X=0.0
      READ 101, (J(I),I=1,4)
      READ 102, S,JH
      READ 100, ((A(I,J),J=1,3),I=1,4)
      PAR(1)=0.0
      PAR(3)=0.0
      PAR(5)=1.0
      PAR(6)=0.0
      PAR(7)=5.5
      PAR(9)=0.0
      PAR(10)=0.0
      READ 10, TT
      DO 999 K=1,3
      READ 14, ID
      READ 9, PAR(2),PAR(4)
      PRINT 15, ID
      PRINT 13, PAR(2),PAR(4)
      PRINT 11
      DO 1 I=1,100
      AI=FLOAT(I)-1.
```

```
      PAR(8)=TI+AI*0.001
      DO 2 IDE=1,2
      CALL THEORY(J,X,PAR,Y(IDE),DPAR)
    2 CONTINUE
      DY=Y(2)-Y(1)
      AY=Y(2)+Y(1)
      AN=DY/Y(1)
      ANI=2.*DY/AY
      PRINT 12, PAR(8),Y(1),Y(2),DY,AY,AN,ANI
    1 CONTINUE
      GO TO 999
  998 PRINT 103
  999 CONTINUE
      END
* CAUTION - STATEMENT NUMBER 998 NEVER USED
```

```
      SUBROUTINE THEORY(J,X,PAR,F,DPAR)
      REAL LN2,LT
      DIMENSION P1(4),P2(4),P3(4),P4(4)
      DIMENSION PAR(10),DPAR(10)
      DIMENSION G(4),J(4),A(4,3)
      COMMON/PARIN/U,S,A,JH,IDE
C
C     P1(IDE)=COS(IDE-1)*90
C     P2(IDE)=0.5*(3*(COS((IDE-1)*90))**2-1.)
C     P3(IDE)=0.5*(5.*(COS((N-1)*90))**3-3*COS(N-1)*90
C     P4(IDE)=0.125*(35.*((COS((N-1)*90))**4-3*(COS((N-1)*90))**2+3)
C     N=IDE
C
      P1(1)=1.
      P1(2)=0.
      P1(3)=-1.
      P1(4)=0.
      P2(1)=1.
      P2(2)=-0.5
      P2(3)=1.
      P2(4)=-0.5
      P3(1)=1.
      P3(2)=0.
      P3(3)=-1.
      P3(4)=0.
      P4(1)=1.
      P4(2)=0.375
      P4(3)=1.
      P4(4)=0.375
      G(1)=PAR(1)
      G(2)=PAR(2)
      G(3)=PAR(3)
      G(4)=PAR(4)
      ACTO=PAR(5)
      RATIO=PAR(6)
      HL=PAR(7)
      TEMP=PAR(8)
      SLOP=PAR(9)
      BACK=PAR(10)
      A1=(A(1,1)+1.*RATIO*A(1,2)+RATIO**2*A(1,3))/(1.+RATIO**2)
- MULTIPLY OR DIVIDE BY 1

      A2=(A(2,1)+2.*RATIO*A(2,2)+RATIO**2*A(2,3))/(1.+RATIO**2)
      A3=(A(3,1)+3.*RATIO*A(3,2)+RATIO**2*A(3,3))/(1.+RATIO**2)
- MULTIPLY OR DIVIDE BY 1

      A4=(A(4,1)+2.*RATIO*A(4,2)+RATIO**2*A(4,3))/(1.+RATIO**2)
      BETA=1./(138.0*TEMP*S)
      BETA1=BETA/(1.+SLOP*X)
      B=JH*BETA1
      C1=SQRT(3./((S+1.)*S))
      C2=3.*SQRT(5./(S*(S+1.)*(2.*S-1.)*(2.*S+3.)))
      C3=5.*SQRT(7./((S+2.)*(2.*S+3.)*(S+1.)*S*(2.*S-1.)*(S-1.)))
      F1=1.
      L=2.*S-4.
      DO 1 I=1,L
      F1=F1*I
    1 CONTINUE
- IS ONE STATEMENT DO WITH OUT PARENTHSIS GROUP CORRECT
```

```
      F2=1.
      L=2.*S+5.
      DO 2 I=1,L
      F2=F2*I
    2 CONTINUE
- IS ONE STATEMENT DO WITH OUT PARENTHSIS GROUP CORRECT

      IF(S-2.) 3,3,4
    4 C4=SQRT(( 2.*S+1.)*F1/F2)
      GO TO 5
    3 C4=0.
    5 S0=0.
      S1=0.
      S2=0.
      S3=0.
      S4=0.
      S5=0.
      S11=0.
      S21=0.
      S31=0.
      S41=0.
      S51=0.
      NL=2.*S+1.
      DO 6 K=1,NL
      AM=K-1.-S
      EX=EXP(-AM*B)
      S0=S0+EX
      S1=S1+AM*EX
      S2=S2+AM**2*EX
      S3=S3+AM**3*EX
      S4=S4+AM**4*EX
      S5=S5+AM**5*EX
      AMX=(-AM)*EX
      S11=S11+AMX
      S21=S21+AM*AMX
      S31=S31+AM**2*AMX
      S41=S41+AM**3*AMX
      S51=S51+AM**4*AMX
    6 CONTINUE
      B1=C1*S1/S0
      B2=C2*(S2/S0-S*(S+1.)/3.)
      B3=C3*(S3/S0-0.2*(3.*S**2+3.*S-1.)*S1/S0)
      B4=C4*(210.*S4/S0-30.*(6.*S**2+6.*S-5.)*S2/S0+18.*S*(S-1.)*(S+1.)
     1(S+2))
      LN2=ALOG(2.)
      LT=HL*60./LN2
      T=X/LT
      E=EXP(-T)
      F0=(1.+A1*B1*G(1)*U(1)*P1(IDE)+
     1       A2*B2*G(2)*U(2)*P2(IDE)+
     2       A3*B3*G(3)*U(3)*P3(IDE)+
     3       A4*B4*G(4)*U(4)*P4(IDE))*ACTO*E
      F=F0+BACK
      IF(J) 10,11,11
   11 CONTINUE
C
C     DERIVATIVE OF F
C
```

```
      DPAR(1)=A1*B1*U(1)*P1(IDE)*ACTO*E
      DPAR(2)=A2*B2*U(2)*P2(IDE)*ACTO*E
      DPAR(3)=A3*B3*U(3)*P3(IDE)*ACTO*E
      DPAR(4)=A4*B4*U(4)*P4(IDE)*ACTO*E
      DPAR(5)=(1.+A1*B1*G(1)*U(1)*P1(IDE)+
     1          A2*B2*G(2)*U(2)*P2(IDE)+
     2          A3*B3*G(3)*U(3)*P3(IDE)+
     4          A4*B4*G(4)*U(4)*P4(IDE))*E
      DA1=2.*(-RATIO*A(1,1)+(1.-RATIO**2)*A(1,2)+RATIO*A(1,3))
      DA2=2.*(-RATIO*A(2,1)+(1.-RATIO**2)*A(2,2)+RATIO*A(2,3))
      DA3=2.*(-RATIO*A(3,1)+(1.-RATIO**2)*A(3,2)+RATIO*A(3,3))
      DA4=2.*(-RATIO*A(4,1)+(1.-RATIO**2)*A(4,2)+RATIO*A(4,3))
      DPAR(6)=(DA1*B1*G(1)*U(1)*P1(IDE)+
     1         DA2*B2*G(2)*U(2)*P2(IDE)+
     2         DA3*B3*G(3)*U(3)*P3(IDE)+
     3         DA4*B4*G(4)*U(4)*P4(IDE))*ACTO*E/(1.+RATIO**2)**2
      DPAR(7)=(T/HL)*FO
      C3F=0.2*(3.*S**2+3.*S-1.)
      C4F=30.*(6.*S**2+6.*S-5.)
      DBT=-B/TEMP
      DS0T=S11*DBT
      DS1T=S21*DBT
      DS2T=S31*DBT
      DS3T=S41*DBT
      DS4T=S51*DBT
      DB1T=C1*(S0*DS1T-S1*DS0T)/S0**2
      DB2T=C2*(S0*DS2T-S2*DS0T)/S0**2
      DB3T=C3*((S0*DS3T-S3*DS0T)/S0**2-C3F*DB1T/C1)
      DB4T=C4* (210.*(S0*DS4T-S4*DS0T)/S0**2-C4F*DB2T/C2)
      DPAR(8)=(A1*DB1T*G(1)*U(1)*P1(IDE)+
     1         A2*DB2T*G(2)*U(2)*P2(IDE)+
     2         A3*DB3T*G(3)*U(3)*P3(IDE)+
     3         A4*DB4T*G(4)*U(4)*P4(IDE))*ACTO*E
      SS=(1.+SLOP*X)
      DBS=-B*X/SS
      DS0S=S11*DBS
      DS1S=S21*DBS
      DS2S=S31*DBS
      DS3S=S41*DBS
      DS4S=S51*DBS
      DB1S=C1*(S0*DS1S-S1*DS0S)/S0**2
      DB2S=C2*(S0*DS2S-S2*DS0S)/S0**2
      DB3S=C3*((S0*DS3S-S3*DS0S)/S0**2-C3F*DB1S/C1)
      DB4S=C4*( 210.*(S0*DS4S-S4*DS0S)/S0**2-C4F*DB2S/C2)
      DPAR(9)=(A1*DB1S*G(1)*U(1)*P1(IDE)+
     1         A2*DB2S*G(2)*U(2)*P2(IDE)+
     2         A3*DB3S*G(3)*U(3)*P3(IDE)+
     3         A4*DB4S*G(4)*U(4)*P4(IDE))*ACTO*E
      DPAR(10)=1.
   10 CONTINUE
      RETURN
      END
```

7 CM APART HF180M444KEV

PAR(2)= .97250 PAR(4)= .91100

TEMP IN K	W(0D)	W(90D)	DY	AY	ANISTROPY	ANISTROPY1
.00100	.11037	1.24879	1.13842	1.35915	10.31499	1.67519
.00200	.12046	1.24839	1.12792	1.36885	9.36326	1.64799
.00300	.14991	1.24700	1.09709	1.39691	7.31813	1.57073
.00400	.19040	1.24450	1.05410	1.43490	5.53617	1.46923
.00500	.23482	1.24091	1.00609	1.47574	4.28445	1.36351
.00600	.27956	1.23634	.95677	1.51590	3.42237	1.26231
.00700	.32292	1.23090	.90798	1.55382	2.81178	1.16871
.00800	.36413	1.22475	.85052	1.58888	2.36353	1.08331
.00900	.40239	1.21804	.81515	1.62093	2.02327	1.00578
.01000	.43915	1.21091	.77176	1.65006	1.75741	.93544
.01100	.47297	1.20349	.73053	1.67646	1.54455	.87151
.01200	.50447	1.19590	.69143	1.70037	1.37062	.81328
.01300	.53378	1.18823	.65445	1.72202	1.22605	.75009
.01400	.56107	1.18057	.61950	1.74165	1.10414	.71140
.01500	.58647	1.17300	.58653	1.75947	1.00010	.66671
.01600	.61012	1.16556	.55544	1.77568	.91038	.62551
.01700	.63215	1.15830	.52615	1.79045	.83233	.58773
.01800	.65257	1.15126	.49859	1.80394	.76392	.55278
.01900	.67130	1.14447	.47266	1.81627	.70357	.52048
.02000	.68965	1.13793	.44829	1.82758	.65003	.49058
.02100	.70629	1.13167	.42538	1.83796	.60227	.46288
.02200	.72183	1.12568	.40385	1.84751	.55949	.43719
.02300	.73633	1.11997	.38364	1.85630	.52101	.41334
.02400	.74988	1.11453	.35465	1.86441	.48627	.39117
.02500	.76255	1.10936	.34681	1.87191	.45480	.37054
.02600	.77440	1.10446	.33006	1.87885	.42621	.35134
.02700	.78548	1.09980	.31432	1.88528	.40016	.33344
.02800	.79586	1.09539	.29952	1.89125	.37635	.31675
.02900	.80559	1.09121	.28562	1.89679	.35455	.30116
.03000	.81471	1.08725	.27254	1.90196	.33453	.28659
.03100	.82326	1.08350	.26024	1.90676	.31611	.27297
.03200	.83129	1.07996	.24867	1.91125	.29913	.26021
.03300	.83884	1.07650	.23777	1.91544	.28345	.24826
.03400	.84593	1.07348	.22750	1.91935	.26893	.23706
.03500	.85250	1.07042	.21782	1.92302	.25547	.22653
.03600	.85889	1.06757	.20868	1.92646	.24297	.21665
.03700	.86481	1.06487	.20007	1.92968	.23134	.20736
.03800	.87039	1.06232	.19193	1.93271	.22051	.19861
.03900	.87556	1.05989	.18424	1.93555	.21040	.19037
.04000	.88053	1.05750	.17696	1.93823	.20095	.18260
.04100	.88533	1.05542	.17008	1.94075	.19211	.17527
.04200	.88978	1.05335	.16357	1.94313	.18383	.16835
.04300	.89399	1.05138	.15740	1.94537	.17606	.16182
.04400	.89797	1.04952	.15154	1.94749	.16876	.15563
.04500	.90175	1.04774	.14599	1.94949	.16190	.14978
.04600	.90533	1.04606	.14072	1.95139	.15544	.14423
.04700	.90873	1.04446	.13572	1.95318	.14935	.13897
.04800	.91196	1.04292	.13096	1.95488	.14361	.13398
.04900	.91503	1.04147	.12644	1.95649	.13818	.12925
.05000	.91795	1.04008	.12213	1.95802	.13305	.12475
.05100	.92072	1.03876	.11803	1.95948	.12820	.12047
.05200	.92337	1.03749	.11413	1.96086	.12360	.11640

.05300	.92589	1.03629	.11040	1.96218	.11924	.11253
.05400	.92829	1.03514	.10685	1.96343	.11510	.10884
.05500	.93058	1.03404	.10346	1.96462	.11117	.10532
.05600	.93277	1.03299	.10022	1.96576	.10744	.10196
.05700	.93486	1.03198	.09712	1.96684	.10389	.09876
.05800	.93686	1.03102	.09416	1.96788	.10051	.09570
.05900	.93877	1.03010	.09133	1.96887	.09729	.09278
.06000	.94060	1.02922	.08862	1.96981	.09422	.08998
.06100	.94234	1.02837	.08603	1.97072	.09129	.08730
.06200	.94402	1.02756	.08354	1.97158	.08849	.08474
.06300	.94563	1.02678	.08116	1.97241	.08582	.08229
.06400	.94717	1.02604	.07887	1.97320	.08327	.07994
.06500	.94864	1.02532	.07667	1.97396	.08083	.07769
.06600	.95006	1.02463	.07457	1.97469	.07849	.07552
.06700	.95142	1.02397	.07254	1.97539	.07625	.07345
.06800	.95273	1.02333	.07060	1.97606	.07410	.07145
.06900	.95399	1.02272	.06873	1.97671	.07204	.06954
.07000	.95520	1.02213	.06693	1.97733	.07007	.06770
.07100	.95636	1.02156	.06520	1.97792	.06818	.06593
.07200	.95748	1.02102	.06354	1.97850	.06636	.06423
.07300	.95856	1.02049	.06193	1.97905	.06461	.06259
.07400	.95960	1.01998	.06038	1.97958	.06293	.06101
.07500	.96060	1.01949	.05889	1.98009	.06131	.05949
.07600	.96156	1.01902	.05746	1.98058	.05975	.05802
.07700	.96249	1.01856	.05607	1.98106	.05826	.05661
.07800	.96339	1.01812	.05473	1.98152	.05681	.05524
.07900	.96426	1.01770	.05344	1.98196	.05542	.05393
.08000	.96509	1.01729	.05220	1.98238	.05408	.05256
.08100	.96590	1.01689	.05099	1.98280	.05279	.05143
.08200	.96668	1.01651	.04983	1.98319	.05154	.05025
.08300	.96744	1.01614	.04870	1.98358	.05034	.04910
.08400	.96817	1.01578	.04761	1.98395	.04918	.04800
.08500	.96887	1.01543	.04656	1.98431	.04805	.04693
.08600	.96956	1.01510	.04554	1.98466	.04697	.04589
.08700	.97022	1.01477	.04455	1.98499	.04592	.04489
.08800	.97086	1.01446	.04360	1.98532	.04491	.04392
.08900	.97148	1.01415	.04267	1.98563	.04392	.04298
.09000	.97208	1.01386	.04177	1.98594	.04297	.04207
.09100	.97266	1.01357	.04090	1.98623	.04205	.04119
.09200	.97323	1.01329	.04006	1.98652	.04116	.04033
.09300	.97378	1.01302	.03924	1.98680	.04030	.03950
.09400	.97431	1.01276	.03845	1.98707	.03946	.03870
.09500	.97482	1.01250	.03768	1.98733	.03865	.03792
.09600	.97532	1.01226	.03693	1.98758	.03787	.03716
.09700	.97581	1.01202	.03621	1.98783	.03711	.03643
.09800	.97628	1.01178	.03550	1.98807	.03637	.03572
.09900	.97674	1.01156	.03482	1.98830	.03565	.03502
.10000	.97719	1.01134	.03415	1.98852	.03495	.03435

10 CM APART HF180M444KEN

PAR(2)= .98520 PAR(4)= .95120

TEMP IN K	W(0D)	W(90D)	DY	AY	ANISTROPY	ANISTROPY1
.00100	.09179	1.24942	1.15764	1.34121	12.61216	1.72626
.00200	.10218	1.24908	1.14690	1.35127	11.22416	1.69752
.00300	.13249	1.24736	1.11536	1.38034	8.41846	1.61607
.00400	.17414	1.24656	1.07142	1.41970	6.15272	1.50937
.00500	.21930	1.24217	1.02237	1.46197	4.65136	1.39862
.00600	.26576	1.23777	.97201	1.50353	3.65753	1.29298
.00700	.31026	1.23248	.92222	1.54274	2.97246	1.19557
.00800	.35251	1.22644	.87393	1.57896	2.47914	1.10697
.00900	.39223	1.21982	.82758	1.61205	2.10994	1.02675
.01000	.42936	1.21274	.78339	1.64210	1.82456	.95413
.01100	.46395	1.20535	.74140	1.66931	1.59800	.88827
.01200	.49615	1.19777	.70161	1.69392	1.41411	.82839
.01300	.52610	1.19009	.66399	1.71620	1.26209	.77379
.01400	.55396	1.18241	.62846	1.73637	1.13448	.72387
.01500	.57987	1.17481	.59494	1.75468	1.02598	.67811
.01600	.60399	1.16733	.56334	1.77131	.93271	.63607
.01700	.62643	1.16003	.53359	1.78646	.85180	.59738
.01800	.64734	1.15294	.50560	1.80028	.78104	.56169
.01900	.66682	1.14609	.47927	1.81292	.71874	.52873
.02000	.68498	1.13951	.45452	1.82449	.66356	.49825
.02100	.70192	1.13319	.43127	1.83510	.61442	.47002
.02200	.71772	1.12714	.40943	1.84486	.57046	.44386
.02300	.73247	1.12138	.38891	1.85384	.53096	.41957
.02400	.74624	1.11589	.36964	1.86213	.49534	.39701
.02500	.75912	1.11066	.35155	1.86978	.46310	.37603
.02600	.77115	1.10571	.33455	1.87686	.43383	.35650
.02700	.78242	1.10100	.31859	1.88342	.40718	.33831
.02800	.79296	1.09654	.30358	1.88950	.38285	.32134
.02900	.80284	1.09232	.28948	1.89515	.36057	.30550
.03000	.81209	1.08832	.27622	1.90041	.34014	.29070
.03100	.82078	1.08453	.26375	1.90531	.32134	.27686
.03200	.82893	1.08094	.25201	1.90988	.30402	.26390
.03300	.83659	1.07755	.24096	1.91414	.28803	.25177
.03400	.84379	1.07434	.23055	1.91813	.27323	.24039
.03500	.85056	1.07129	.22073	1.92186	.25951	.22971
.03600	.85694	1.06841	.21148	1.92535	.24678	.21967
.03700	.86294	1.06568	.20274	1.92863	.23494	.21024
.03800	.86861	1.06310	.19449	1.93171	.22391	.20136
.03900	.87395	1.06064	.18669	1.93460	.21362	.19300
.04000	.87900	1.05832	.17932	1.93732	.20401	.18512
.04100	.88377	1.05611	.17235	1.93988	.19501	.17769
.04200	.88828	1.05402	.16574	1.94230	.18659	.17067
.04300	.89254	1.05203	.15949	1.94458	.17869	.16403
.04400	.89659	1.05014	.15356	1.94673	.17127	.15776
.04500	.90042	1.04835	.14793	1.94876	.16429	.15182
.04600	.90405	1.04664	.14259	1.95069	.15772	.14619
.04700	.90750	1.04501	.13752	1.95251	.15154	.14086
.04800	.91077	1.04347	.13270	1.95424	.14570	.13580
.04900	.91388	1.04199	.12811	1.95588	.14018	.13100
.05000	.91684	1.04059	.12375	1.95743	.13497	.12644
.05100	.91966	1.03925	.11959	1.95891	.13004	.12210
.05200	.92234	1.03797	.11563	1.96031	.12537	.11798

.05300	.92439	1.03675	.11186	1.96164	.12094	.11405
.05400	.92733	1.03559	.10826	1.96292	.11674	.11030
.05500	.92965	1.03447	.10482	1.96413	.11275	.10674
.05600	.93137	1.03341	.10154	1.96528	.10896	.10333
.05700	.93399	1.03239	.09840	1.96638	.10536	.10009
.05800	.93601	1.03142	.09540	1.96743	.10193	.09698
.05900	.93795	1.03049	.09254	1.96844	.09866	.09402
.06000	.93980	1.02959	.08979	1.96939	.09554	.09119
.06100	.94158	1.02874	.08716	1.97031	.09257	.08847
.06200	.94327	1.02791	.08464	1.97119	.08973	.08588
.06300	.94490	1.02713	.08222	1.97203	.08702	.08339
.06400	.94646	1.02637	.07991	1.97283	.08443	.08101
.06500	.94796	1.02564	.07768	1.97360	.08195	.07872
.06600	.94940	1.02495	.07555	1.97434	.07958	.07653
.06700	.95078	1.02428	.07350	1.97505	.07730	.07443
.06800	.95210	1.02363	.07153	1.97573	.07513	.07241
.06900	.95338	1.02301	.06963	1.97639	.07304	.07047
.07000	.95460	1.02241	.06781	1.97702	.07104	.06860
.07100	.95578	1.02184	.06606	1.97762	.06911	.06681
.07200	.95692	1.02129	.06437	1.97820	.06727	.06508
.07300	.95801	1.02075	.06274	1.97876	.06549	.06342
.07400	.95906	1.02024	.06118	1.97930	.06379	.06182
.07500	.96008	1.01974	.05967	1.97982	.06215	.06028
.07600	.96105	1.01927	.05821	1.98032	.06057	.05879
.07700	.96200	1.01880	.05681	1.98080	.05905	.05736
.07800	.96291	1.01836	.05545	1.98127	.05759	.05598
.07900	.96378	1.01793	.05414	1.98171	.05618	.05464
.08000	.96463	1.01751	.05288	1.98215	.05482	.05336
.08100	.96545	1.01711	.05166	1.98256	.05351	.05211
.08200	.96624	1.01672	.05048	1.98297	.05224	.05091
.08300	.96701	1.01635	.04934	1.98336	.05102	.04975
.08400	.96775	1.01598	.04824	1.98373	.04984	.04863
.08500	.96846	1.01563	.04717	1.98410	.04871	.04755
.08600	.96916	1.01529	.04614	1.98445	.04760	.04650
.08700	.96983	1.01496	.04514	1.98479	.04654	.04548
.08800	.97048	1.01464	.04417	1.98512	.04551	.04450
.08900	.97110	1.01433	.04323	1.98544	.04452	.04355
.09000	.97171	1.01403	.04232	1.98575	.04355	.04263
.09100	.97230	1.01374	.04144	1.98605	.04262	.04173
.09200	.97288	1.01346	.04059	1.98634	.04172	.04087
.09300	.97343	1.01319	.03976	1.98662	.04084	.04003
.09400	.97397	1.01292	.03895	1.98689	.04000	.03921
.09500	.97449	1.01267	.03817	1.98716	.03917	.03842
.09600	.97500	1.01242	.03742	1.98742	.03838	.03765
.09700	.97549	1.01217	.03668	1.98766	.03760	.03691
.09800	.97597	1.01194	.03597	1.98791	.03685	.03619
.09900	.97643	1.01171	.03527	1.98814	.03613	.03548
.10000	.97689	1.01149	.03460	1.98837	.03542	.03480

15 CM APART HF180M444KEV

PAR(2)= .99200 PAR(4)= .98000

TEMP IN K	W(0D)	W(90D)	DY	AY	ANISTROPY	ANISTROPY1
.00100	.08005	1.24809	1.15904	1.32915	14.60381	1.75909
.00200	.09055	1.24880	1.15815	1.33945	12.77650	1.72930
.00300	.12154	1.24770	1.12617	1.36924	9.26609	1.64495
.00400	.16397	1.24558	1.08161	1.40954	6.59654	1.53470
.00500	.21046	1.24236	1.03190	1.45283	4.90298	1.42054
.00600	.25723	1.23812	.98088	1.49535	3.81320	1.31191
.00700	.30249	1.23296	.93047	1.53545	3.07600	1.21198
.00800	.34545	1.22703	.88159	1.57248	2.55203	1.12127
.00900	.38579	1.22049	.83470	1.60628	2.16361	1.03929
.01000	.42348	1.21348	.79000	1.63696	1.86551	.95521
.01100	.45858	1.20614	.74756	1.66472	1.63016	.89812
.01200	.49123	1.19859	.70736	1.68982	1.43998	.83726
.01300	.52158	1.19094	.66935	1.71252	1.28332	.78172
.01400	.54979	1.18327	.63347	1.73306	1.15220	.73104
.01500	.57603	1.17566	.59963	1.75169	1.04097	.68463
.01600	.60043	1.16818	.56774	1.76861	.94556	.64202
.01700	.62314	1.16086	.53772	1.78401	.86293	.60283
.01800	.64428	1.15376	.50948	1.79805	.79077	.56670
.01900	.66397	1.14690	.48292	1.81087	.72732	.53336
.02000	.68233	1.14029	.45796	1.82261	.67118	.50253
.02100	.69943	1.13395	.43451	1.83338	.62123	.47400
.02200	.71539	1.12788	.41249	1.84327	.57659	.44756
.02300	.73029	1.12209	.39180	1.85238	.53650	.42302
.02400	.74420	1.11657	.37238	1.86077	.50037	.40024
.02500	.75719	1.11133	.35414	1.86852	.46770	.37906
.02600	.76934	1.10635	.33701	1.87569	.43804	.35934
.02700	.78071	1.10162	.32091	1.88233	.41106	.34098
.02800	.79134	1.09714	.30579	1.88848	.38642	.32385
.02900	.80131	1.09289	.29158	1.89420	.36389	.30787
.03000	.81055	1.08887	.27822	1.89952	.34321	.29294
.03100	.81941	1.08506	.26566	1.90447	.32421	.27898
.03200	.82753	1.08146	.25383	1.90909	.30669	.26592
.03300	.83535	1.07804	.24269	1.91339	.29053	.25368
.03400	.84251	1.07481	.23220	1.91742	.27557	.24221
.03500	.84944	1.07175	.22231	1.92119	.26172	.23143
.03600	.85537	1.06885	.21299	1.92472	.24886	.22132
.03700	.86192	1.06611	.20419	1.92803	.23690	.21181
.03800	.86753	1.06351	.19587	1.93114	.22576	.20286
.03900	.87302	1.06104	.18802	1.93406	.21537	.19443
.04000	.87811	1.05870	.18059	1.93681	.20566	.18649
.04100	.88291	1.05648	.17357	1.93939	.19659	.17899
.04200	.88746	1.05437	.16692	1.94183	.18808	.17192
.04300	.89176	1.05237	.16062	1.94413	.18011	.16523
.04400	.89583	1.05047	.15464	1.94630	.17262	.15891
.04500	.89959	1.04857	.14898	1.94836	.16559	.15292
.04600	.90335	1.04695	.14360	1.95030	.15896	.14726
.04700	.90682	1.04531	.13849	1.95214	.15272	.14188
.04800	.91012	1.04376	.13363	1.95388	.14683	.13679
.04900	.91326	1.04227	.12901	1.95553	.14127	.13195
.05000	.91624	1.04036	.12462	1.95710	.13601	.12735
.05100	.91908	1.03951	.12043	1.95859	.13104	.12298
.05200	.92178	1.03823	.11645	1.96000	.12633	.11882

.05300	.92435	1.03700	.11265	1.96135	.12186	.11437
.05400	.92681	1.03533	.10902	1.96263	.11763	.11109
.05500	.92915	1.03471	.10556	1.96385	.11361	.10750
.05600	.93138	1.03353	.10225	1.96502	.10979	.10407
.05700	.93352	1.03251	.09909	1.96613	.10615	.10080
.05800	.93556	1.03153	.09607	1.96719	.10269	.09768
.05900	.93751	1.03059	.09318	1.96820	.09940	.09469
.06000	.93937	1.02979	.09042	1.96916	.09625	.09183
.06100	.94116	1.02893	.08777	1.97009	.09326	.08910
.06200	.94287	1.02810	.08523	1.97097	.09040	.08649
.06300	.94451	1.02731	.08280	1.97182	.08766	.08398
.06400	.94608	1.02655	.08047	1.97263	.08505	.08158
.06500	.94759	1.02582	.07823	1.97341	.08255	.07928
.06600	.94904	1.02512	.07608	1.97415	.08016	.07707
.06700	.95043	1.02444	.07401	1.97487	.07787	.07495
.06800	.95176	1.02379	.07203	1.97556	.07568	.07292
.06900	.95305	1.02317	.07012	1.97621	.07357	.07096
.07000	.95428	1.02257	.06828	1.97685	.07156	.06908
.07100	.95547	1.02199	.06652	1.97746	.06962	.06728
.07200	.95661	1.02143	.06482	1.97804	.06776	.06554
.07300	.95771	1.02089	.06318	1.97861	.06597	.06386
.07400	.95877	1.02038	.06160	1.97915	.06425	.06225
.07500	.95979	1.01988	.06008	1.97967	.06260	.06070
.07600	.96078	1.01940	.05862	1.98018	.06101	.05920
.07700	.96173	1.01893	.05720	1.98066	.05948	.05776
.07800	.96265	1.01848	.05584	1.98113	.05801	.05637
.07900	.96353	1.01805	.05452	1.98158	.05658	.05503
.08000	.96438	1.01763	.05325	1.98202	.05522	.05373
.08100	.96521	1.01723	.05202	1.98244	.05389	.05248
.08200	.96601	1.01684	.05083	1.98284	.05262	.05127
.08300	.96678	1.01646	.04968	1.98324	.05139	.05010
.08400	.96752	1.01609	.04857	1.98362	.05020	.04897
.08500	.96824	1.01574	.04750	1.98398	.04906	.04788
.08600	.96894	1.01540	.04646	1.98434	.04795	.04682
.08700	.96961	1.01507	.04545	1.98468	.04687	.04580
.08800	.97027	1.01474	.04448	1.98501	.04584	.04481
.08900	.97090	1.01443	.04353	1.98533	.04484	.04385
.09000	.97152	1.01413	.04262	1.98565	.04387	.04292
.09100	.97211	1.01384	.04173	1.98595	.04293	.04202
.09200	.97269	1.01355	.04087	1.98624	.04202	.04115
.09300	.97325	1.01328	.04003	1.98652	.04113	.04031
.09400	.97379	1.01301	.03922	1.98680	.04028	.03949
.09500	.97431	1.01275	.03844	1.98707	.03945	.03869
.09600	.97482	1.01250	.03768	1.98733	.03865	.03792
.09700	.97532	1.01226	.03694	1.98758	.03787	.03717
.09800	.97580	1.01202	.03622	1.98782	.03712	.03644
.09900	.97627	1.01179	.03552	1.98806	.03638	.03573
.10000	.97672	1.01156	.03484	1.98829	.03567	.03505

The input data for computation are:

magnetic hyperfine splitting	UH	-8.68686×10^{-18} erg
reorientation parameters	U(k)	1. for k = 1,2,3,4
mixing ratio for E3/M2	PAR(6)	5.34522
	F(1,1)	-0.6124
	F(1,2)	0.5345
	F(2,1)	-0.38132
angular distribution	F(2,2)	-0.58248
parameter	F(2,3)	-0.22244
	F(3,1)	0.5393
	F(3,2)	-0.2746
	F(4,1)	-0.17271
	F(4,2)	0.65953
	F(4,3)	-0.10075
solid angle correction	G(1)	1.0000; 0.9990; 0.9970
	G(2)	0.992 ; 0.9852; 0.9725
	G(3)	0.9900; 0.9680; 0.9420
	G(4)	0.9800; 0.9512; 0.9110

The parity mixing ratio is varied from 0.01 to 0.085 in 0.0025 step for G(1) = 1. and from 0.010 to 0.080 in 0.0020 step for G(1) = 0.9990 and 0.9970. All the U_k are equal to 1., because the 501 keV transition is coming out directly from the polarized 8- isomeric state.

Only one geometry, i.e., G(1) = 1. and $\varepsilon = -0.0325$ is presented in the following pages as an example.

```
      PROGRAM ANIST(INPUT,OUTPUT)
      DIMENSION Y(3)
      DIMENSION PAR(10),DPAR(10)
      DIMENSION U(4),A(4,3)
      COMMON /PARIN/U,S,A,UH,IDE
    9 FORMAT(1H1,10X,20HPARITY MAXING RATIO=,F10.5////)
  100 FORMAT(8F10.5)
  101 FORMAT(4F10.5)
  102 FORMAT(F10.2,F20.10)
C
C     PAR(1)=G(1)  SOLID ANGLE CCORECTION COEFFICIENT
C     PAR(2)=G(2)  SOLID ANGLE CCORECTION COEFFICIENT
C     PAR(3)=G(3)  SOLID ANGLE CCORECTION COEFFICIENT
C     PAR(4)=G(4)  SOLID ANGLE CCORECTION COEFFICIENT
C     PAR(5)=ACTO  ACTIVITY AT TIME 0
C     PAR(6)=RATIC MIXING RATIO OF GAMMA RAY ONE LOOKING AT
C     PAR(7)=HL     HALF LIFE OF ISOMERIC STATE IN HOURS
C     PAR(8)=TEMP  INITIAL TEMPERATURE AFTER DEMAGNETIZATION
C     PAR(9)=SLOP  RATE OF TEMPERATURE RAISE AFTER DEMAGNETIZATION
C     PAR(10)=BACK
C
C
C     F1(L,L')=F1COEFF. OF GAMMA RAY L AND L'
C     A(1,1)=F1(1,1), A(1,2)=F1(1,2), A(1,3)=F1(2,2)
C     A(2,1)=F2(1,1), A(2,2)=F2(1,2), A(2,3)=F2(2,2)
C     A(3,1)=F3(1,1), A(3,2)=F3(1,2), A(3,3)=F3(2,2)
C     A(4,1)=F4(1,1), A(4,2)=F4(1,2), A(4,3)=F4(2,2)
C
   10 FORMAT(F10.5)
   11 FORMAT(10X,49HTEMP IN K   W(180D)   W(  0D)   W( 90D)      AW  ,
     12X,9HASYMMETRY,3X,9HANISTROPY//)
   12 FORMAT(10X,F10.5,F10.5,F10.5,F10.5,F10.5,F10.5,F10.5)
      J=-1
      X=0.0
      READ 101, (U(I),I=1,4)
      READ 102, S,UH
      READ 100, ((A(I,J),J=1,3),I=1,4)
      PAR(2)=0.992
      PAR(4)=0.98
      PAR(5)=1.0
      PAR(6)=5.34522
      PAR(7)=5.5
      PAR(9)=0.0
      PAR(10)=0.0
      READ 10, TI
      PX=0.02
      DO 999 K=1,31
      BI=FLOAT(K)-1.
      PAR(1)=PX+0.005*BI
      PAR(3)=0.99*PAR(1)
      E=PAR(1)*0.5
      PRINT 9,E
      PRINT 11
      DO 1 I=1,100
      AI=FLOAT(I)-1.
      PAR(8)=TI+AI*0.001
      DO 2 IDE=1,3
      CALL THEORY(J,X,PAR,Y(IDE),DPAR)
```

```
  2 CONTINUE
    AY=(Y(3)+Y(1))*0.5
    DY=(Y(3)-Y(1))/AY
    AN=(Y(2)-Y(1))/AY
    PRINT 12, PAR(8),Y(3),Y(1),Y(2),AY,DY,AN
  1 CONTINUE
999 CONTINUE
    END
```

```
      SUBROUTINE THEORY(J,X,PAR,F,DPAR)
      REAL LN2,LT
      DIMENSION P1(4),P2(4),P3(4),P4(4)
      DIMENSION PAR(10),DPAR(10)
      DIMENSION G(4),U(4),A(4,3)
      COMMON/PARIN/U,S,A,UH,IDE
C
C     P1(IDE)=COS(IDE-1)*90
C     P2(IDE)=0.5*(3*(COS((IDE-1)*90))**2-1.)
C     P3(IDE)=0.5*(5.*(COS((N-1)*90))**3-3*COS(N-1)*90
C     P4(IDE)=0.125*(35.*((COS((N-1)*90))**4-3*(COS((N-1)*90))**2+3)
C     N=IDE
C
      P1(1)=1.
      P1(2)=0.
      P1(3)=-1.
      P1(4)=0.
      P2(1)=1.
      P2(2)=-0.5
      P2(3)=1.
      P2(4)=-0.5
      P3(1)=1.
      P3(2)=0.
      P3(3)=-1.
      P3(4)=0.
      P4(1)=1.
      P4(2)=0.375
      P4(3)=1.
      P4(4)=0.375
      G(1)=PAR(1)
      G(2)=PAR(2)
      G(3)=PAR(3)
      G(4)=PAR(4)
      ACTO=PAR(5)
      RATIO=PAR(6)
      HL=PAR(7)
      TEMP=PAR(8)
      SLOP=PAR(9)
      BACK=PAR(10)
      A1=(A(1,1)+1.*RATIO*A(1,2)+RATIO**2*A(1,3))/(1.+RATIO**2)
- MULTIPLY OR DIVIDE BY 1

      A2=(A(2,1)+2.*RATIO*A(2,2)+RATIO**2*A(2,3))/(1.+RATIO**2)
      A3=(A(3,1)+1.*RATIO*A(3,2)+RATIO**2*A(3,3))/(1.+RATIO**2)
- MULTIPLY OR DIVIDE BY 1

      A4=(A(4,1)+2.*RATIO*A(4,2)+RATIO**2*A(4,3))/(1.+RATIO**2)
      BETA=1./(138.0*TEMP*S)
      BETA1=BETA/(1.+SLOP*X)
      B=UH*BETA1
      C1=SQRT(3./((S+1.)*S))
      C2=3.*SQRT(5./(S*(S+1.)*(2.*S-1.)*(2.*S+3.)))
      C3=5.*SQRT(7./((S+2.)*(2.*S+3.)*(S+1.)*S*(2.*S-1.)*(S-1.)))
      F1=1.
      I=2.*S-4.
      DO 1 I=1,I
      F1=F1*I
    1 CONTINUE
- IS ONE STATEMENT DO WITH OUT PARENTHSIS GROUP CORRECT
```

```
      F2=1.
      L=2.*S+5.
      DO 2 I=1,L
      F2=F2*I
    2 CONTINUE
IS ONE STATEMENT DO WITH OUT PARENTHSIS GROUP CORRECT

      IF(S-2.) 3,3,4
    4 C4=SQRT((2.*S+1.)*F1/F2)
      GO TO 5
    3 C4=0.
    5 S0=0.
      S1=0.
      S2=0.
      S3=0.
      S4=0.
      S5=0.
      S11=0.
      S21=0.
      S31=0.
      S41=0.
      S51=0.
      NL=2.*S+1.
      DO 6 K=1,NL
      AM=K-1.-S
      EX=EXP(-AM*B0)
      S0=S0+EX
      S1=S1+AM*EX
      S2=S2+AM**2*EX
      S3=S3+AM**3*EX
      S4=S4+AM**4*EX
      S5=S5+AM**5*EX
      AMX=(-AM)*EX
      S11=S11+AMX
      S21=S21+AM*AMX
      S31=S31+AM**2*AMX
      S41=S41+AM**3*AMX
      S51=S51+AM**4*AMX
    6 CONTINUE
      B1=C1*S1/S0
      B2=C2*(S2/S0-S*(S+1.)/3.)
      B3=C3*(S3/S0-0.2*(3.*S**2+3.*S-1.)*S1/S0)
      B4=C4*(210.*S4/S0-30.*(6.*S**2+6.*S-5.)*S2/S0+18.*S*(S-1.)*(S+1.)*
     1(S+2))
      LN2=ALOG(2.)
      LT=HL*60./LN2
      T=K/LT
      E=EXP(-T)
      F0=(1.+A1*B1*G(1))*U(1)*P1(IDE)+
     1       A2*B2*G(2)*U(2)*P2(IDE)+
     2       A3*B3*G(3)*U(3)*P3(IDE)+
     3       A4*B4*G(4)*U(4)*P4(IDE))*ACT0*E
      F=F0+BACK
      IF(J) 10,11,11
   11 CONTINUE

      DERIVATIVE OF F
```

```
      DPAR(1)=A1*B1*J(1)*P1(IDE)*ACT0*E
      DPAR(2)=A2*B2*J(2)*P2(IDE)*ACT0*E
      DPAR(3)=A3*B3*J(3)*P3(IDE)*ACT0*E
      DPAR(4)=A4*B4*J(4)*P4(IDE)*ACT0*E
      DPAR(5)=(1.+A1*B1*G(1)*U(1)*P1(IDE)+
     1          A2*B2*G(2)*U(2)*P2(IDE)+
     2          A3*B3*G(3)*U(3)*P3(IDE)+
     4          A4*B4*G(4)*U(4)*P4(IDE))*F
      DA1=2.*(-RATIO*A(1,1)+(1.-RATIO**2)*A(1,2)+RATIO*A(1,3))
      DA2=2.*(-RATIO*A(2,1)+(1.-RATIO**2)*A(2,2)+RATIO*A(2,3))
      DA3=2.*(-RATIO*A(3,1)+(1.-RATIO**2)*A(3,2)+RATIO*A(3,3))
      DA4=2.*(-RATIO*A(4,1)+(1.-RATIO**2)*A(4,2)+RATIO*A(4,3))
      DPAR(6)=(DA1*B1*G(1)*U(1)*P1(IDE)+
     1         DA2*B2*G(2)*U(2)*P2(IDE)+
     2         DA3*B3*G(3)*U(3)*P3(IDE)+
     3         DA4*B4*G(4)*U(4)*P4(IDE))*ACT0*E/(1.+RATIO**2)**2
      DPAR(7)=(T/H_0*F0
      C3F=0.2*(3.*S**2+3.*S-1.)
      C4F=30.*(6.*S**2+6.*S-5.)
      DBT=-B/TEMP
      DS0T=S11*DBT
      DS1T=S21*DBT
      DS2T=S31*DBT
      DS3T=S41*DBT
      DS4T=S51*DBT
      DB1T=C1*(S0*DS1T-S1*DS0T)/S0**2
      DB2T=C2*(S0*DS2T-S2*DS0T)/S0**2
      DB3T=C3*((S0*DS3T-S3*DS0T)/S0**2-C3F*DB1T/C1)
      DB4T=C4*(210.*(S0*DS4T-S4*DS0T)/S0**2-C4F*DB2T/C2)
      DPAR(8)=(A1*DB1T*G(1)*J(1)*P1(IDE)+
     1         A2*DB2T*G(2)*J(2)*P2(IDE)+
     2         A3*DB3T*G(3)*J(3)*P3(IDE)+
     3         A4*DB4T*G(4)*J(4)*P4(IDE))*ACT0*E
      SS=(1.+S_D*X)
      DBS=-B*X/SS
      DS0S=S11*DBS
      DS1S=S21*DBS
      DS2S=S31*DBS
      DS3S=S41*DBS
      DS4S=S51*DBS
      DB1S=C1*(S0*DS1S-S1*DS0S)/S0**2
      DB2S=C2*(S0*DS2S-S2*DS0S)/S0**2
      DB3S=C3*((S0*DS3S-S3*DS0S)/S0**2-C3F*DB1S/C1)
      DB4S=C4*(210.*(S0*DS4S-S4*DS0S)/S0**2-C4F*DB2S/C2)
      DPAR(9)=(A1*DB1S*G(1)*J(1)*P1(IDE)+
     1         A2*DB2S*G(2)*J(2)*P2(IDE)+
     2         A3*DB3S*G(3)*J(3)*P3(IDE)+
     3         A4*DB4S*G(4)*J(4)*P4(IDE))*ACT0*E
      DPAR(10)=1.
   10 CONTINUE
      RETURN
      END
```

PARITY MAXING RATIO= .03250

TEMP IN K	W(180D)	W(0D)	W(90D)	AN	ASYMMETRY	ANISTROPY
.01000	.48338	.49386	1.32369	.48862	-.02144	1.69834
.01100	.50083	.51141	1.30566	.50612	-.02091	1.56929
.01200	.51881	.52947	1.28867	.52414	-.02034	1.44847
.01300	.53707	.54778	1.27269	.54242	-.01975	1.33643
.01400	.55539	.56612	1.25767	.56075	-.01914	1.23326
.01500	.57358	.58430	1.24356	.57894	-.01853	1.13873
.01600	.59149	.60219	1.23032	.59684	-.01793	1.05241
.01700	.60902	.61967	1.21790	.61434	-.01734	.97377
.01800	.62605	.63664	1.20624	.63134	-.01677	.90221
.01900	.64253	.65304	1.19531	.64778	-.01622	.83712
.02000	.65841	.66882	1.18506	.66361	-.01570	.77793
.02100	.67365	.68396	1.17545	.67880	-.01519	.72406
.02200	.68824	.69844	1.16645	.69334	-.01471	.67501
.02300	.70217	.71225	1.15800	.70721	-.01425	.63030
.02400	.71545	.72540	1.15009	.72043	-.01381	.58949
.02500	.72809	.73791	1.14266	.73300	-.01339	.55219
.02600	.74010	.74978	1.13570	.74494	-.01300	.51805
.02700	.75150	.76104	1.12916	.75627	-.01262	.48676
.02800	.76231	.77172	1.12303	.76701	-.01226	.45803
.02900	.77256	.78183	1.11727	.77719	-.01192	.43161
.03000	.78228	.79140	1.11186	.78684	-.01159	.40728
.03100	.79148	.80046	1.10678	.79597	-.01128	.38484
.03200	.80019	.80903	1.10199	.80461	-.01099	.36410
.03300	.80845	.81715	1.09749	.81280	-.01070	.34491
.03400	.81627	.82483	1.09326	.82055	-.01043	.32713
.03500	.82367	.83210	1.08927	.82789	-.01018	.31063
.03600	.83069	.83898	1.08550	.83484	-.00993	.29530
.03700	.83734	.84550	1.08196	.84142	-.00969	.28102
.03800	.84365	.85167	1.07861	.84766	-.00947	.26772
.03900	.84963	.85752	1.07544	.85358	-.00925	.25530
.04000	.85530	.86307	1.07245	.85919	-.00905	.24369
.04100	.86068	.86833	1.06962	.86451	-.00885	.23284
.04200	.86580	.87333	1.06694	.86956	-.00866	.22266
.04300	.87065	.87806	1.06441	.87436	-.00848	.21312
.04400	.87527	.88257	1.06201	.87892	-.00830	.20416
.04500	.87966	.88684	1.05973	.88325	-.00813	.19574
.04600	.88384	.89091	1.05756	.88737	-.00797	.18781
.04700	.88781	.89478	1.05551	.89130	-.00781	.18034
.04800	.89160	.89846	1.05356	.89503	-.00766	.17329
.04900	.89521	.90197	1.05170	.89859	-.00752	.16664
.05000	.89865	.90531	1.04994	.90198	-.00738	.16035
.05100	.90193	.90849	1.04826	.90521	-.00724	.15440
.05200	.90507	.91153	1.04666	.90830	-.00711	.14877
.05300	.90806	.91442	1.04513	.91124	-.00699	.14344
.05400	.91091	.91719	1.04368	.91405	-.00687	.13838
.05500	.91365	.91983	1.04229	.91674	-.00675	.13357
.05600	.91626	.92236	1.04096	.91931	-.00663	.12901
.05700	.91876	.92477	1.03969	.92177	-.00652	.12467
.05800	.92115	.92708	1.03848	.92412	-.00642	.12054
.05900	.92345	.92930	1.03732	.92637	-.00631	.11661
.06000	.92564	.93141	1.03621	.92853	-.00621	.11286
.06100	.92775	.93344	1.03515	.93060	-.00612	.10929
.06200	.92977	.93539	1.03413	.93258	-.00602	.10588
.06300	.93171	.93725	1.03316	.93448	-.00593	.10263

.06400	.93357	.93904	1.03222	.93631	-.00584	.09951
.06500	.93536	.94076	1.03132	.93806	-.00576	.09654
.06600	.93708	.94241	1.03046	.93975	-.00567	.09369
.06700	.93873	.94400	1.02963	.94136	-.00559	.09097
.06800	.94032	.94552	1.02884	.94292	-.00551	.08836
.06900	.94185	.94699	1.02807	.94442	-.00544	.08586
.07000	.94332	.94840	1.02734	.94586	-.00536	.08346
.07100	.94474	.94975	1.02663	.94725	-.00529	.08116
.07200	.94611	.95106	1.02595	.94858	-.00522	.07895
.07300	.94743	.95232	1.02529	.94987	-.00515	.07683
.07400	.94870	.95353	1.02466	.95111	-.00508	.07479
.07500	.94992	.95470	1.02405	.95231	-.00502	.07283
.07600	.95110	.95582	1.02346	.95346	-.00495	.07094
.07700	.95225	.95691	1.02290	.95458	-.00489	.06912
.07800	.95335	.95796	1.02235	.95565	-.00483	.06738
.07900	.95441	.95897	1.02182	.95669	-.00477	.06569
.08000	.95544	.95995	1.02131	.95770	-.00471	.06407
.08100	.95644	.96090	1.02082	.95867	-.00465	.06250
.08200	.95740	.96181	1.02034	.95960	-.00460	.06100
.08300	.95833	.96269	1.01988	.96051	-.00454	.05954
.08400	.95923	.96355	1.01944	.96139	-.00449	.05813
.08500	.96010	.96437	1.01901	.96224	-.00444	.05678
.08600	.96095	.96517	1.01859	.96306	-.00439	.05547
.08700	.96176	.96595	1.01819	.96386	-.00434	.05420
.08800	.96256	.96670	1.01780	.96463	-.00429	.05297
.08900	.96332	.96742	1.01742	.96537	-.00425	.05179
.09000	.96407	.96813	1.01705	.96610	-.00420	.05064
.09100	.96479	.96881	1.01670	.96680	-.00415	.04953
.09200	.96549	.96947	1.01635	.96748	-.00411	.04846
.09300	.96617	.97011	1.01602	.96814	-.00407	.04742
.09400	.96683	.97073	1.01570	.96878	-.00402	.04641
.09500	.96747	.97133	1.01538	.96940	-.00398	.04544
.09600	.96810	.97192	1.01508	.97001	-.00394	.04449
.09700	.96870	.97249	1.01478	.97059	-.00390	.04357
.09800	.96929	.97304	1.01449	.97116	-.00386	.04268
.09900	.96986	.97358	1.01421	.97172	-.00383	.04182
.10000	.97041	.97410	1.01394	.97226	-.00379	.04098
.10100	.97095	.97460	1.01368	.97278	-.00375	.04017
.10200	.97148	.97509	1.01342	.97329	-.00371	.03938
.10300	.97199	.97557	1.01317	.97378	-.00368	.03861
.10400	.97249	.97604	1.01293	.97426	-.00364	.03786
.10500	.97297	.97649	1.01269	.97473	-.00361	.03714
.10600	.97344	.97693	1.01246	.97519	-.00358	.03643
.10700	.97390	.97736	1.01224	.97563	-.00354	.03575
.10800	.97435	.97778	1.01202	.97606	-.00351	.03508
.10900	.97478	.97818	1.01181	.97648	-.00348	.03443

APPENDIX III

ANISOTROPY OF GAMMA DECAY FROM ^{60}Co(Fe)

^{60}Co(Fe) is the most commonly used nuclear thermometry in low temperatures. The validity of its thermodynamic temperature scales have been investigated by Frankel et al.[a] The purpose of this calculation is provided for point by point comparison of the external temperatures, ^{60}Co(Fe), to the internal temperatures, 444 keV gamma transition from ^{180m}Hf.

The input data are listed as follows:

magnetic hyperfine splitting	UH	5.4547×10^{-18} erg
half life	PAR(7)	46077.6 hours
reorientation parameter	U(2)	0.93937
	U(4)	0.79772
angular distribution parameter	F(2,1)	-0.44772
	F(4,1)	-0.30438
solid angle correction	G(2)	0.990; 0.9855; 0.9537
	G(4)	0.960; 0.9522; 0.8518

The results with the list of FORTRAN program except the subroutine Theory which is exactly the same as subroutine Theory used in Appendix II are presented in the following pages.

---

[a] R. B. Frankel, D. A. Shirley, and N. J. Stone, "The Cerium Magnesium Nitrate Temperature Scale From Nuclear Orientation", UCRL-16012, April 1965.

```
      PROGRAM ANIT4(INPUT,OUTPUT)
      DIMENSION ID(4)
      DIMENSION Y(3)
      DIMENSION PAR(10),DPAR(10)
      DIMENSION U(4),A(4,3)
      COMMON/PARIN/U,S,A,JH,IDE
    9 FORMAT(2F10.5)
   10 FORMAT(F10.5)
   11 FORMAT(10X,49HTEMP IN K    W( 0D)    W( 90D)     DY          AY
     12X,9HANISTROPY,2X,10HANISTROPY1//)
   12 FORMAT(10X,F10.5,F10.5,F10.5,F10.5,F10.5,F10.5,F10.5)
   13 FORMAT(/// 5X,10HPAR(2)=    ,F10.5,5X,10HPAR(4)=    ,F10.5//)
   14 FORMAT(4A10)
   15 FORMAT(1H1,15X,4A10)
  100 FORMAT(8F10.5)
  101 FORMAT(4F10.5)
  102 FORMAT(F10.2,F20.10)
  103 FORMAT(5X,20H*** ERROR IN THEORY)
      J=-1
      X=0.0
      READ 101, (U(I),I=1,4)
      READ 102, S,JH
      READ 100, ((A(I,J),J=1,3),I=1,4)
      PAR(1)=0.0
      PAR(3)=0.0
      PAR(5)=1.0
      PAR(6)=0.0
      PAR(7)=45277.5
      PAR(9)=0.0
      PAR(10)=0.0
      READ 10, TI
      DO 999 K=1,2
      READ 14, ID
      READ 9, PAR(2),PAR(4)
      PRINT 15, ID
      PRINT 13, PAR(2),PAR(4)
      PRINT 11
      DO 1 I=1,100
      AI=FLOAT(I)-1.

      PAR(8)=TI+AI*0.001
      DO 2 IDE=1,2
      CALL THEORY(J,X,PAR,Y(IDE),DPAR)
    2 CONTINUE
      DY=Y(2)-Y(1)
      AY=Y(2)+Y(1)
      AN=DY/Y(1)
      ANI=2.*DY/AY
      PRINT 12, PAR(8),Y(1),Y(2),DY,AY,AN,ANI
    1 CONTINUE
      GO TO 999
  998 PRINT 103
  999 CONTINUE
      END
```

SINCH APART 0060

PAR(2)= .95370 PAR(4)= .95130

TEMP IN K	W(0D)	W(90D)	DY	AY	ANISTROPY	ANISTROPY
.00100	.07572	1.24835	1.17353	1.32507	15.49930	1.77142
.00200	.09270	1.24838	1.15017	1.34158	12.47158	1.72353
.00300	.14125	1.24620	1.10565	1.38815	7.82769	1.53299
.00400	.20563	1.24272	1.03709	1.44834	5.04356	1.43211
.00500	.27318	1.23621	.95303	1.50939	3.52522	1.27605
.00600	.33808	1.22759	.88951	1.56577	2.63138	1.13633
.00700	.39808	1.21756	.81958	1.61574	2.05884	1.01450
.00800	.45258	1.20654	.75406	1.65923	1.66612	.90893
.00900	.50159	1.19510	.69341	1.69680	1.38214	.81732
.01000	.54576	1.18342	.63754	1.72920	1.16832	.73755
.01100	.58533	1.17129	.58659	1.75719	1.00221	.66755
.01200	.62072	1.15872	.54000	1.78144	.86996	.60625
.01300	.65247	1.14615	.49756	1.80252	.76260	.55209
.01400	.68097	1.13397	.45900	1.82193	.67404	.50414
.01500	.70656	1.12251	.42396	1.83707	.60004	.46156
.01600	.72956	1.11170	.39214	1.85127	.53750	.42364
.01700	.75026	1.10153	.36325	1.86381	.48415	.38979
.01800	.76896	1.09197	.33701	1.87493	.43827	.35949
.01900	.78583	1.08299	.31316	1.88482	.39851	.33230
.02000	.80109	1.07456	.29147	1.89365	.36385	.30784
.02100	.81492	1.06664	.27173	1.90156	.33344	.28579
.02200	.82747	1.05919	.25372	1.90867	.30663	.26587
.02300	.83889	1.05218	.23729	1.91506	.28287	.24782
.02400	.84929	1.04556	.22227	1.92084	.26172	.23143
.02500	.85878	1.03930	.20852	1.92608	.24281	.21653
.02600	.86746	1.03338	.19592	1.93084	.22585	.20294
.02700	.87541	1.02776	.18435	1.93517	.21058	.19052
.02800	.88271	1.02241	.17376	1.93912	.19678	.17916
.02900	.88942	1.01732	.16390	1.94273	.18428	.16873
.03000	.89559	1.01246	.15486	1.94604	.17291	.15915
.03100	.90129	1.00780	.14650	1.94909	.16255	.15033
.03200	.90656	1.00333	.13877	1.95189	.15308	.14220
.03300	.91143	1.00904	.13151	1.95447	.14440	.13469
.03400	.91595	1.00491	.12496	1.95686	.13643	.12772
.03500	.92014	1.00093	.11879	1.95907	.12910	.12127
.03600	.92404	1.00706	.11304	1.96111	.12233	.11529
.03700	.92767	1.00335	.10768	1.96302	.11608	.10971
.03800	.93105	1.00373	.10268	1.96478	.11028	.10452
.03900	.93421	1.00222	.09801	1.96643	.10491	.09968
.04000	.93717	1.00080	.09364	1.96797	.09992	.09516
.04100	.93993	.99948	.08955	1.96941	.09527	.09094
.04200	.94252	.99823	.08571	1.97075	.09093	.08698
.04300	.94495	.99706	.08210	1.97201	.08688	.08327
.04400	.94724	.99595	.07871	1.97319	.08310	.07978
.04500	.94939	.99491	.07552	1.97430	.07955	.07651
.04600	.95141	.99393	.07252	1.97534	.07623	.07343
.04700	.95332	.99301	.06969	1.97633	.07310	.07052
.04800	.95512	.99213	.06702	1.97725	.07017	.06779
.04900	.95682	.99131	.06449	1.97812	.06740	.06520
.05000	.95842	.99052	.06210	1.97895	.06480	.06276
.05100	.95994	.98978	.05984	1.97973	.06234	.06045

.05200	.96138	1.01958	.05770	1.98047	.06002	.05827
.05300	.96275	1.01841	.05567	1.98116	.05782	.05623
.05400	.96404	1.01778	.05374	1.98183	.05574	.05423
.05500	.96527	1.01718	.05191	1.98245	.05377	.05237
.05600	.96644	1.01661	.05017	1.98305	.05191	.05059
.05700	.96755	1.01606	.04851	1.98362	.05014	.04891
.05800	.96861	1.01554	.04693	1.98416	.04845	.04731
.05900	.96962	1.01505	.04543	1.98467	.04685	.04578
.06000	.97058	1.01458	.04400	1.98516	.04533	.04433
.06100	.97150	1.01413	.04263	1.98563	.04388	.04294
.06200	.97237	1.01370	.04132	1.98607	.04250	.04161
.06300	.97321	1.01329	.04008	1.98650	.04118	.04035
.06400	.97401	1.01289	.03888	1.98690	.03992	.03914
.06500	.97477	1.01252	.03774	1.98729	.03872	.03799
.06600	.97550	1.01216	.03665	1.98766	.03757	.03688
.06700	.97621	1.01181	.03561	1.98802	.03648	.03582
.06800	.97688	1.01148	.03461	1.98836	.03542	.03481
.06900	.97752	1.01116	.03364	1.98868	.03442	.03384
.07000	.97814	1.01086	.03272	1.98900	.03345	.03290
.07100	.97873	1.01057	.03184	1.98930	.03253	.03201
.07200	.97930	1.01029	.03099	1.98959	.03164	.03115
.07300	.97985	1.01002	.03017	1.98986	.03079	.03033
.07400	.98037	1.00976	.02939	1.99013	.02997	.02953
.07500	.98088	1.00951	.02863	1.99038	.02919	.02877
.07600	.98136	1.00927	.02790	1.99063	.02843	.02804
.07700	.98183	1.00904	.02721	1.99087	.02771	.02733
.07800	.98228	1.00881	.02653	1.99109	.02701	.02665
.07900	.98272	1.00860	.02588	1.99131	.02634	.02599
.08000	.98313	1.00839	.02526	1.99152	.02569	.02536
.08100	.98354	1.00819	.02465	1.99173	.02506	.02475
.08200	.98393	1.00800	.02407	1.99193	.02446	.02417
.08300	.98430	1.00781	.02351	1.99212	.02388	.02360
.08400	.98467	1.00763	.02296	1.99230	.02332	.02305
.08500	.98502	1.00746	.02244	1.99248	.02278	.02252
.08600	.98536	1.00729	.02193	1.99265	.02226	.02201
.08700	.98568	1.00713	.02144	1.99281	.02175	.02152
.08800	.98600	1.00697	.02097	1.99297	.02127	.02104
.08900	.98631	1.00682	.02051	1.99313	.02080	.02058
.09000	.98660	1.00667	.02007	1.99328	.02034	.02013
.09100	.98689	1.00653	.01964	1.99342	.01990	.01970
.09200	.98717	1.00639	.01922	1.99356	.01947	.01928
.09300	.98744	1.00626	.01882	1.99370	.01906	.01888
.09400	.98770	1.00613	.01843	1.99383	.01866	.01848
.09500	.98795	1.00600	.01805	1.99395	.01827	.01810
.09600	.98820	1.00588	.01768	1.99408	.01789	.01773
.09700	.98844	1.00576	.01733	1.99420	.01753	.01738
.09800	.98867	1.00565	.01698	1.99431	.01717	.01703
.09900	.98889	1.00554	.01664	1.99443	.01683	.01669
.10000	.98911	1.00543	.01632	1.99454	.01650	.01636

4INCH-APART CORE

PAR(2)= .96550 PAR(4)= .95220

TEMP IN K	W([illegible])	W(950)	DY	AY	ANISTROPY	ANISTROPY1
.00100	.02435	1.24895	1.22561	1.27430	50.33987	1.92358
.00200	.04267	1.24876	1.20709	1.29243	28.28824	1.86794
.00300	.09499	1.24852	1.15353	1.34351	12.14410	1.71726
.00400	.16422	1.24521	1.08100	1.40943	6.58272	1.53395
.00500	.23656	1.23948	1.00292	1.47614	4.23739	1.35871
.00600	.30603	1.23154	.92551	1.53757	3.02423	1.20386
.00700	.36990	1.22190	.85194	1.59187	2.30277	1.07037
.00800	.42785	1.21110	.78325	1.63896	1.83065	.95579
.00900	.47986	1.19955	.71979	1.67951	1.50002	.85715
.01000	.52641	1.18795	.66154	1.71437	1.25679	.77176
.01100	.56805	1.17634	.60829	1.74438	1.07085	.69743
.01200	.60528	1.16503	.55975	1.77031	.92479	.63239
.01300	.63860	1.15419	.51560	1.79279	.80739	.57519
.01400	.66844	1.14393	.47549	1.81237	.71134	.52471
.01500	.69520	1.13428	.43907	1.82948	.63157	.48000
.01600	.71924	1.12527	.40603	1.84451	.56453	.44026
.01700	.74086	1.11691	.37605	1.85776	.50758	.40484
.01800	.76033	1.10916	.34882	1.86949	.45878	.37319
.01900	.77791	1.10200	.32409	1.87991	.41662	.34430
.02000	.79379	1.09540	.30161	1.88919	.37996	.31930
.02100	.80818	1.08932	.28114	1.89750	.34787	.29633
.02200	.82123	1.08372	.26249	1.90495	.31963	.27559
.02300	.83309	1.07856	.24547	1.91165	.29465	.25685
.02400	.84389	1.07381	.22991	1.91770	.27244	.23978
.02500	.85375	1.06943	.21568	1.92318	.25262	.22429
.02600	.86276	1.06539	.20263	1.92815	.23486	.21018
.02700	.87101	1.06166	.19065	1.93267	.21888	.19729
.02800	.87858	1.05821	.17963	1.93679	.20446	.18549
.02900	.88554	1.05502	.16949	1.94056	.19139	.17468
.03000	.89194	1.05207	.16013	1.94401	.17953	.16474
.03100	.89785	1.04933	.15148	1.94718	.16872	.15559
.03200	.90331	1.04679	.14349	1.95010	.15884	.14716
.03300	.90839	1.04443	.13608	1.95279	.14980	.13937
.03400	.91304	1.04223	.12920	1.95527	.14150	.13215
.03500	.91738	1.04019	.12281	1.95757	.13387	.12547
.03600	.92142	1.03828	.11686	1.95971	.12683	.11926
.03700	.92518	1.03650	.11132	1.96167	.12032	.11349
.03800	.92868	1.03483	.10615	1.96351	.11437	.10812
.03900	.93195	1.03327	.10132	1.96522	.10872	.10311
.04000	.93501	1.03181	.09685	1.96682	.10353	.09843
.04100	.93787	1.03044	.09256	1.96831	.09870	.09405
.04200	.94056	1.02915	.08859	1.96971	.09419	.08996
.04300	.94307	1.02794	.08487	1.97101	.08999	.08612
.04400	.94544	1.02680	.08136	1.97224	.08606	.08251
.04500	.94756	1.02573	.07807	1.97339	.08238	.07912
.04600	.94976	1.02472	.07496	1.97447	.07893	.07593
.04700	.95173	1.02376	.07203	1.97549	.07569	.07293
.04800	.95359	1.02286	.06927	1.97645	.07264	.07009
.04900	.95535	1.02201	.06666	1.97736	.06977	.06742
.05000	.95701	1.02120	.06419	1.97821	.06707	.06490
.05100	.95858	1.02043	.06185	1.97902	.06452	.06251

.05200	.95989	1.01980	.05991	1.97969	.06241	.06052
.05300	.96131	1.01911	.05784	1.98042	.06012	.05837
.05400	.96256	1.01845	.05586	1.98111	.05796	.05633
.05500	.96393	1.01783	.05389	1.98176	.05591	.05439
.05600	.96515	1.01723	.05219	1.98238	.05397	.05255
.05700	.96630	1.01667	.05037	1.98297	.05212	.05080
.05800	.96740	1.01613	.04873	1.98353	.05037	.04913
.05900	.96845	1.01562	.04717	1.98407	.04870	.04755
.06000	.96945	1.01513	.04568	1.98458	.04712	.04603
.06100	.97040	1.01466	.04426	1.98506	.04561	.04459
.06200	.97131	1.01422	.04290	1.98553	.04417	.04322
.06300	.97218	1.01379	.04161	1.98597	.04280	.04190
.06400	.97301	1.01338	.04037	1.98639	.04149	.04065
.06500	.97380	1.01299	.03919	1.98679	.04024	.03945
.06600	.97455	1.01262	.03805	1.98718	.03905	.03830
.06700	.97529	1.01225	.03697	1.98755	.03790	.03720
.06800	.97599	1.01192	.03593	1.98790	.03681	.03615
.06900	.97666	1.01159	.03493	1.98824	.03576	.03514
.07000	.97730	1.01127	.03397	1.98857	.03476	.03417
.07100	.97791	1.01097	.03305	1.98888	.03380	.03324
.07200	.97850	1.01068	.03217	1.98918	.03288	.03235
.07300	.97907	1.01040	.03132	1.98947	.03199	.03149
.07400	.97962	1.01013	.03051	1.98974	.03114	.03067
.07500	.98014	1.00987	.02972	1.99001	.03033	.02987
.07600	.98065	1.00962	.02897	1.99027	.02954	.02911
.07700	.98113	1.00938	.02824	1.99051	.02879	.02838
.07800	.98160	1.00915	.02754	1.99075	.02806	.02767
.07900	.98205	1.00892	.02687	1.99098	.02736	.02699
.08000	.98249	1.00871	.02622	1.99120	.02669	.02634
.08100	.98291	1.00850	.02559	1.99141	.02604	.02570
.08200	.98331	1.00830	.02499	1.99161	.02541	.02509
.08300	.98370	1.00811	.02440	1.99181	.02481	.02450
.08400	.98408	1.00792	.02384	1.99200	.02423	.02394
.08500	.98444	1.00774	.02330	1.99218	.02366	.02339
.08600	.98480	1.00757	.02277	1.99236	.02312	.02286
.08700	.98514	1.00740	.02226	1.99253	.02260	.02234
.08800	.98547	1.00722	.02177	1.99270	.02209	.02185
.08900	.98578	1.00708	.02129	1.99286	.02160	.02137
.09000	.98609	1.00692	.02083	1.99302	.02113	.02091
.09100	.98639	1.00678	.02039	1.99317	.02067	.02046
.09200	.98668	1.00663	.01995	1.99331	.02022	.02002
.09300	.98696	1.00649	.01954	1.99345	.01979	.01960
.09400	.98723	1.00635	.01913	1.99359	.01938	.01919
.09500	.98749	1.00623	.01874	1.99372	.01897	.01880
.09600	.98775	1.00610	.01836	1.99385	.01858	.01841
.09700	.98799	1.00598	.01799	1.99397	.01821	.01804
.09800	.98823	1.00586	.01763	1.99410	.01784	.01768
.09900	.98847	1.00575	.01728	1.99421	.01748	.01733
.10000	.98869	1.00563	.01694	1.99433	.01714	.01699

SINGLE APART 2064

PAR(2)= .99000 PAR(4)= .96000

TEMP IN K	W(0D)	W(90D)	DY	AY	ANISTROPY	ANISTROPY1
.00100	.01831	1.26072	1.23182	1.26963	56.15483	1.94044
.00200	.03735	1.25564	1.21319	1.28789	32.48067	1.88399
.00300	.05601	1.24834	1.15933	1.33035	12.88058	1.73118
.00400	.15959	1.24636	1.08638	1.40575	6.80324	1.54562
.00500	.23256	1.24035	1.00776	1.47293	4.33289	1.36838
.00600	.30238	1.23242	.93004	1.53486	3.07568	1.21193
.00700	.36676	1.22277	.85607	1.58947	2.33453	1.07718
.00800	.42493	1.21195	.78702	1.63688	1.85212	.96150
.00900	.47723	1.20047	.72324	1.67770	1.51549	.85218
.01000	.52405	1.18874	.66459	1.71278	1.26838	.77615
.01100	.56591	1.17728	.61117	1.74299	1.07998	.70129
.01200	.60334	1.16573	.56239	1.76908	.93213	.63586
.01300	.63684	1.15486	.51802	1.79169	.81343	.57825
.01400	.66684	1.14455	.47771	1.81138	.71639	.52746
.01500	.69374	1.13486	.44112	1.82865	.63587	.48247
.01600	.71793	1.12582	.40792	1.84372	.56822	.44255
.01700	.73952	1.11742	.37780	1.85704	.51079	.40638
.01800	.75922	1.10954	.35044	1.86883	.46160	.37304
.01900	.77636	1.10246	.32555	1.87931	.41912	.34651
.02000	.79282	1.09532	.30301	1.88864	.38219	.32087
.02100	.80727	1.08972	.28244	1.89699	.34987	.29778
.02200	.82039	1.08459	.26376	1.90448	.32144	.27693
.02300	.83231	1.07891	.24660	1.91122	.29629	.25806
.02400	.84316	1.07414	.23097	1.91730	.27394	.24094
.02500	.85307	1.06974	.21657	1.92281	.25399	.22537
.02600	.86212	1.06568	.20356	1.92786	.23612	.21118
.02700	.87041	1.06198	.19152	1.93234	.22004	.19823
.02800	.87802	1.05847	.18046	1.93649	.20553	.18638
.02900	.88501	1.05527	.17027	1.94028	.19239	.17551
.03000	.89144	1.05230	.16086	1.94375	.18045	.16552
.03100	.89738	1.04955	.15218	1.94693	.16958	.15633
.03200	.90286	1.04700	.14414	1.94986	.15965	.14785
.03300	.90793	1.04463	.13670	1.95256	.15056	.14002
.03400	.91263	1.04243	.12979	1.95506	.14222	.13278
.03500	.91706	1.04037	.12337	1.95737	.13454	.12606
.03600	.92105	1.03846	.11740	1.95951	.12746	.11982
.03700	.92493	1.03656	.11183	1.96149	.12092	.11403
.03800	.92835	1.03499	.10654	1.96334	.11487	.10863
.03900	.93154	1.03342	.10178	1.96506	.10925	.10359
.04000	.93471	1.03195	.09724	1.96667	.10403	.09889
.04100	.93759	1.03058	.09299	1.96816	.09918	.09449
.04200	.94028	1.02928	.08900	1.96957	.09465	.09038
.04300	.94251	1.02807	.08525	1.97088	.09043	.08652
.04400	.94519	1.02692	.08174	1.97211	.08648	.08289
.04500	.94742	1.02585	.07842	1.97327	.08278	.07949
.04600	.94952	1.02483	.07530	1.97435	.07931	.07629
.04700	.95151	1.02387	.07236	1.97538	.07605	.07327
.04800	.95338	1.02296	.06959	1.97634	.07299	.07042
.04900	.95514	1.02211	.06696	1.97725	.07011	.06773
.05000	.95681	1.02130	.06448	1.97811	.06739	.06520
.05100	.95839	1.02053	.06213	1.97892	.06483	.06283

.05200	.96007	1.01971	.05954	1.97978	.06212	.05024
.05300	.96149	1.01952	.05753	1.98051	.05984	.05810
.05400	.96283	1.01837	.05554	1.98119	.05749	.05607
.05500	.96411	1.01775	.05365	1.98185	.05565	.05414
.05600	.96531	1.01716	.05185	1.98246	.05371	.05231
.05700	.96646	1.01659	.05014	1.98305	.05188	.05056
.05800	.96755	1.01606	.04851	1.98361	.05013	.04891
.05900	.96859	1.01555	.04695	1.98414	.04847	.04733
.06000	.96959	1.01506	.04547	1.98465	.04691	.04582
.06100	.97054	1.01459	.04406	1.98513	.04540	.04439
.06200	.97144	1.01415	.04271	1.98559	.04396	.04302
.06300	.97231	1.01373	.04142	1.98603	.04260	.04171
.06400	.97313	1.01332	.04019	1.98645	.04130	.04046
.06500	.97392	1.01293	.03901	1.98685	.04005	.03927
.06600	.97468	1.01256	.03788	1.98724	.03886	.03812
.06700	.97540	1.01220	.03680	1.98761	.03773	.03703
.06800	.97610	1.01186	.03576	1.98796	.03664	.03598
.06900	.97676	1.01153	.03477	1.98830	.03560	.03498
.07000	.97740	1.01122	.03382	1.98862	.03460	.03401
.07100	.97801	1.01092	.03290	1.98893	.03364	.03309
.07200	.97860	1.01063	.03203	1.98923	.03273	.03220
.07300	.97917	1.01035	.03118	1.98952	.03184	.03135
.07400	.97971	1.01008	.03037	1.98979	.03100	.03053
.07500	.98023	1.00982	.02959	1.99006	.03019	.02974
.07600	.98074	1.00957	.02884	1.99031	.02940	.02898
.07700	.98122	1.00934	.02812	1.99055	.02865	.02825
.07800	.98169	1.00910	.02742	1.99079	.02793	.02755
.07900	.98213	1.00888	.02675	1.99102	.02723	.02687
.08000	.98257	1.00867	.02610	1.99124	.02656	.02622
.08100	.98299	1.00846	.02548	1.99145	.02592	.02559
.08200	.98339	1.00826	.02487	1.99165	.02529	.02498
.08300	.98378	1.00807	.02429	1.99185	.02469	.02439
.08400	.98415	1.00788	.02373	1.99204	.02411	.02383
.08500	.98451	1.00771	.02319	1.99222	.02355	.02328
.08600	.98487	1.00753	.02267	1.99240	.02301	.02275
.08700	.98520	1.00736	.02216	1.99257	.02249	.02224
.08800	.98553	1.00720	.02167	1.99273	.02199	.02175
.08900	.98585	1.00704	.02120	1.99289	.02150	.02127
.09000	.98616	1.00689	.02074	1.99305	.02103	.02081
.09100	.98646	1.00675	.02029	1.99320	.02057	.02036
.09200	.98674	1.00660	.01986	1.99334	.02013	.01993
.09300	.98702	1.00646	.01945	1.99348	.01970	.01951
.09400	.98729	1.00633	.01904	1.99362	.01929	.01910
.09500	.98755	1.00620	.01865	1.99375	.01889	.01871
.09600	.98780	1.00608	.01827	1.99388	.01850	.01833
.09700	.98805	1.00595	.01790	1.99400	.01812	.01796
.09800	.98829	1.00583	.01755	1.99412	.01776	.01760
.09900	.98852	1.00572	.01720	1.99424	.01740	.01725
.10000	.98874	1.00561	.01686	1.99435	.01706	.01691

APPENDIX IV

GYROMAGNETIC RATIO OF ^{180m}Hf

The magnetic moment of deformed nuclei contains two parts, g_R, the collective gyromagnetic ratio, and g_K, the intrinsic gyromagnetic ratio. Based on Nilsson diagram with deformation $\eta = 4.$ (see Fig. AIV-1,2), one finds that the 8- state of ^{180}Hf can come from either a 2 proton state $\{7/2+(404),\ 9/2-(514)\}_{8-}$ or a 2 neutron state $\{7/2-(514),\ 9/2+(624)\}_{8-}$. The magnetic moments of both states can be estimated from their neighboring odd-mass nuclei whose magnetic moments are known. The gyromagnetic ratios of these nuclei are listed in the following table.

Table of Gyromagnetic Ratios

Nuclei Level	Nilsson State $I = K\ (Nn_Z\Lambda)$	Shell State	μ_{EXP}	g_R	g_K
^{181}Ta g.s.	7/2+(404)	$g_{7/2}$	2.35[a]	0.293[b]	0.778
				0.320[e]	0.771
^{181}Ta 56 keV	9/2-(514)	$h_{11/2}$	5.29[a]	0.293[b]	1.372
				0.320[e]	1.365
^{177}Hf g.s.	7/2-(514)	$f_{7/2}$	0.61[a]	0.253[c]	0.151
			0.7836[f]	0.249[f]	0.216[f]
^{179}Hf g.s.	9/2+(624)	$i_{13/2}$	-0.47[a]	0.263[c]	-.186
			-0.6329[f]	0.156[f]	-.207[f]
^{177}Hf 321 keV	9/2+(624)	$i_{13/2}$		0.19[e]	-.18[e]

The magnetic moment of deformed nuclei can be described as:

$$\mu_{(I)} = I \cdot g_R + \frac{K^2}{I+1}(g_K - g_R) \cdot (1 + \delta_{K,1/2} \cdot (-1)^{I+1/2} \cdot (2I+1)b_o) \ldots (1)$$

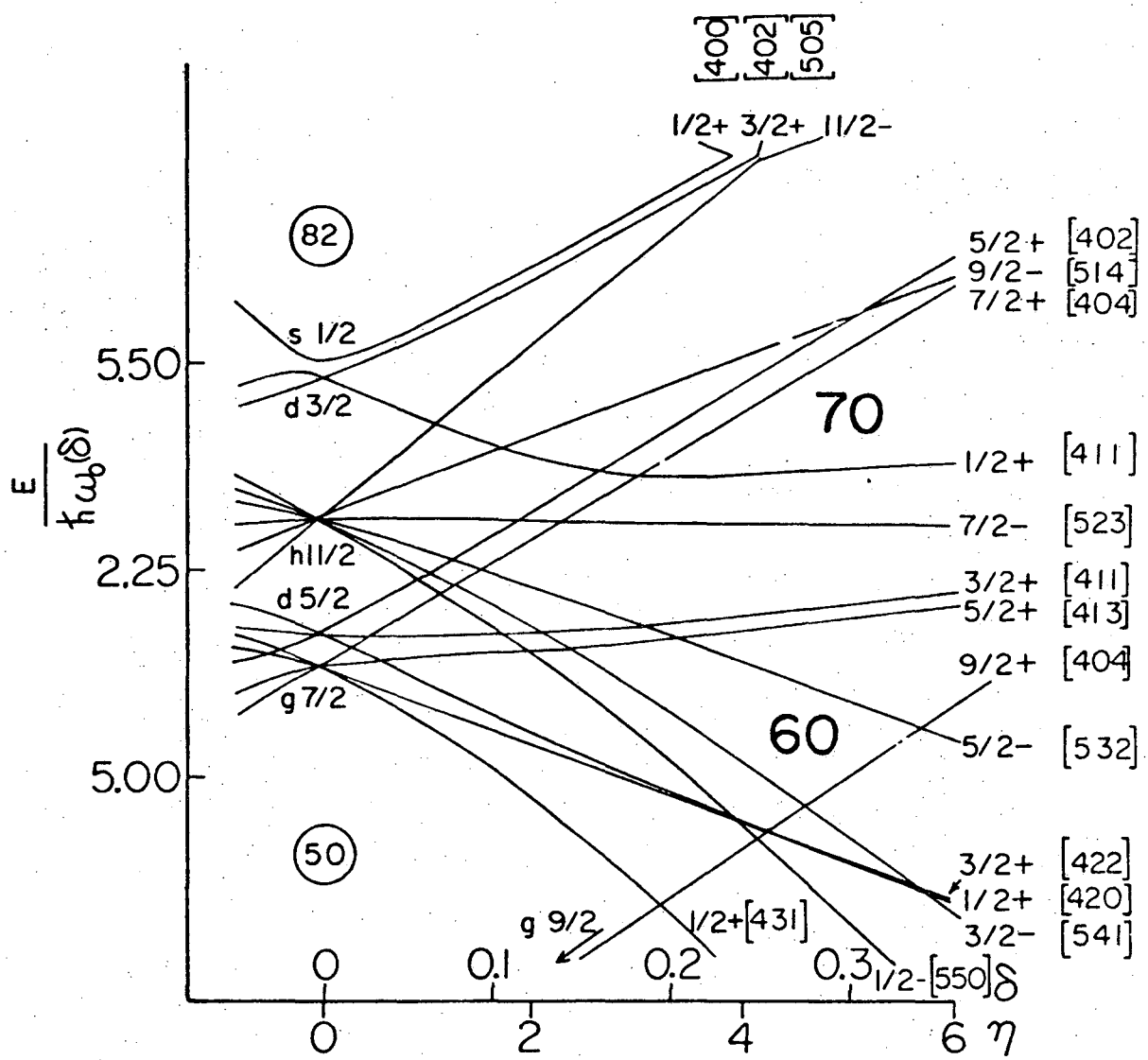
[400] [402] [505]
1/2+ 3/2+ 11/2-
82
s 1/2
d 3/2
5.50
2.25
5.00
E / ħω0(δ)
70
h11/2
d 5/2
g 7/2
60
50
g 9/2
1/2+[431]
1/2-[550]
5/2+ [402]
9/2- [514]
7/2+ [404]
1/2+ [411]
7/2- [523]
3/2+ [411]
5/2+ [413]
9/2+ [404]
5/2- [532]
3/2+ [422]
1/2+ [420]
3/2- [541]
0
0.1
0.2
0.3
δ
0
2
4
6
η

XBL741-2201

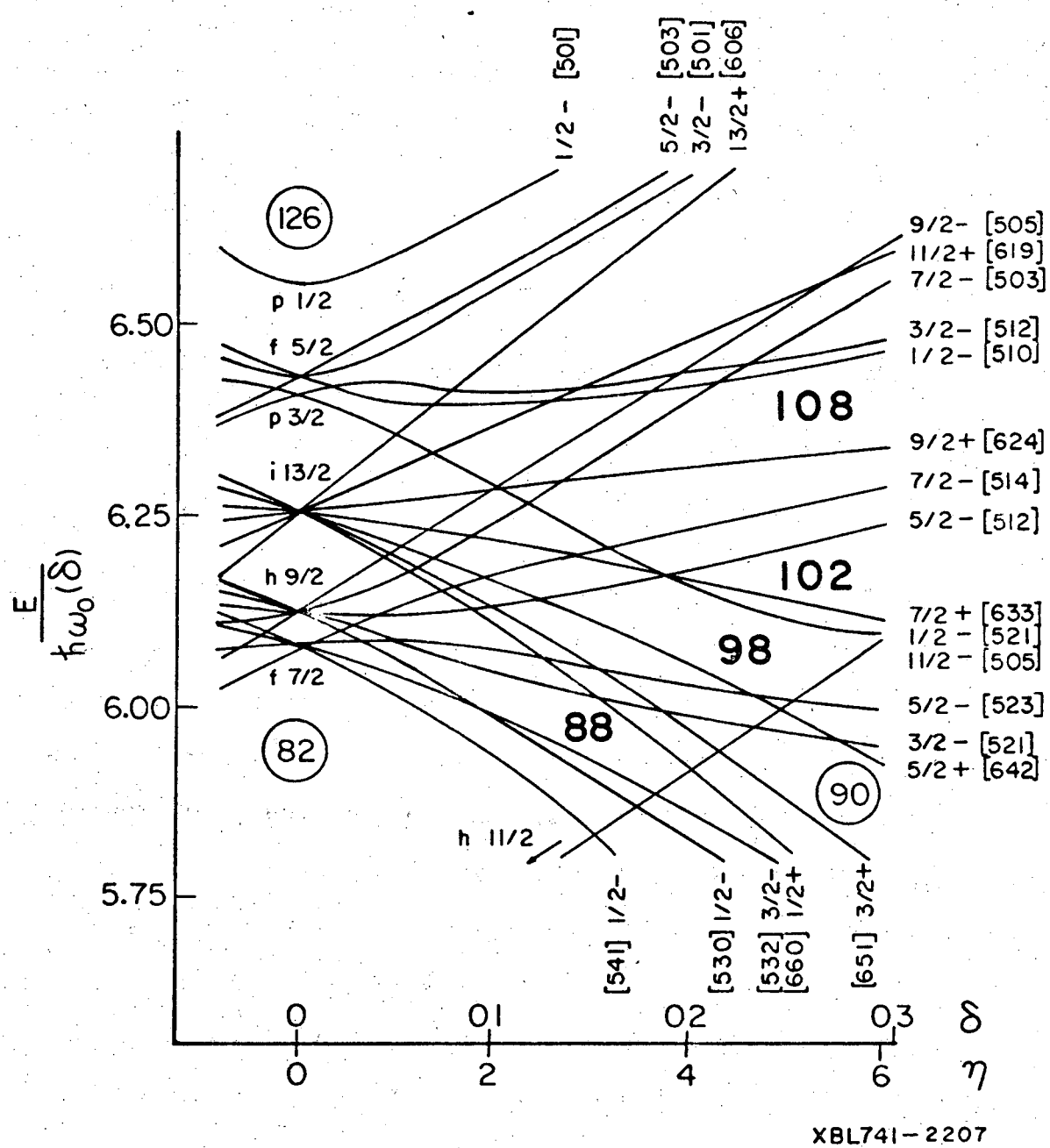
1/2 - [501]
5/2- [503]
3/2- [501]
13/2+ [606]
126
p 1/2
f 5/2
p 3/2
i 13/2
h 9/2
f 7/2
82
h 11/2
6.50
6.25
6.00
5.75
E / ħω₀(δ)
108
102
98
88
90
9/2- [505]
11/2+ [619]
7/2 - [503]
3/2- [512]
1/2- [510]
9/2+ [624]
7/2 - [514]
5/2 - [512]
7/2 + [633]
1/2 - [521]
11/2 - [505]
5/2 - [523]
3/2 - [521]
5/2 + [642]
[541] 1/2-
[530] 1/2-
[532] 3/2-
[660] 1/2+
[651] 3/2+
0
0.1
0.2
0.3
δ
0
2
4
6
η
XBL741-2207

where

$$\delta_{K,1/2} = 0 \text{ if } K \neq 1/2$$

$$\delta_{K,1/2} = 1 \text{ if } K = 1/2$$

$$(g_K - g_R) \cdot b_o = (g_1 - g_R) \langle K = 1/2 | j_+ | K = -1/2 \rangle + (g_s - g_1) \langle K = 1/2 | s_+ | K = -1/2 \rangle$$

$g_1 = 1$; $g_s = +5.58$ for proton

$g_1 = 0$; $g_s = -3.82$ for neutron

j_+, s_+ are raising operators

We evaluate the g_K from experimental data of g_R and μ_{exp}. Strictly speaking one must use an effective g_s instead of the free particle g_s. In this region g_s(effective)/g_s(free) = 0.6. But this complication in evaluating of b_o term drops out in our case where K = 8.

The values of $g_K(7/2)$ and $g_K(9/2)$ are obtained by substituting the known values of nuclear magnetic moments and g_R's into the Eq. (1). These calculated values are listed in column 7 of the table, except the last value from ^{177}Hf 321 keV level which is an experimental datum.

The intrinsic magnetic moment of two coupled nucleons can be expressed in terms of its individual magnetic moments in vector sum:

$$g_K(I) = 1/2 \cdot (g_{K1} + g_{K2}) + (g_{K1} - g_{K2}) \cdot \left(\frac{I_1(I_1 + 1) - I_2(I_2 + 1)}{2I(I + 1)} \right) \quad \ldots(2)$$

where $I = I_1 + I_2$.

If $I = |I_1| + |I_2|$, then $g_K(I)$ can be expressed as:

$$g_K(I) = \{I_1 \cdot g_{K1} + I_2 \cdot g_{K2}\}/I$$

where g_{K1}, g_{K2} are g_K for $I = I_1$ and $I = I_2$, respectively. $g_K(I)$ means only g_K of a nucleon at spin equal to I. It certainly does not imply that g_K has an I dependence.

The results of $g_K(8)$ and $\mu(8)$ based on Eq. (2) and Eq. (1) are listed in the following table.

	g_R	g(7/2)	g(9/2)	g_K	μ
$\{7/2+(404),\ 9/2-(514)\}_{8-}$	0.313^g	0.778	1.372	1.112	8.18
		0.771	1.365	1.105	8.14
	0.371^h	0.778	1.372	1.112	8.83
		0.771	1.365	1.105	8.18
$\{7/2-(514),\ 9/2+(624)\}_{8-}$	0.313^g	0.151	-.186	-.038	0.004
		0.216	-.207	-.022	0.122
	0.371^h	0.151	-.186	-.038	0.060
		0.216	-.207	-.022	0.174

In conclusion, the nuclear magnetic moment of the two-proton state is 8.33 n.m. and the nuclear magnetic moment of two-neutron state is less than 0.1 n.m.

[a]See text, Refs. 51, 52, 53, 54.

[b]F. Boehm, G. Goldring, G. B. Hagemann, G. D. Symonds, and A. Tveter, Phys. Letters 22, 627 (1966); G. G. Seaman, E. M. Bernstein, and J. M. Palms, Phys. Rev. 161, 1223 (1967).

[c]Z. Bocknacki and S. Ograza, Nucl. Phys. 69, 186 (1965).

[d]O. Prior, F. Boehm, and S. G. Nilsson, Nucl. Phys. A110, 267 (1968).

[e]H. Hubel, H. Toschinski, E. Bodenstedt, and K. Freitag, Proc. Roy. Soc. A311, 181 (1969).

[f]S. Buttgenbach et al., Phys. Letters 43B, 479 (1973).

[g]P. Gilad, G. Goldring, R. Herber, and R. Kalish, Nucl. Phys. A91, 85 (1967).

[h]E. Bodenstedt et al., Z. Phys. 165, 57 (1961).

APPENDIX V

ENERGY LEVELS OF ^{180}Hf

Fig. A-V 1 shows the energy levels of ^{180}Hf. The nuclear properties of the level is explicitly expressed in terms of its spin, parity, and rotational quantum number on the right-hand side of the level. The multipolarity and electromagnetic property of the radiations in terms of E1,M2 as electric dipole, magnetic quadrapole, respectively, is listed.

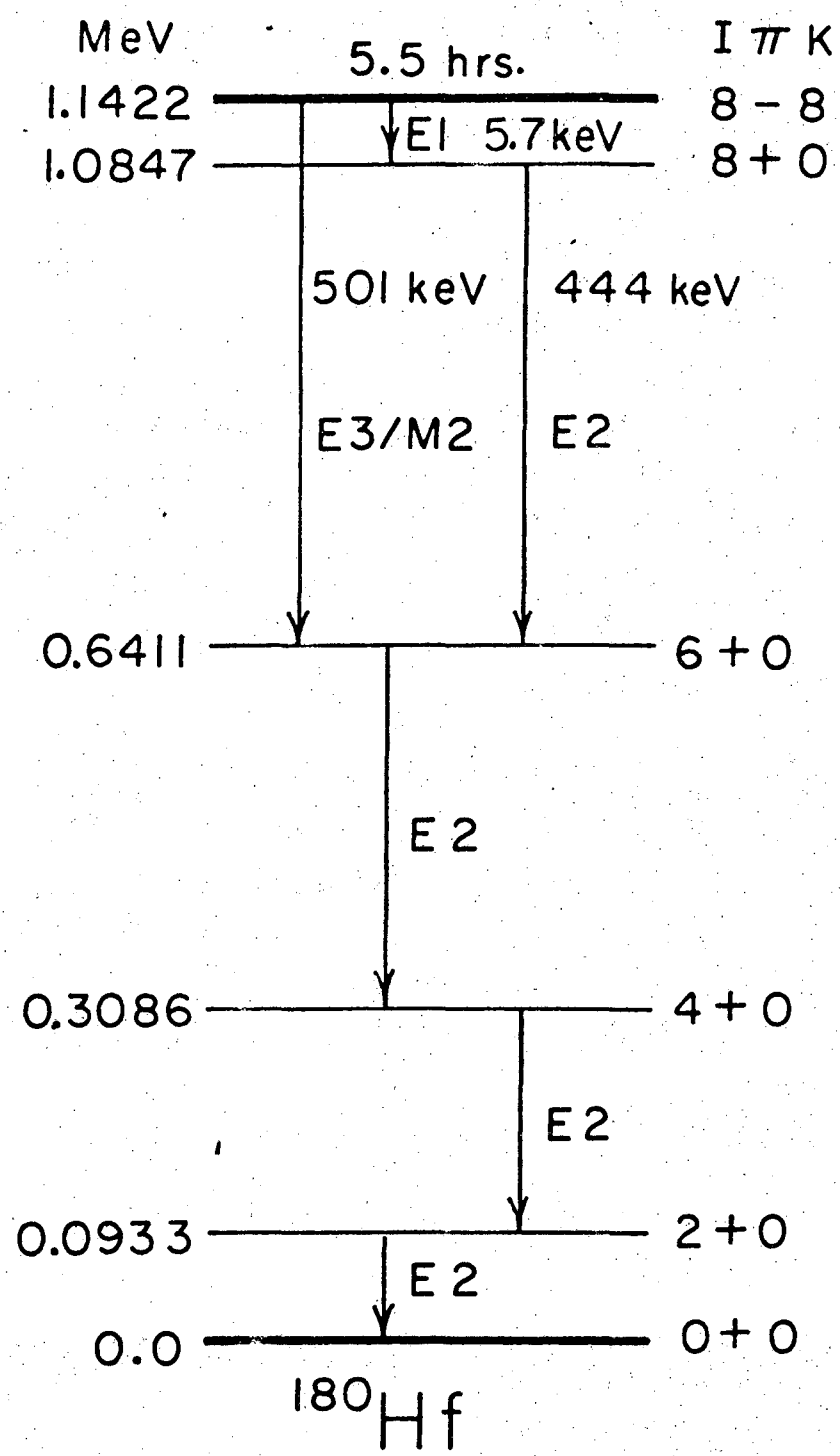
MeV
5.5 hrs.
I π K
1.1422
8 − 8
E1 5.7keV
1.0847
8 + 0
501 keV
444 keV
E3/M2
E2
0.6411
6 + 0
E 2
0.3086
4 + 0
E2
0.0933
2 + 0
E 2
0.0
0 + 0
180Hf

XBL741-2204

ACKNOWLEDGMENTS

It is my privilege to acknowledge the contribution of many others to this work; I especially thank:

Professor David A. Shirley, who directed this research; without his support and encouragement this experiment would never have been done.

My wife, Mei-han, for her unfailing patience in making everything smooth.

Dr. E. A. Philip, with whom I spent the first two years in experimental nuclear science and shared the "joy" of working with a dilution refrigerator.

Dr. Herb Rinneberg, from whom I benefited in both scientific advice and moral support.

Dr. K. Krane, who kindly and carefully read my thesis and unfailingly resolved my puzzles.

Mr. Gary Schwartz, who offered his time in correcting my thesis and shared my pleasure for the last year of my graduate studies.

Many people gave technical assistance to this project; I especially wish to mention Mrs. Winifred Heppler, Mrs. G. R. Bolz, and Mr. D. N. Voronin.

Finally, I would like to thank my family both in the U.S. and in Taiwan for their confidence in me and sharing the joy and worry with me during the past few years.

The financial support of the U. S. Atomic Energy Commission is greatly appreciated.

LEGAL NOTICE

This report was prepared as an account of work sponsored by the United States Government. Neither the United States nor the United States Atomic Energy Commission, nor any of their employees, nor any of their contractors, subcontractors, or their employees, makes any warranty, express or implied, or assumes any legal liability or responsibility for the accuracy, completeness or usefulness of any information, apparatus, product or process disclosed, or represents that its use would not infringe privately owned rights.

TECHNICAL INFORMATION DIVISION
LAWRENCE BERKELEY LABORATORY
UNIVERSITY OF CALIFORNIA
BERKELEY, CALIFORNIA 94720