LBL-29138
UC-210

Lawrence Berkeley Laboratory

UNIVERSITY OF CALIFORNIA

APPLIED SCIENCE DIVISION

Corrosion-Resistant Coatings for High-Temperature High-Sulfur Activity Applications: Final Report

J.R. Selman

June 1990

APPLIED SCIENCE DIVISION

LOAN COPY
Circulates
for 2 weeks
Bldg. 50 Library.
LBL-29138
Copy 2

Prepared for the U.S. Department of Energy under Contract Number DE-AC03-76SF00098.

DISCLAIMER

This document was prepared as an account of work sponsored by the United States Government. While this document is believed to contain correct information, neither the United States Government nor any agency thereof, nor the Regents of the University of California, nor any of their employees, makes any warranty, express or implied, or assumes any legal responsibility for the accuracy, completeness, or usefulness of any information, apparatus, product, or process disclosed, or represents that its use would not infringe privately owned rights. Reference herein to any specific commercial product, process, or service by its trade name, trademark, manufacturer, or otherwise, does not necessarily constitute or imply its endorsement, recommendation, or favoring by the United States Government or any agency thereof, or the Regents of the University of California. The views and opinions of authors expressed herein do not necessarily state or reflect those of the United States Government or any agency thereof or the Regents of the University of California.

LBL-29138

CORROSION-RESISTANT COATINGS FOR HIGH-TEMPERATURE HIGH-SULFUR ACTIVITY APPLICATIONS

Final Report

June 1990

by

J. Robert Selman

Illinois Institute of Technology
Chemical Engineering Department
Chicago, Illinois 60616

for

Technology Base Research Project
Applied Science Division
Lawrence Berkeley Laboratory
Berkeley, California 94720

This work was supported by the Assistant Secretary for Conservation and Renewable Energy, Deputy Assistant Secretary for Utility Technologies, Office of Energy Management, Advanced Utility Concepts Division of the U.S. Department of Energy under Contract No. DE-AC03-76SF00098, Subcontract No. 4559910 with the Lawrence Berkeley Laboratory.

Introduction.

The research described in this report is intended to assist in developing the technology for the production of molybdenum, molybdenum carbide and titanium nitride coatings. These coatings have the potential to serve as an alternative to present methods of protecting the metal parts, at positive potential, of high-temperature sulfur or sulfide batteries (e.g., chromizing).

This research project was prompted by the observation that only very few materials are corrosion resistant in a high-temperature high-sulfur-activity environment containing polysulfide or FeS_2. Among these materials only molybdenum has really satisfactory corrosion resistance. In LiCl-KCl eutectic containing FeS_2, titanium nitride has also shown adequate corrosion resistance. In polysulfide melts chromium shows good corrosion resistance, and chromizing is presently used to protect the internal surface of the containers in the sodium-sulfur battery, as manufactured at Chloride Silent Power Ltd. (C.S.P.L., Runcorn, U.K.).

It should be noted that the issue of an optimal coating for the sodium-sulfur battery container is somewhat clouded and may be resolved satisfactorily only when there is more information about the effect of very small amounts of dissolved metal, such as chromium or molybdenum, on the life of the sodium-beta-alumina electrolyte. Nevertheless, there is a clear incentive for exploring molybdenum, or molybdenum derivatives, and titanium nitride as alternative protecting materials.

Research Objectives.

The interest of molybdenum carbide coatings lies in the fact that they appear to be easier to prepare, by molten-salt electrodeposition, than coatings of molybdenum itself, whose density and adhesion to the substrate is critically dependent on keeping the melt completely free from moisture. Therefore, with respect to molybdenum carbide, the objectives of this research project are the following:

(1) Produce dense and pore-free molybdenum carbide coatings on low-carbon steel substrates, and demonstrate that such coatings have adequate corrosion resistance in the Na/S or Li/FeS_2 environment;

(2) Determine the effect of atmospheric moisture on coating quality and morphology;

(3) Investigate the mechanism of electrodeposition of molybdenum, and molybdenum carbide and, based on this, optimize the conditions for preparation of such coatings.

Earlier in this project, the electrodeposition of 5-35 μm thick Mo_2C coatings on a low carbon steel substrate with a 5 μm interlayer of Ni has been demonstrated (Fig. 1).

Methods of producing Mo, Mo_2C and TiN coatings by plasma-enhanced chemical vapor deposition are of interest because they may be capable of creating a different morphology at relatively low temperatures. Therefore, a particular research objective with

respect to all three materials is to investigate PE-CVD routes to produce dense, coherent coatings, which could be applied to relatively low-melting substrates such as aluminum. Progress made during the year 1989 is reported according to three tasks : (1) Optimized deposition of Mo_2C; (2) Preparation of Mo and TiN by PE-CVD; and (3) Corrosion resistance of Mo, Mo_2C and TiN coatings.

Task 1. Optimized Deposition of Mo_2C.

Characterization of molybdenum nucleation.

The reduction of trivalent molybdenum as hexachloromolybdate in a molten chloride electrolyte, has been reported to be a single step involving a three-electron transfer in an irreversible process (with cathodic-anodic peak potential separations of 300-600 mV at 1000°K). There are no direct data on the reduction of Mo(III) or higher valence states in alkali fluoride melts.

In this work, cyclic voltammetry (CV) and chronopotentiometry (CP) were used to investigate the reduction process of molybdate and of carbonate, and chronoamperometry (CA) was used to reveal details of the early stages of reduction and growth of molybdenum layers.

All experiments were carried out in a three-electrode cell which is shown schematically in Fig.2. The working electrode (WE) was a platinum wire: 0.025 cm dia for CV and CP and 0.1 cm dia for CA. The WE was immersed in the melt at 0.3 - 0.5 cm distance from a platinum flag (3 cm^2 area) quasi-reference electrode (PtQRE). The PtQRE has a known behavior in oxygen-containing melts, at temperatures ranging from 600°C to 900°C. A pyrolytic graphite crucible (25 cm^3) containing the melt also served the counter electrode (CE). The cell container was a quartz tube (one end closed), provided with a connection for inert gas (argon) and a cover to hold the electrodes in the desired positions.

Fig.3 shows that a reduction step occurs at -1.1 V (flat peak in CV) corresponding to an anodic peak at 0.0 V on the reverse sweep. The cathodic peak appears to be due to the partial reduction of Mo(VI) and alloying of molybdenum with the platinum cathode. At -1.4 V vs. PtQRE an increase in current signals the beginning of a new reduction process which appears to lead to the formation of Mo(III) in large quantities. Trivalent molybdenum is apparently formed in a two-electron process at a potential close to the potential of the final reduction step, so that only one major current peak is recorded in the potential range -1.4 to -1.9 V. A close examination of the CV indeed indicates a prepeak wave at -1.6 V, which is associated with an anodic peak at +0.1 V. The main molybdate reduction peak gives rise to an anodic stripping peak at -0.95 V, which is followed by the anodic peaks mentioned above. All those peaks which presumably involve Mo(III) show the expected linearity with the square root of sweep rate, indicating a diffusing reactant. Therefore, it is justifiable to propose for the final reduction step: $Mo(III) + 3e \rightarrow Mo(0)$. Overall, the CV data indicate that molybdenum is deposited in a three-electron quasi-reversible process involving a subsequent chemical reaction with molten FLINAK. In the highly alkaline melt zone close to the electrode surface such a reaction would probably produce oxyfluorides. This may explain why layers of molybdenum thicker than 5-7 μm are difficult to plate.

Chronopotentiograms were taken at 100 mA current. As shown in Fig.4, an initial maximum is observed in the transients, which may result from a crystallization overpotential. If the cathodic pulse is extended to 20 seconds, no transition is observed other than that due to alkali metal deposition. When the current is reversed

before the onset of alkali metal deposition, a transition time is first observed for the reoxidation of deposited Mo, and a second transition corresponding to the oxidation of Mo(III) to a higher valence state. The Sand equation is satisfied, indicating a diffusion-controlled process. If a totally irreversible process is assumed, a value of n = 2 is obtained from a semi-log plot, while the assumption of a reversible reaction with a soluble product yields n = 1.75. These values are both close to those obtained from CV data.

Molybdenum, as a Group VIB transition metal, may exhibit a variety of oxidation states but its compounds have not been well characterized. Low-valence states of molybdenum can undergo disproportionation by both homogenous and heterogenous reactions. Electrochemically produced Mo(V) and Mo(III) are probably involved in such reactions. In a hypothetical scheme involving Mo(IV) and Mo(V) each mole of Mo(VI) would produce 3/8 moles of Mo(III). The total concentration of Mo(III) species can be estimated based on such an assumption. This then leads to a diffusion coefficient of Mo(III) of 7.3×10^{-5} cm^2/s, which is an acceptable value for a molten salt system at 600°C. In conclusion, the CP analysis shows that molybdenum deposition is a quasi-reversible process under diffusion control with a slightly soluble Mo product.

Specific electrolysis parameters for molybdenum deposition.

Molybdenum coatings up to 10 μm thick were plated from FLINAK containing alkali (Li, K) molybdate. The following electrolysis conditions were used:

Electrolyte composition, w/o :

Li_2MoO_4..... 5-10
FLINAK: LiF-NaF-KF eutectic (29-11-60).... balance
Temperature, °C..... 760-800
Ambient atmosphere, ppm :
Oxygen, Water..... 10
Argon, dry..... balance
Current density, mA/cm^2..... 50-75
Current efficiency, % 40-60
Substrate material ..... LCS/Ni

Literature Review : Alternative bath compositions.

Various efforts have been made to produce Mo coatings from molten salts or non-aqueous solutions that would allow lower temperatures than those necessary for the fluoride bath (700-800°C). A chloride bath containing heavy alkali (Cs+) or divalent (Zn++) metal cations has been thoroughly investigated by White and Twardoch [1]. They concluded that molybdenum may be plated from such baths in spite of the complicated solution chemistry, but that it is difficult to quantitatively predict the optimal conditions for plating. Electrolytes based on molten fluoroborates have been investigated by Clayton, et.al [2]. However, reduction at temperatures around 400°C does not result in a refractory metal deposit. Alkali-metal metaphosphate/fluoride systems have been used for electrodeposition at temperatures at or below 600°C [3]. Takei

[4] has used organic solutions of molybdenum to electrodeposit this metal. Molybdenum and its oxide have been codeposited from a bath containing phosphomolybdic acid, citric acid, NH4Cl, hydrogen peroxide and formamide. In addition, low-melting chloroaluminates or chlorozincates appear attractive for refractory metal deposition. However, little is known about the molybdenum-carbon interaction in such melts at relatively low temperatures.

Characterization of Mo_2C nucleation.

As a preliminary step towards understanding the mechanism by which carbon atoms are supplied to the electrode surface for subsequent reaction with molybdenum, the reduction of carbonate ion in molten FLINAK was undertaken. The cyclic voltammogram at 600°C (Fig.5) is similar to that obtained by Deanhardt, Stern and Kende [5] and shows no carbonate reduction peak before the reduction of alkali metal ion (observed as a sharp increase of the current starting at about -1.8 V). At 700°C the current increases steadily from about -1.2 V onwards, and two peaks develop during the reverse sweep, of which at least one may be attributed to re-oxidation of the deposited carbon. At 800°C the current corresponding to carbonate reduction increases more steeply than at 700°C, and at a more anodic potential (-1.0 V). The re-oxidation peak is also larger than at 700°C.

Fig.6 shows that solutions of molybdate and carbonate in molten FLINAK produce reducible carbon species besides the molybdenum species already mentioned. Both Mo- and C-containing species are reduced in the same potential range between -1.6 and -1.8 V vs. PtQRE. On the reverse sweep two overlapping peaks around -1.0 V indicate separate reoxidation of the two elements. Therefore, it appears that at 600°C these elements are not able to react and form the carbide.

When the temperature is increased, a marked change is observed at 800°C, with the appearance of a new peak on the reverse sweep, anodic of both the molybdenum and carbon oxidation peaks. This is an indication that at temperatures of 800°C and above, the molybdenum carbide formed by chemical reaction between the elements, is oxidized electrochemically. At 850°C the peak in the reverse (anodic) sweep, which was attributed to the oxidation of carbide, becomes more pronounced, and merges with the neighboring molybdenum and carbon oxidation peaks. This evolution is in agreement with the observed rapid growth of molybdenum carbide layer at temperatures exceeding 800°C.

Electrolysis parameters for molybdenum carbide deposition.

Molybdenum carbide coatings up to 35 μm were plated from FLINAK containing alkali molybdate (Li) and carbonate (K). The following electrolysis conditions were used:

Electrolyte composition, w/o :

Li_2MoO_4 5-10
K2CO3 10-20
FLINAK: LiF-NaF-KF eutectic (29-11-60).... balance
Temperature, °C 800-850

Ambient atmosphere, ppm :

Oxygen	50-100
Water	10
Argon	balance
Current density, mA/cm^2	50-100
Current efficiency, %	60-80
Substrate material	LCS/Ni

Molybdenum-carbon interaction during deposition.

A comparative study of nucleation and growth of molybdenum layers was carried out in two batches of FLINAK melt, one containing molybdate and the other containing molybdate and carbonate. Single potential-step experiments were carried out at 600°C using a platinum wire electrode. From Fig.7 it is apparent that the transients in the FLINAK-molybdate melt show a linear dependence of i on $t^{1/2}$, indicating a mass-transfer controlled growth characterized by a hemispherical diffusion flux. Usually, the product $cD^{1/2}$ may be directly extracted from the i vs. $t^{1/2}$ plots for high overpotentials, in which case the entire surface is covered rapidly with nuclei forming a layer, thereby establishing linear diffusion practically from the beginning. However, in the present case, a hump on the falling curve obscures the region from which the diffusivity may be calculated.

Values of i_{max} and t_{max} were obtained from current transients and the experimental product $(i_{max})^2 t_{max}$ then calculated. The latter is approximately constant. A preliminary analysis of the rising parts of the transients suggests the growth of two-dimensional centers randomly nucleated.

Addition of carbonate to the FLINAK-molybdate melt introduces only minor differences in the recorded transients. Values of the product $(i_{max})^2 t_{max}$ are fairly constant with overpotential, and agree well with the values for the FLINAK-molybdate melt. Nevertheless, the lower i_{max} and higher t_{max} values indicate the presence of a second surface process which may be the carbonate coreduction observed in CV experiments. Since the above experiments were carried out at 600°C, no reaction between elemental molybdenum and carbon is expected.

Potential-step experiments were also carried out at, and above 750°C, but the instrument response time at such high temperatures is inadequate to resolve the high rate of nucleation. Only CV experiments provide information on the molybdenum and carbon reaction. Its occurrence could be inferred from the appearance of a single peak for the reoxidation of carbide on the reverse (anodic) sweep.

Task 2. Preparation of Mo and TiN by PE-CVD.

Design of the PE-CVD system

The PE-CVD system to be used in this project (Fig. 8) was constructed from parts purchased or fabricated by independent supliers. New components were added to the reaction chamber, and the work area was remodeled to satisfy various safety regulations concerning the use of toxic gases. The installation of safety equipment for the processing of the exhaust chemicals has also been completed.

In this project, a molybdenum deposit will initially be prepared using molybdenum carbonyl as precursor. A bypass inlet gas configuration situated close to the reaction chamber has been used [6] to introduce molybdenum carbonyl vapor in a stable plasma discharge. However, this inlet configuration is bulky and inconvenient to operate.

Advantage can be taken of the narrow temperature range required to create an adequate argon/carbonyl mixture if the carrier gas is allowed to pass over the solid carbonyl at the right temperature, resulting in a compact inlet system. From the available data on molybdenum-carbonyl vapor pressures, sufficient concentrations for a 0.1 - 10 Torr total pressure range can be obtained by maintaining the inlet argon gas temperature between 10 and 50°C. In our compact design, the small reservoir is easy to remove and to store safely, in a larger container.
Before introduction into the carrier gas line (and during the initial system adjustment) the reservoir is kept below 0°C.

Mo-films : Alternative reactant gases

Recent information on a low temperature procedure [7] has been used to modify the reactive gas inlet and the substrate mask. According to Wilson et al. [7] molybdenum could probably be deposited by reacting MoF_6 with hydrogen and silane to avoid attack by fluorine on substrate and chamber components. This procedure has been demonstrated for tungsten deposition, in which case the silane was injected directly on to the substrate surface.

Organometallic synthesis routes are also being sought, and recent results [8] indicate that an allyl-derivative could be used to produce molybdenum coatings at lower temperatures than from the alkyl-derivatives previously used.

TiN-films : Temperature considerations

TiN is a brittle material which, like all refractory metal carbides and nitrides, is a crystalline solid if produced by CVD at temperatures exceding 1000°C. The same materials can be prepared as an amorphous film if a low-temperature process can be applied. Amorphous films are expected to be resistant to intergranular corrosion which is characteristic of polycrystalline samples. Organometallic precursors with specific physico-chemical properties are suitable for producing such changes in the local atomic environment. Low temperature deposition (around 250°C) may be achieved with precursors selected according to following the criteria:
(1) thermal decomposition must occur at sufficiently low temperatures;
(2) the precursor must be of metal-organic ligand type, the bond being of donor-acceptor type, i.e., more stable than the internal bonding among different atoms of the ligand. An example of such a precursor is $Ti(neopentyl)_4$ with a reported decomposition temperature at 150°C.

Task 3. Corrosion Resistance of Mo, Mo_2C and TiN Coatings.

Corrosion of the coatings in polysulfide melts.

Currently, the stability of refractory coatings is determined in polysulfide melts at 330°C by cyclic voltammetry during a 100-hour test. The principal feature of this test is the use of dynamic polarization which simulates a real cell environment. Fig.9 shows a corrosion test of Cr in a polysulfide melt. For comparison, the voltammograms of a similar test on a deposit of Mo_2C are shown in Figs. 10a and 10b, demonstrating the suitability of the coating.

An a.c. impedance system has been set up and materials for corrosion tests in chloride melts purchased. Continued preparations for a new series of corrosion tests include the design and fabrication of working electrodes to be plated by PE-CVD. The electrodes, which accommodate flat samples, will also facilitate post-test examination using SEM.

Cooperation with Na/S battery developers.

To allow a preliminary evaluation of the coatings developed in this program, it was agreed that IIT will provide samples for testing by battery developers. Internal coatings of molybdenum carbide were produced on a number of cell containers supplied by Chloride Silent Power Ltd., Runcorn, U.K. A first shipment of such cans was delivered in December 1989.

Work on plating molybdenum carbide on 1/4 in dia. rods of stainless steel is in progress. These samples will be tested at Argonne National Laboratory. The plating cell has to undergo some small modifications to accommodate long cylindrical samples.

General.

A paper was presented at the 40th Meeting of the International Society of Electrochemistry, Kyoto, Japan, September 17, 1989, having the following title:

"Molten Salt Electrodeposition of Refractory Metal Carbide. Part II. Mechanism and Nucleation Studies"
by D. Topor and J.R. Selman.

References.

[1] S.H. White and U.M. Twardoch, Abstr. #789, Ext. Abstr., 83 (Part 2), 1983.
[2] R.F. Clayton, G. Mamantov and D.L. Manning, J. Electrochem. Soc., 120 (1973) 1199.
[3] D. Elwell, J. Electrochem. Soc., 125 (1978) 1894.
[4] T. Takei, Surf. Technol., 9 (1979) 285.
[5] M.L. Deanhardt, K.H. Stern and A. Kende, J. Electrochem. Soc., 133 (1986) 1148.
[6] F. Okuyama, Appl. Phys.,22 (1980) 39.
[7] T.B. Gorczyca, L.R. Douglas, B. Gorowitz and R.H. Wilson, J. Electrochem. Soc., 136 (1989) 2766.
[8] R.R. Thompson and J.M. Park, J. Electrochem. Soc., 135 (1989) 1661.

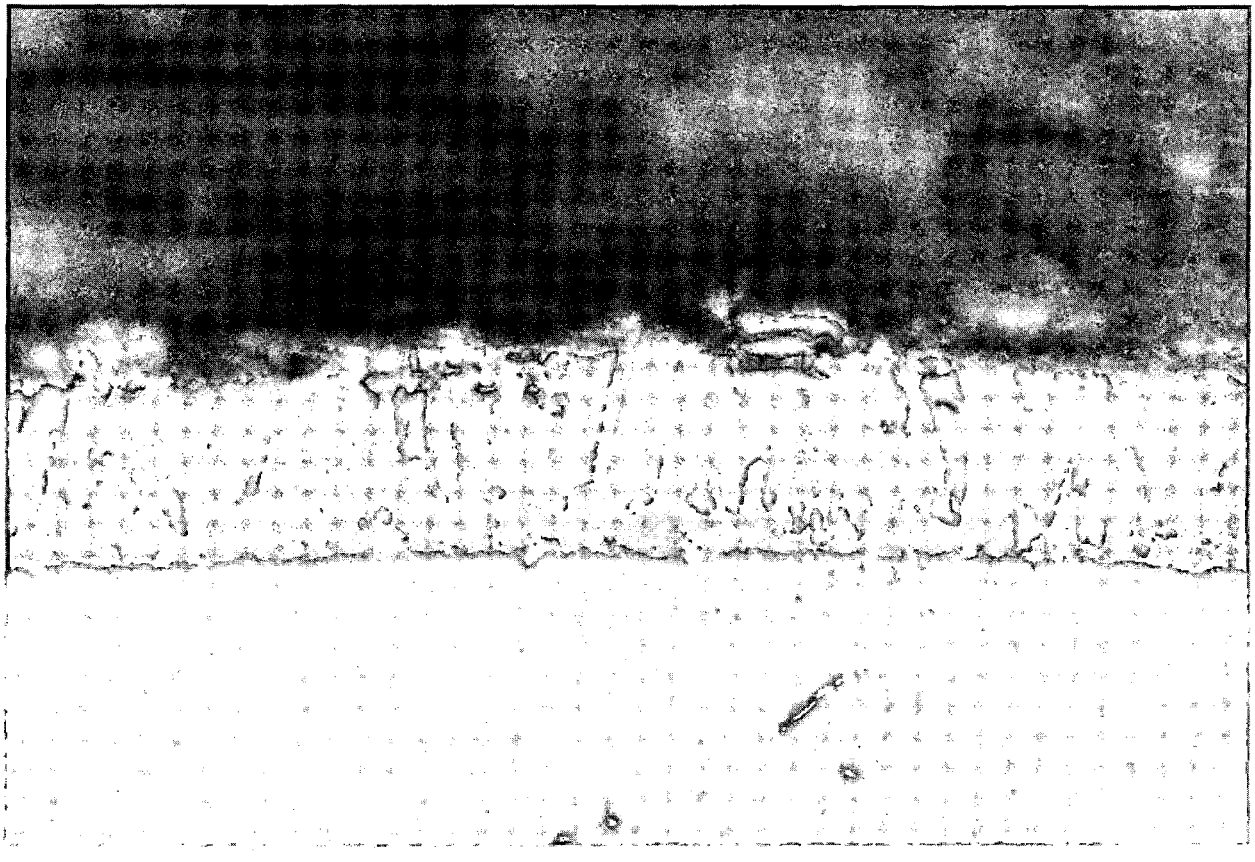

Fig. 1. Texture of Mo_2C layer (35 micron) on nickel substrate.

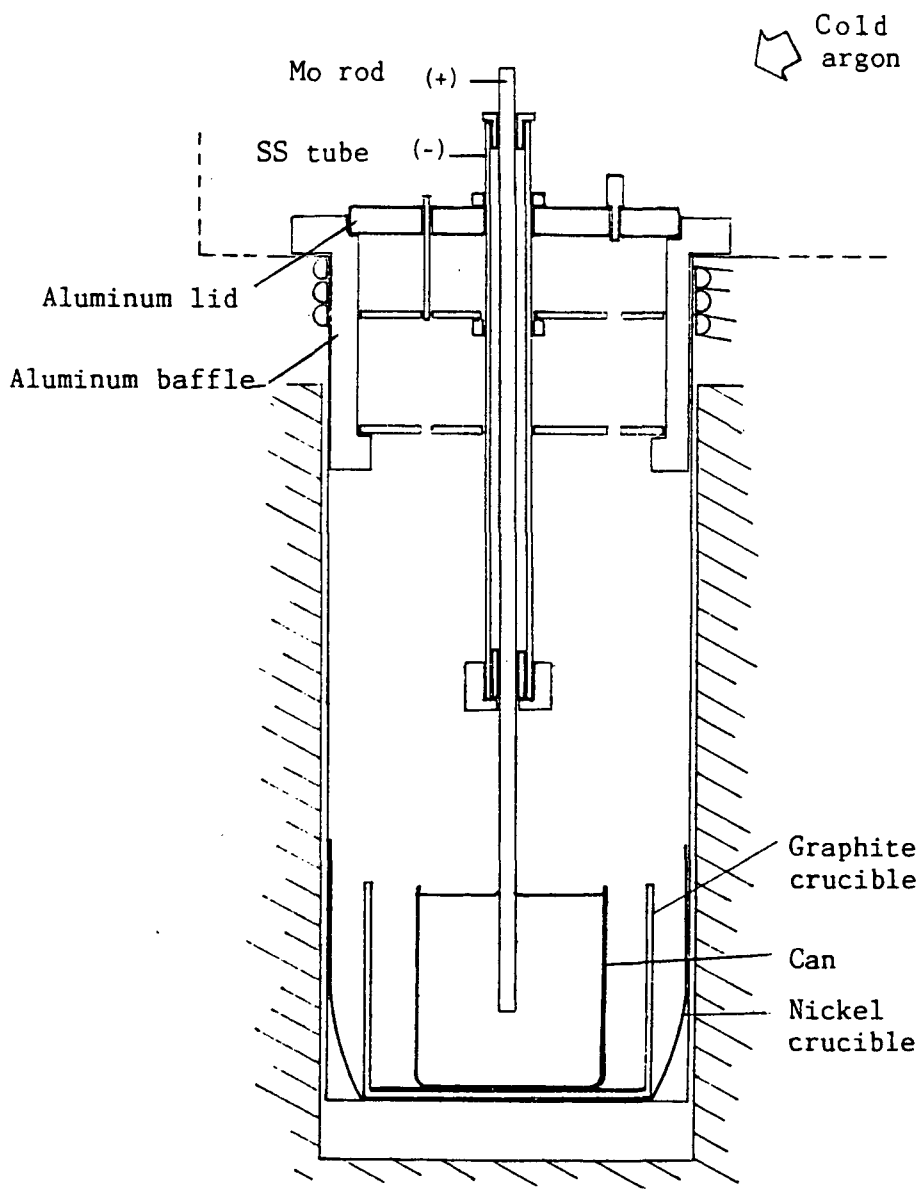

Fig. 2. Schematic of experimental cell assembly for internal coating of CSPL containers.

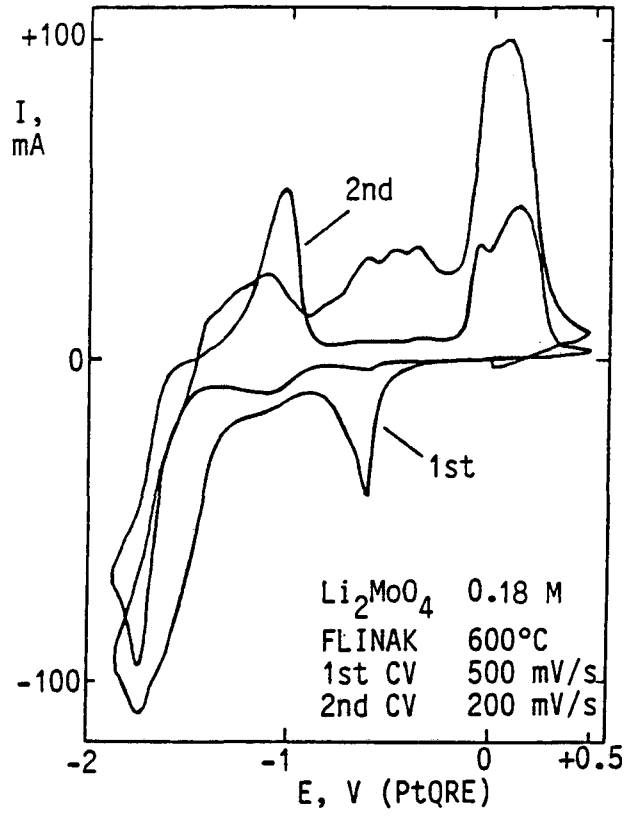

Fig. 3. Cyclic voltammograms of molybdate ion in molten FLINAK

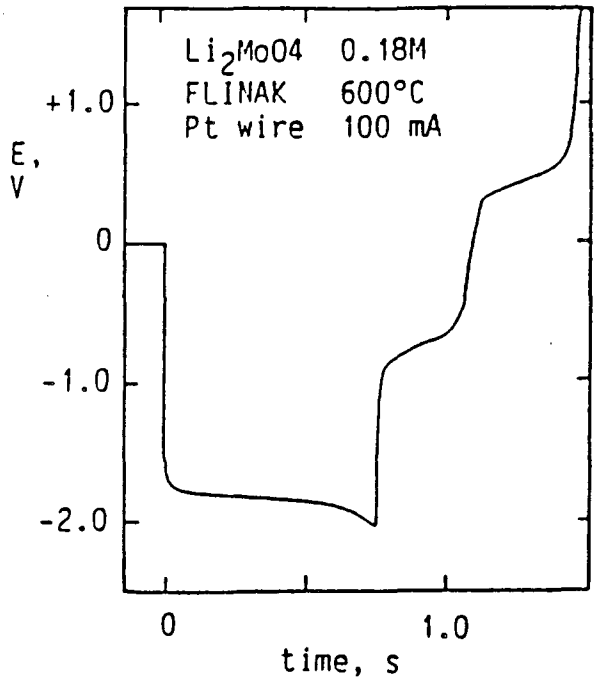

Fig. 4. Chronopotentiogram of lithium molybdate in molten FLINAK at 600 °C.

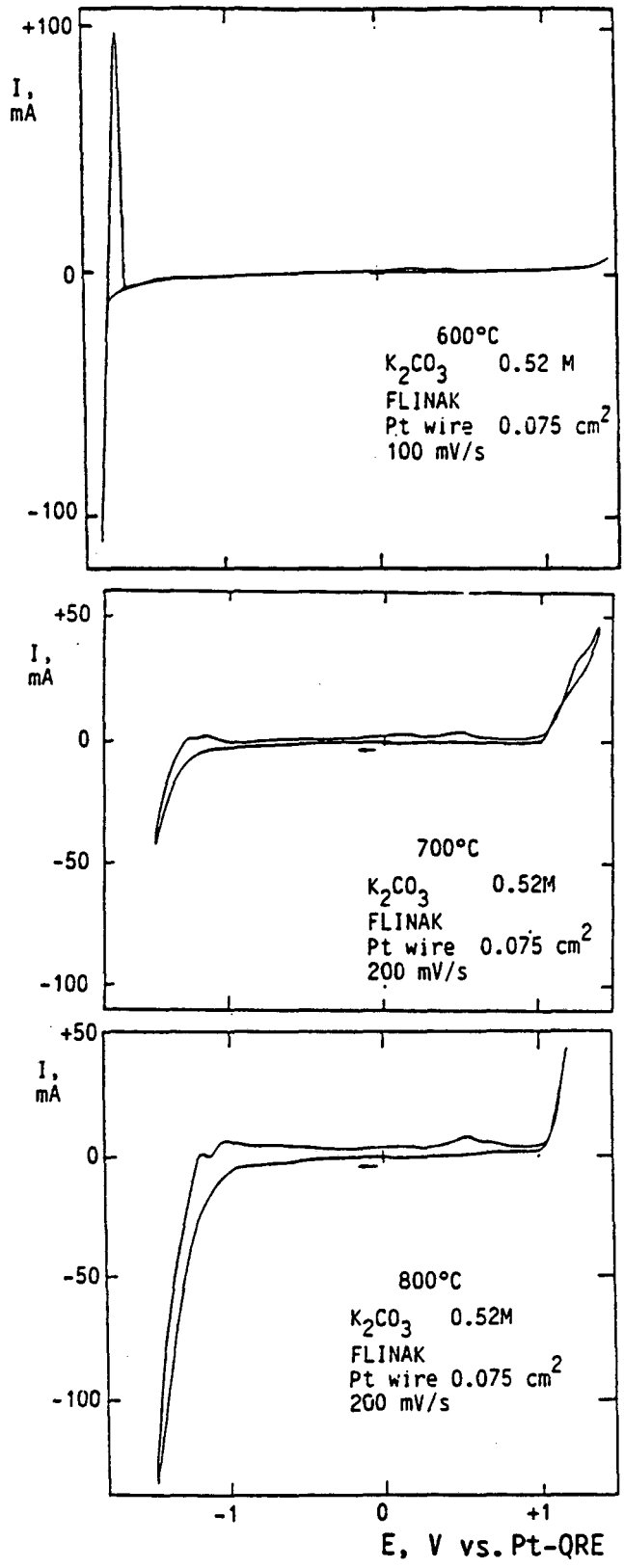

Fig. 5. Cyclic voltammograms of carbonate ion in molten FLINAK at a platinum electrode.

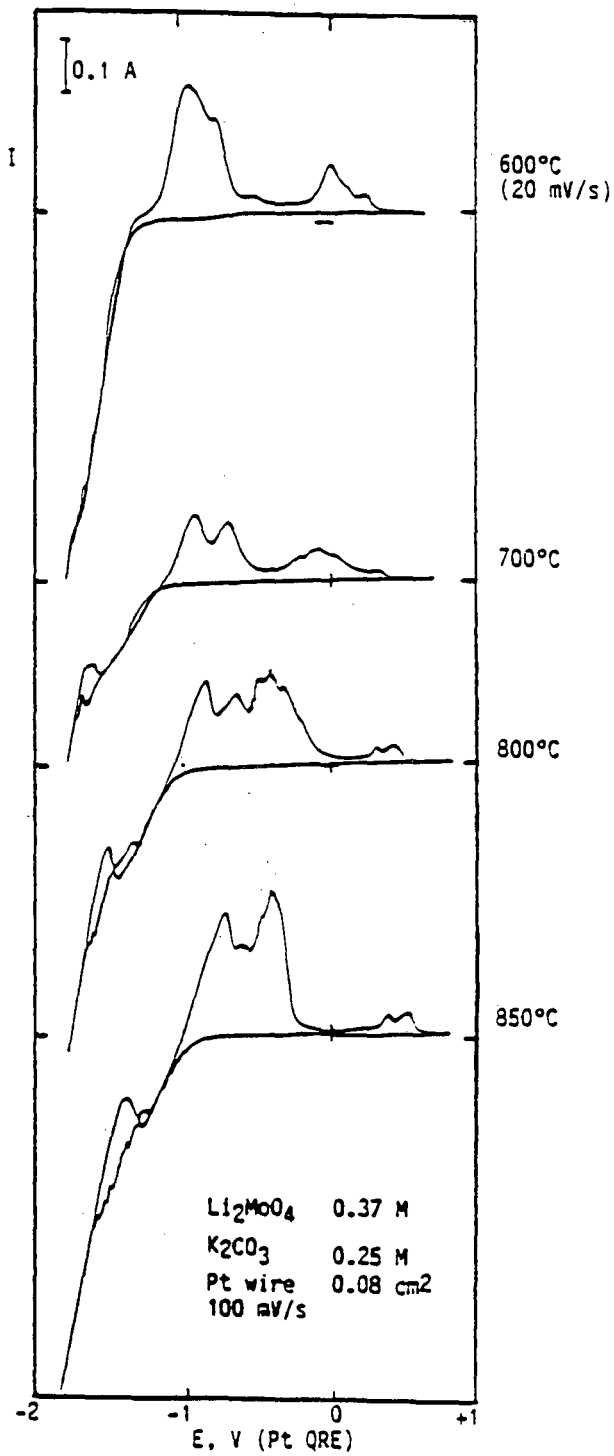

Fig. 6. Effect of temperature on the voltammograms in the molten Li_2MoO_4- K_2CO_3- FLINAK system.

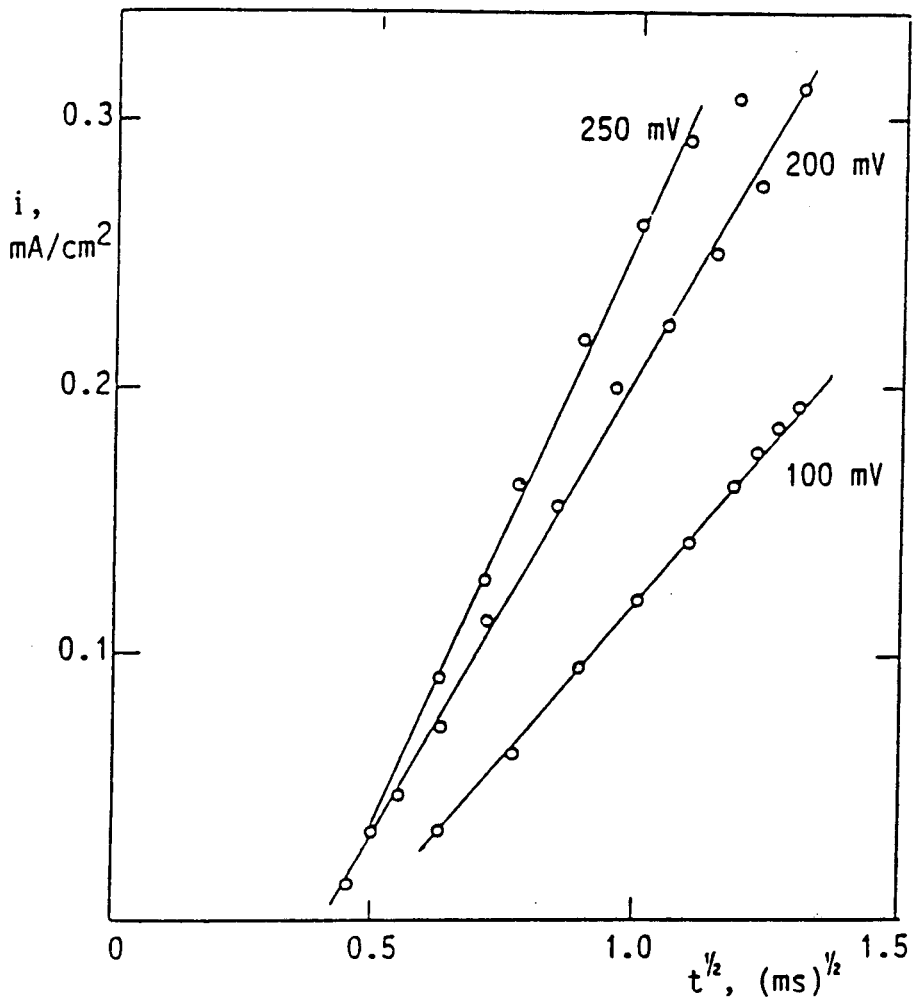

Fig. 7. Dependence of transient current on $t^{0.5}$ following potential steps in a FLINAK-Molybdate melt at 600°C.

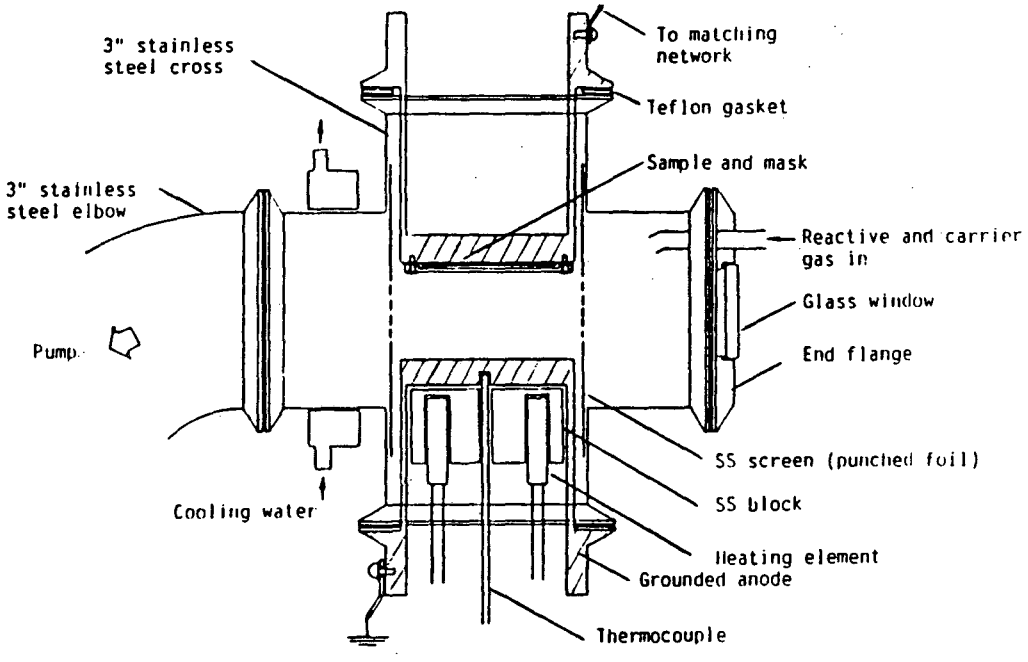

Fig. 8. Schematic of the PE-CVD reaction chamber.

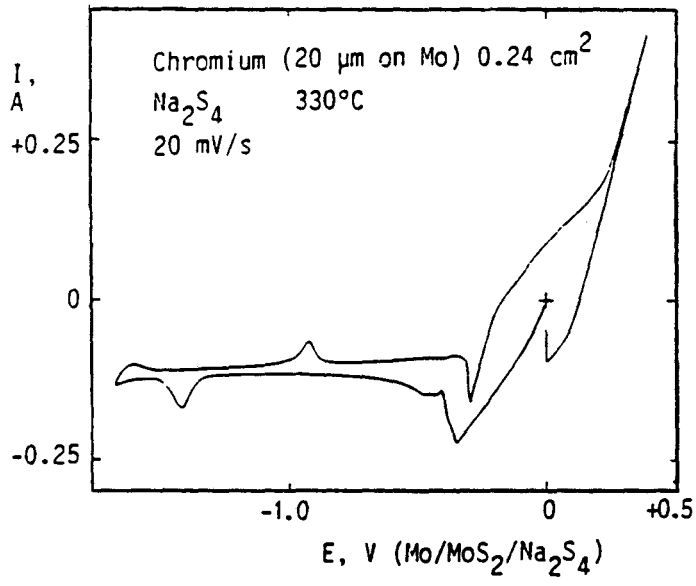

Fig. 9. Cyclic voltammogram of a chromium layer in sodium polysulfide melt at 330°C.

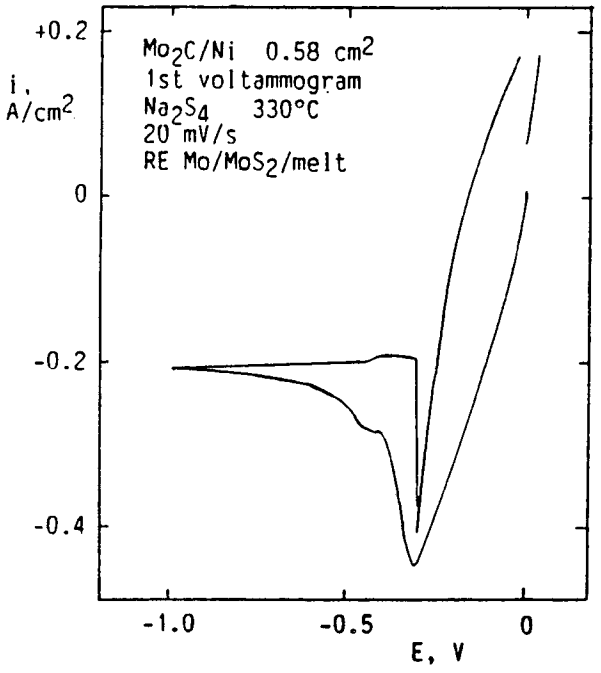

Fig. 10a. Cathodic voltammogram at Mo_2C in molten sodium polysulfide at 330°C.

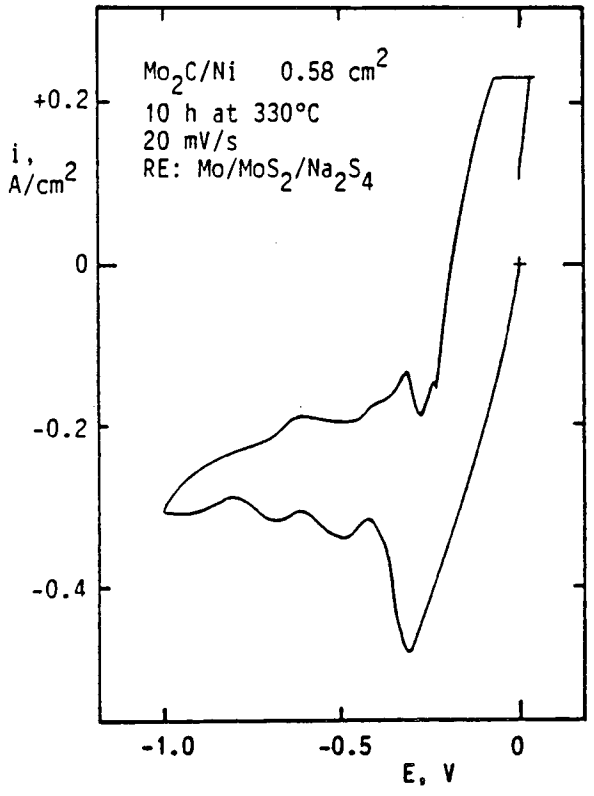

Fig. 10b. Cathodic voltammogram on same sample after 10 hours of exposure to polysulfide melt.

LAWRENCE BERKELEY LABORATORY
UNIVERSITY OF CALIFORNIA
INFORMATION RESOURCES DEPARTMENT
BERKELEY, CALIFORNIA 94720