Talk presented at the Nobel Symposium
on "Superheavy Elements, Theoretical
Predictions and Experimental Generations,"
Ronneby, Sweden, June 10-14, 1974.

LBL-2928

C.2

NUCLEAR COLLISIONS WITH FRICTION

C. F. Tsang

May 1974

Prepared for the U. S. Atomic Energy Commission
under Contract W-7405-ENG-48

TWO-WEEK LOAN COPY

This is a Library Circulating Copy which may be borrowed for two weeks. For a personal retention copy, call Tech. Info. Division, Ext. 5545

LAWRENCE BERKELEY LABORATORY
UNIVERSITY OF CALIFORNIA
BERKELEY

LBL-2928

C.2

DISCLAIMER

This document was prepared as an account of work sponsored by the United States Government. While this document is believed to contain correct information, neither the United States Government nor any agency thereof, nor the Regents of the University of California, nor any of their employees, makes any warranty, express or implied, or assumes any legal responsibility for the accuracy, completeness, or usefulness of any information, apparatus, product, or process disclosed, or represents that its use would not infringe privately owned rights. Reference herein to any specific commercial product, process, or service by its trade name, trademark, manufacturer, or otherwise, does not necessarily constitute or imply its endorsement, recommendation, or favoring by the United States Government or any agency thereof, or the Regents of the University of California. The views and opinions of authors expressed herein do not necessarily state or reflect those of the United States Government or any agency thereof or the Regents of the University of California.

LBL-2928

NUCLEAR COLLISIONS WITH FRICTION*

C. F. Tsang

Lawrence Berkeley Laboratory
University of California
Berkeley, California 94720

*Work performed under the auspices of the U. S. Atomic Energy Commission.

NUCLEAR COLLISIONS WITH FRICTION

C. F. Tsang

Lawrence Berkeley Laboratory
University of California
Berkeley, California 94720

May 1974

Abstract

A theory of nuclear collisions where a frictional force is introduced explicitly from the beginning is worked out based on a macroscopic and leptodermous idealization. A solution of the problem is made by freezing all degrees of freedom but four: the distance between centres of the colliding nuclei, the angle of rotation of a line joining the centres and the two angles measuring the spins of the nuclei. The condition for capture as a function of energy and angular momentum is discussed in detail. Results on the kinetic energy and angle distributions of collision products are also obtained.

In the past few years, the study of collisions between complex nuclei [1] has called attention [2] to the need for a collision theory where frictional forces are present, which are capable of dissipating energy, i.e., converting energy of collective degrees of freedom into heat — internal microscopic (nucleonic) degrees of freedom. Various attempts [3] have recently been made in this direction. The present paper[1] is concerned with a study of collisions between some of the simplest idealized systems where dissipative effects are taken into account explicitly from the beginning. The general framework in which we approach the problem has been discussed in some detail in the last talk[2]:

(a) Macroscopic and leptodermous [4] idealization.

(b) Freezing all but a few of the degrees of freedom.

Thus, we describe the collective or gross behaviours of the collision, not in terms of individual nucleons (the microscopic approach), but in terms of macroscopic degrees of freedom, such as the shape, angular velocities and the distance between the two bodies. The preference of this approach over the microscopic approach is obvious in the case of a brick sliding on a rough surface. In the case of collisions between two heavy ions, this approach has recently been found to be quite fruitful.

The solution of a dynamic problem with N degrees of freedom yields, in general, N coupled differential equations, which is easy to solve only if N is small. In our study we made the important

---

[1] The present work is done in collaboration with W. J. Swiatecki.

[2] W. J. Swiatecki, Aspects of heavy ion dynamics , these proceedings.

idealization that the shapes of the two colliding nuclei are frozen to be spheres and consider as most important only four degrees of freedom: the distance, r, between the two nuclei, the angle of rotation, θ, of the line joining their centres, and the angles of self-rotation of the two nuclei, θ_1 and θ_2, respectively. (See Fig. 1a.) We shall mention at the end of the paper the possibility of unfreezing some other degrees of freedom. However, for the present paper we shall not go into such discussions. Instead we shall calculate in full detail, within this idealized model, energy and angular distributions and energy dissipation as functions of incident energy and target-projectile choice. It needs to be emphasized that quantitative agreements with experimental data are not expected and we shall attempt to make the broadest comparison with experimental observation to see if the main features are reproduced at all.

Having defined the degrees of freedom, we have to specify the forces involved: The conservative forces are

1) Coulomb force
2) Nuclear Proximity force

Besides these two forces, there is also the centrifugal "force" for which, in our present calculations, we have used formulas of moments of inertia corresponding to rigid bodies though we could have used other formulas for them. The second force listed above, nuclear proximity force, has been discussed in some detail in the last talk. In our

simplified picture it appears as an attractive force set in when the two bodies come into contact with a strength of $4\pi R_r \gamma$ where $R_r = R_1 R_2/(R_1 + R_2)$ and γ is the surface tension coefficient whose value can be extracted from a nuclear mass formula. The force will become repulsive as the two bodies penetrate each other (with the overlap region having a density doubling the normal value).

For the dissipative force, we have assumed the following form:

$$F = -k \int \rho_1 \rho_2 \vec{u}_{12} \, d\tau \tag{1}$$

where the volume integral is over the overlap region, ρ_1 and ρ_2 are the densities due to projectile and target nuclei, respectively, $\vec{u}_{12}$ is the relative velocity at each point, and k is the frictional coefficient. This frictional coefficient is the only parameter occurring in the problem. It may be remarked here that tangential friction and radial friction will appear naturally from this definition of a frictional force and there is no need to introduce two parameters to describe their strengths independently. The above formula assumes a delta function type of friction, i.e., the volume element due to one nucleus rubs that due to the other only when they are at the same location. It is possible to introduce a range into the formulation in which the two volume elements experience a frictional force that decreases with their separation. However, we have not introduced this complication and have used the formula as shown above.

It is well known that equations of motion under conservative forces may be written down by means of Lagrangian (or Hamiltonian)

method. With dissipative forces, a method known as the Lagrangian-Rayleigh method [5] may be employed with dissipation described by what is called a Rayleigh function. Now in our case the Rayleigh dissipation function may be written down in a straightforward way from our definition of the frictional force, and the equations of motion are thus obtained.

Instead of going through the mathematical details, let me write down the final equations of motion

$$M_r\ddot{r} - \frac{L^2}{M_r r^3} + k\rho_o^2 V\dot{r} = -\frac{\partial \mathcal{V}}{\partial r} : \quad \text{Force(Coulomb + Proximity)} \tag{2}$$

$$\dot{L} = -(\dot{L}_1 + \dot{L}_2) \tag{3}$$

$$\dot{L}_1 = +k\rho_o^2 V[g_2(\dot{\theta}_2 - \dot{\theta}) + g_1(\dot{\theta}_1 - \dot{\theta})]g_1 + k\rho_o^2 Vb^2(\dot{\theta}_1 - \dot{\theta}_2) \tag{4}$$

$$\dot{L}_2 = +k\rho_o^2 V[g_2(\dot{\theta}_2 - \dot{\theta}) + g_1(\dot{\theta}_1 - \dot{\theta})]g_2 - k\rho_o^2 Vb^2(\dot{\theta}_1 - \dot{\theta}_2) \tag{5}$$

where M_r is the reduced mass of the system; L, L_1, and L_2 are the angular momenta corresponding to θ, θ_1 and θ_2; V is the volume of the overlap region; ρ_o is the nuclear matter density and g_1 and g_2 are the arm lengths from the centers of the two spheres to the center of mass of the overlap region, respectively. The symbol b represents the radius of gyration of the overlap region around its center of mass (Fig. 1b).

The radial equation of motion, Eq. (2), is easy to understand. The three terms on the left-hand side represent the acceleration, centrifugal force, and dissipation in the radial direction, respectively.

Note the last term has the form recognizable from our definition of the frictional force. Equation (3) giving the conservation of angular momenta is also apparent. However, this equation has the important implication that the orbital angular momentum (θ degree of freedom) is not constant. Thus, if L_1 and L_2 are increased during the collision process due to friction (notice that in Eqs. (4) and (5), the driving force on the right-hand side of the equation is proportional to the frictional coefficient k), then L will be decreased, thus reducing the centrifugal force term in Eq. (2). The implication will be further discussed when we are presenting our calculation results.

Equations (4) and (5) are not difficult to understand. Let us first consider the first term on the right-hand side of either equation. By examining Fig. 1b, it can be seen that the expression in the square bracket, $[g_2(\dot{\theta}_2 - \dot{\theta}) + g_1(\dot{\theta}_1 - \dot{\theta})]$, represents nothing more than the relative tangential velocity of the two colliding nuclei in the overlap region. Thus, $k\rho_o^2 V[\ ]$ represents the tangential frictional force, which, when multiplied by the respective arm-lengths g_1 and g_2, gives the torques causing the time derivatives of L_1 and L_2. The second term on the right-hand side of either equation is one order of magnitude smaller than the first, i.e., by a factor of b^2/g_1^2 or s_1/R_1, where s_1 is the width of the overlap region. This term represents a little couple with arm-length b and proportional to the relative angular velocity $(\dot{\theta}_1 - \dot{\theta}_2)$. Its significance becomes apparent when one considers the two bodies rolling over each other, i.e., the relative velocity at the contact point of the two bodies is zero, or $g_2(\dot{\theta}_2 - \dot{\theta}) = g_1(\dot{\theta} - \dot{\theta}_1)$.

Then the first term is zero, and it is the small second term that resists the relative angular velocity $(\dot{\theta}_1 - \dot{\theta}_2)$. Thus, the first term may be called the "sliding friction", being friction against sliding leading to a rolling condition, and the second term, the "rolling friction", being the friction against rolling, causing the system to get stuck completely with $\dot{\theta}_1 = \dot{\theta}_2 = \dot{\theta}$.

Summarizing, it is the frictional force that transfers the initial orbital angular momentum L into the spin angular momenta L_1 and L_2, by means of a sliding fraction term which makes the two bodies roll on each other and by means of a (smaller) rolling friction term, which causes the two bodies to get stuck rigidly. Thus, the initial orbital angular momentum L is reduced, and so is the centrifugal force term in the radial Eq. (2).

The Eqs. (3), (4) and (5) can be combined into one, and we are left with two coupled differential equations, which are not difficult to solve numerically. Special simplification results if we assume that the rolling friction is negligible when compared with sliding friction, which is a reasonable assumption in the case of grazing interactions. In terms of the overlap distance s (measured "inward") given by $s \equiv R_1 + R_2 + r$, the orbital angular momentum is given by

$$L = L_o\left[\frac{5}{7} + \frac{2}{7}\, e^{-\frac{7}{2}\frac{k\rho_o^2}{M_r}\int_o^t V(s)\,dt}\right] \tag{6}$$

where L_o is the initial angular momentum. Thus, if the exponent goes to infinity, the angular momentum is exactly $\frac{5}{7}$ of the initial value

independent of the relative sizes of the projectile and target. This can actually be easily verified for any two spheres rolling on each other. There is now only one master equation to be solved:

$$M_r\ddot{s} + \frac{L_o^2}{M_r r^3}\left[\frac{5}{7} + \frac{2}{7}e^{-\frac{7}{2}\frac{k\rho_o^2}{M_r}\int_o^t V(s)dt}\right] + k\rho_o^2 V(s)\dot{s} = -\frac{\partial\vartheta}{\partial s} \tag{7}$$

where $V \approx \pi R_r s^2$ for small s and the right-hand side represents the Coulomb and proximity forces. We notice that in the case of a captured system, the quantity $k\int_o^t V(s)dt \to \infty$ and the centrifugal force is reduced by a factor of $(\frac{5}{7})^2 \approx \frac{1}{2}$. Here "capture" means rolling capture and not rigidly stuck. When the rolling friction is included, centrifugal force after capture is even less, except in the case where the projectile and target are of equal size, where the factor $(\frac{5}{7})^2$ stays the same.

Various further simplification of the equation can be made:

(a) Replacing Coulomb force by a constant, $\frac{Z_1 Z_2 e^2}{(R_1 + R_2)^2}$.

(b) Approximating the proximity force by $4\pi R_r\gamma(1 - \frac{s}{s_o})$ which implies a parabolic attractive well.

(c) Replacing $V(s) = \pi R_r s^2$ by a constant $\pi R_r \langle s^2 \rangle$. This particular simplification is rather drastic but it enables us to solve the problem analytically.

(d) One may further approximate the proximity force by dropping the second term using only $4\pi R_r\gamma$. This is probably applicable in the case of grazing reactions where $s/s_o \ll 1$.

In the results presented below, (a), (b), and (c) are always assumed, so that an analytic solution can be obtained. Assumption (d) was made only in the result shown in Fig. 5.

In Fig. 2 is shown a schematic picture of how the orbital angular momentum decrease affects the capture process. If the orbital angular momentum is frozen [6], and has very large values (greater than a value, sometimes known as Wilczynski's limit, L_w) there is no pocket or minimum in the potential energy curve and nothing can be captured. However, as the frictional forces convert orbital angular momentum into spins of the target and the projectile nucleus, one can come in with an orbital angular momentum greater than L_w and yet on the way out one would be seeing a lower angular momentum curve with a pocket in it. As mentioned above, if the final state corresponds to the two spheres rolling on each other, the limiting value of L_f is $\frac{5}{7} L_o$, where L_o is the initial orbital angular momentum, (with initial values of L_1 and L_2 being zero). Thus, we are led to the result that if $L_o > \frac{7}{5} L_w$, then the system will not see a pocket in the potential energy curve on the way out and no capture can take place. Conversely, $L_o < \frac{7}{5} L_w$ is a necessary (but not sufficient) condition for capture. In the case when rolling friction is operative, the final stuck system has all angular velocities equal $\dot{\theta} = \dot{\theta}_1 = \dot{\theta}_2$ and it is easy to verify that the necessary condition for capture is that

$$L_o < \frac{M_r (R_1 + R_2)^2 + \frac{2}{5} M_1 R_1^2 + \frac{2}{5} M_2 R_2^2}{M_r (R_1 + R_2)^2} \cdot L_w$$

which is exactly $\frac{7}{5} L_w$ for identical projectile and target nuclei (e.g., $^{84}Kr + ^{84}Kr$), but is larger for the collisions of unequal nuclei.

The results of calculation for $^{84}Kr + ^{84}Kr$ is shown in Fig. 3. The vertical and horizontal axes are respectively the radial kinetic energy, E^c_{rad}, and the rotational energy, E^c_{rot}, at the point of contact of the two nuclei. The unit of energy used is given by $E_{cr} = L_w^2/2M_r(R_1 + R_2)^2$. Since the incident energy E_{in} is given by $E_{in} = E^c_{rad} + E^c_{rot} + V_c$ where V_c is the Coulomb barrier, curves for constant incident energies are represented by straight lines with unit slope. Curves for different values[3] of frictional coefficient k' separates, on the left, a region of capture and, on the right, a region of either repulsion or bounced back by the inner wall of the potential well. Now take a given total incident energy and consider what happens as one increases the radial energy from zero (following a line of unit slope). At first the system has too much angular momentum and the potential curve does not have a well and nothing can be captured. However, as the radial energy is increased, frictional forces act more significantly, reducing the value of the orbital angular momentum as illustrated in Fig. 2, and the system will be captured. Now as one reaches a very high radial energy and a low angular momentum, even though there is a pocket in the potential energy curve, friction cannot dissipate sufficient energy and the system goes in and comes out over the barrier and no capture occurs. This effect would imply a lower cutoff in angular momentum to fusion probability (in addition to the upper cutoff discussed above). The ratio of the portion of the constant incident energy line

[3] In the dimensionless unit $\frac{1}{2} k\rho_o^2 V\sqrt{s_1/4\pi R_r \gamma M_r}$ with $s_1 = 1.25$ fm.

under the curve and that portion outside the curve projected to the horizontal axis gives the relative cross-sections of capture and non-capture reactions. This value decreases as one goes to a curve corresponding to a lower value of the frictional coefficient. In the limit of zero friction, nothing is captured. For the case of very large friction everything is captured ($\kappa' \geqslant 1$) with the limiting angular momentum $\frac{7}{5}$ the Wilczynski value, and rotation energy $(\frac{7}{5})^2 E_{cr}$.

A similar calculation is made for $^{40}Ar + ^{108}Ag$ case (Fig. 4). The only extra comment required here is that the limiting angular momentum for large κ' is $\frac{7}{5}$ the Wilczynski's value only when rolling friction is switched off. When it is included, the limiting angular momentum with the corresponding rotation energy is greater as indicated. However, the curves for small κ' are not much affected.

It was recently pointed out by Wilczynski [7] in studying the transfer products in ($^{40}Ar + ^{232}Th$) reaction that frictional forces are responsible for the reduction of the kinetic energy of the product as its angle of deflection is decreased from its grazing value. Figure 5 is such a plot with these quantities obtained from our calculation for three values of the frictional coefficient.[4] For the intermediate value $\kappa = 0.02$, it is seen that as the angle deviates from grazing towards negative values, the kinetic energy is decreased. Physically, as the projectile and target nuclei overlap, the nuclear interaction causes the angle of deflection to deviate from the grazing value, and at the same time the frictional force causes the kinetic energy to be reduced. Thus, for $\kappa = 0$, there is no frictional force, and the curve in Fig. 5 displays no decrease in energy. On the other hand, for a larger value of $\kappa = 0.2$,

---

[4] Here we have used also assumption (d) and the dimensionless unit of the friction coefficient has to be changed to $\hbar/\rho_o^2 (fm)^5$.

the decrease in kinetic energy is much faster, reaching a limiting value corresponding to the case where the spins of the two nuclei and the rotation of the whole system have the same angular velocity and there is no rubbing between the nuclei. By a comparison of this calculation with experimental measurement, we find that the frictional coefficient is required to be a surprisingly small number[5] $\kappa \sim 0.02$, the value for critical damping, in a potential well corresponding to our proximity force being $\kappa = 1$. We got some confirmation of this value when it occurred to us that we can apply our theory to the oscillation of neutron matter and proton matter of a nucleus in a giant dipole resonance. Using the value for the width of resonance energy to be about 4-5 MeV we obtain a value for $\kappa = 0.014$. We do not attach too much significance to the good agreement of the two determinations of the frictional coefficient. It is probably more of an accident, since a broader comparison of experiments will certainly be necessary to enable one to make a more definite statement.

In conclusion, we have made a calculation with an idealized model of heavy ion collision, in which friction is put in explicitly from the beginning. All properties of the collision processes can be evaluated completely from such a model. We have not yet made a comprehensive comparison with experimental data, nor have we compared our preliminary determination of the frictional coefficient with the values obtained by Gross and Kalinowski [8], Sierk and Nix [9], or Wieczorek, Hasse and Sussmann [10]. This is partly because the assumptions (c) and (d) used in the results presented should first be relaxed. More important, we feel that some of the degrees of freedom that has been frozen in our

[5] In units of $\hbar$fm, this number becomes $0.02 \times 49 \simeq 1$; that is, $k \simeq 1$ ($\hbar$fm).

calculation has to be un-frozen in order to include all qualitative features of the physical process. The most important one is probably the neck formation degree of freedom, which we find to have significant influence on our picture. Some thoughts have been put into this problem, and we expect that we will incorporate this degree of freedom in our next calculations.

References

1. See for example, Lefort, M., J. Phys. A 7, 107 (1974) and Blann, M., "Mechanisms of Heavy Ion Reactions From a Macroscopic Viewpoint", VI Warsaw University Summer School in Nuclear Physics, September 3-16, 1973.

2. Swiatecki, W. J. and Bjørnholm, S., Phys. Rep. 4, 325 (1972).

3. For example, Beck, R. and Gross, D. H. E., Phys. Letters 47B, 143 (1973); Gross, D. H. E. and Kalinowski, H., Phys. Letters 48B, 302 (1974); Davis, R. H., "Dissipative Capture in Heavy Ion Fusion", Florida State University preprint (1974); Sierk, A. J. and Nix, J. R., Contribution to Int. Conf. on Reactions Between Complex Nuclei, Nashville, Tennessee, June 10-14, 1974; Alonso, Carol, private communications (1974).

4. Tsang, C. F., University of California, Lawrence Berkeley Laboratory Report UCRL-18899, Thesis (1969); also Myers, W. D., Nucl. Phys. A204, 465 (1973).

5. Whittaker, G. T., Analytical Dynamics, Dover Publications, New York, 4th Edition (1944), p. 230.

6. Wilczynski, J., Nucl. Phys. A216, 386 (1973).

7. Wilczynski, J., Phys. Letters 47B, 484 (1973).

8. Gross, D. H. E. and Kalinowski, H., Phys. Letters 48B, 302 (1974).

9. Sierk, A. J. and Nix, J. R., private communication (1974).

10. Wieczorek, R., Hasse, R. W., and Sussmann, G., Third Int. Symp. on Phys. and Chem. of Fission, Rochester, New York, August 13-17, 1973.

Figure Captions

Fig. 1. (a) Defining the degrees of freedom; (b) Some notations used.

Fig. 2. Schematic picture of potential energy surfaces for heavy ion collision, illustrating effects of the decrease of orbital angular momentum due to friction.

Fig. 3. Possibility of capture for (^{84}Kr + ^{84}Kr) system as a function of rotational energy and radial kinetic energy above the Coulomb barrier. Different curves correspond to different magnitudes of the frictional coefficient. Capture occurs in the region on the left of each curve. Capture cannot occur for either too large a rotational energy or too large a radial energy. The dashed line indicates a locus of constant total energy.

Fig. 4. Same as Fig. 3, but for (^{40}Ar + ^{108}Ag).

Fig. 5. Kinetic energy of the final products, E_T, as a function of the deflection angle θ for the grazing reaction (^{40}Ar + ^{232}Th) for three values of the frictional coefficient.

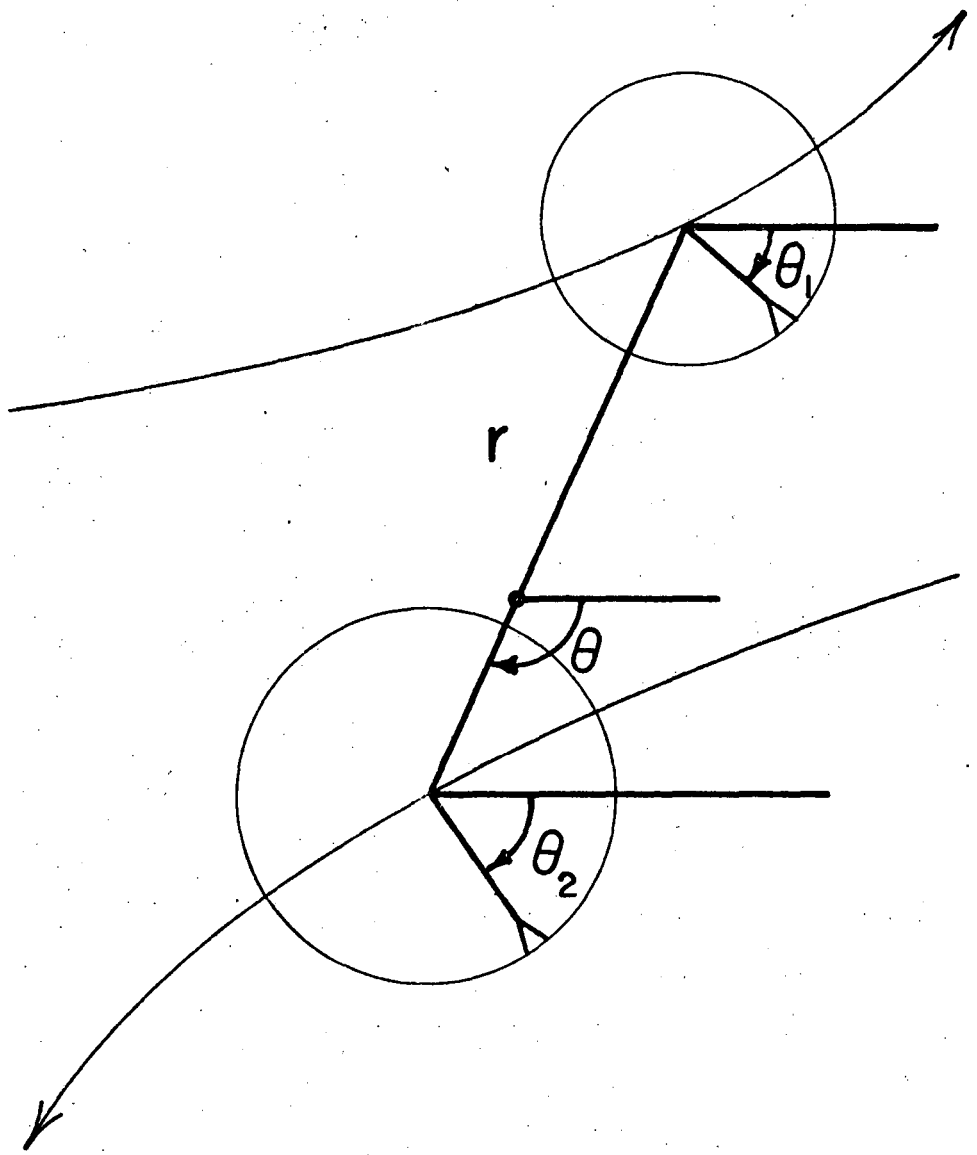

XBL745-3266

Fig. 1a

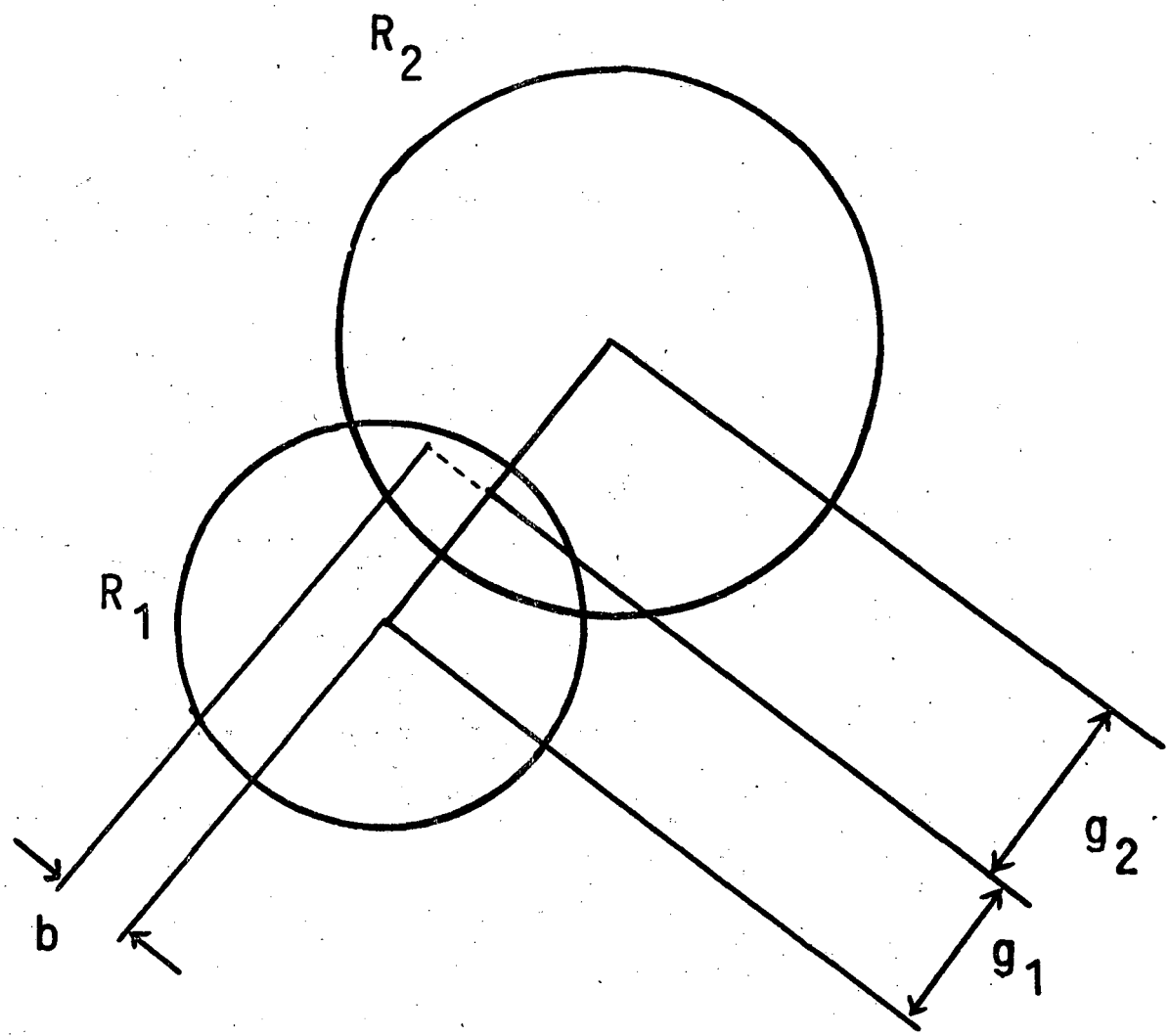

XBL 745-934

Fig. 1b

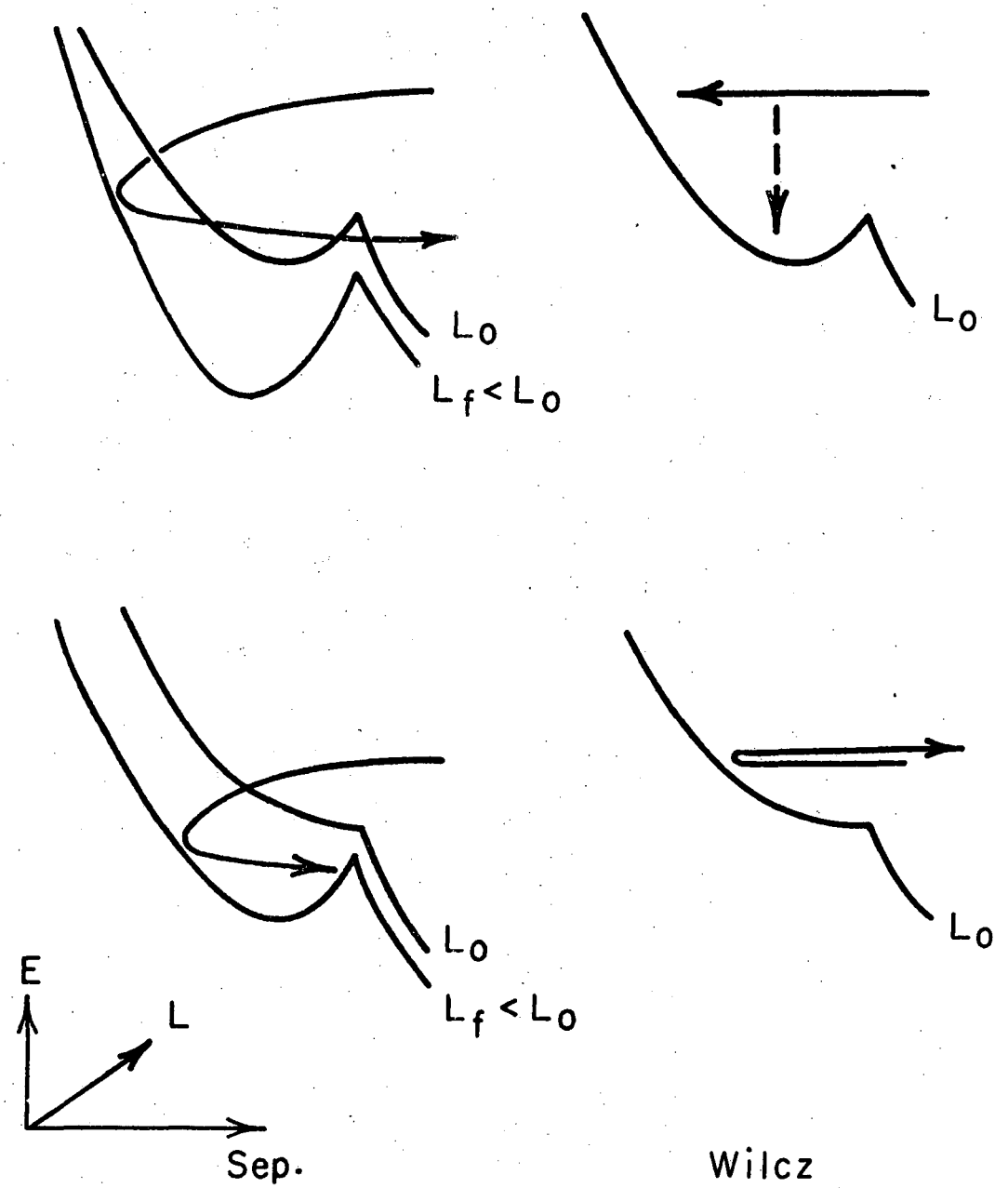

Fig. 2

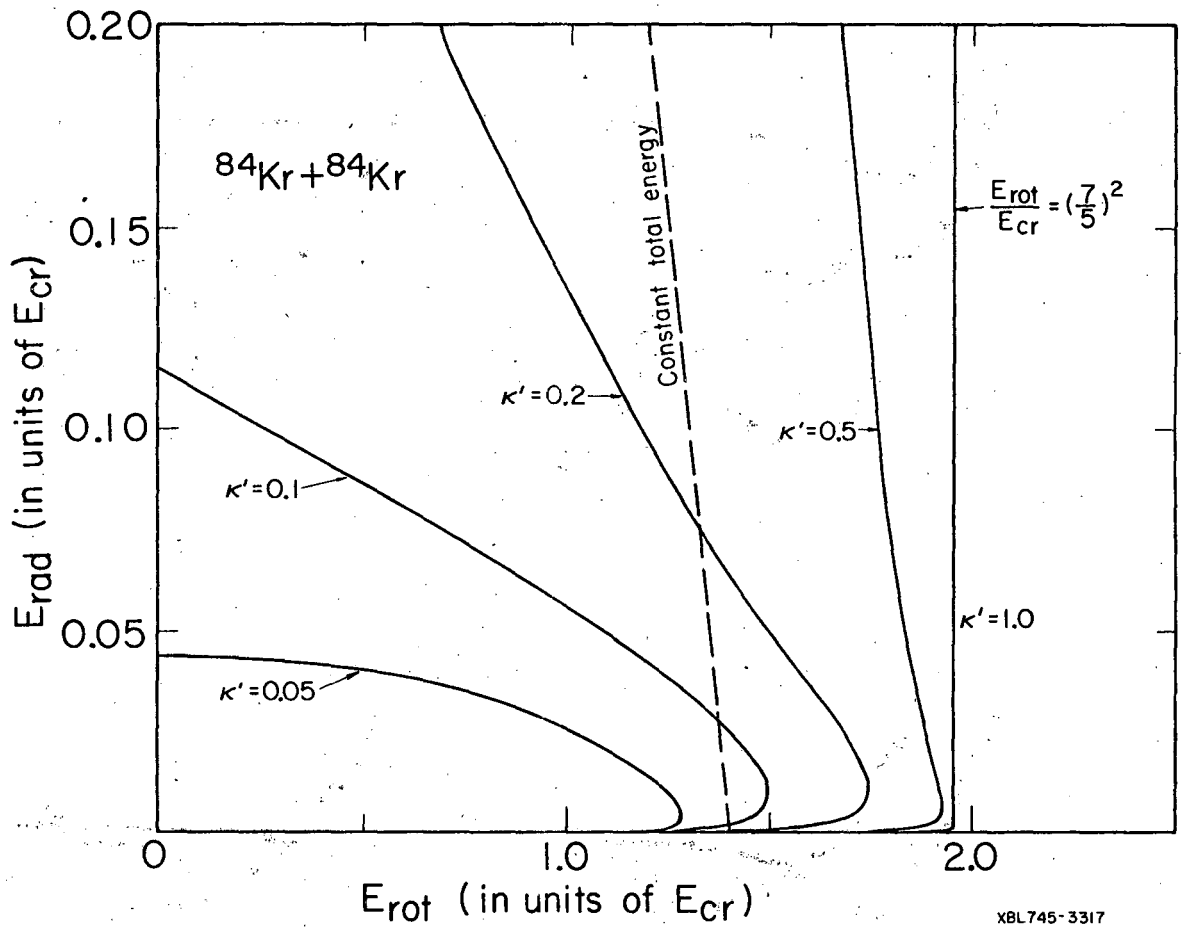
0.20
0.15
0.10
0.05
0
1.0
2.0
$^{84}Kr + ^{84}Kr$
Constant total energy
$\frac{E_{rot}}{E_{cr}} = (\frac{7}{5})^2$
$\kappa' = 0.2$
$\kappa' = 0.5$
$\kappa' = 0.1$
$\kappa' = 1.0$
$\kappa' = 0.05$
E_{rad} (in units of E_{cr})
E_{rot} (in units of E_{cr})
XBL745-3317

Fig. 3

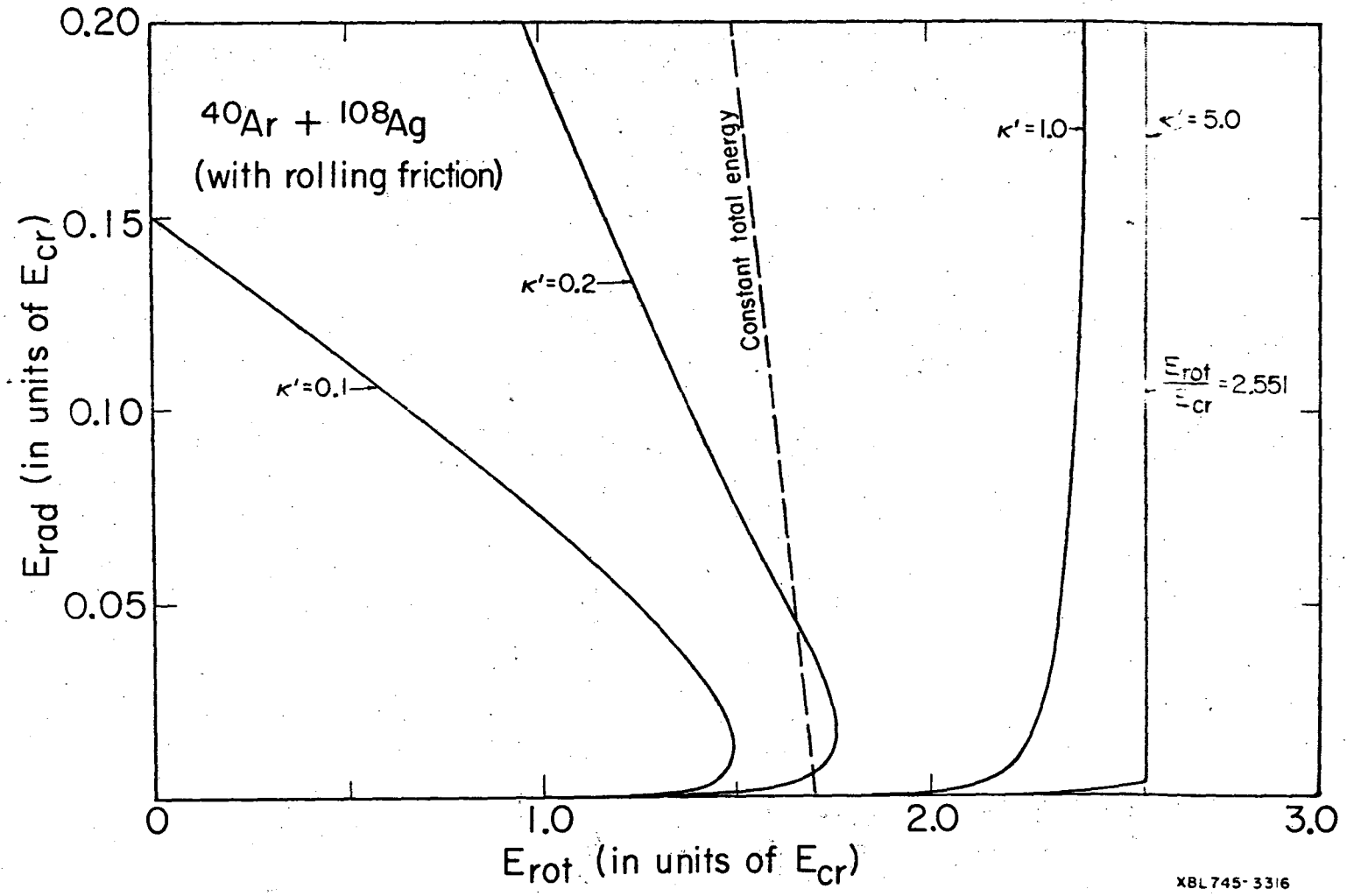
0.20
0.15
0.10
0.05
0
1.0
2.0
3.0
$^{40}Ar + {}^{108}Ag$
(with rolling friction)
$\kappa'=0.1$
$\kappa'=0.2$
Constant total energy
$\kappa'=1.0$
$\kappa'=5.0$
$\frac{E_{rot}}{E_{cr}}=2.551$
E_{rad} (in units of E_{cr})
E_{rot} (in units of E_{cr})
XBL745-3316

Fig. 4

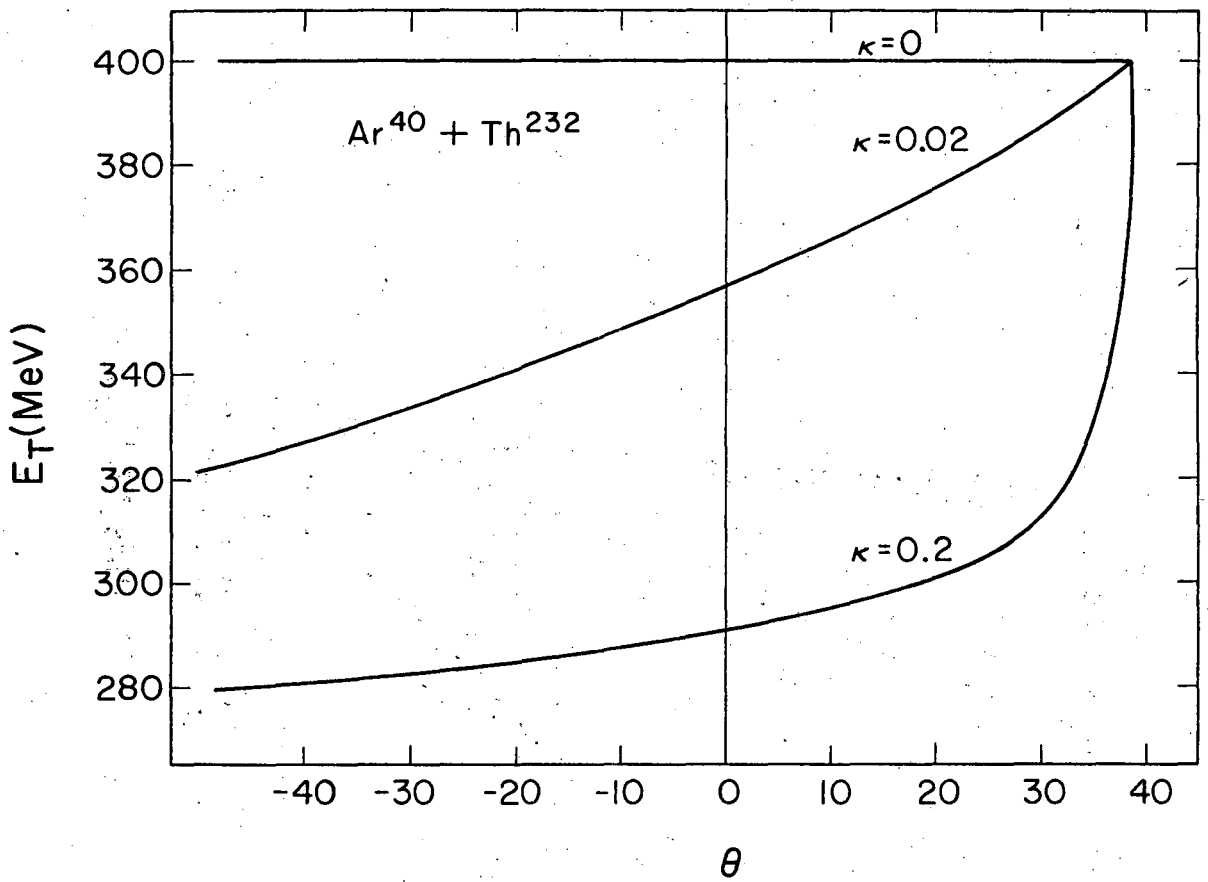

XBL 742-2425

Fig. 5

LEGAL NOTICE

This report was prepared as an account of work sponsored by the United States Government. Neither the United States nor the United States Atomic Energy Commission, nor any of their employees, nor any of their contractors, subcontractors, or their employees, makes any warranty, express or implied, or assumes any legal liability or responsibility for the accuracy, completeness or usefulness of any information, apparatus, product or process disclosed, or represents that its use would not infringe privately owned rights.

TECHNICAL INFORMATION DIVISION
LAWRENCE BERKELEY LABORATORY
UNIVERSITY OF CALIFORNIA
BERKELEY, CALIFORNIA 94720