LBL-29290

Lawrence Berkeley Laboratory
UNIVERSITY OF CALIFORNIA

Accelerator & Fusion Research Division

Presented at the ITER Neutral Beam Specialists Meeting, Garching, Germany, July 9–13, 1990, and to be published in the Proceedings

ITER Neutral Beam System U.S. Conceptual Design

P. Purgalis

September 1990

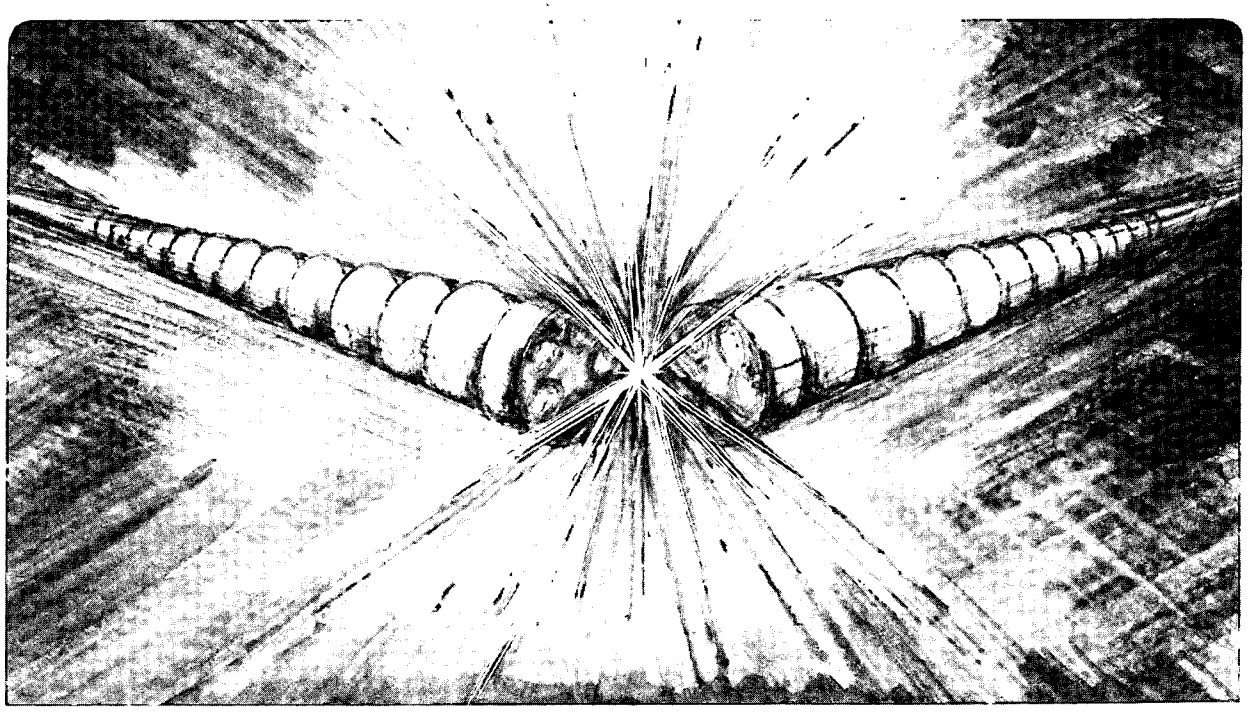

LOAN COPY
Circulates
for 4 weeks
Bldg. 50 Library.
LBL-29290
Copy 2

Prepared for the U.S. Department of Energy under Contract Number DE-AC03-76SF00098

DISCLAIMER

This document was prepared as an account of work sponsored by the United States Government. While this document is believed to contain correct information, neither the United States Government nor any agency thereof, nor the Regents of the University of California, nor any of their employees, makes any warranty, express or implied, or assumes any legal responsibility for the accuracy, completeness, or usefulness of any information, apparatus, product, or process disclosed, or represents that its use would not infringe privately owned rights. Reference herein to any specific commercial product, process, or service by its trade name, trademark, manufacturer, or otherwise, does not necessarily constitute or imply its endorsement, recommendation, or favoring by the United States Government or any agency thereof, or the Regents of the University of California. The views and opinions of authors expressed herein do not necessarily state or reflect those of the United States Government or any agency thereof or the Regents of the University of California.

LBL-29290

ITER Neutral Beam System U.S. Conceptual Design*

Peter Purgalis

Lawrence Berkeley Laboratory
University of California
Berkeley, CA 94720

For the U.S. ITER TEAM

ITER Neutral Beam Specialists Meeting
Garching, W. Germany
9-13 July, 1990

Final Version, September, 1990

*This work was supported by the Director, Office of Energy Research, Office of Fusion Energy, Development and Technology Division of the U.S. Department of Energy under Contrat No. DE-AC03-76SF00098.

US ITER NEUTRAL BEAM SYSTEM DESIGN CONTRIBUTORS

LAWRENCE BERKELEY LABORATORY
O. A. Anderson, C. F. Chan, W. S. Cooper, G. E. DeVries,
K. N. Leung, A. F. Lietzke, G. W. Koehler, W. B. Kunkel,
C. A. Matuk, T. Nakai, P. Purgalis, J. W. Stearns, T. Stevens
L. Soroka, R. P. Wells.

LAWRENCE LIVERMORE NATIONAL LABORATORY
R, S. DeVoto, W. S. Neef, L. L. Reginato

ARGONE NATIONAL LABORATORY
Y. Gohar

GRUMMAN CORPORATION - SPACE SYSTEMS DIVISION
J. W. Brook, T. E. Luzzi, J. P. Mueller, T. J. Myers, D. W. Sedgley,
P. T. Spampinato

TABLE OF CONTENTS

	Page
US ITER Neutral Beam System Design Contributors	
Abstract	1
Introduction	1
Design Approach	3
Beamline Description	3
Component Description	6
Source and Preaccelerator	6
High Voltage Accelerator	7
Insulator	8
SF_6 Insulation	8
High Voltage Power Supplies	9
Transient Spark Breakdown Protection	10
Capacitance to ground	10
Transient surge blocker	11
Crowbar	11
Cooling Water Supply	11
Beam Steering Magnets	12
Neutralizer	12
Residual Ion Deflector / Dump	12
Ion dump sputtering erosion	14
Vacuum System	15
Vacuum Vessel	17
Magnetic Shielding	18
Neutron Shielding	19
Interfaces	19
Weight	20
Power Requirements	20
Cooling Water Requirements	21
Gas Flow In/Out of Torus	21
Cryo Usage	21
SF_6 Handling	21
WBS	22
References	23
Tables 2, 3, and 6	25
Figures 1 to 30	28

ABSTRACT

In this document we present the US conceptual design of a neutral beam system for International Thermonuclear Experimental Reactor (ITER). The design incorporates a barium surface conversion D^- source feeding a linear array of accelerator channels. The system uses a dc accelerator with electrostatic quadrupoles for strong focusing. A high voltage power supply that is integrated with the accelerator is presented as an attractive option. A gas neutralizer is used and residual ions exiting the neutralizer are deflected to water-cooled dumps. Cryopanels are located at the accelerator exit to pump excess gas from the source and the neutralizer, and in the ion dump cavity to pump re-neutralized ions and neutralizer gas. All the above components are packaged in compact identical, independent modules which can be removed for remote maintenance

The neutral beam system delivers 75 MW of D^o at 1.3 MeV, into three ports with a total of 9 modules arranged in stacks of three modules per port . To increase reliability each module is designed to deliver up to 10 MW; this allows eight modules operating at partial capacity to deliver the required power in the event one module is out of service, and provides 20% excess capacity to improve availability. Radiation protection is provided by shielding and by locating critical components in the source and accelerator 46.5 m from the torus centerline. Neutron shielding in the drift duct and neutralizer provides the added feature of limiting conductance and thus reducing gas flow to and from the torus.

INTRODUCTION

The conceptual design presented has evolved as a result of four workshop sessions that were held with the purpose of arriving at a common design for the neutral beam system. The participants in the design effort were EC, Japan, US, and USSR. The "Neutral Beam System Interim Report" [1] summarizes the effort of the four parties and

describes the design parameters. The requirements as listed in [1] are shown in Table 1.

Table 1

Injected Power (hydrogen or deuterium)	75 MW
Aiming tangency radius	6.2 m
Power profile shapes at plasma	hollow, flat, peaked
Power steps	10%
Rate of change of power	10MW/s
Overall system efficiency	>0.4
Energy (max)	1.3 MeV
Energy steps	50%, 75%, 100%
Time to change energy	10s
Pulse length (maximum)	350 hours
Tritium accumulation (total)	< 10 grams
Impurity flux into torus	$< 3.5 \times 10^6$ atoms/s
Power density at far wall, steady state	< 50 W/cm2

The required delivered power to the plasma is 75 MW (D^o), with the constraint that unanticipated reductions in power are limited to 10 percent . Nine modules capable of delivering a maximum power of 10 MW each, ensure that the requirements are met for the 350 hour pulse length. Normally the modules operate at reduced power but in the event of a component failure the power can be increased. Since each module is comprised of four separate sources, the power requirements can be met even after the failure of 6 sources, this corresponds to a failure of one complete module and two sources in other modules

In addition, during the design process, the following design features were listed as highly desirable:

Beamline modularity
Minimum number of components needing in situ remote maintenance
Easily removable beamlines and components
High availability
Minimum adverse impact on ITER design and operation
Adjustable beam footprint on plasma

The US conceptual design that incorporates the above requirements and features is presented. Alternates are discussed as backups for the baseline case in some areas, such as for the source and power supplies.

DESIGN APPROACH

The US beamline concept follows a conservative design approach that results in a system requiring only a modest extrapolation from existing technology. The modular approach is flexible in that it allows for upgrades as areas of technology progress. The accelerator for example is designed in modules of 250 keV, so that more modules can be added if the required beam energy increases. The gas cell neutralizer currently baselined can be replaced by a plasma cell or laser neutralizer to improve efficiency. The system, as shown in Fig.1 and 2, consists of nine modules occupying three ports, with a vertical stack of three modules sharing a common drift duct for each port. Each module is of modest size (21 MW power supply), so that it is feasible to build and test a prototype and provide an operational spare.

Radiation protection is provided by shielding in and around the drift duct, in the neutralizer, and by positioning the source and accelerator as far as practical from the radiation source. A distance from accelerator exit to the torus centerline of 46.5 m is feasible without losing the capability to pass the combined, diverging beams through the port aperture.

BEAMLINE DESCRIPTION

A module is a self contained unit capable of delivering 10 MW of D^o. It consists of the vacuum vessel, the high voltage transformer/rectifiers, sources, accelerator, neutralizer, ion deflector/dump, cryopumps and local cryogen storage system. A module and its components are shown in Fig. 3 and 4 and the beamline parameters are shown in Table 2.

Three modules stacked vertically are aimed at each of the three ports through a common drift duct. The accelerator in each module is arranged in two, side by side, vertical arrays of beams; each array consists of two segments, each of which accelerates 4 beams.

Each segment is supplied by a single source; thus there are four sources per module or a total of 36 sources in the system. The accelerator array arrangement is shown in Fig 5.

The segments can be separately aimed in units of four beams. The segments are aimed in the horizontal plane, so that they cross in the 8.9 meter long port duct. The port size is determined by the location of the magnet coils and is 0.8 m wide and a 3.4 m high.

In the vertical plane the segments are aimed to intersect the plasma target at equally spaced increments thus resulting in a uniform vertical power density profile. The aiming of the segments will be fixed once the modules are installed. For profile control electromagnets at the entrance of the neutralizer can steer the beamlets of each segment. There is one magnet for each four channel accelerator segment. A deflection of 15 mradians is required in the vertical direction, from the base position, to obtain the hollow or peaked beam power density profiles shown in Fig 6. The aiming parameters are shown graphically in Fig 7 and listed in Table 3 for the uniform power density profile.

There is a separate gas neutralizer channel for each accelerator channel for the first 300 cm of the 500 cm neutralizer. For all three power density cases the beams enter the neutralizer at the same location. To accomodate the vertical deflection of the beams the neutralizer passages flare out and merge at a distance 300 cm from the entrance as shown in Fig 8 and 9.

The calculated beam size and divergence (1/e half angle) at the accelerator exit is 6.0 cm with 4.6 mradian divergence in the horizontal direction and 4.0 cm with 6.9 mradians in the vertical direction.
For design purposes we have assumed a Gaussian angular distribution

and have sized the openings through the neutralizer, dumps and drift duct to transmit 98% of the beam; for this calculation a skim half angle of 7.9 mradians is used in the horizontal and 11.4 mradians in the vertical direction. The skim angle includes 1 mradian for missalignment. The calculated aperature dimensions are shown in Fig 10.

An electromagnetic deflector (EMD), where the deflector and dumps are combined in one unit, was choosen for the baseline design, resulting in a compact assembly.

Since it is impossible to avoid line-of-sight to the ITER plasma, radiation shielding is provided in and around the neutralizer. The neutralizer passages are made as small as possible consistent with the area required for beam transmission; the remaining neutralizer volume is filled with neutron shielding. Calculations are in progress to determine the neutron flux at the location of the accelerator.

The design allows a complete module to be removed for maintenance and repair. It can be translated sideways, then lifted vertically and transported to a hot cell for service.

The drift duct is isolated from each module by a valve located close to the the exit of the ion dumps. The valve has two rectangular openings 26.5 cm X 190 cm spaced 42 cm apart. The modules are designed so that some components can be serviced without removing the module; for example the end cap can be removed for high voltage power supply access and replacement without removing the module.

The vacuum vessel wall also provides significant magnetic shielding as discussed on page 17 and 18. The magnetic field from the tokamak is 100 gauss at the neutralizer exit, and decreases to 55 gauss at the source.

COMPONENT DESCRIPTION

Source and Preaccelerator.

The US concept features modular barium surface conversion sources (SCS) producing D^- [2]. The sources are rectangular magnetic buckets using RF to generate the plasma. The results of the magnetic calculations are shown in Fig 11.

Each source has four 20 cm diameter converters with each converter supplying the current to a single channel preaccelerator followed by a high voltage ESQ accelerator. The four converter source is shown in Fig. 12 and the design parameters are listed in Table 4.

At present a current of 0.125 amps D^- has been obtained from a 6 cm diameter converter at a source pressure of 1.3 mT [3]. If the output scales simply as the area of the converter; this would correspond to a current output of 1.4 amps for a 20 cm diameter converter, which easily meets the design requirements.

The beam is accelerated by a standard four grid electrostatic preaccelerator to 300 keV and then further accelerated by a ESQ high voltage accelerator. A crosssection of the preaccelerator module and the BSC source are shown in Fig. 13. Shown in the upper half of the same figure is a volume production source, which is used as the back up design option.

Table 4 BSC source design parameters

Plasma generation	-	RF 200kW at 1-2 MHz
Pressure	-	1.5 m T
Accelerator entrance aperture	-	8.0 cm dia
Converters	-	four per source
Converter diameter	-	20 cm
Converter current and voltage (ea)	-	30 A at 300 V
D^- current per converter	-	1 A at ESQ entrance
Chamber dimensions	-	40 X 106 X 18 cm

High Voltage Accelerator

The accelerator is an electrostatic design that uses strong focusing electrostatic quadrupoles (ESQ) for beam space charge control [4]. This concept permits constant current with varying voltage (CCVV) so that current drive can be maintained without excessive "shine-through" for different plasma densities.

The accelerator is a scaled up version of the ESQ accelerator that has been built and tested at LBL [5]. A scaling factor K = 2.5 was used thus increasing all dimensions by K and the current by K^2 .

The 1.3 MeV unit has a 300 kV preaccelerator and four 250 kV modules. Each module is 50 cm long and contains two sets of quadrupoles. The total accelerator is 250 cm long. A single channel of the accelerator is shown in Fig 14.

Electrical breakdown is the major problem with high voltage dc acceleration; the ESQ design offers many advantages in this area. For this accelerator, by increasing its length, the average accelerating electric field can be reduced as much as is necessary to prevent electrical breakdown. In this design the highest electric field anywhere in the accelerator is 40 kV/cm, at least a factor of 2 smaller than has been used in positive ion accelerators now operating on TFTR and DIII-D. The average electric field along the column is only 5 kV/cm, again a factor of two smaller than exists in a typical 2 MeV electrostatic accelerator operating today.

In addition the electric fields seen by a newly born particle in a channel are predominantly transverse (the ESQ focusing fields), which would rapidly sweep stray particles out of the channel. Because the average electric field is small the electrostatic energy storage in a single module is also small (less than 1 joule).

The concept of an electrostatic accelerator with ESQ focusing has been used in the USSR to accelerate 0.08 A of H^+ to 1.2 MeV [6].

Insulator

The insulator is fabricated from epoxy and is structurally supported by embedded stainless steel gradient rings. The snubber cores used to protect the accelerator against spark breakdown are distributed along the insulator, resulting in a total thickness of 25 cm. The insulator assembly is supported by direct attachment to the vacuum vessel on the ground end and by radial epoxy supports at the high voltage end.

For electrical insulation low pressure sulfur hexaflouride (SF_6) gas is used; it is desirable to keep the gas pressure as low as possible to to keep the load on the insulator structure low.

SF_6 Insulation

SF_6 is used as the insulating gas to isolate the high voltage components from the vacuum vessel wall which is at ground. A spacing of 75 cm is allowed between the 1300 kV terminal and ground with proportionally smaller gaps in the lower voltage area. At this spacing SF_6 at one atmosphere (abs) can provide the necessary insulation. For low pressure SF_6 the experimentally determined break down voltage V_{br} (kV) is related to the gas pressure p (atm abs), the gap distance d (cm) and the enhancement factor f by [7]

$$V_{br} = 89\ p\ d\ /\ f.$$

The geometry of the high voltage components as well as the calculated breakdown voltage is shown in Fig 15.

The high voltage structure is supported by radial epoxy posts which have an average gradient of 17.5 kv/cm. In [7] epoxy post insulators were used successfully in large size coaxial electrode voltage holding tests, were the SF_6 gas pressure ranged from 1 to 7.8 atm and the

voltage from 500 to 4300 kV. The tests were designed for electrode voltage holding and not to test the epoxy post insulators. At low pressure there was no breakdown over the 30 cm long insulators at an average gradient of 30 kV/cm; it was not possible to determine the flashover voltage of the insulators since breakdown occurred elsewhere. This supporting insulator design therefore appears to be conservative.

High Voltage Power Supplies

A very attractive design option is to integrate the high voltage transformer/rectifier stacks with the 1.3 MeV dc accelerator to eliminate the need for a high voltage transmission line and feedthrough and to reduce the required floor space. Operating the power supply at high frequency (100kHz) permits a very substantial reduction in size of the power supply components and permits stacking the power supply modules around the accelerator high voltage insulator, see Fig 3 and 16. This design concept minimizes the stored energy and naturally provides voltages to the electrodes of the ESQ accelerator where they are required.

The power supply assembly is highly modular for ease of maintenance. Individual plug-in 125 kV modules can be replaced by remote maintenance gear by sliding the modules out through the back end of the vacuum vessel after the end cap has been removed. An o-ring seal at this joint is acceptable since the enclosed volume contains SF_6 and is isolated from the tritium contaminated drift duct.

A similar concept using linked insulated transformers supply rf power to the plasma sources through rf matching network located at high voltage. All supplies are fed by remotely located oscillators and the output is varied by pulse modulation. The high frequency oscillators required for each module have approximately a 20 m^2 footprint and are located outside the neutron shielding. A block diagram of the electrical system is shown in Fig. 17.

A 100kV, nine stage 40 kHz prototype has been built at LBL. The model nine stage cascaded resonant transformer rectifier has been operated to 75 kV with a 500 k ohm load, and to 45 kV with a 100 k ohm load. The efficiency with the 100 k ohm load was 95%. Computer modeling accurately predicted the performance of the model rectifier.

Further work is in progress on the neutron shielding calculation for the total radiation dose at the location of the high voltage insulator where the power supplies are located. The current dose estimate, for the shielding shown, is 5×10^5 rads for gammas and neutrons of all energies.

The backup high voltage power supply design is to locate the power supplies, as is done in conventional designs, at some distance from the beamline module and transfer the power through a high voltage transfer line and bushing. Such transfer line, although bulky, is feasible as shown in [8], where the design and testing of a 75 cm diameter, SF_6 insulated semi-flexible 1200 kV transmission line operating at 4.4 atm, is described.

Transient Spark Breakdown Protection.

Capacitance to ground

The equipment used to operate the source is located on an platform that is at beam accelerator potential, as shown schematically in Fig. 18. The capacitance of this equipment and its platform measured to ground is calculated to be about 400 pF. When a spark down occurs inside the accelerator, the stored energy of this capacitance can damage the accelerator. A transient surge blocker is distributed around the accelerator, as shown in Fig. 3, using a core stack of high frequency, high μ material.

Transient surge blocker

The core stack will be of the material "metglass 2605CO" which has good high frequency response characteristics. Its μ=1000 for sub-microsecond times. The core stack is incorporated in the accelerator insulator structure and it provides a sufficiently high impedance to prevent the current from increasing rapidly if a spark down occurs. The core stack saturates in about 300 ns, which is sufficient time for spark detecting electronics to fire a crowbar. The crowbar diverts the power supply current from the accelerator.

The core stack equivalent circuit, as shown in Fig. 19, is represented as an inductor parallel to a resistor, their values are L=25 μH , R=938 ohms and are calculated as shown in Fig. 20. The details of one core stack are shown in Fig. 21. The transient response of the current and voltage is calculated and shown in Fig. 22. The total energy dissipated in the spark, during the time interval when the spark is initiated and the the time that the crowbar is fired, is estimated as 250 X 10^{-9} s X 100 V X 5200 A = 0.13 J. This is below the presently used criteria for energy in a sparkdown that will cause damage.

Crowbar

The crowbar is constructed from a number of spark gaps connected in series to acquire high voltage switching capabilities. The electronics that fires the crowbar senses accelerator over current. The total response time of the crowbar is therefore in the order of 250 ns. This type of crow bar is commercially available with working voltages up to a few million volt and of current ratings in to the kilo amperes.

Cooling water supply

Cooling water supply and return lines form the final layer of the insulator/power supply package the 15 cm diameter nonconducting lines make five turns around the power supply. Each loop has a mean diameter of 440 cm resulting in a total length of 6.90 m. Using low conductivity

water with a resistivity of 1.5 $X10^6$ ohm-cm the drain current for each line is 0.022 A or a total of 0.044 A for both the lines. The lines are supported from the insulator structure and are not attached to the power supplies thus making it possible to pull out the power supply modules from the back end of the beamline module.

Beam Steering magnets

The steering magnets used for profile control are located at the neutralizer entrance. For a beam deflection of 15 mradians 3500 Gauss-cm is required. Fig 3 shows the location of the magnets. There is one magnet for each accelerator segment of four channels.

Neutralizer

A gas cell neutralizer was chosen because of its simple and proven technology. The neutralizer was analyzed using a 3-D Monte Carlo code to determine how the required gas flow and therefore the size of the vacuum pumping system is affected by the following: the neutralizer box shape, entry configuration, gas injection location, injection angle, and placement of baffles. Fig 8 and 9 show the neutralizer passages which are kept as small as possible to minimize the neutron flux to the accelerator. The analysis showed [9] that to obtain the highest line density integral, for an acceptable gas load to the cryopumps, the neutralizer should include: minimum exit areas, maximum possible neutralizer compartment width, 15 barriers or baffles, and gas injection located at 25 to 37.5% of the neutralizer length from the entrance. Because of the requirement of providing the maximum possible amount of neutron shielding, the optimum amount of baffles and the optimum neutralizer width can not be achieved.

Residual Ion Deflector/dump

The assembly combines the deflecting magnet and the ion dumps in one unit and consists of two arrays of horizontal louvers, made of copper

plate, placed on either side of the beam. A current of 8 kA per meter of height or a total current of 20 kA flowing in the copper plates, parallel to the beam produces a 100 Gauss flux density in the 0.2 m gap. The results of the magnetic calculations are shown in Fig. 23. To intercept the deflected ions the total length of the assembly is 3.1 m. The dumps for one accelerator array are shown in Fig. 24 and 25. There are two sets of such dumps per module as shown in Fig 3. Table 5 shows the dump dimensions [9] where the letters refer to dimensions shown in Fig. 24 and 25.

TABLE 5

Number of plates per side	41
Plate inclination angle	13.0 degrees
Assembly width (b)	21.5 cm
Assembly height	200.0 cm
Vertical spacing (a)	5.0 cm
Channel width (D)	20.0 cm
Assembly length (L)	310.0 cm

The dumps have to be designed for the commissioning of the module, when the neutralizer is operated without gas and the entire negative ion beam is deflected into one side of the dump assembly. This mode of operation occurs infrequently and for short durations of time, but in this mode the maximum heat flux on the leading edge is 1.94 kW/cm^2 and 0.43 kW/cm^2 on the top surface of the inclined plate. Table 6 shows the power loading on the ion dumps, where theta is the angle in the horizontal plane, between the ion dump leading edge and the impinging beam. In the table q is the heat flux at the leading edge of the dumps for the y and z coordinates shown and q_0 is the heat flux normal to the beam at the dump entrance (z=0.0) for the y and x coordinates shown.

A swirl tube will be used along the leading edge of the dump to absorb the high heat flux. A swirl tube has the capability of operating at $2 kw/cm^2$ with adequate safety margin; the experimentally determined burnout heat flux is more than twice this value. Also since the high heat flux area occurs only along a short section of the leading edge as shown in Fig. 24, the operating conditions for the swirl tube are not that demanding.

During normal operation when the positive ions are dumped on one side and the negative ions on the other, the heat flux on the leading edge of the dumps is 380 w/cm^2 and only 85 w/cm^2 on the surface of the inclined plates.

Ion dump sputtering erosion

In the area of the peak heat flux the incident angle is 5.3 degrees or 84.7 degrees from normal. Experimental data at high energies and at low incident angles is not available. For normal incidence of D^+ on copper at 1.2 MeV, the sputtering coefficient S =0.00035 atoms/ion [10]. Extrapolating to 1.3 MeV S = 0.00029. Recent unpublished calculations at LBL, using the TRIM code found the sputter coefficient S = 0.013 atoms/ion at 1.3 MeV and a incident angle of 5.3 degrees. The calculated sputter yield curve is shown in Fig. 26.

The erosion of copper for 2 kW/cm^2 and S = 0.013 atoms / ion is:

$2 kw/cm^2$ @ 1.3 MeV = 1.53×10^{-3} $Amps/cm^2$

$1.53 \times 10^{-3} Amps/cm^2 \times 6.24 \times 10^{18}$ ions/s Amp = 9.6×10^{15} ions/sec cm^2

$$\frac{0.013 \text{ atoms/ion} \times 9.6 \times 10^{15} \text{ ions/s cm}^2}{8 \times 10^{22} \text{ atoms/cm}^3} = 1.6 \times 10^{-9} \text{cm/sec}$$

Assuming 15 minutes commissioning every week, the copper tube wall erosion during a year is less than 0.001 mm, this is 0.1% for a standard small tube which has a wall thickness of 1 mm. Under the above

assumptions the calculated erosion rate is acceptable even at the highest heat flux.

For normal operation, when the maximum heat flux is 380 w/cm^2, the yearly erosion is 0.002 mm or 0.2% for a 1 mm tube wall thickness. This is based on 13 weeks (0.25 availability) of 24 hr per day operation. For long term operation a possible solution is to design the dumps so that the swirl tubes at the leading edge of the dumps can be periodically replaced.

Vacuum System

A 2-D and 3-D Monte Carlo code [9] was used to determine the gas flow and pressure in the beamline system. Cryopumps at the accelerator exit and in the ion dump compartment maintain an acceptably low line density from the neutralizer exit to the plasma. The large diameter high voltage insulator allows adequate conductance from the source to the pumps, which are sized to handle also the neutralizer back-flow. The restriction provided by the neutralizer passages divides the two regions and allows differential pumping. The arrangement at the accelerator exit comprises six 3.13 m^2 cryopumps per module. Of the three pumps on either side two are operating while the third is being regenerated during continuous operation.

Fig. 27 shows the model used at LBL in the 2-D Monte Carlo analysis of the accelerator area. Fig. 28 and 29 show the calculated pressure distribution and beamloss.

In the ion dump area there are four 3.75 m^2 pumps; one per side operating and one in the regeneration mode, these pumps handle the neutralizer gas flow and minimize flow to the plasma through the drift duct. Table 7 summarizes the preliminary results for the vacuum system for one module.

TABLE 7

Accelerator exit:

Pressure	9.8×10^{-5}	Torr
Gas flow from source	25.6	Torr.l/s
Gas flow from neutralizer	4.3	Torr.l/s

4 cryopanels pumping	4 X 1.25 m X 2.5 m =	12.50 m^2
2 regenerating	2 X 1.25 X 2.5 =	6.25
	total =	18.75 m^2

Neutralizer exit:

Pressure	3.5×10^{-5}	Torr
Gas flow from neutralizer	10.3	Torr.l/s

2 panels pumping	2 X 1.25 m X 3.0 m =	7.5 m^2
2 regenerating	2 X 1.25 m X 3.0 =	7.5
	total =	15.0 m^2

There is a total of 20 m^2 of active pumping area per module which corresponds to a pumping speed of 1.58×10^6 l/s at a specific pumping speed of 79000 l/s per m^2 for D_2. The placement and the size of the cryopumps has not been optimized and the areas shown include some excess. The option has been discussed, in the design workshop, of using inert gas in the hall which contains the beamline system. With inert gas there would be no danger of a deuterium-oxygen explosive mixture and it appears that the cryopumps would need to be regenerated only at the end of a two week run. For this option the cryopump area shown could be reduced.

A prototype continuous operation cryopump, as would be required if the inert gas option is not choosen , has been demonstrated [11].

The liquid helium distribution system for each of the nine modules, has individual 500 l dewars which serve the pumps and accept the coolant during regeneration. Liquid helium demand including lines, bayonets, valves, cryopumps, and the local dewar is 47 W (65 l/hr) per module. The comparable liquid nitrogen demand is approximately 9.1 kW (210 l/hr). [9]

Vacuum vessel

The minimum wall thickness of the vacuum vessel is determined by the buckling load due to external pressure. The critical pressure Pc is related to the cylinder outside diameter D and the wall thickness t by [12]:

$$P_c = 2.2\ E\ (\ t/D\ )^3 \qquad \text{for} \qquad L > L_c$$

and

$$P_c = 2.8\ E\ (\ t/D\ )^{2.5} \qquad \text{for} \qquad L < L_c$$

where $L_c = 1.11\ D\ (\ D/t\ )^{0.5}$

is the length beyond which P_c is independent of L.

The required thickness to prevent collapse at atmospheric pressure , using a safety factor of 3, for the two different diameters shown in Fig. 3 is:

P_c - atm	D - cm	L -cm	t - cm
1.0	400	900	1.75
1.0	625	150	1.25

The actual wall thickness used will be greater than required for structural strength and will be determined by the magnetic shielding requirements.

Magnetic shielding

The magnetic field at the module location is shown in Fig. 29. For a cylinder the attenuation can be estimated from:

$$g = (\mu X t)/D$$

g = attenuation = H_o/H_{in}

μ = permeability

t = wall thickness

D = outside diameter

For nested cylinders the total attenuation is the product of the individual values. Using one layer of carbon steel (the vacuum vessel) plus two layers of silicon steel the total attenuation is:

$$g = g_1 X g_2 X g_3.$$

The following properties are used:

	μ - max @ Gauss
1010 carbon steel	3000 @ 10000
silicon steel	5000 @ 8000

Calculations show that it can be assumed that a hollow cylinder in a uniform magnetic field will concentrate the flux from the surroundings that extend for a distance of up to two diameters. Using this assumption, the cylinder thickness is calculated that will result in a flux of 10000 gauss in the steel. For the 625 cm diameter cylinder the required thickness, with a safety margin of 10% is:

$$t = 1.1 X (60 \text{ gauss } X 625 \text{ cm})/(10000 \text{ gauss}) = 4.1 \text{ cm}.$$

For the 400 cm diameter section:

$$t = 1.1 \times (100 \text{ gauss} \times 400 \text{ cm})/(10000 \text{ gauss}) = 4.4 \text{ cm.}$$

The total attenuation is summarized below for the two cylindrical sections.

Diameter D_o - cm	Attenuation $g_1 \times g_2 \times g_3$	B_o Gauss	B_{in} Gauss
625.0	19.7 X 4.0 X 4.0 = 315	60.0	0.19 @ source
400.0	33.0 X 6.2 X 6.2 = 1270	100.0	0.08 @ neutralizer exit

Values for B_o are from Fig. 29 and B_{in} is the flux inside the cylinder.

Checking the flux density in the silicon steel cylinder , assuming that the flux inside the vacuum vessel is concentrated in the 0.5 cm thick shield:

B_{sil} = (60 gauss/19.7) X 625 cm/(2 X 0.5 cm) = 1900 gauss
a value well below the 8000 gauss at which μ = 5000.

No attempt has been made to optimize the shield thickness or to account for the changing crossection of the vacuum vessel.

Neutron Shielding

Neutron shielding around the drift duct is shown in Fig. 1; the shielding at the neutralizer and the power supplies is shown in Fig. 3 and 4. Details of the shielding at the neutralizer are shown in Fig. 8 and 9. Neutron flux calculations are in progress.

INTERFACES

Weight (metric tons)

Vacuum vessel		88.0
Additional magnetic shielding		1.6
Epoxy insulator		11.1
Sparkdown protection cores		9.6
ESQ accelarator	2 X 3.75 =	7.5
Sources	4 X 0.5 =	2.0
Power Supply components		21.0
Ion deflector / dumps		11.0
Neutron shielding and neutralizer (80% steel, 20% water)		110.0
	Total	251.8

Power Requirements

One module (16 channels)

Source -	RF	50 kW X 16	800.	kW
	Converter	30 A X 300 V X 16	144.	kW
ESQ			650.	kW
Accelerated current				
0.88 A X16 = 14 A		14 A X 1300 kV	18200.	kW
		Total input	19800.	kW
Loss in transformer rectifier stacks @ 95% eff.			990.	kW

Cooling Water Required

Cooling water at high voltage. (20 C temperature rise)

Transformer rectifier stacks	1.20×10^{-2} m^3/s	(190 gpm)
ESQ accelerator	7.90×10^{-3} m^3/s	(125 gpm)
Source	1.14×10^{-2} m^3/s	(180 gpm)
Total at high voltage	3.13×10^{-2} m^3/s	(495 gpm)

Line size required - 15 cm Dia (v = 1.66 m/s)
One supply and one return

Cooling water at ground [9]

Beam dumps - normal operation	1.13×10^{-1} m^3/s	(1800 gpm)
Beam dumps - commissioning	2.83×10^{-1} m^3/s	(4500 gpm)

Line size required - 25 cm dia (v = 2.75 m/s for commissioning)
Two supply and two return

Gas Flow In/Out of Torus (entire neutral beam system)
Out of beamlines - deuterium - 4.11 Torr.l/s [13]
Into beamlines - tritium - 0.09 gm/hr

Cryo Usage (nine modules) [9]

He	427 W (580 l/hr)
LN	82 kW (1890 l/hr)

SF_6 Handling

Each module contains 73.5 m^3 (2600 ft^3) of SF_6 at STP (w = 6.2 kg/m^3 at STP). A commercial unit can be used for SF_6 handling. Commercial units are available for reclaiming SF_6 for purification and storage. The unit is self contained and includes a vacuum pump, refrigerator, purifier, gas drier, storage tank and the required controls.

WBS

1.0 SD&I (System Design and Integration)
2.0 Neutral beam module
- 2.1 Source
- 2.2 Pre-accelerator
- 2.3 Accelerator
- 2.4 High voltage insulator
- 2.5 Profile controller
- 2.6 Neutralizer
- 2.7 Ion deflector an ion dumps
- 2.8 Cryopumps
- 2.9 Vacuum vessel

3.0 Electrical Systems
- 3.1 AC equipment
- 3.2 High voltage power supply system
- 3.3 High voltage transmission system
- 3.4 Ion source power supply system
- 3.5 Spark down protection system
- 3.6 Profile controller power supply system
- 3.7 Ion dump power supply system
- 3.8 Local control and instrumentation system
- 3.9 Supervisory control and instrumentalion system

4.0 Mechanical System
- 4.1 Large Vacuum valves, drift duct and torus interface
- 4.2 vacuum system
- 4.3 Cryo system
- 4.4 cooling system
- 4.5 Gas handling system; Hydrogen deuterium, SF6

5.0 Civil Systems
- 5.1 Electrical services
- 5.2 Cryo services
- 5.3 Vacuum services and exhaust to tritium system
- 5.4 Cooling water services
- 5.5 Gas services; hydrogen/deuterium, SF6
- 5.6 Space frame for modules
- 5.7 Radiation shielding

6.0 Installation and commissioning

REFERENCES

1. ITER Neutral Beam System, Interim Report, ITER-IL-4-9-9, Rev 3, Oct 2,1989.

2. A. F. Lietzke, O. A. Anderson, W. S. Cooper, W. B. Kunkle, J. W. Kwan, K. N. Leung, and M. D. Williams, " Surface-production D^- Ion Source Development at LBL", 31th APS Meeting ,Anahiem, Ca. Nov.13,1989

3. W. S. Cooper, "U. S. Neutral Beam R&D Update", ITER Neutral Beam Speciatists Meeting, Garching, W. Germany, July 9-13, 1990.

4. O. A. Anderson, L. Soroka, C. H. Kim, R. P. Wells, C. A. Matuk, P. Purgalis, W. S. Cooper, and W. B. Kunkel, "Constant-current variable-voltage (CCVV) accelerators," submitted to the First European Particle Accelerator Conference, Rome, June 7-11, 1988; also available as Lawrence Berkeley Laboratory Report LBL-25339.

5. J. W. Kwan, G. D. Ackerman, O. A. Anderson, W. S. Cooper, G. J. DeVries, R. P. Wells, L.Soroka, and W. F. Steel, " Testing of an ESQ Accelerator for Neutral Beam Injection", 31th APS Meeting Anaheim,Ca Nov. 13, 1989.

6. E. A. Abramyan, M. M. Brovin, V. V. Vecheslavov, V. A. Gorbunov, V. I. Kononov, and I. L. Chertok, "A high-current accelerator that produces 1.2 MeV protons," translated from Atomnaya Energiya 29,346 (1970).

7. C. M. Cooke, and R. Velazquez, "The Insulation of Ultra-High-Voltage in Coaxial Systems using compressed SF6 Gas", IEEE Trans, Vol. PAS-96, no. 5 Sept/Oct 1977.

8. S. J. Dale, P. C. Bolin, A. H. Cookson, and R. Eaton, "Dielectric Design and Test of 1200 kV Semi-Flexible SF6 Insulated Transmission Line", IEEE Trans. Vol. PAS-102, No. 2 Feb. 1983.

9. T. J. Myers et al. "International Thermonuclear Experimental Reactor (ITER) Neutral Beamline Design - Summary Report for FY 1990", No. ES90-135, Grumman Space Systems, Sept. 1990.

10. C. F. Barnett et al. "Atomic Data For Controlled Fusion Reseasrch" ORNL- 5207.

11. D. W. Sedgley, B. D. Abel, and W. J. Starling, "Conceptual design of a large regenerable cryopump," Proceedings of the 12th Symposium on Fusion Engineering, Monterey, CA (October 12-16, I987), page 141; IEEE Catalog No. 87CH2507-2. This article also contains references to earlier work.

12. H. H. Bendar, Presure Vessel Design Handbook, Van Nostrand Reinhold Co., 1981.

13. D. W. Sedgley et al. "International Thermonuclear Experimental Reactor (ITER) Neutral Beamline Design - Summary Report for FY 1989", No. ES89-130, Grumman Space Systems, Sept. 1989.

TABLE 2

US ITER BEAMLINE PARAMETERS

Total no of modules	(nbline)	=	9
Total delivered power	(topwr)	=	90.00 Mw
Energy	(energy)	=	1.30 MV
Accelerator output/channel	(bamps)	=	0.88 Amps
Neutralizer efficiency	(efneut)	=	0.61
Transmission efficiency	(eftrans)	=	0.97
Reionization loss	(rilos)	=	0.05
Module diameter	(bmld)	=	400.00 cm
			625.00 cm
Module spacing cntr-cntr	(dctr)	=	650.00 cm
No of arrays per module	(naray)	=	2
Array spacing horizontal	(araysh)	=	47.50 cm [c7]
Array width	(arayw)	=	50.00 cm [c8]
Beam diameter at accel exit	(dbmlt)	=	6.00 cm
Channel spacing	(sbmlt)	=	22.00 cm
No of sources/array	(nseg)	=	2
Spacing betwn seg hole-hole	(sseg)	=	58.00 cm [c1]
Dist last hole to segmnt end	(dseg)	=	25.00 cm [c4]
Dist segment to insulator	(siseg)	=	34.00 cm [c6]

CALCULATED DATA

Delivered power/module req	(topwrb)	=	10.00 Mw
Channels/module-as calculated	(bmltn)	=	15.50
Channels/source-nearest no	(bmltsps)	=	4
Delivered power/module actual	(apwrb)	=	10.29 Mw
Delivered current/module	(curpbln)	=	7.92 Amps
Segment height hole ctr-cntr	(segh)	=	66.00 cm [c2]
Overall segment height	(osegh)	=	116.00 cm [c5]
Array height	(arayh1)	=	258.00 cm [c3]
Diameter of insulator	(dins)	=	274.94 cm [D]

Numbers enclosed in [ ] refer to Sketch ITER 002 (also Fig 5)

TABLE 3

AIMING PARAMETERS UNIFORM POWER DENSITY PROFILE

Beam cluster centerline tangent radius Ro	=	6.200	m
Beam energy	=	1.300	MeV
Beam power per channel delivered (pperb)	=	640.000	kW
Total beam power delivered	=	30.720	MW for 48 channels
Beamlet width at accelerator exit	=	6.000	cm

Beamlet size and location (Accelerator exit)

Segment		Distance to segmnt Center		Aiming parameters			At Target beamlet cntrln	
No	Height 2*Bcm	x-dir Ecm	y-dir Dcm	Radius Raim	Dist-h Zaim	Dist-v Za	y	x
	cm	cm	cm	m	m	m	cm	cm
1	4.00	47.50	29.01	6.20	41.77	13.76	-69.03	-5.38
2	4.00	-47.50	29.01	6.20	41.77	13.76	-69.03	5.38
3	4.00	47.50	51.00	6.20	41.77	24.20	-47.00	-5.38
4	4.00	-47.50	51.00	6.20	41.77	24.20	-47.00	5.38
5	4.00	47.50	73.00	6.20	41.77	34.64	-24.99	-5.38
6	4.00	-47.50	73.00	6.20	41.77	34.64	-24.99	5.38
7	4.00	47.50	94.99	6.20	41.77	45.07	-3.01	-5.38
8	4.00	-47.50	94.99	6.20	41.77	45.07	-3.01	5.38
9	4.00	47.50	555.36	6.20	41.77	37.10	-140.71	-5.38
10	4.00	-47.50	555.36	6.20	41.77	37.10	-140.71	5.38
11	4.00	47.50	577.12	6.20	41.77	38.56	-118.84	-5.38
12	4.00	-47.50	577.12	6.20	41.77	38.56	-118.84	5.38
13	4.00	47.50	598.88	6.20	41.77	40.01	-97.14	-5.38
14	4.00	-47.50	598.88	6.20	41.77	40.01	-97.14	5.38
15	4.00	47.50	620.64	6.20	41.77	41.46	-75.45	-5.38
16	4.00	-47.50	620.64	6.20	41.77	41.46	-75.45	5.38
17	4.00	47.50	679.59	6.20	41.77	35.43	-212.34	-5.38
18	4.00	-47.50	679.59	6.20	41.77	35.43	-212.34	5.38
19	4.00	47.50	701.20	6.20	41.77	36.55	-190.89	-5.38
20	4.00	-47.50	701.20	6.20	41.77	36.55	-190.89	5.38
21	4.00	47.50	722.80	6.20	41.77	37.68	-169.19	-5.38
22	4.00	-47.50	722.80	6.20	41.77	37.68	-169.19	5.38
23	4.00	47.50	744.41	6.20	41.77	38.81	-147.50	-5.38
24	4.00	-47.50	744.41	6.20	41.77	38.81	-147.50	5.38

Another 24 beamlets are mirrored on the negative y axis

Target coordinates are for the beamlet centerline at the plasma a distance (Zv) of 46.5 m from the accelerator exit.

TABLE 6

HEAT FLUX ON THE ION DUMPS DURING COMMISSIONING -- TWO BEAM CHANNELS

Atomic mass no = 2 ion = D
Beam energy (u) = 1.30 Mev
B field at dumps = 100.00 Gauss
Ion path radius = 23.21 m
Distance between dumps = 20.00 cm
Distance accel to dumps = 6.00 m

Z(cm)	=	.00	96.34	136.22	166.79	192.55	215.24	235.73	254.56	272.08	288.52	304.06
THETA(deg)	=	.00	2.38	3.36	4.12	4.76	5.32	5.83	6.30	6.73	7.14	7.53
Y(cm) - kw/cm2												
10.00	q	.00	0.00	.01	.07	.18	.26	.22	.11	.02	0.00	.00
	qo	.00	.02	.20	.96	2.18	2.76	2.18	.96	.20	.02	.00
12.00	q	.00	0.00	.03	.20	.53	.76	.65	.31	.07	.01	.00
	qo	.00	.05	.58	2.83	6.43	8.15	6.43	2.83	.58	.05	.00
14.00	q	.00	0.00	.07	.40	1.05	1.48	1.28	.61	.13	.01	.00
	qo	.00	.10	1.13	5.55	12.60	15.98	12.60	5.55	1.13	.10	.00
16.00	q	.00	.01	.09	.52	1.37	1.94	1.68	.80	.17	.02	.00
	qo	.00	.13	1.49	7.28	16.53	20.96	16.53	7.28	1.49	.13	.00
18.00	q	.00	0.00	.08	.46	1.21	1.71	1.48	.70	.15	.01	.00
	qo	.00	.11	1.31	6.41	14.55	18.45	14.55	6.41	1.31	.11	.00
20.00	q	.00	0.00	.05	.27	.71	1.01	.87	.41	.09	.01	.00
	qo	.00	.06	.77	3.78	8.58	10.89	8.58	3.78	.77	.06	.00
22.00	q	.00	0.00	.02	.11	.28	.40	.34	.16	.04	0.00	.00
	qo	.00	.03	.30	1.48	3.37	4.27	3.37	1.48	.30	.03	.00
24.00	q	.00	0.00	0.00	.03	.07	.10	.09	.04	.01	0.00	.00
	qo	.00	.01	.08	.39	.87	1.11	.87	.39	.08	.01	.00
26.00	q	.00	.00	0.00	.01	.01	.02	.02	.01	0.00	.00	.00
	qo	.00	.00	.01	.07	.16	.20	.16	.07	.01	.00	.00
28.00	q	.00	.00	0.00	0.00	.01	.01	.01	0.00	0.00	.00	.00
	qo	.00	.00	.01	.04	.09	.11	.09	.04	.01	.00	.00
30.00	q	.00	.00	0.00	.02	.04	.06	.05	.02	0.00	.00	.00
	qo	.00	.00	.04	.22	.49	.62	.49	.22	.04	.00	.00
32.00	q	.00	0.00	.01	.07	.18	.26	.22	.11	.02	0.00	.00
	qo	.00	.02	.20	.96	2.18	2.77	2.18	.96	.20	.02	.00
34.00	q	.00	0.00	.03	.20	.53	.76	.65	.31	.07	.01	.00
	qo	.00	.05	.58	2.84	6.44	8.17	6.44	2.84	.58	.05	.00
36.00	q	.00	0.00	.07	.40	1.05	1.48	1.28	.61	.13	.01	.00
	qo	.00	.10	1.14	5.56	12.62	16.00	12.62	5.56	1.14	.10	.00
38.00	q	.00	.01	.09	.52	1.37	1.94	1.68	.80	.17	.02	.00
	qo	.00	.13	1.49	7.28	16.53	20.96	16.53	7.28	1.49	.13	.00
40.00	q	.00	0.00	.08	.46	1.21	1.71	1.48	.70	.15	.01	.00
	qo	.00	.11	1.31	6.40	14.54	18.44	14.54	6.40	1.31	.11	.00
42.00	q	.00	0.00	.05	.27	.71	1.01	.87	.41	.09	.01	.00
	qo	.00	.06	.77	3.77	8.57	10.87	8.57	3.77	.77	.06	.00
X(cm)	=	.00	2.00	4.00	6.00	8.00	10.00	12.00	14.00	16.00	18.00	20.00

NOTE: q = heat flux at leading edge of dumps for coordinates Y and Z (see Fig 24 and 25)
qo = heat flux normal to beam for coordinates Y and X at Z=0.0

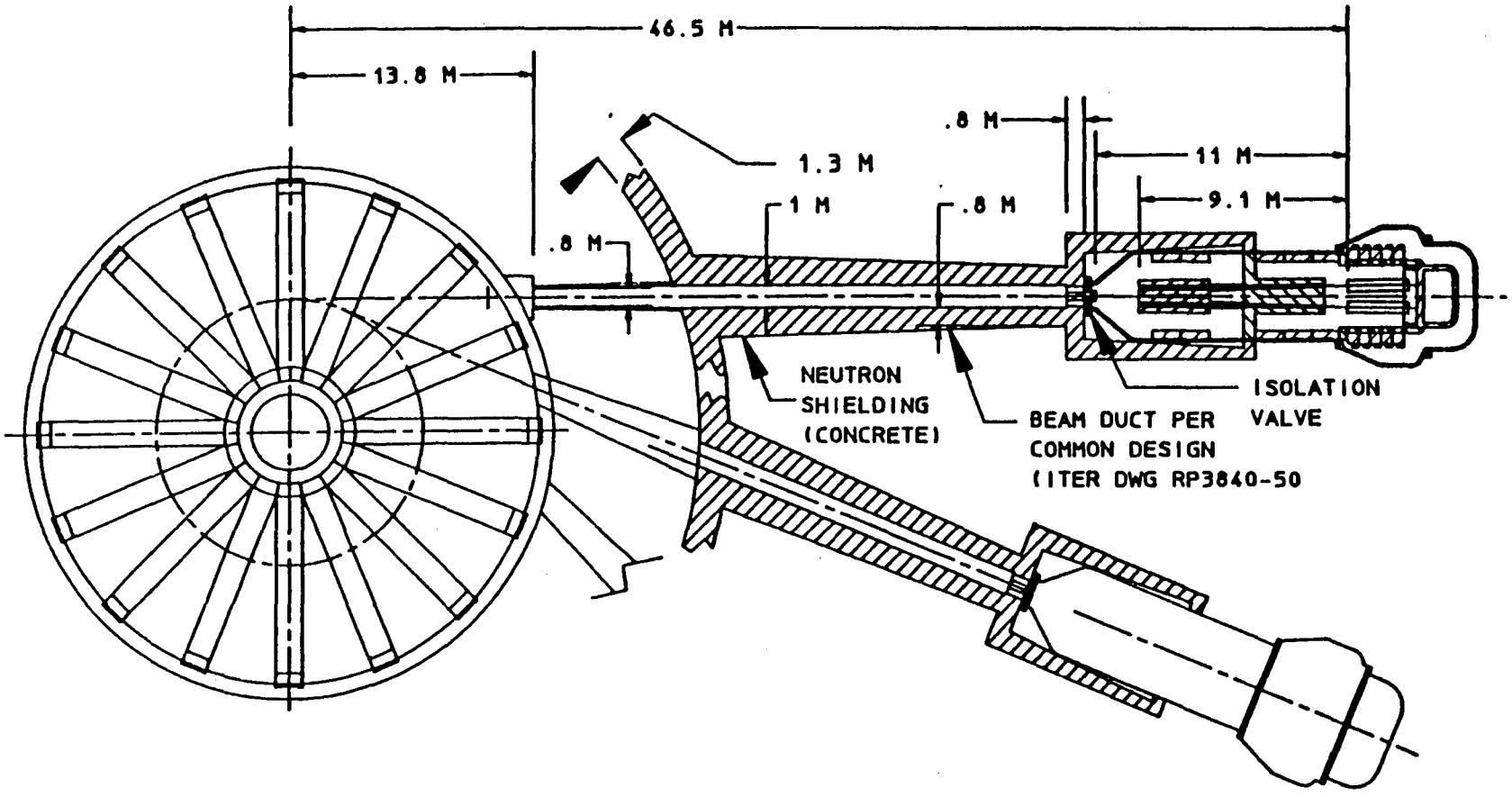

FIG. 1 US ITER NEUTRAL BEAM CURRENT DRIVE SYSTEM

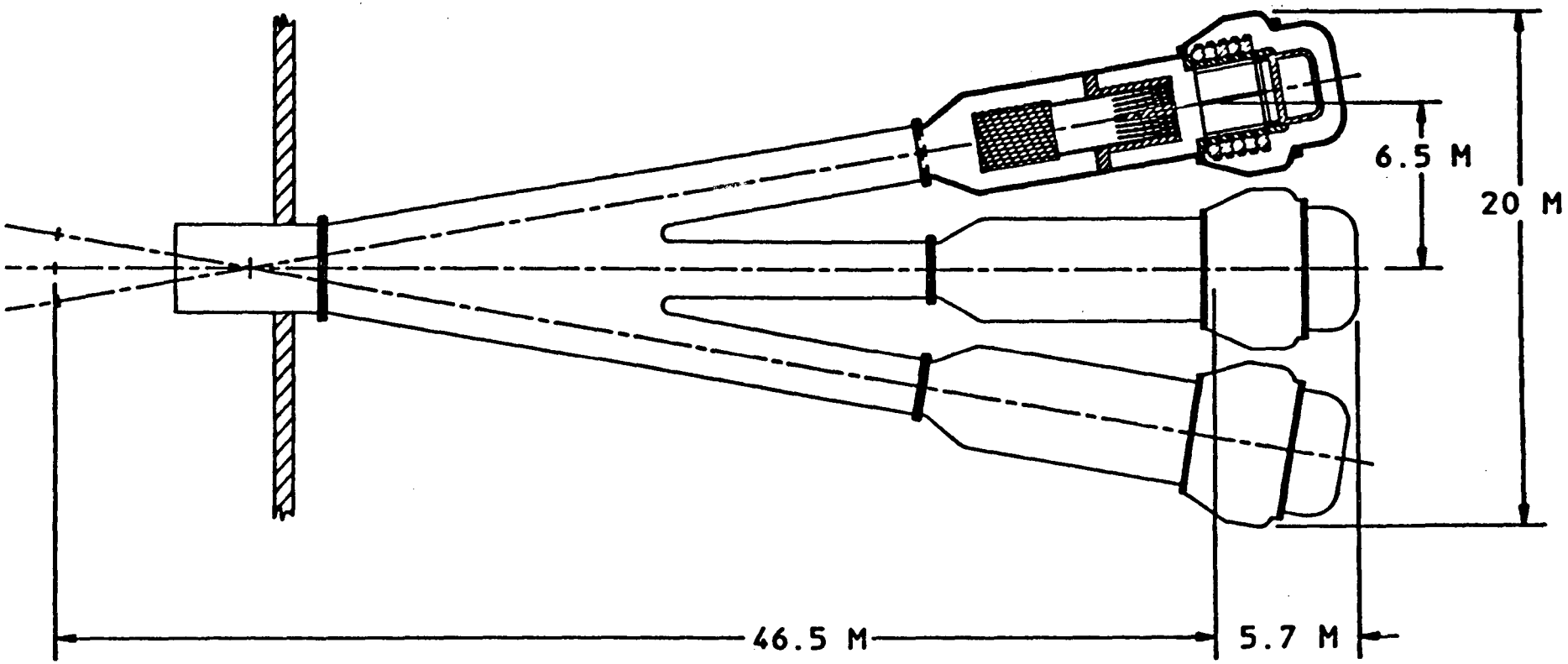

FIG. 2 BEAMLINE ELEVATION VIEW

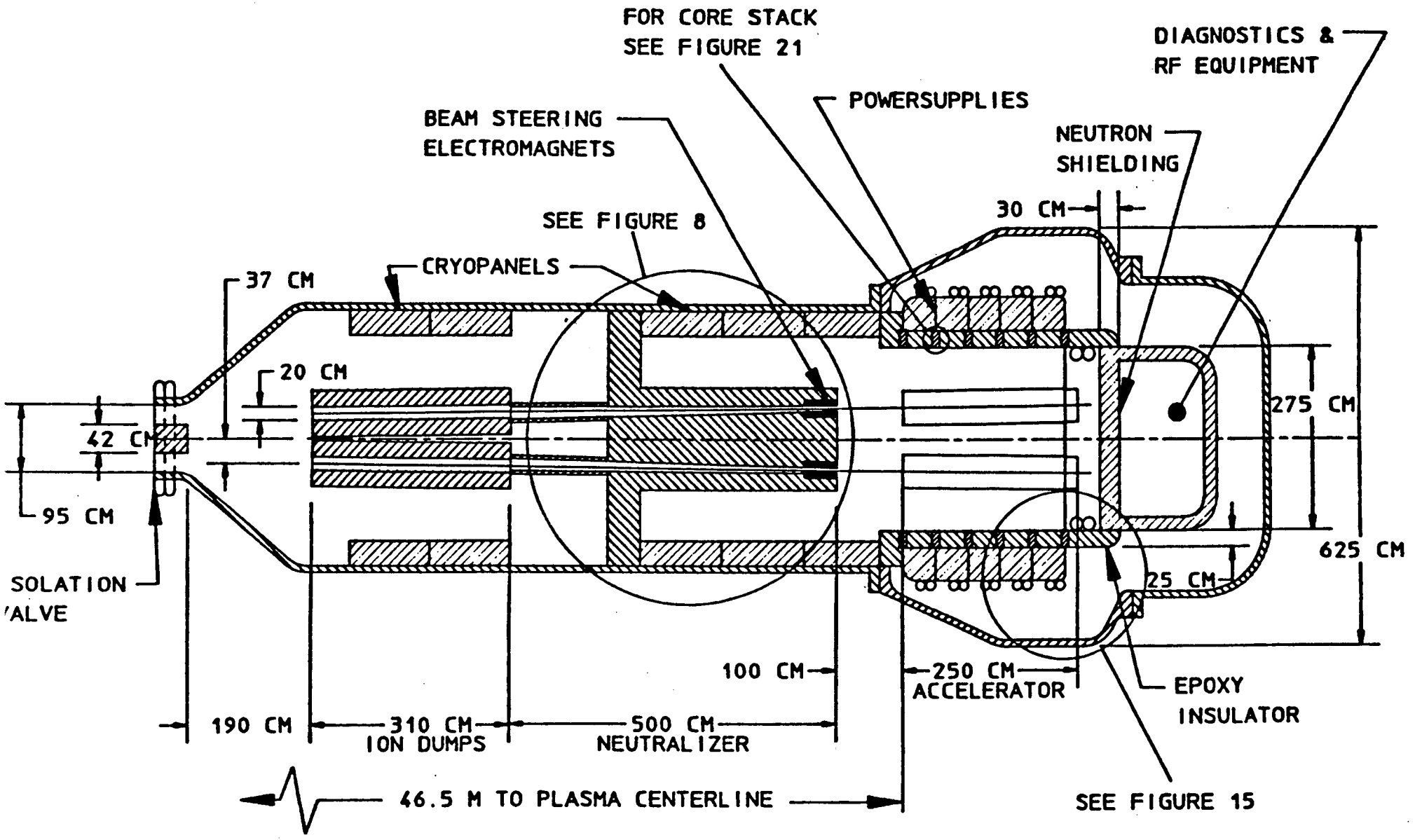

FIG. 3 MODULE COMPONENTS - PLAN VIEW

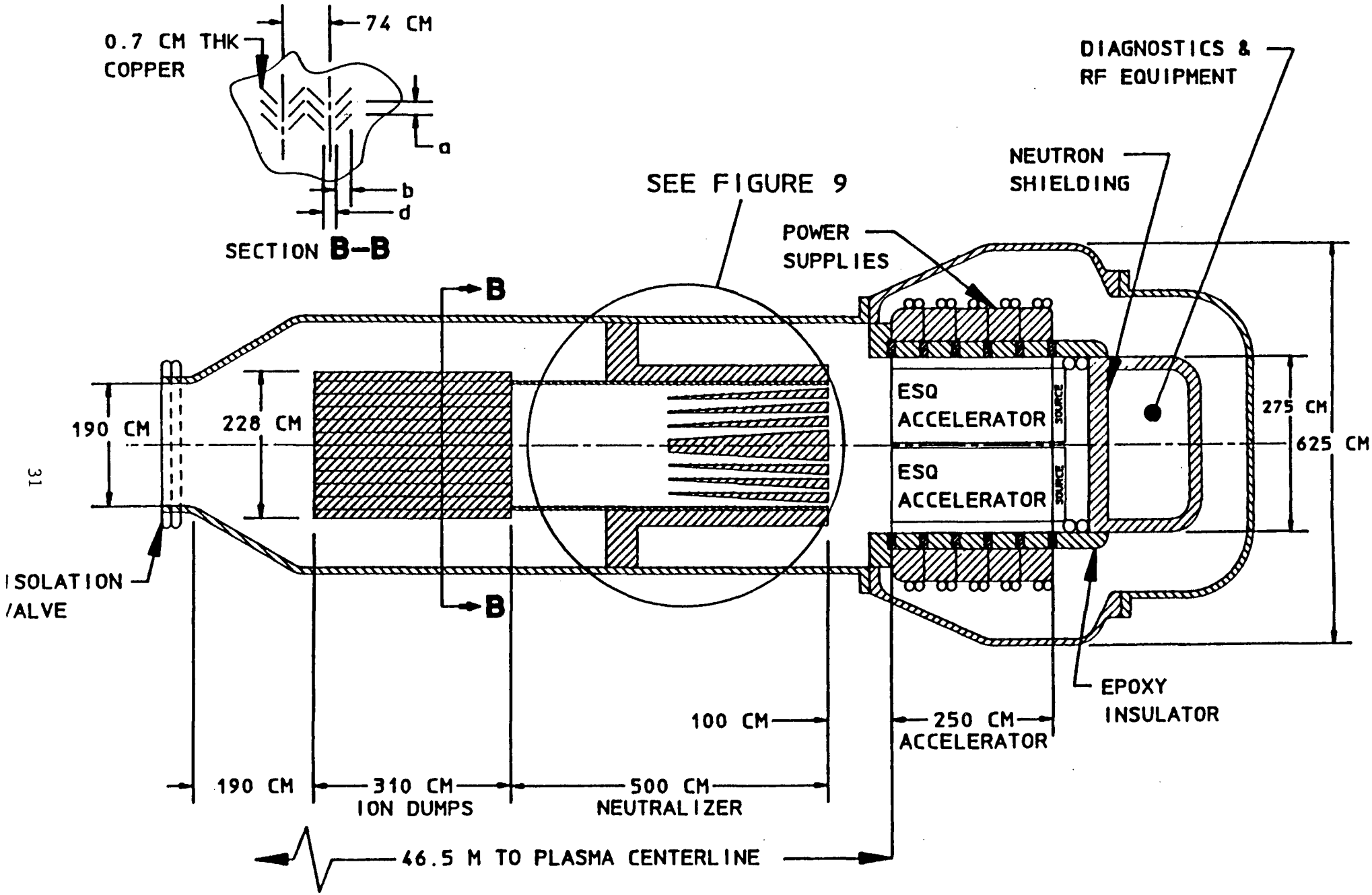

FIG. 4 MODULE COMPONENTS - SIDE VIEW

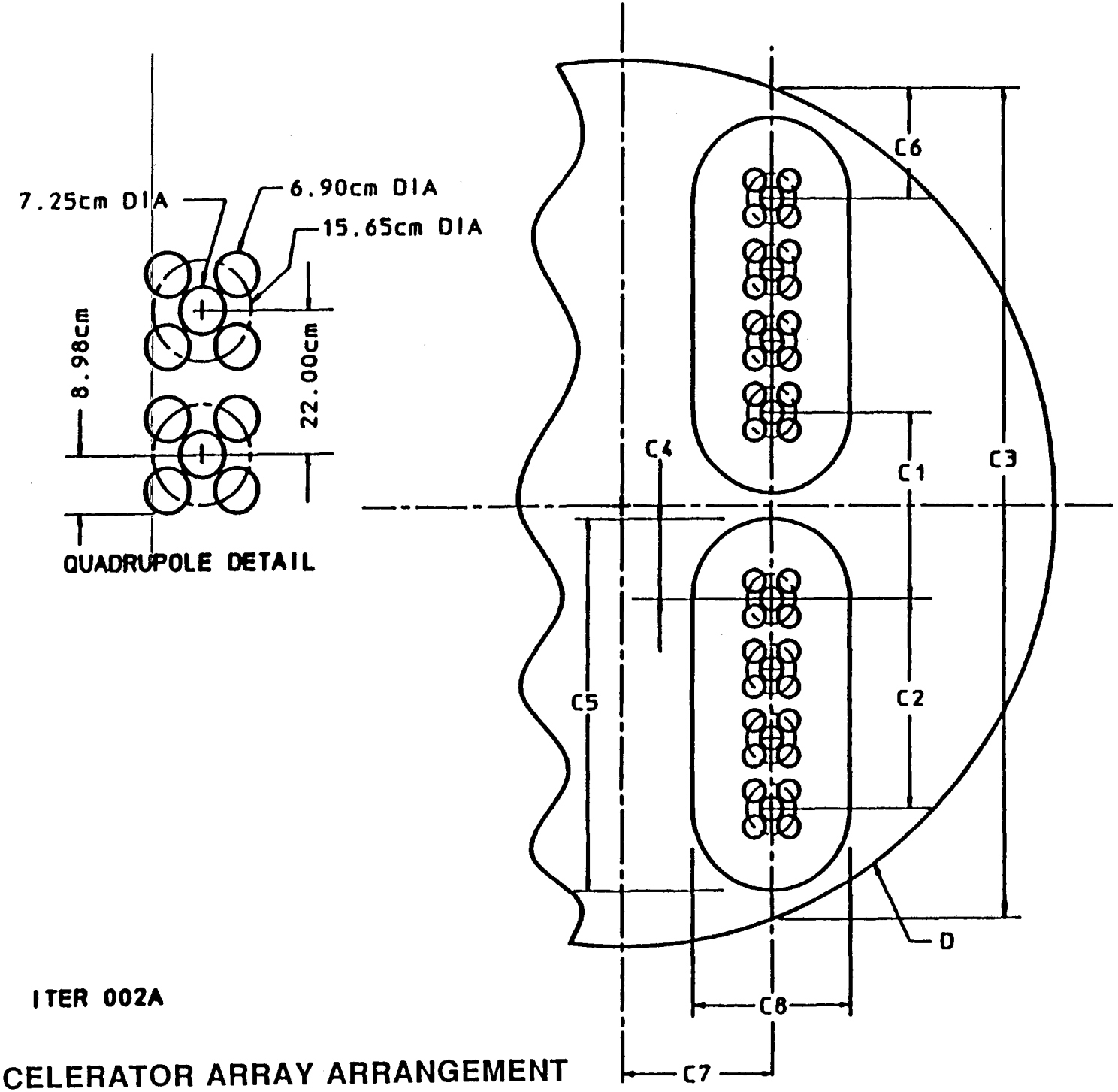

FIG. 5 ACCELERATOR ARRAY ARRANGEMENT

FIG. 6 POWER DENSITY AT PLASMA TARGET

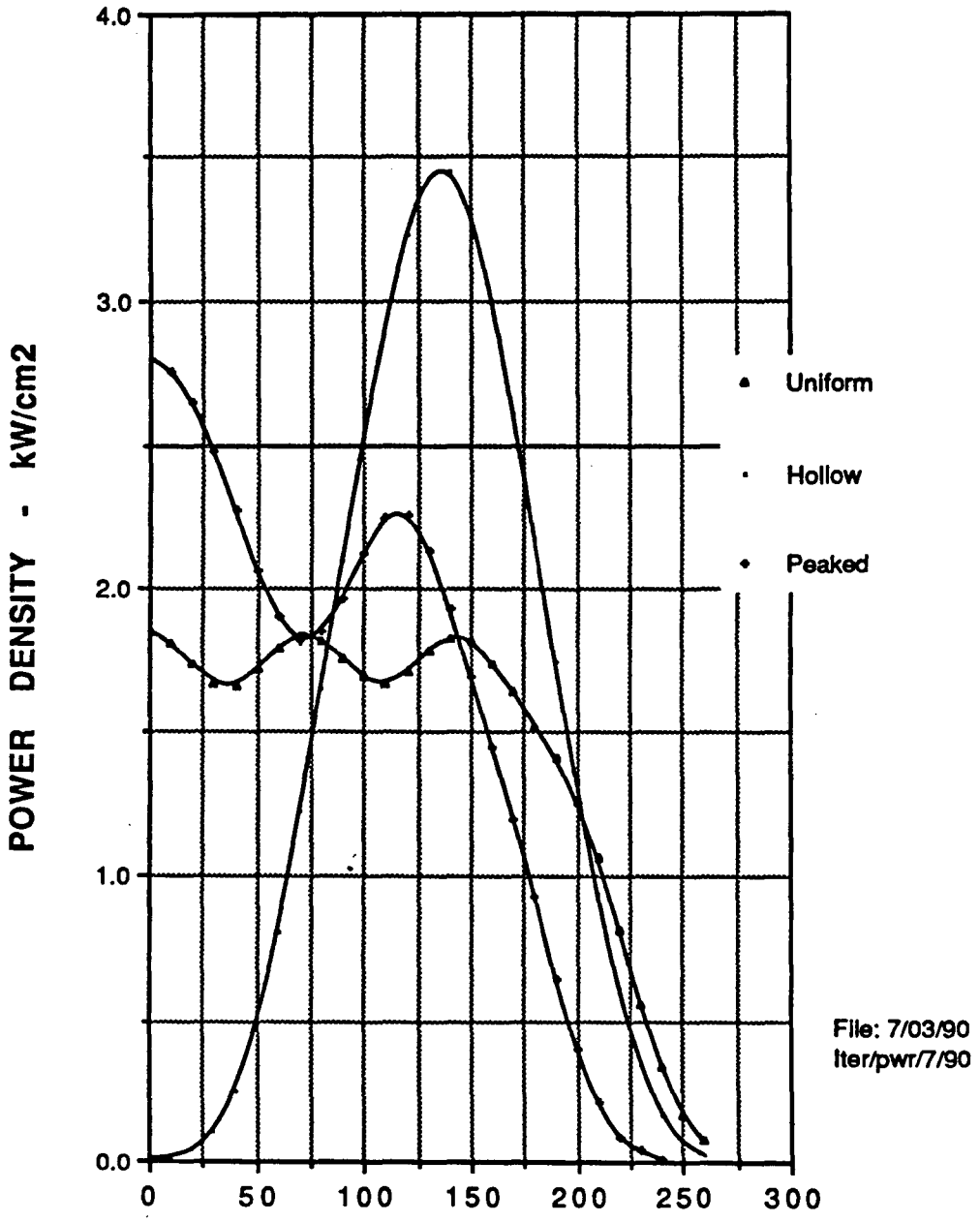

VERTICAL DISTANCE FROM CENTERLINE - cm

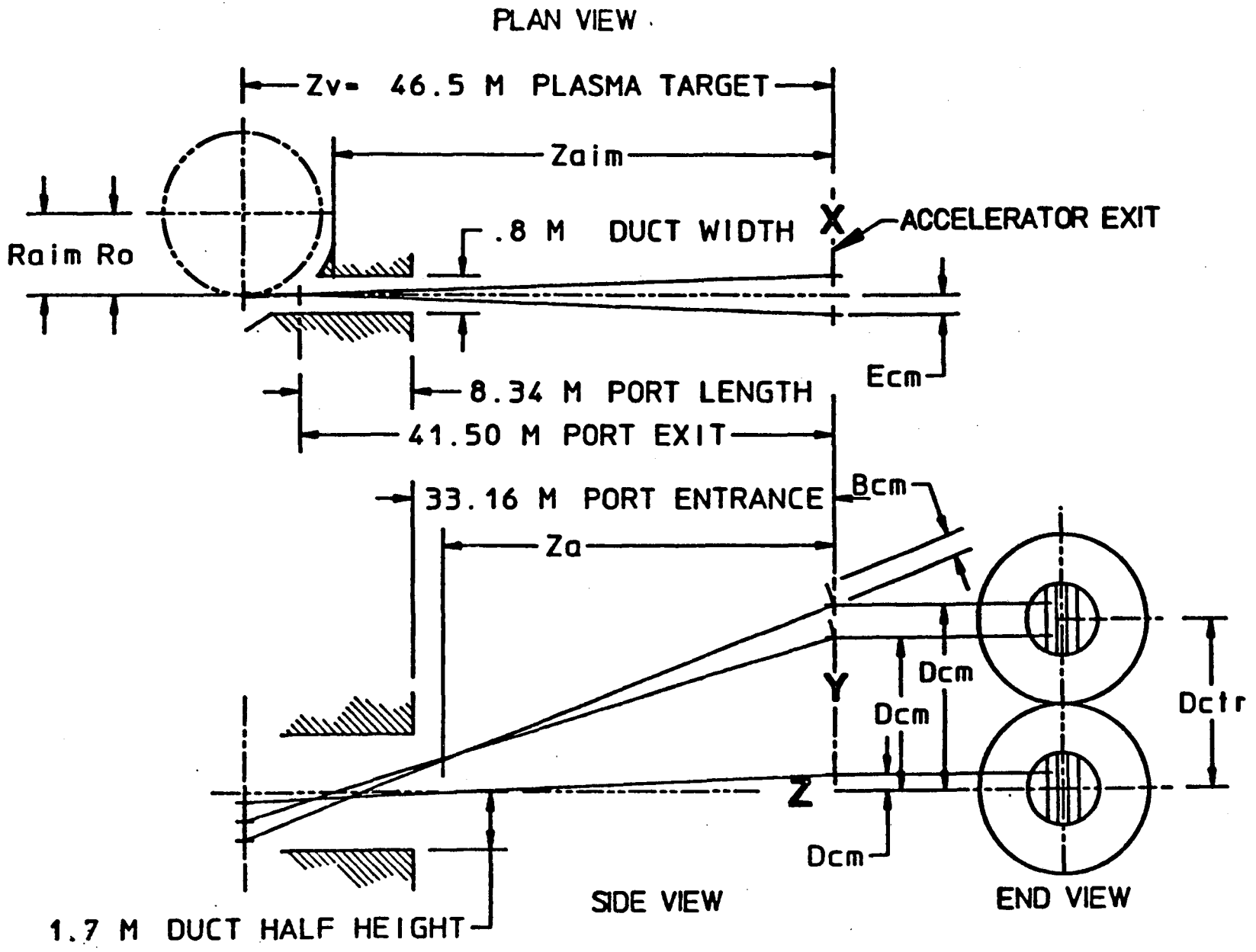

FIG. 7 ACCELERATOR ARRAY AIMING PARAMETERS

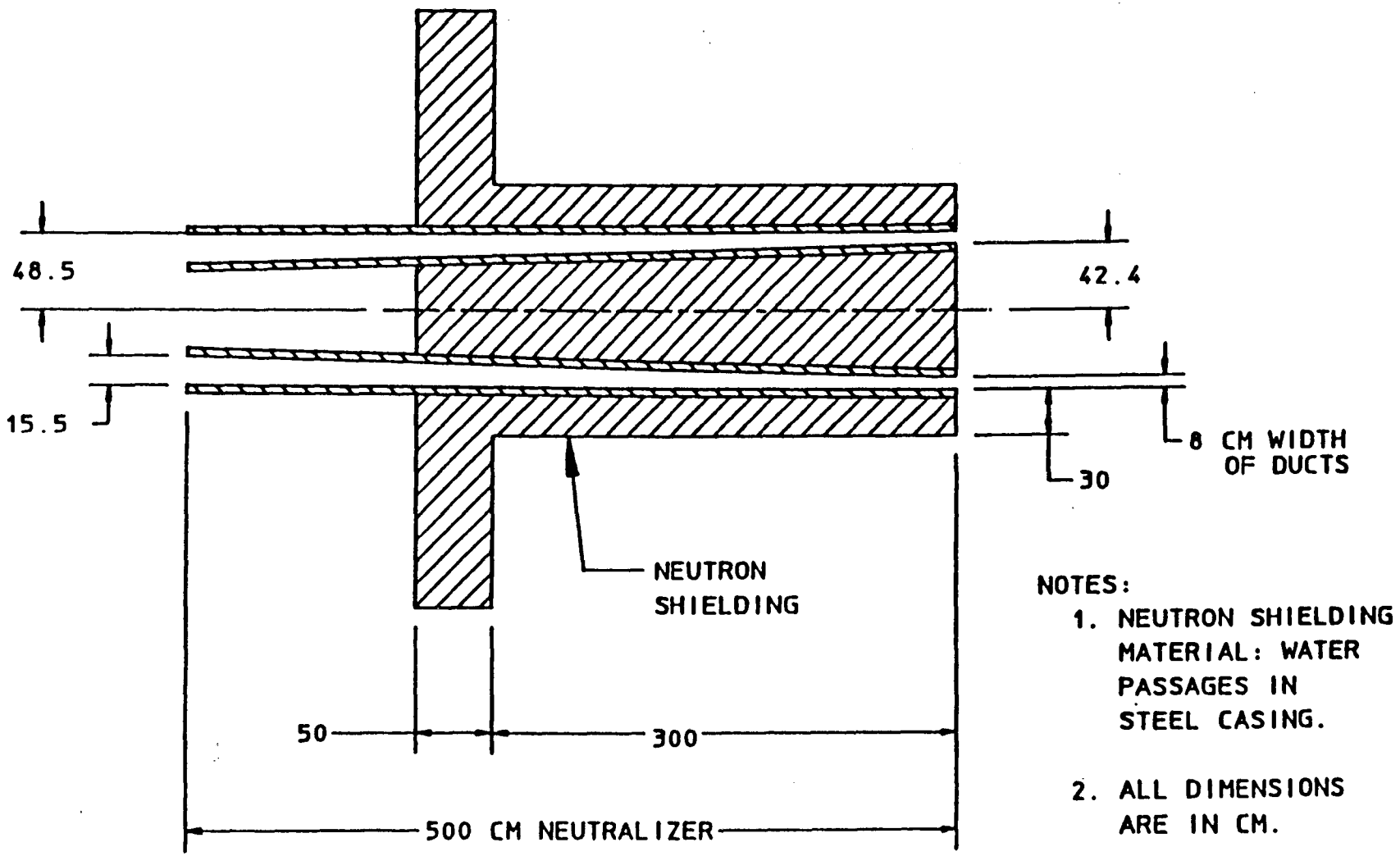

FIG. 8 NEUTRALIZER DETAIL - PLAN VIEW

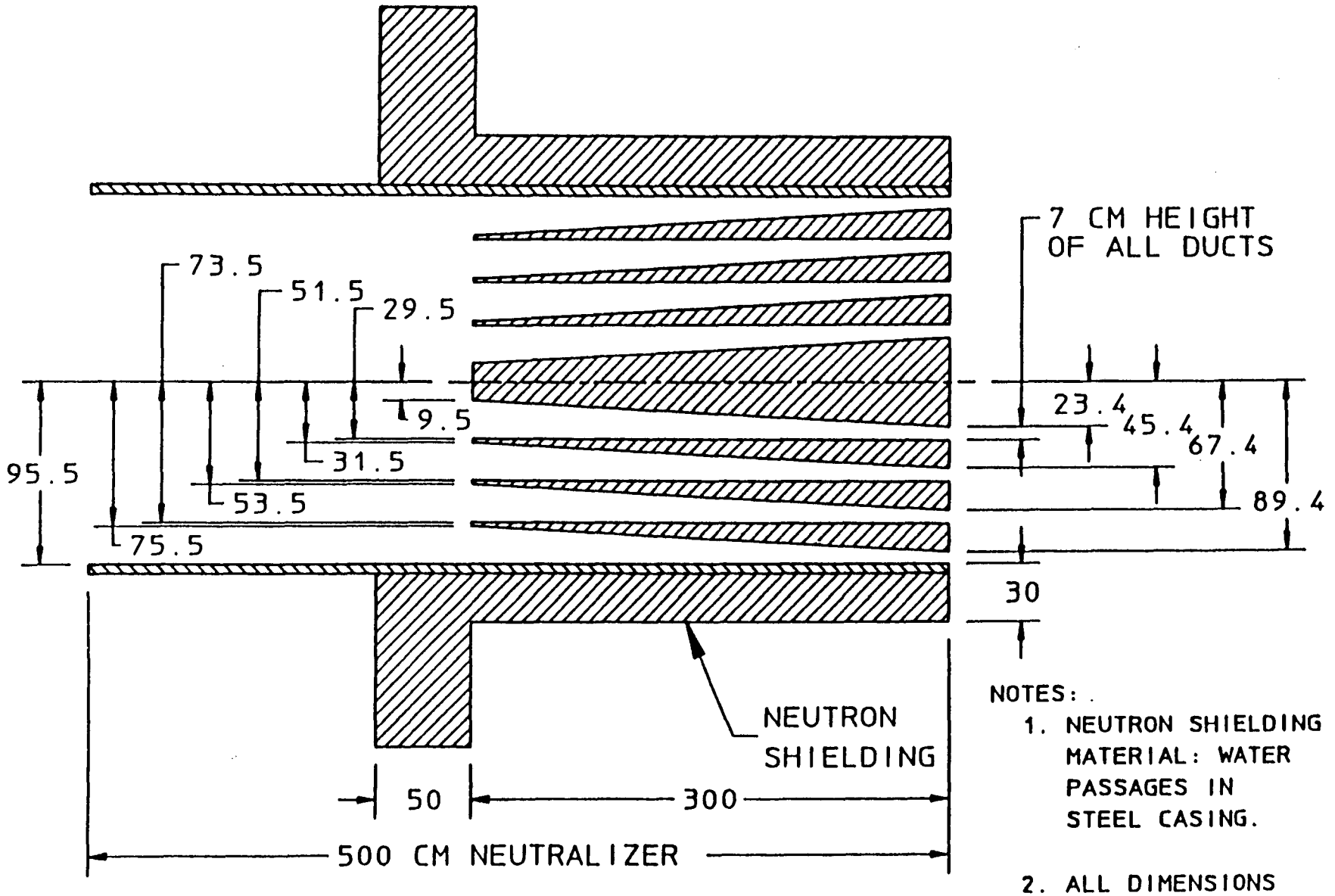

NOTES:

1. NEUTRON SHIELDING MATERIAL: WATER PASSAGES IN STEEL CASING.

2. ALL DIMENSIONS ARE IN CM.

FIG. 9 NEUTRALIZER DETAIL - SIDE VIEW

From computer simulation:
Beamlet at Accelerator exit for a barium surface conversion source

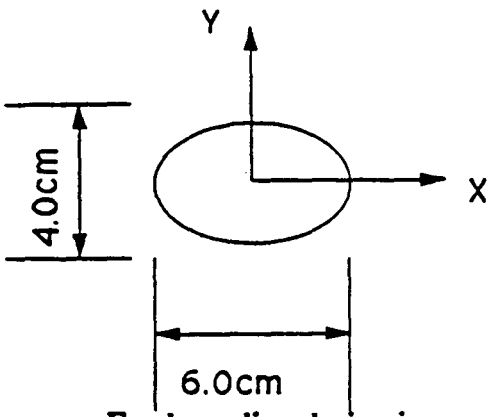

1/e half angle divergence
wxe = 0.0046 rad
wye = 0.0069 rad

For beamline design increase divergence by 50% and add 0.001radian for misalignment. The resulting skim half angles are :

wxs = 0.0046 X 1.5 + 0.001 = 0.0079 radians
wys = 0.0069 X 1.5 + 0.001 = 0.0114 radians
These skim angles correspond to approximately 98 % transmission

Using these half angles the envelope of the individual beamlets is:

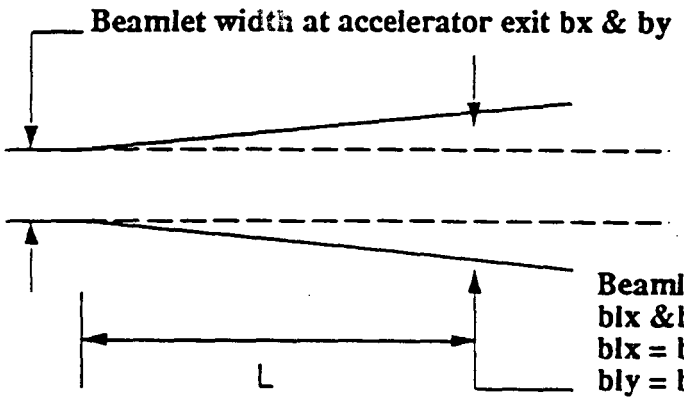

Beamlet width at distance L
blx &bly
blx = bx + 2 X wxs X L
bly = by + 2 X wys X L

Location	L-cm	blx-cm	bly-cm
Accelerator exit	0.0	6.0	4.0
Neutralizer entrance	100.0	8.0	7.0
Neutralizer exit/ Dump entrance	600.0	15.5	18.0
Dump exit	910.0	20.5	25.0
Module isolation valve	1200.0	25.0	31.5

FIG. 10 SKIM ANGLE AND APERTURE DIMENSIONS

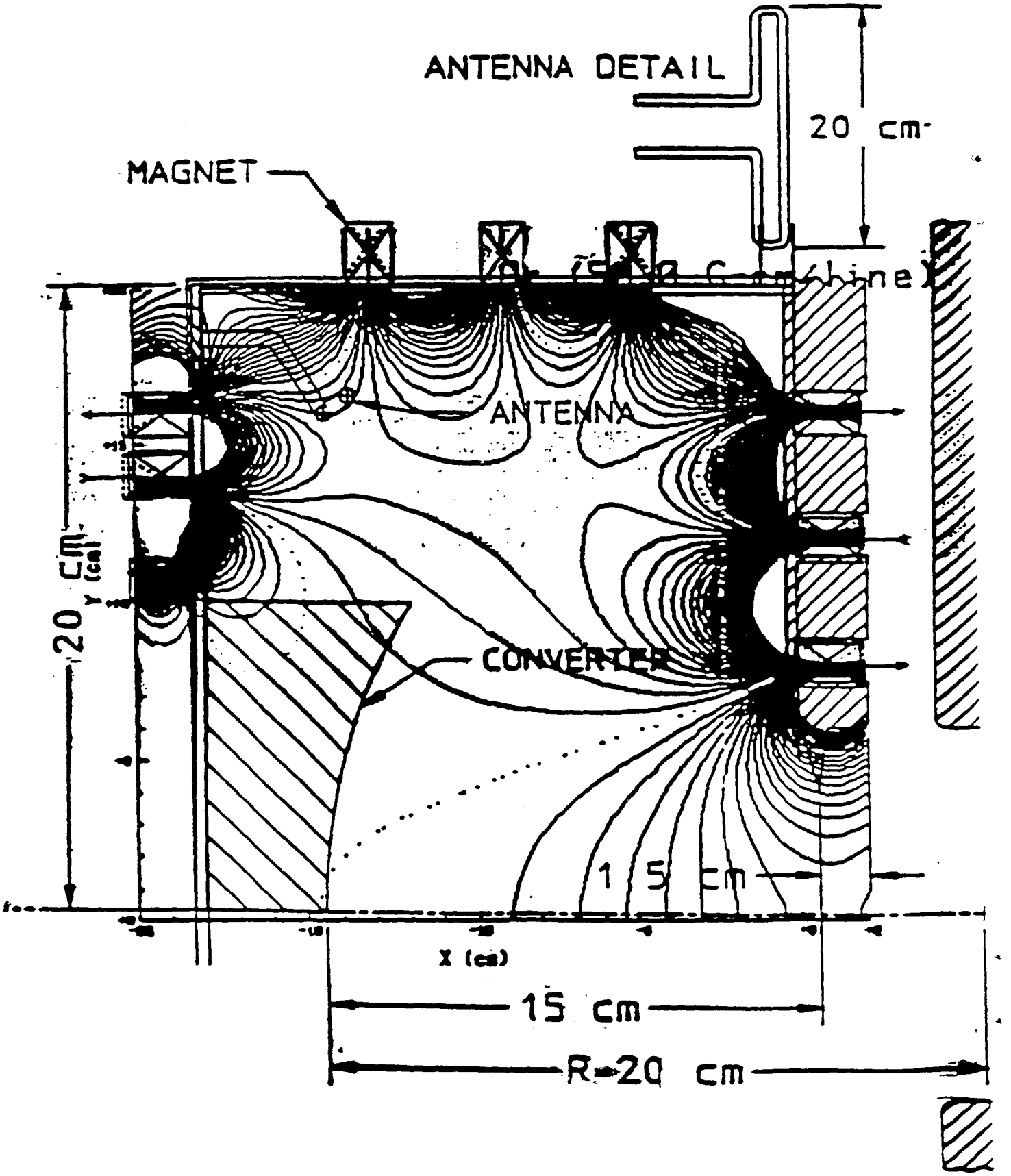

FIG. 11 SURFACE CONVERSION SOURCE MAGNETIC CALCULATIONS

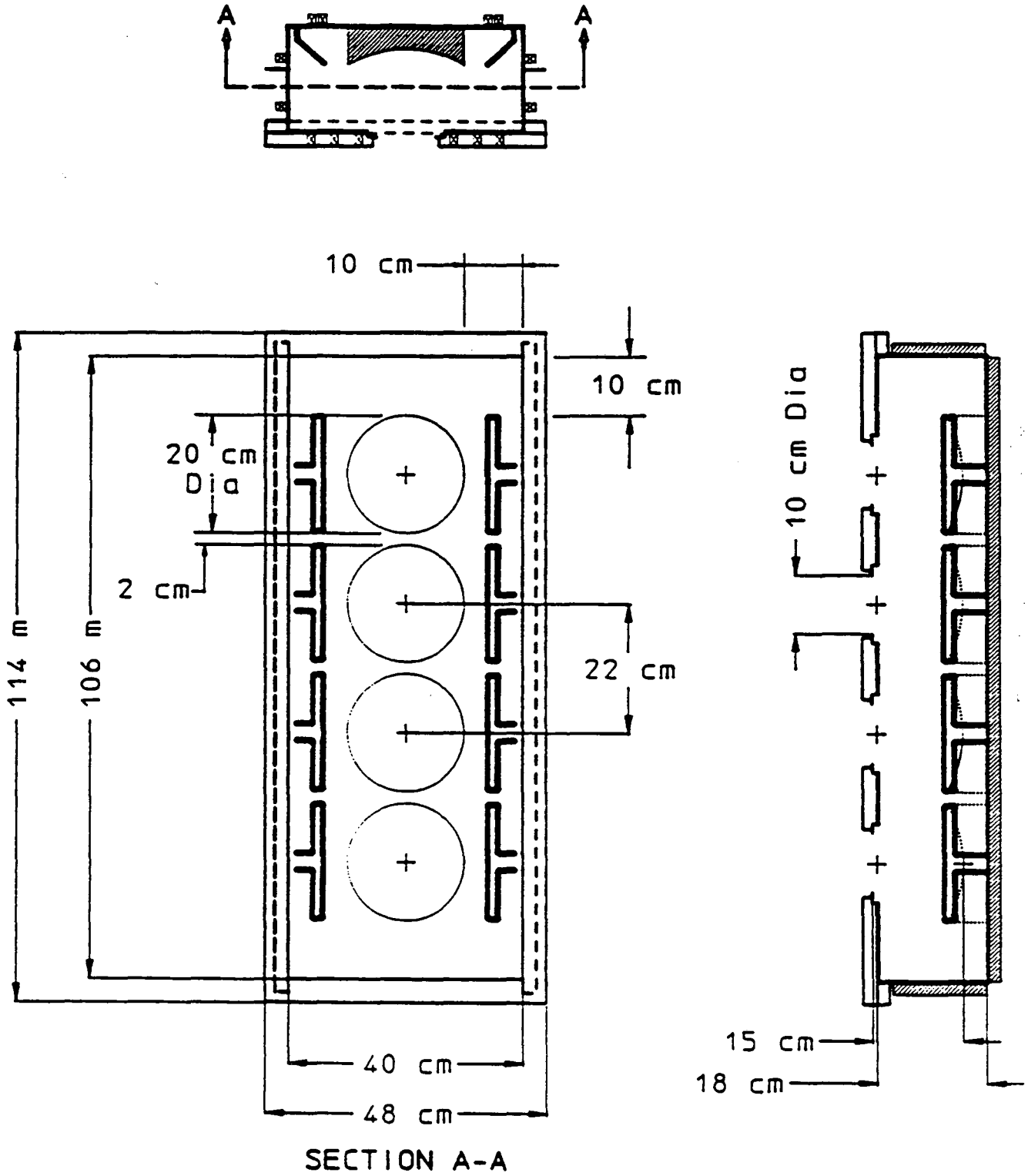

FIG. 12 FOUR CONVERTER BARIUM SURFACE CONVERSION SOURCE

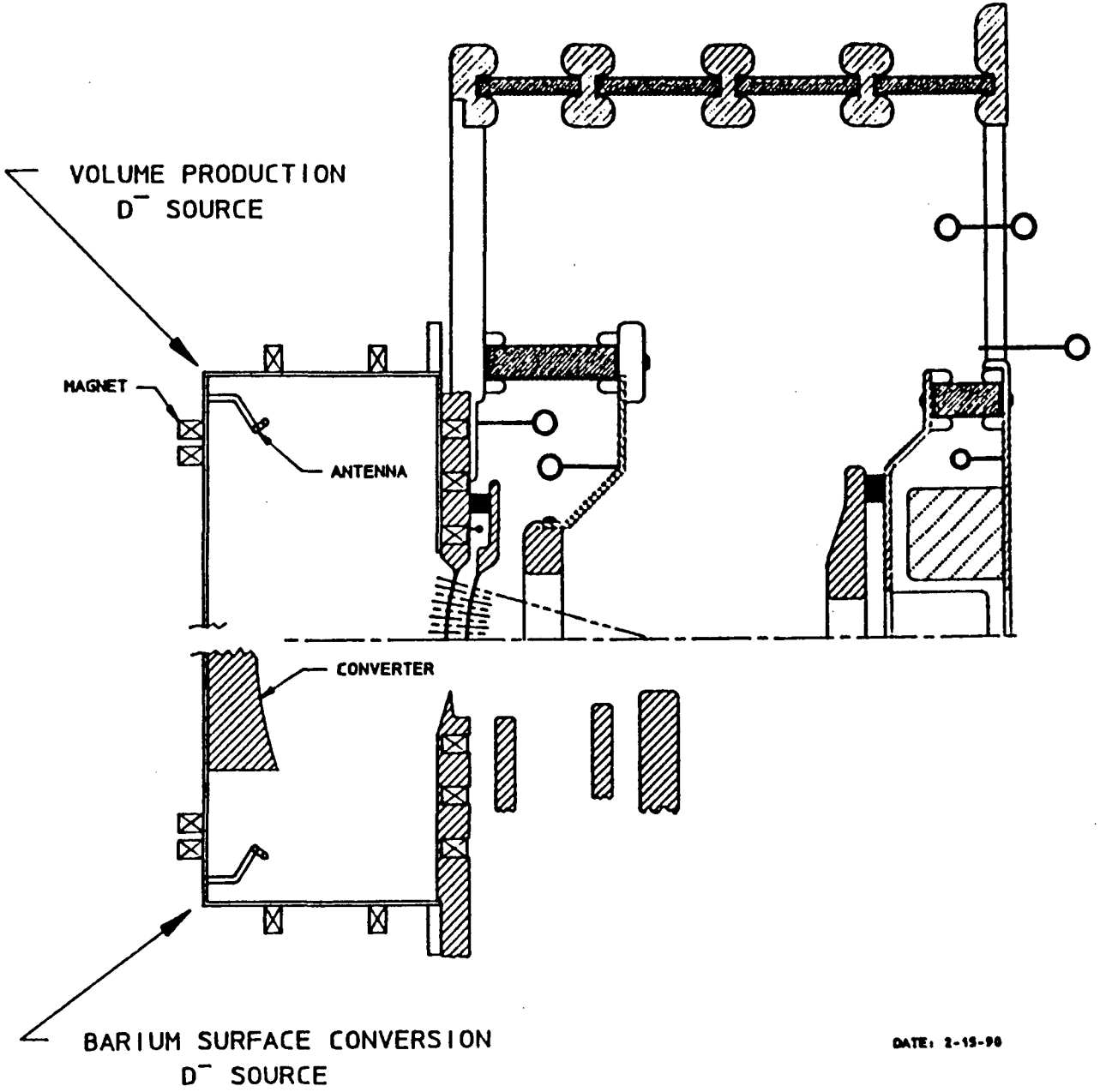

FIG. 13 BARIUM SURFACE CONVERSION SOURCE AND VOLUME PRODUCTION SOURCE

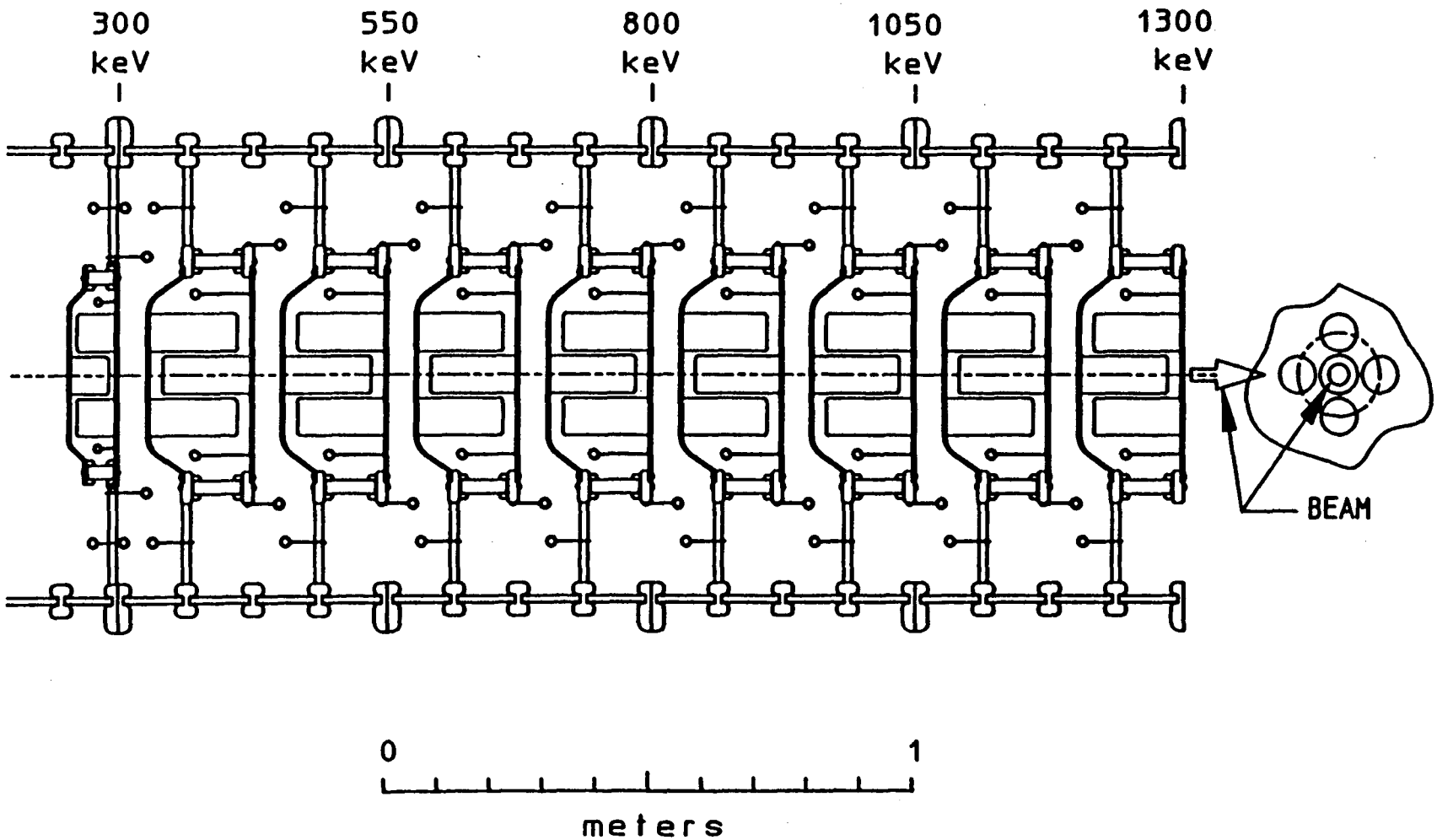

FIG 14 SINGLE CHANNEL 1 AMPERE ESQ ACCELERATOR

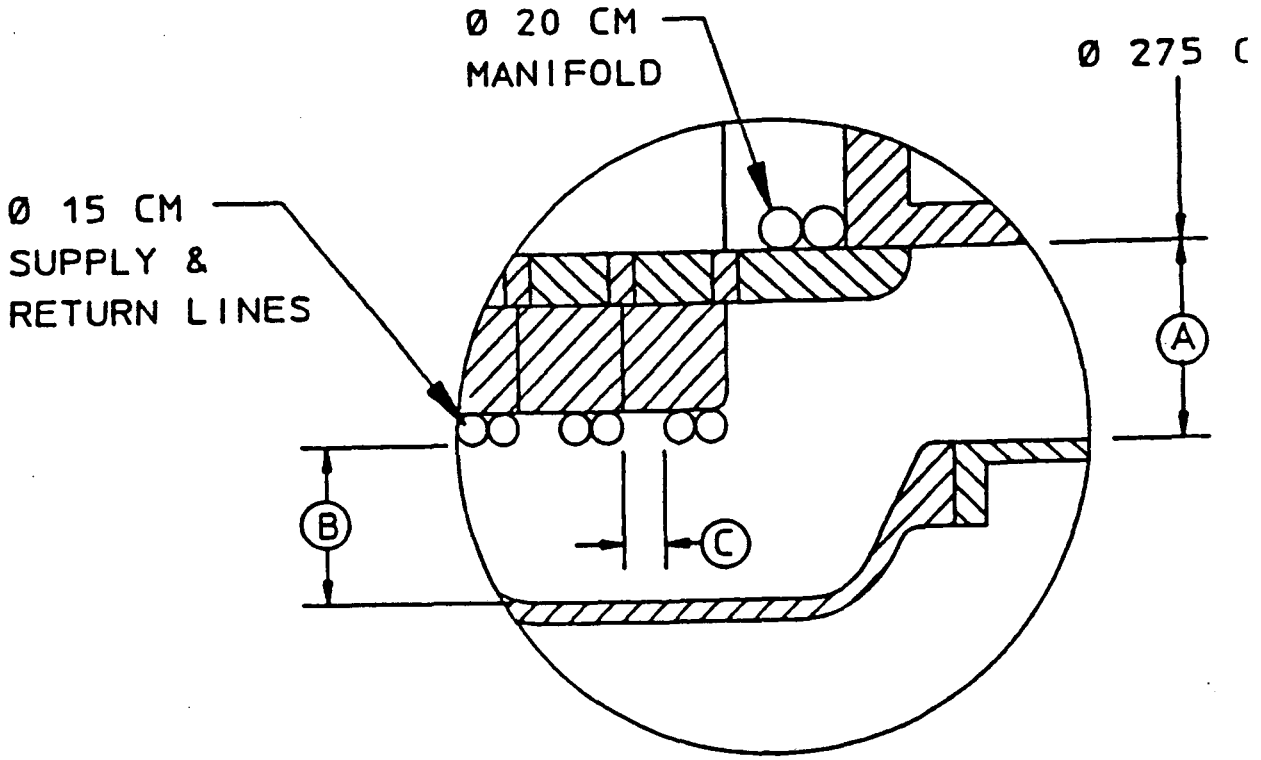

Sketch is detail from Fig. 3

For low pressure SF_6 the breakdown voltage is $V_{br} = 89\ p\ d / f$
p = gas pressure - atm (abs), p = 1atm in this case, d = gap - cm

A - - Coaxial cylinder - back end of module

$f = d / [r \ln (r+d) / r]$ d = 75 cm r = 137.5 cm
f = 1.25
$V_{br} = 89 (1) \times 75 / 1.25 = 5340$ kV, Safety margin = 5340/1300 = 4.1

B - - Cylinder to a plane - cooling line to vacuum vessel wall

$f = 0.9\ d / [r \ln (r+d) / r]$ d = 75 cm r = 7.5 cm
f = 3.75
$V_{br} = 89 (1) \times 75 / 3.75 = 1780$ kV, Safety margin = 1780/1300 = 1.35

C - - Parallel cylinders - cooling line to cooling line

$f = 0.45\ d / [r \ln (r+0.5d) / r]$ d = 20 cm r = 7.5 cm
f = 1.4
$V_{br} = 89 (1) \times 20 / 1.4 = 1270$ kV, Safety margin = 1270/300 = 4.2

FIG. 15 BREAKDOWN VOLTAGE IN SF_6 GAP

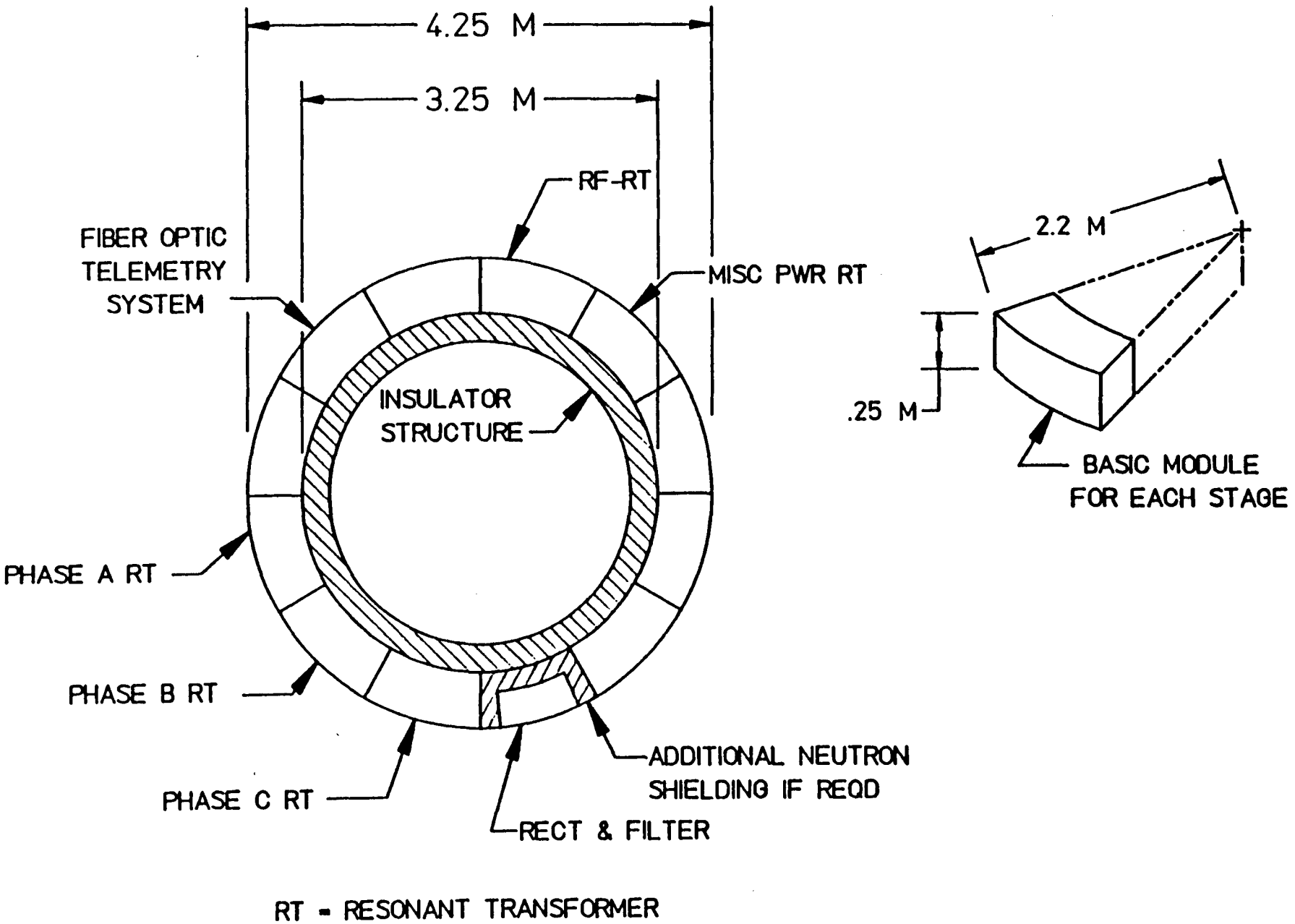

FIG. 16 POWER SUPPLY COMMPONENTS STACKED AROUND HIGH VOLTAGE INSULATOR

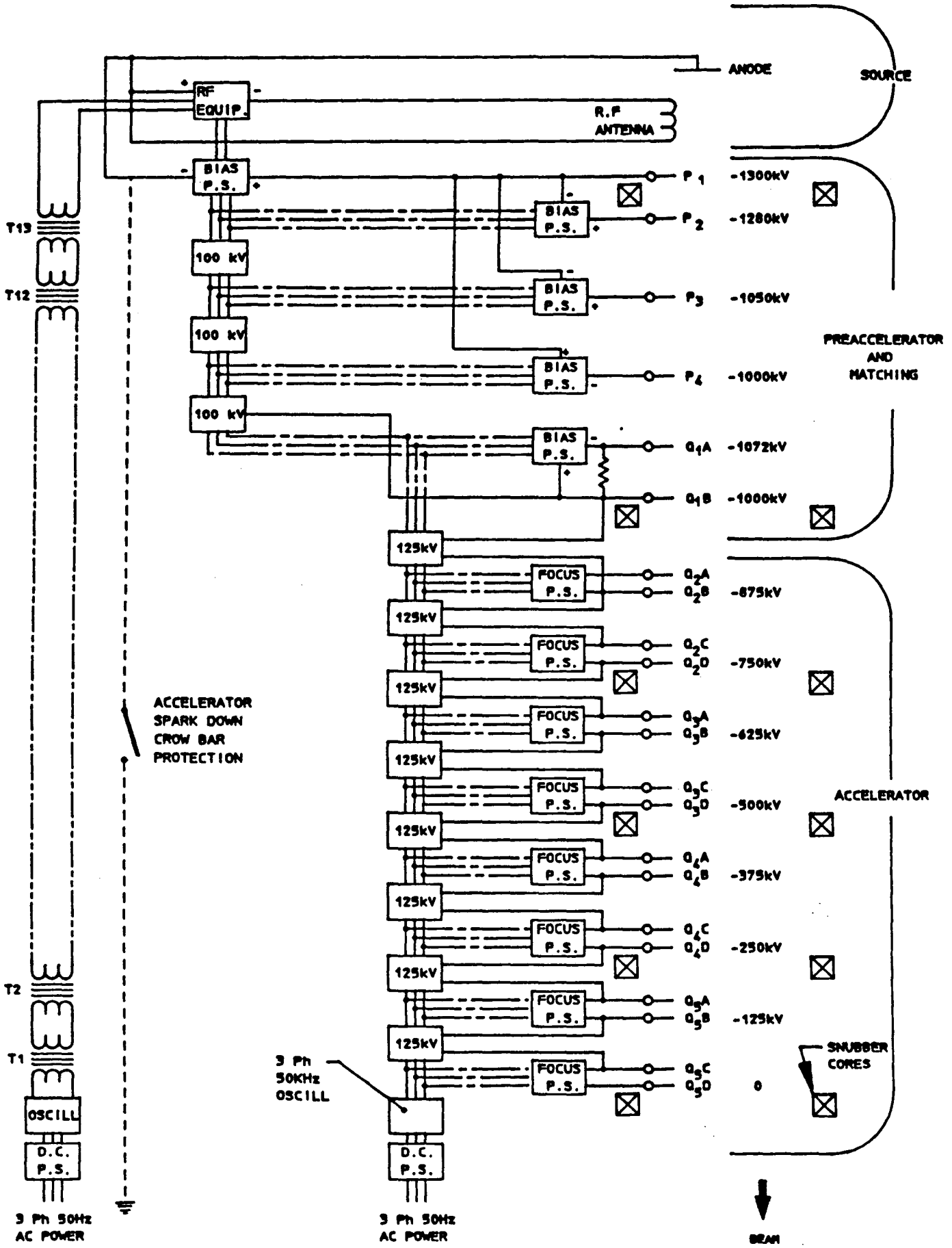

FIG 17 BLOCK DIAGRAM OF ELECTRICAL SYSTEM

FIG. 18 ITER ACCELERATOR SPARK DOWN SCHEMATIC

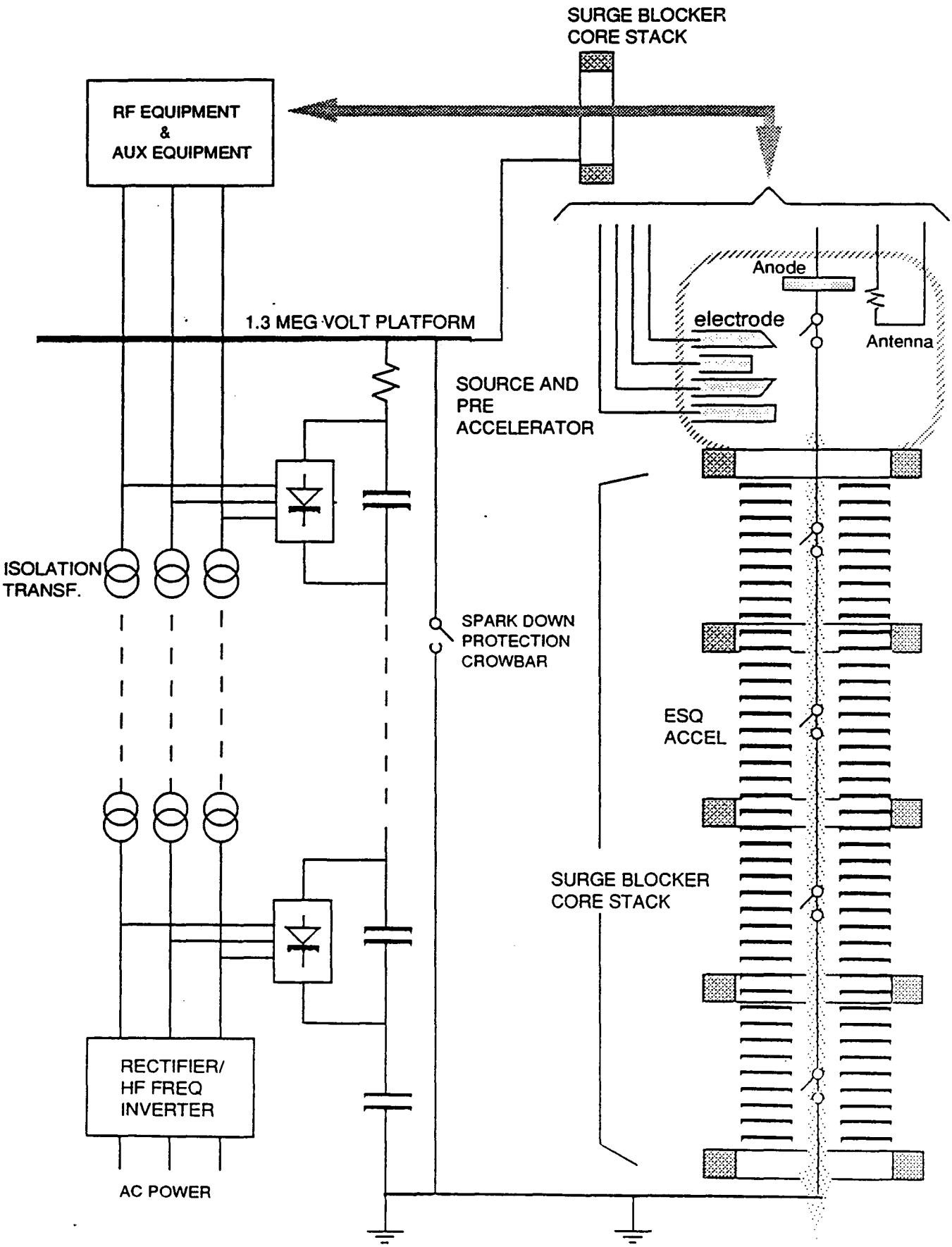

FIG. 19 ACCELERATOR SPARK DOWN EQUIVALENT CIRCUIT

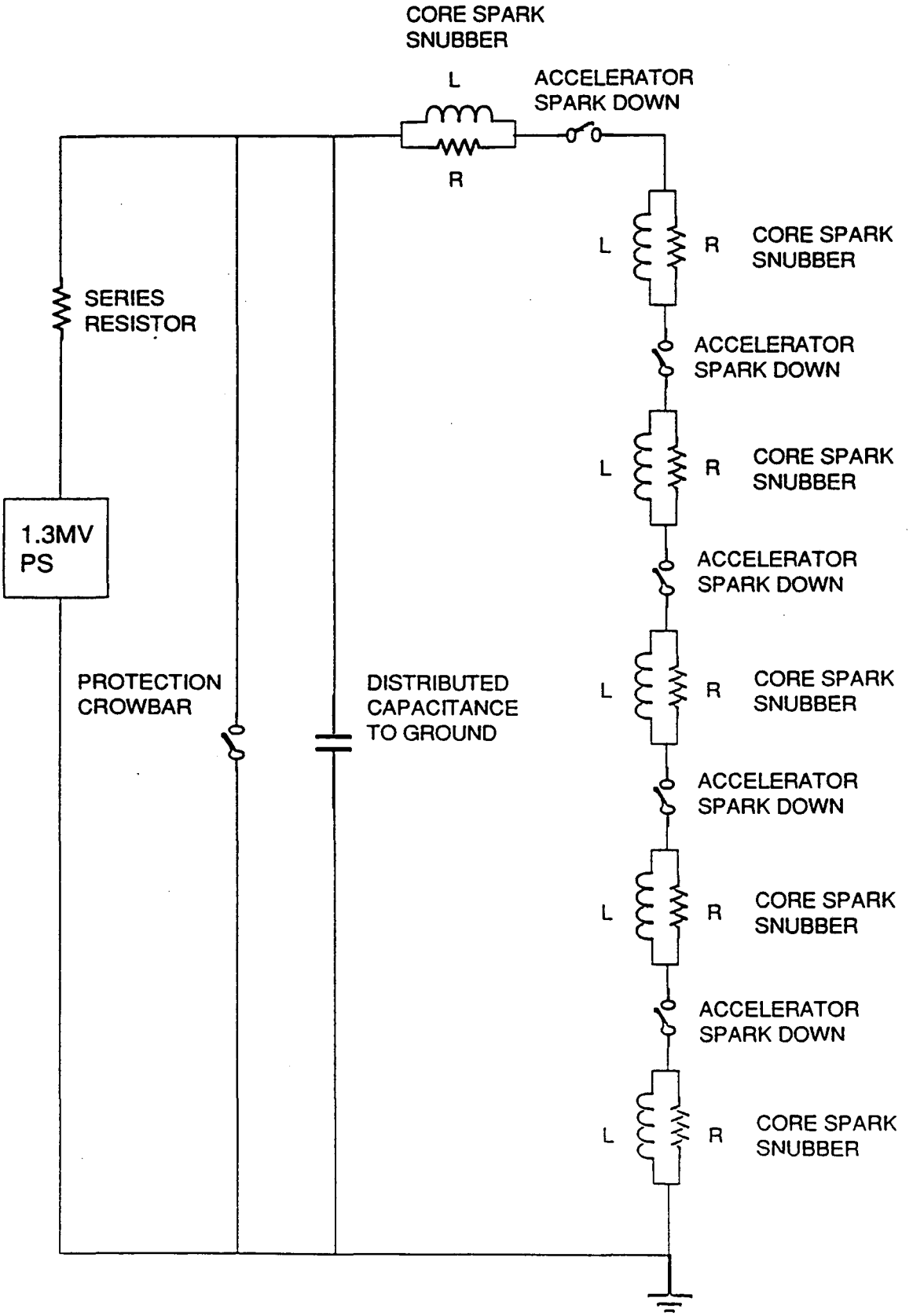

FIG. 20 CORE STACK CONSIDERATIONS

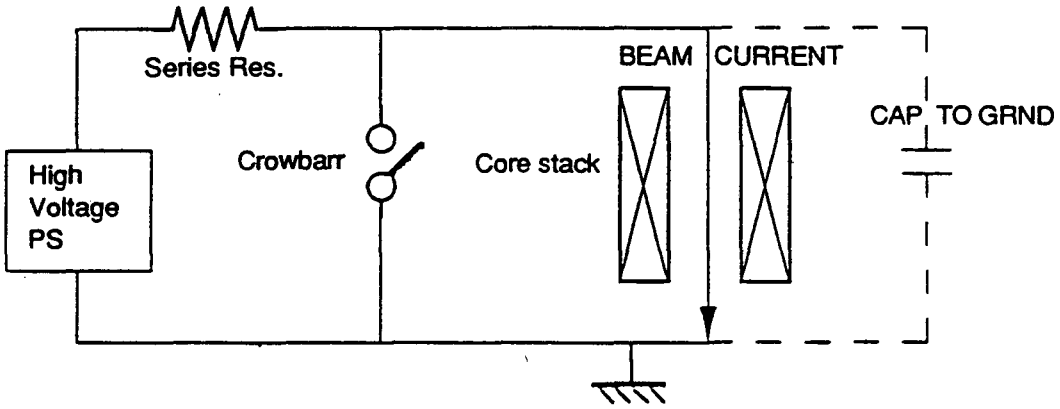

CORE STACK BEHAVES LIKE AN IMPEDANCE PREVENTING THE BEAM CURRENT TO INCREASE FAST.

1) AREA is determinend by: $V=\Delta B*A*1E-8/\Delta t$

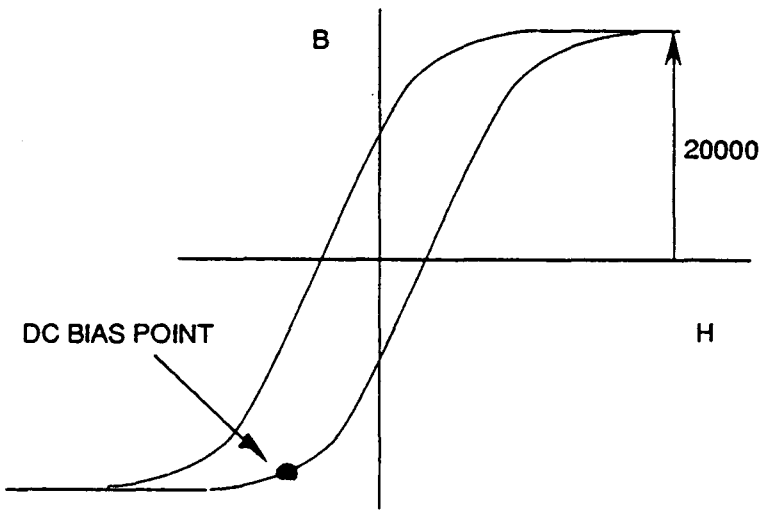

V=1.3MV
ΔB=40000 (for metglas 2605CO)
Δt=300ns

A=0.1m^2

2) INDUCTANCE given by: $L=\mu*H*\ln(D2/D1)*2*1E-7$

μ=1000
H=0.75 m
D1=3.25 m
D2=2.75 m

L=25 μH

Volume of core stack=π/4*(D2^2-D1^2) Volume= 1.76 m^3
From curves E(loss)= 300 J/m^3
therefore the stack absorbs 1.76*300= 540 Joules

3) RESISTANCE

E(loss)=V*I*Δt I=540/(1.3E6*300E-9) I= 1384 A

R=V/I R=938

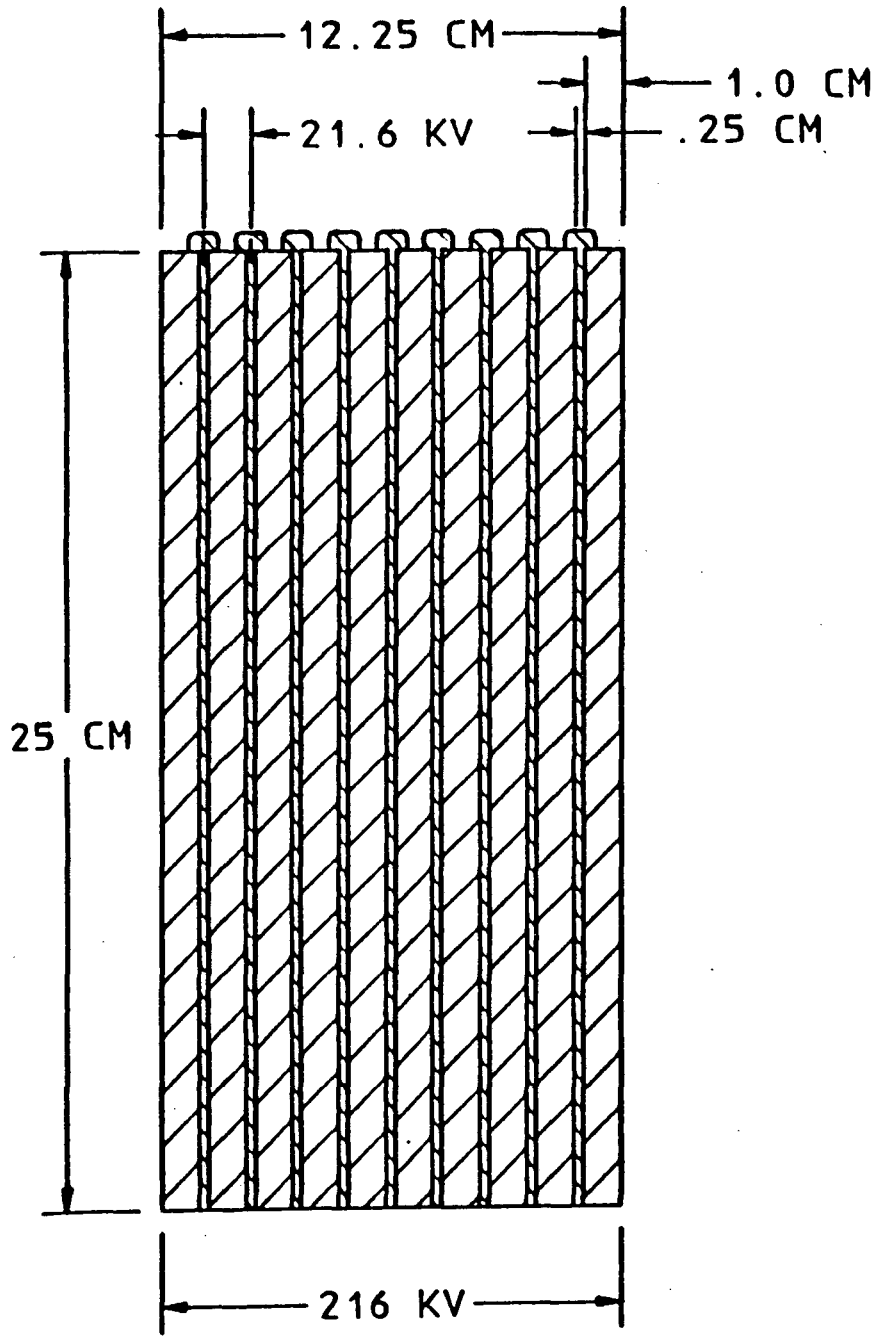

EACH OF THE SIX CORES CONSISTS OF TEN SUBSECTIONS ISOLATED FROM EACH OTHER TO HOLD OFF 21.6 kV PER SUBSECTION. THE METGLAS TAPE USED HAS A WIDTH OF 1 CM AND THICKNESS OF 0.003 CM. THE 7800 TURNS PER SUBSECTION RESULT IN 3 VOLTS BETWEEN LAMINATIONS AND ASSUMING A PACKING FRACTION OF 0.7, EACH CORE HAS AN AREA OF 175 CM^2 OR A TOTAL OF 0.1 M^2 AS REQUIRED

FIG. 21 CORE DETAIL

FIG. 22 ACCELERATOR SPARK DOWN

COMPUTED TRANSIENT RESPONSE

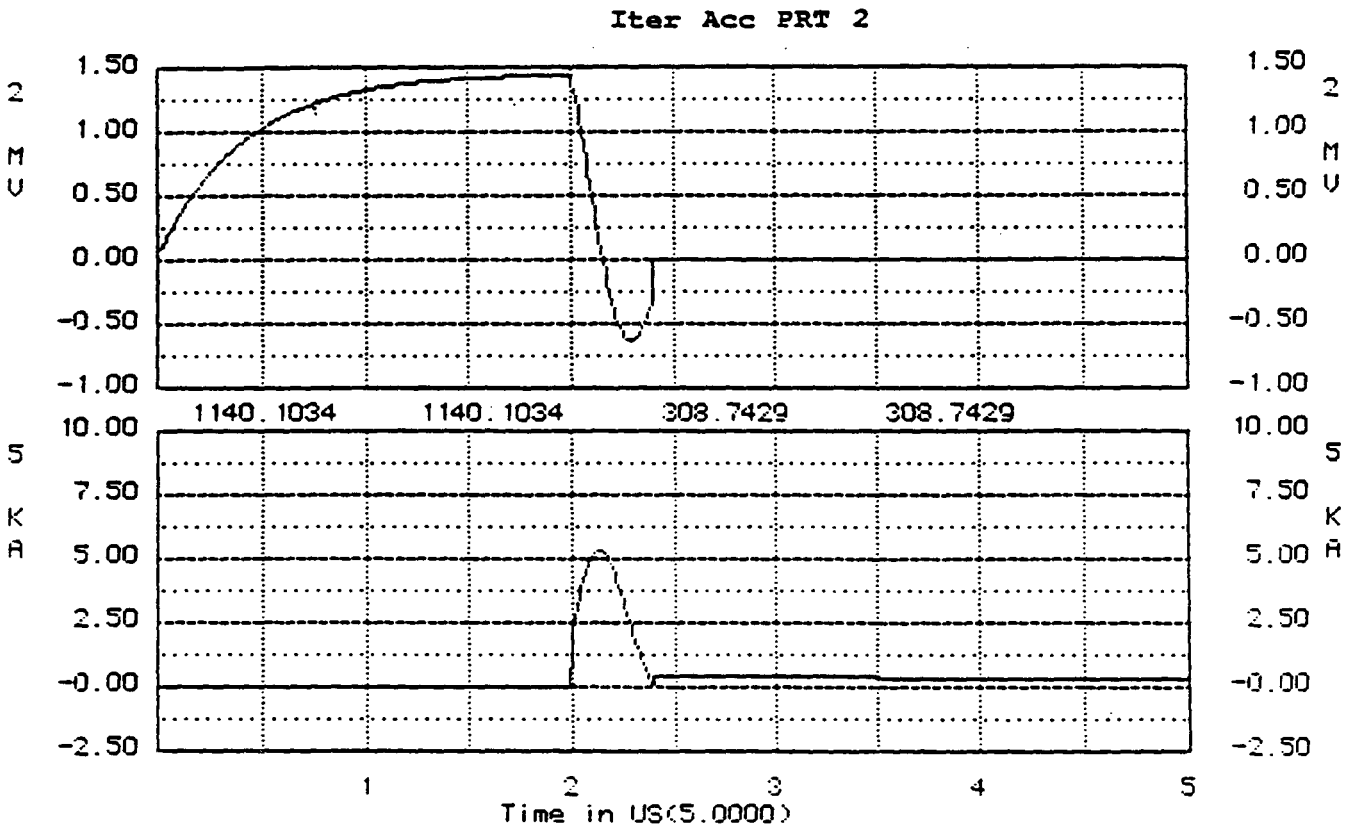

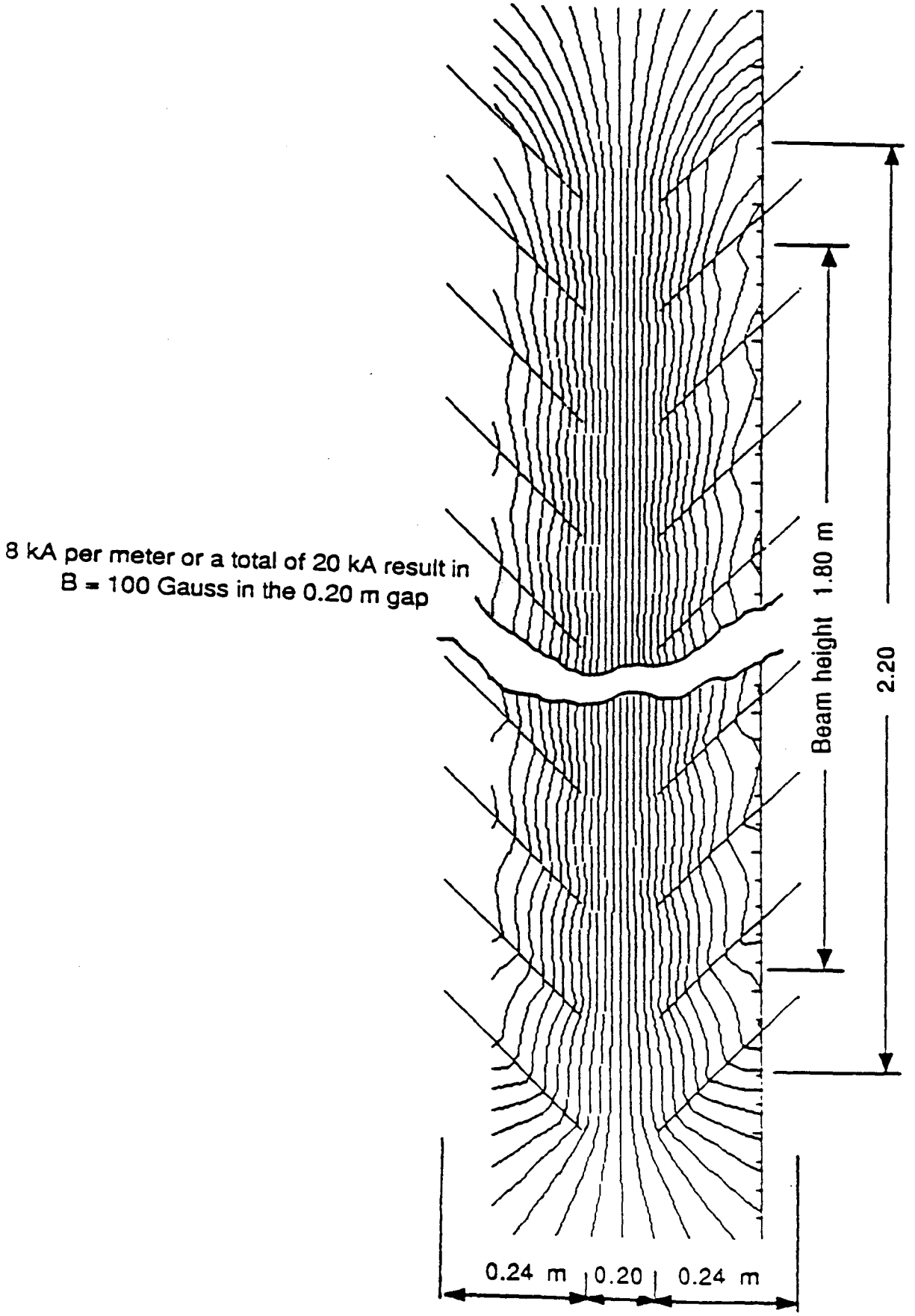

FIG. 23 ION DUMP MAGNETIC CALCULATIONS

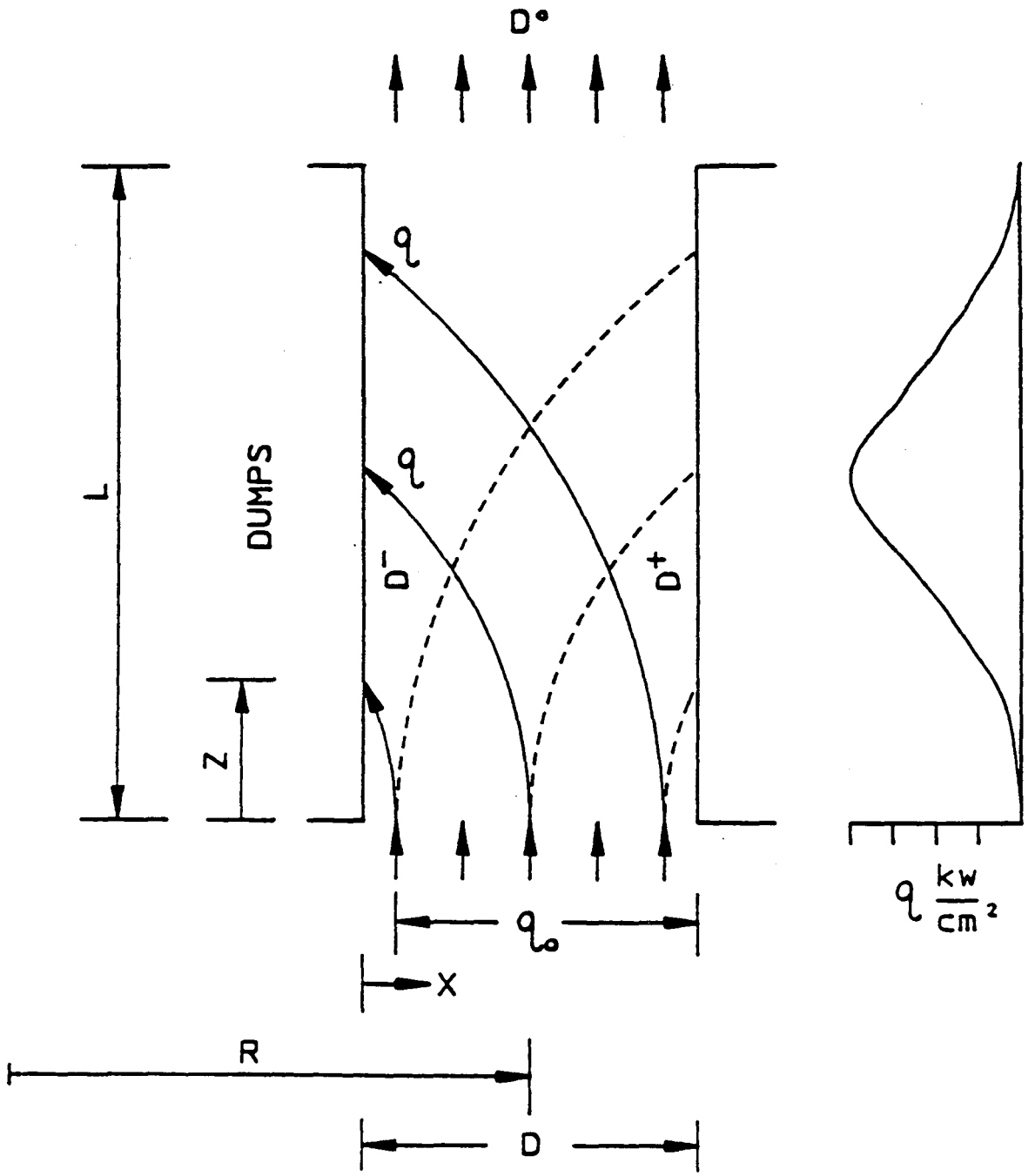

FIG. 24 ELECTROMAGNETIC DEFLECTOR AND BEAM DUMPS PLAN VIEW

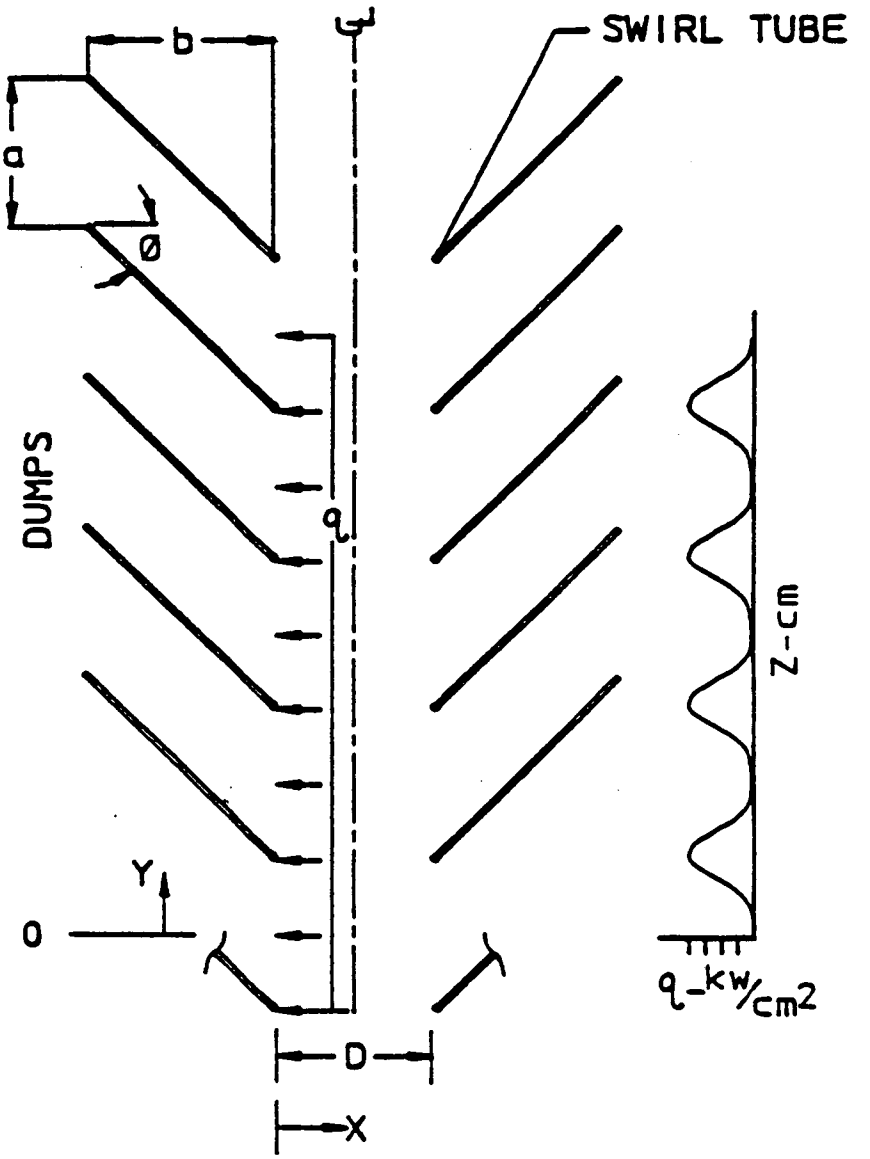

FIG. 25 ELECTROMAGNETIC DEFLECTOR AND BEAM DUMPS ELEVATION VIEW

FIG. 26 SPUTTER YIELD 1.3 MeV D+ 0N COPPER

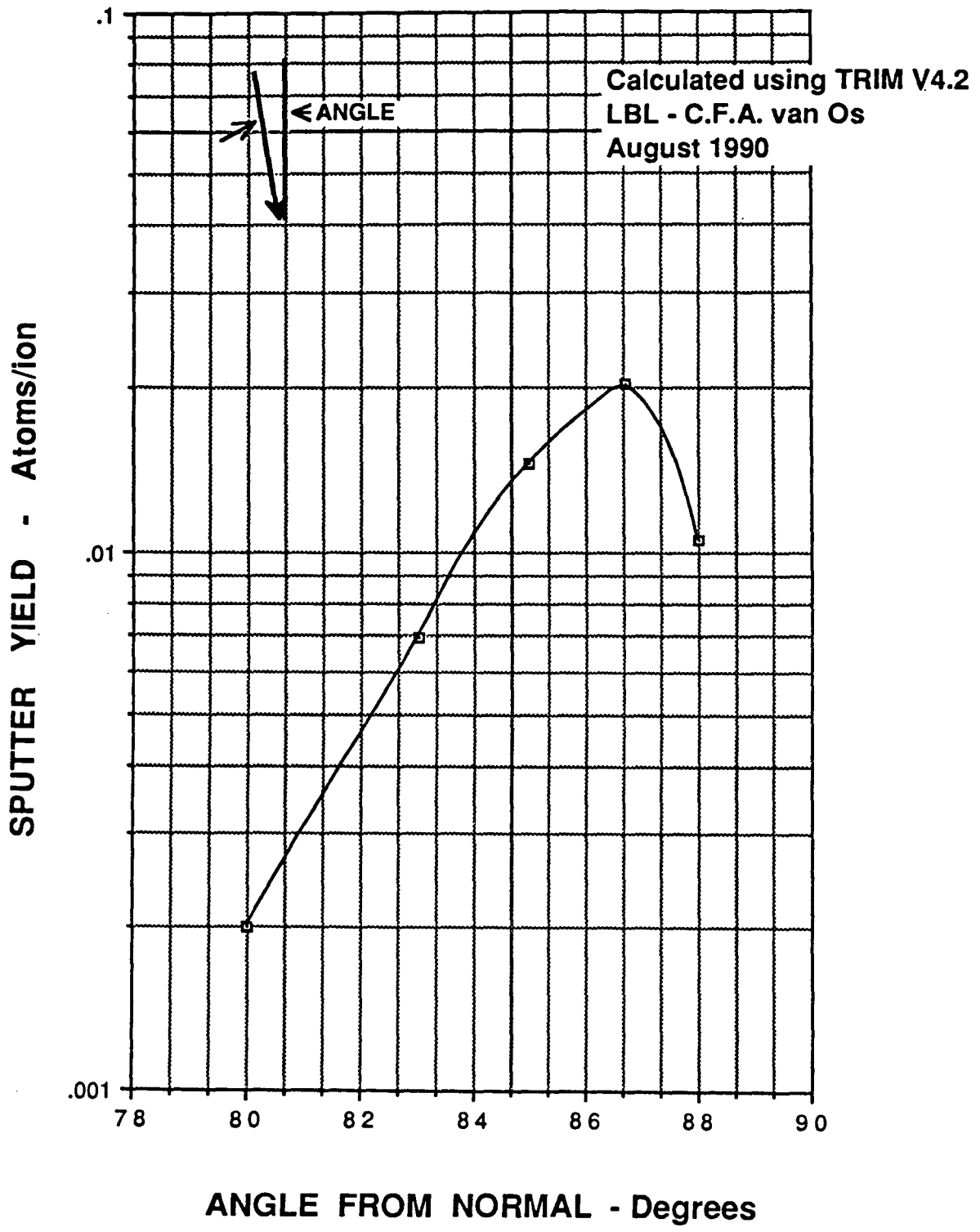

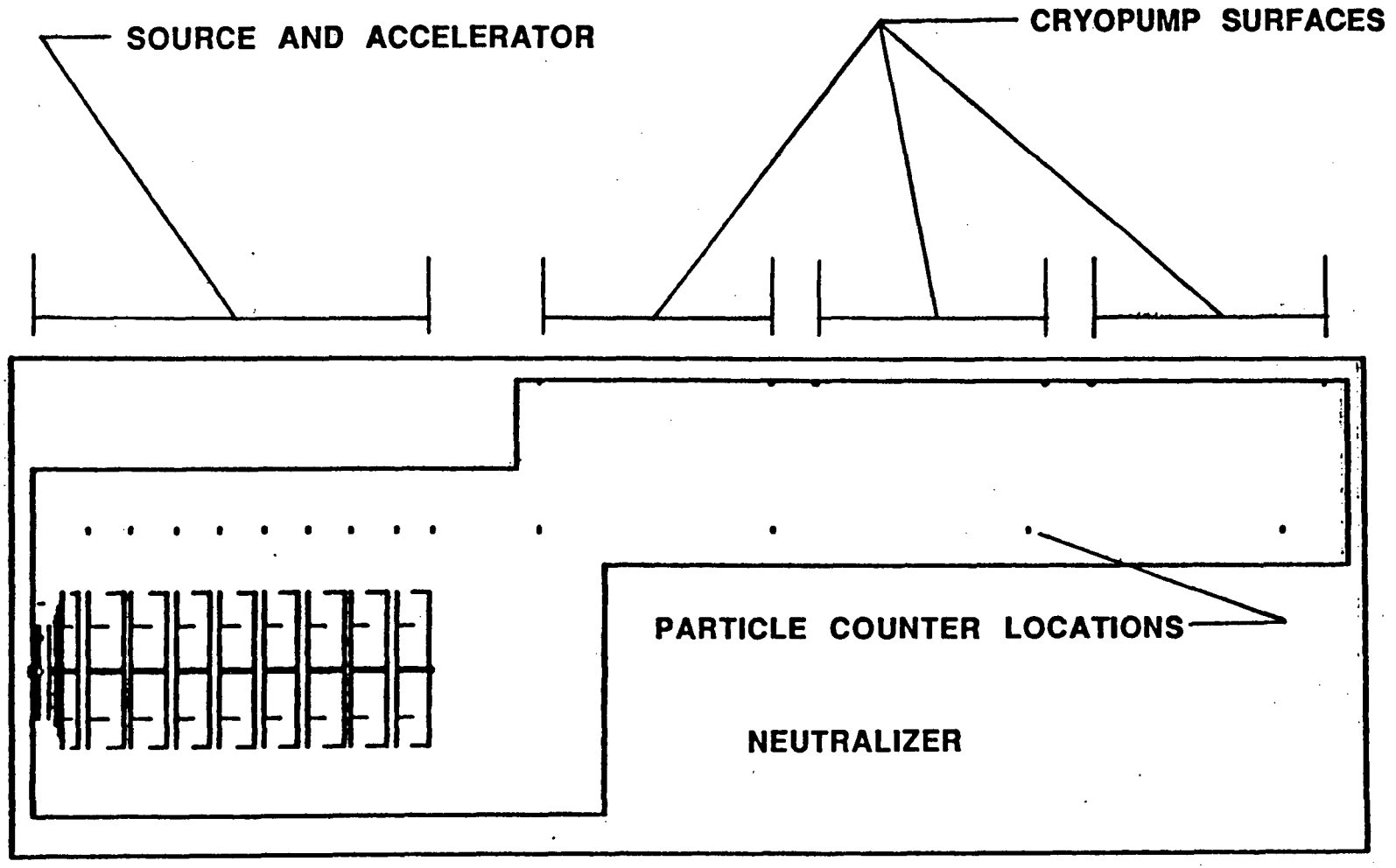

Fig. 27 2-D MONTE CARLO MODEL FOR ACCELERATOR AREA

FIG. 28 NORMALIZED PRESSURE DISTRIBUTION IN THE ACCELERATOR

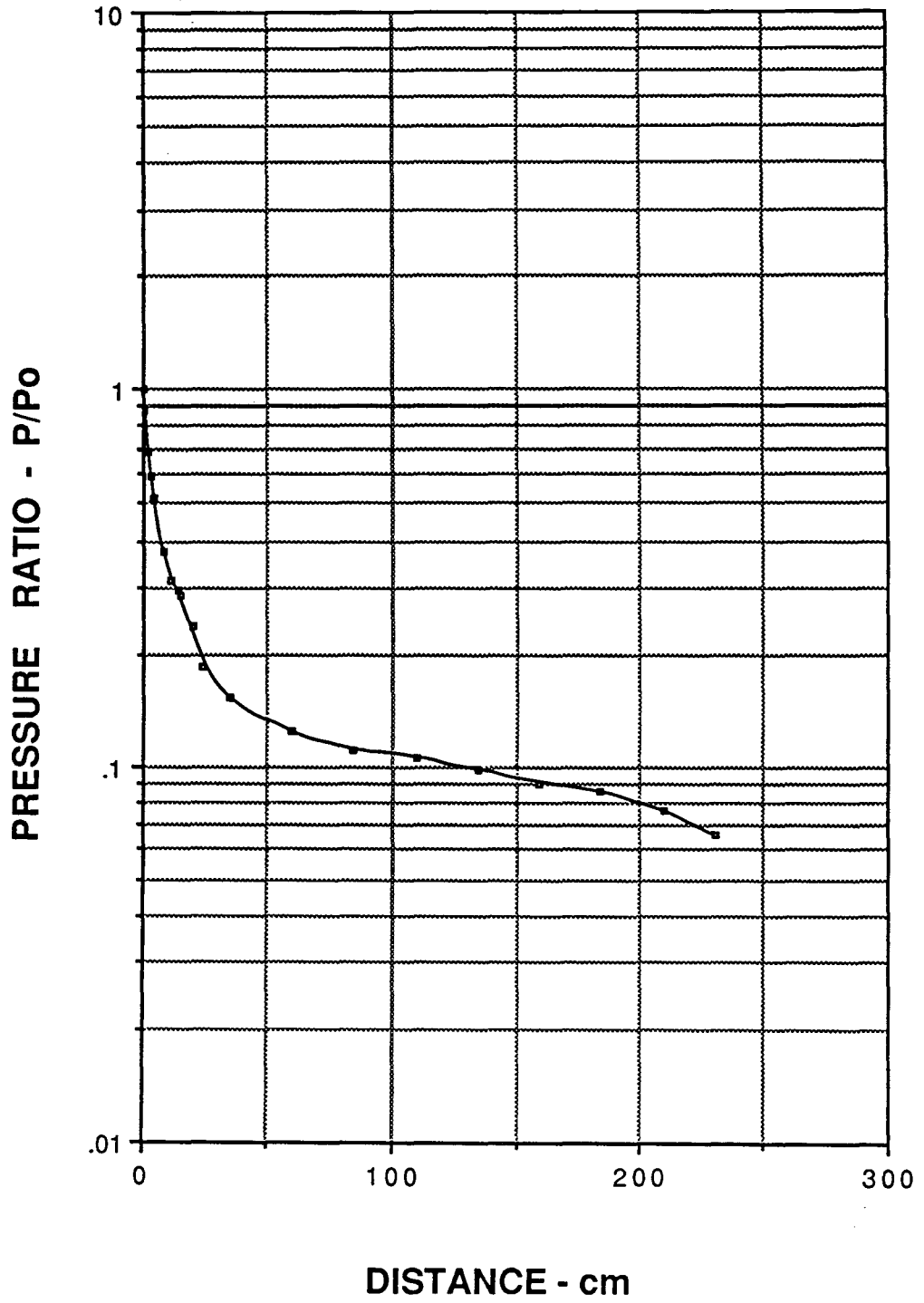

FIG. 29 BEAMLOSS IN ACCELERATOR
D- in D2, Psource = 1.5 mT
Tsource gas = 300 K

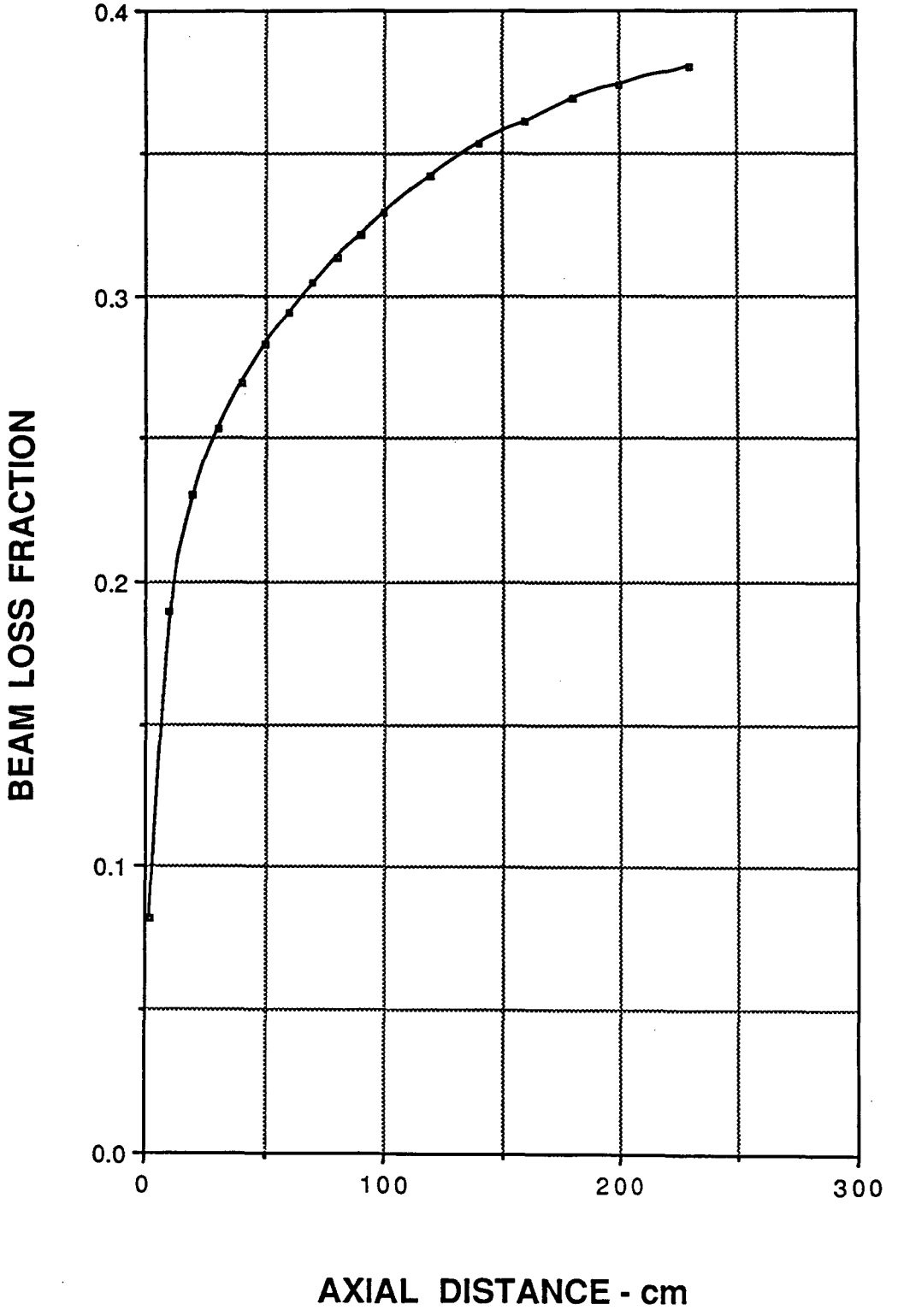

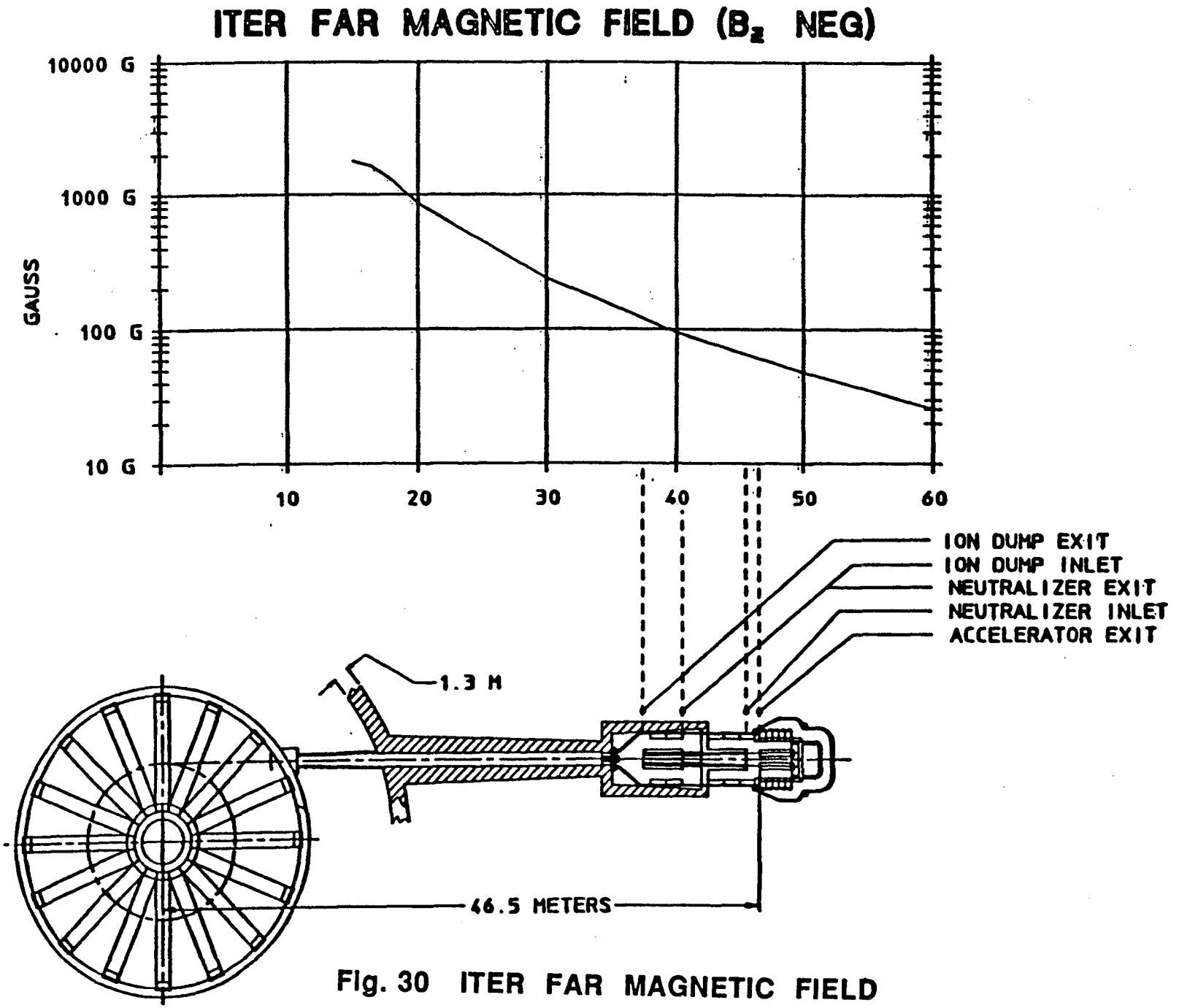

Fig. 30 ITER FAR MAGNETIC FIELD

LAWRENCE BERKELEY LABORATORY
UNIVERSITY OF CALIFORNIA
INFORMATION RESOURCES DEPARTMENT
BERKELEY, CALIFORNIA 94720