Submitted to Journal Nuclear Instruments
and Methods

LBL-2967
Preprint c. 2

PERFORMANCE OF A SILICON PROTON POLARIMETER BETWEEN 19 AND 32 MeV

J. Birchall, H. E. Conzett, W. Dahme, J. Arvieux,
F. N. Rad, R. Roy, and R. M. Larimer

July 1974

Prepared for the U. S. Atomic Energy Commission
under Contract W-7405-ENG-48

TWO-WEEK LOAN COPY

This is a Library Circulating Copy which may be borrowed for two weeks. For a personal retention copy, call Tech. Info. Division, Ext. 5545

LAWRENCE BERKELEY LABORATORY
UNIVERSITY OF CALIFORNIA
BERKELEY

LBL-2967
c. 2

DISCLAIMER

This document was prepared as an account of work sponsored by the United States Government. While this document is believed to contain correct information, neither the United States Government nor any agency thereof, nor the Regents of the University of California, nor any of their employees, makes any warranty, express or implied, or assumes any legal responsibility for the accuracy, completeness, or usefulness of any information, apparatus, product, or process disclosed, or represents that its use would not infringe privately owned rights. Reference herein to any specific commercial product, process, or service by its trade name, trademark, manufacturer, or otherwise, does not necessarily constitute or imply its endorsement, recommendation, or favoring by the United States Government or any agency thereof, or the Regents of the University of California. The views and opinions of authors expressed herein do not necessarily state or reflect those of the United States Government or any agency thereof or the Regents of the University of California.

PERFORMANCE OF A SILICON PROTON POLARIMETER BETWEEN 19 AND 32 MeV*

J. Birchall[†], H. E. Conzett, W. Dahme[‡], J. Arvieux[‡‡]
F. N. Rad, R. Roy, and R. M. Larimer

Lawrence Berkeley Laboratory
University of California
Berkeley, California 94720

July, 1974

The design is presented of a proton polarimeter which combines the advantages of high scattering efficiency and good energy resolution. The polarimeter, intended for proton energies above 17 MeV, is well-suited to the study of polarisations in low-yield reactions and has been used in the measurement of triple-scattering parameters. A typical figure of merit $A\sigma^{1/2}$ of $\sim 2.2 \times 10^{-3}$ and an energy resolution of approximately 100 keV FWHM at 26 MeV make the present type of polarimeter superior to others for experiments where good energy resolution is required.

---

*Work performed under the auspices of the U. S. Atomic Energy Commission.

[†]Present address: Physics Department, University of Basel, Switzerland.

[‡]Present address: Physics Department, University of Munich, West Germany.

[‡‡]Present address: I. S. N., University of Grenoble, France.

1. Introduction

In the past few years interest has grown in the measurement of the so-called triple-scattering parameters [1]. These experiments require the scattering of a polarised beam from a target and the measurement of the polarisation of the outgoing beam. The polarisation is determined by scattering the beam from a suitable polarisation analyser (usually carbon[2] or helium[3]) and by comparison of the scattering yields at equal angles to the left and the right from the analyser. Two nuclear scatterings are therefore involved (three if the initial polarised beam is produced via a reaction - thus the term triple-scattering parameter), the first at the primary target and the second at the polarisation analyser. Count rates are generally low and increases in scattering efficiency have usually been made at the expense of energy resolution.

Recent progress in calculations for the three-nucleon system[4] and the relatively good agreement of the results of these calculations with measured cross-sections and analysing powers[5] have spurred interest in experiments of the above type, which probe further our understanding of few nucleon systems. It is expected that precise determination of polarisation transfer[6] and depolarisation parameters for both nucleon-deuteron elastic scattering and breakup will provide a sensitive test of the nucleon-nucleon interactions used in the calculations and, possibly, throw light on the existence of a hypothetical three-body force among nucleons.

In the field of proton-nucleus elastic scattering it has been pointed out[7] that detailed information on the nucleon-nucleus spin-spin interaction can be expected from the study of angular distributions of the depolarisation parameter D[8]. In such experiments good energy resolution is required to separate elastically scattered protons from scattering from low lying states of the target nucleus.

A polarimeter has been designed for experiments of the above types, and for other experiments where a low yield of protons is expected. The polarimeter combines high scattering efficiency with good energy resolution. The design, featuring scattering from a silicon analyser at 27°, is similar to that of Frois et. al.[9] and is based on an idea due to Miller[10]. The polarimeter is suitable for proton energies above 17 MeV. For lower energies similar polarimeters have been built[11] which use scattering from silicon at backward angles where the analysing power is high and the cross-section low.

2. Design

The polarimeter, illustrated in fig. 1, comprises a polarisation analyser, labelled 'analyser detector' and three silicon semiconductor detectors labelled 'left', 'right' and 'zero-degree'. The analyser material is silicon in the form of a Si(Li) semiconductor transmission detector of 1-2 mm depletion depth. The zero-degree detector is centred on the polarimeter axis, while the left and right side detectors are positioned at ±27° to the axis, and each subtends a solid angle of 12 msr at the analyser. The zero-degree detector has the same angular width as the analyser as seen from the target, but much reduced angular height so as to reduce count rate and electronic dead time. It is used to measure the analysing power of the target from the ratio of count rates with the primary beam polarisation oriented up and down.

Fig. 2 is a diagram of the electronics used for one polarimeter. Whenever possible, runs are made with two silicon polarimeters, one at either side of the beam at equal scattering angles. The side detectors, E_L and E_R, are operated together with the analyser detector ΔE as two E-ΔE counter telescopes sharing the same ΔE detector. A 110 ns resolving time coincidence requirement, set

by the coincidence units (FC), between either side detector and the ΔE detector serves to substantially reduce background and determines whether a particular event was due to a particle scattered into the left or the right side detector. The corresponding energy pulses are gated in the linear gates (LG) by the fast coincidence outputs. Power-law particle identifiers[12] (PI) sum the E and ΔE pulses and may be used for particle identification (although this has not yet been necessary). The summed pulse $E+\Delta E$ from the PI's represents the total energy of the particle incident on the analyser detector (minus ~ 100 keV at 20 MeV due to imperfect detection of the energy of the silicon recoil in the analyser detector[13]). The polarimeter therefore has the advantage of good energy resolution even when the analyser is made thick and the side detector solid angles are made large in order to increase count rate. Typically, energy resolutions of the order of 100 keV FWHM at 20 MeV are obtainable when the polarimeter is operated at analyser count rates below about 5×10^4 sec.$^{-1}$. The PI total energy outputs are mixed and then stored in the appropriate regions of the memory of a pulse-height analyser, the identifier outputs of the PI's serving as routing pulses.

Fast coincidence timing is conveniently set up and continuously monitored by means of a time to amplitude converter (TAC). The SCA outputs of the side detectors are fanned-in through an OR unit to the 'start' channel of the TAC. The analyser SCA outputs are connected to the 'stop' channel via a second OR unit. The TAC output is gated by the fast coincidence between any of the E and ΔE detectors and is routed to the region of a pulse-height analyser corresponding to the E-ΔE pair. When two polarimeters are in use, all of the E and ΔE SCA signals are fanned into a single TAC.

Dead time corrections are determined by feeding pulser pulses at low rate to the inputs of the detector preamplifiers. The pulser counts fed into the preamps are scaled and compared with the number of pulser counts emerging from the fast coincidence units. Pulser counts are identified as such by making a slow coincidence (SC) between the fast coincidence outputs and the pulser trigger signal.

Typical energy spectra are shown in figs. 3-5. Fig. 3, for $^{9}Be(\vec{p},\vec{p})$ at E_p=25.3 MeV and Θ_{LAB}=45°, was obtained with a 1 mm thick analyser detector counting at ~10^5 counts per second. No pileup rejection or baseline restoration was used. The elastic peak at channel 320 corresponds to a proton energy of 22.6 MeV. The peak at channel 285 is due to the 2.43 MeV state of ^{9}Be, while the small peak near channel 295 is from elastic scattering from ^{9}Be followed by scattering from the 1.78 MeV level of ^{28}Si of the analyser detector. The cross-section for the 1.78 MeV state is approximately 4% of the elastic cross-section at 27° at this energy, but becomes comparable with the elastic cross-section at backward angles. The large number of counts below channel 200 is due to random E-ΔE coincidences. In later runs these background counts have been almost entirely eliminated by setting a window a few MeV wide around the peak in the ΔE pulse-height spectrum and thresholds of ~ 12 MeV on the side detector spectra. The analyser window is particularly easy to set when the scattering from the analyser is at forward angles, as the peak in the pulse-height spectrum is quite distinct. Scattering at backward angles would produce a continuum and a threshold-dependent detection efficiency. Fig. 4 is a spectrum of $^{12}C(\vec{p},\vec{p})$ at E_p=26 MeV and Θ_{LAB}=43.2° using a 1 mm analyser. The elastic peak at channel 355 corresponds to a proton energy of 23.6 MeV, the

peak at channel 285 to the 4.43 MeV state of ^{12}C. The 1.78 MeV ^{28}Si peak is again clearly visible and small. Fig. 5 shows a spectrum of $H(\vec{d},\vec{p})$ at E_d=46.3 MeV and Θ_{LAB}=35° with a 2 mm analyser[6]. The liquid nitrogen cooled gas target, with 0.001" Havar windows, was operated at a pressure of 12 atmospheres. The elastic peak is at an energy of 26.2 MeV, the kinematic contribution to the energy spread in this case being 600 keV FWHM. Deuterons were eliminated from the spectrum by means of energy thresholds on the side detectors and an energy window on the analyser detector. No particle identifier window was required.

Baseline restoration or pileup rejection have not yet been used. Their introduction would undoubtedly improve energy resolutions at high analyser detector count rates ($\sim 10^5$ sec^{-1}).

The polarimeter was designed with reference to recently published data on $^{28}Si(\vec{p},p)$ from 17 to 29 MeV[14]. Fig. 6 shows a contour plot, derived from these data, of $A\sigma^{1/2}$ where A is the proton - ^{28}Si analysing power and σ is the differential elastic cross-section. The figure of merit $A\sigma^{1/2}$, is inversely proportional to the statistical error expected in a polarisation measurement for a fixed integrated flux onto the analyser, and is therefore a useful measure of the performance of the polarimeter. The peak in the figure of merit, centred at E_p=23 MeV and a scattering angle of 30°, is quite flat and reaches 5.4 $(mb/sr)^{1/2}$. The figure of merit of the present polarimeter could be increased by 5-10% of its present value by using a mean scattering angle of 30° instead of 27°. For the present arrangement, with an analyser detector 2 mm thick and side detectors subtending an angle of ±3.5° at the analyser, the left-plus-right scattering efficiency Y is $\sim 0.8\times10^{-4}$ per proton incident on the analyser at 26 MeV. The integrated figure of merit $AY^{1/2}$ is $\sim 2.2\times10^{-3}$, with A measured as a fraction of 1.

3. Calibration of the Polarimeter

The effective analysing power of the polarimeter is determined in two ways: 1) by placing the polarimeter directly in the cyclotron beam of protons of known polarisation and by measuring the left-right asymmetry in the side detectors and 2) by measuring the asymmetry produced by a scattered beam of known polarisation. The first method has the advantage in principle of simplicity, but is difficult to use in practice. The difficulty is due to the fact that a beam current $<< 1$ n A on the analyser is needed to keep the count rate below $\sim 10^5$ sec^{-1}, above which pileup is important with our present system. With such low intensity it is not easy to monitor beam position, direction and polarisation, all of which are important for such an experiment. Routine use is now made of the second method, as it allows all beam on target, so that monitoring is relatively easy. The calibration procedure is to measure the asymmetry ε in the polarimeter produced by scattering a beam of polarisation p_o from a target. ε is given by:

$$\varepsilon = p_1 A_2 = A_2 \, (Dp_o + A_1) \, / \, (1 + p_o A_1)$$

where p_1 is the polarisation of the beam after scattering from the target, A_2 is the silicon polarimeter effective analysing power and A_1 and D are, respectively, the analysing power and depolarisation parameter of the target. For direct elastic scattering the D-parameter is a measure of the spin-spin interaction occurring between the scattered proton and the target nucleus. D then takes on its maximum possible value of 1.0 for elastic scattering from a spin zero nucleus, such as ^{4}He or ^{12}C. A_1 is determined from the spin up - spin down asymmetry in the zero-degree detector, or from the combined asymmetries in two

zero degree detectors when two polarimeters are in use, one at either side of the beam. Since ε, A_1 and p_o are measured and D is known for ^4He or ^{12}C, A_2 can be determined. Results of such measurements are shown in fig. 7. Systematic errors are greatly reduced by determining D from each side detector independently of the others, from the spin up - spin down asymmetry when the primary beam polarisation is inverted. Averaging D-parameter results obtained from both side detectors and from polarimeters at either side of the beam eliminates first-order systematic errors.

An alternative way of calibrating the polarimeter would be to scatter an unpolarised beam from a target of known analysing power. The polarisation - analysing power equality for elastic scattering[15)] requires that the polarisation of the protons scattered from the target is equal to the analysing power of the target at the same angle, thus the silicon analysing power would be easily determined. However, there are systematic errors which are not completely cancelled by this method.

4. Conclusions

The polarimeter has proven to be particularly useful in low yield experiments, such as in the determination of polarisation transfer and depolarisation parameters. The high efficiency coupled with inherently good energy resolution make it competitive with other polarimeters for proton energies between 17 and ~ 40 MeV. For experiments where energy resolution is important, involving the measurement of the polarisation of protons scattered from complex nuclei with closely spaced levels or the measurement of polarisation in breakup reactions, the present type of polarimeter is superior to others known to the authors.

References

1) L. Wolfenstein, Ann. Rev. Nucl. Sci. 6 (1956) 43.

2) C. Tschalär, C. J. Batty, A. I. Kilvington, Nucl. Instr. and Meth. 78 (1970) 141;
T. B. Clegg, A. C. L. Barnard, J. B. Swint, Nucl. Instr. and Meth. 40 (1966) 45.

3) J. F. Clare, Nucl. Instr. and Meth. 116 (1974) 525;
R. A. Hardekopf, D. D. Armstrong, P. W. Keaton, Nucl. Instr. and Meth. 114 (1974) 17, and references therein.

4) J. C. Aarons, I. H. Sloan, Nucl. Phys. A182 (1972) 369, A198 (1972) 321;
P. Doleschall, Phys. Lett. 40B (1972) 443, Nucl. Phys. A220 (1974) 491;
S. Pieper, Nucl. Phys. A193 (1972) 519, A193 (1972) 529, Phys. Rev. C8 (1973) 1702.

5) J. S. C. McKee, H. E. Conzett, R. M. Larimer, Ch. Leemann, Phys. Rev. Lett. 29 (1972) 1613;
F. N. Rad, J. Birchall, H. E. Conzett, S. Chintalapudi, R. Roy , to be published;
H. E. Conzett, G. Igo, W. J. Knox, Phys. Rev. Lett. 12 (1964) 222;
H. E. Conzett, H. S. Goldberg, E. Shield, R. J. Slobodrian, S. Yamabe, Phys. Lett. 11 (1964) 68;
T. B. Clegg, W. Haeberli, Nucl. Phys. A90 (1967) 593;
S. N. Bunker, J. M. Cameron, R. F. Carlson, J. R. Richardson, P. Tomas, W. T. H. van Oers, J. W. Verba, Nucl. Phys. A113 (1968) 461;
J. C. Faivre, D. Garreta, J. Jungerman, A. Papineau, J. Sura, A. Tarrats, Nucl. Phys. A124 (1969) 169;
R. E. White, W. Grüebler, V. König, R. Risler, A. Ruch, P. A. Schmelzbach, P. Marmier, Nucl. Phys. A180 (1972) 593;
A. Fiore, J. Arvieux, Nguyen Van Sen, G. Perrin, F. Merchez, J. C. Gondrand, C. Perrin, J. L. Durand, R. Darves-Blanc, Phys. Rev. C8 (1973) 2019.

6) F. N. Rad, J. Birchall, H. E. Conzett, R. Roy, paper submitted to the International Conference on Few Body Problems in Nuclear and Particle Physics, Université Laval, Québec, Canada, 1974, and to be published.

7) A. Hussein, H. S. Sherif, Phys. Rev. C8 (1973) 518.

8) J. Birchall, F. J. Arvieux, H. E. Conzett, W. Dahme, W. Haeberli, R. M. Larimer, Bull. Am. Phys. Soc. 18 (1973) 1394, and to be published; J. Birchall, H. E. Conzett, F. N. Rad, S. Chintalapudi, R. M. Larimer, Bull. Am. Phys. Soc. 19 (1974) 477, and to be published.

9) B. Frois, J. Birchall, R. Lamontagne, R. Roy, R. J. Slobodrian, Nucl. Instr. and Meth. 96 (1971) 431.

10) D. W. Miller, Proc. 2nd. Int. Symp. 'Polarisation Phenomena of Nucleons' (eds. P. Huber, H. Schopper; Birkhäuser, Basel, 1966).

11) J. P. Martin, R. J. A. Lévesque, Nucl. Instr. and Meth. 84 (1970) 211; J. P. Martin, J. L. Foster, H. R. Hiddleston, S. E. Darden, Nucl. Instr. and Meth. 113 (1973) 477.

12) F. S. Goulding, D. A. Landis, J. Cerny, R. H. Pehl, Nucl. Instr. and Meth. 31 (1964) 1.

13) S. B. Kaufman, E. P. Steinberg, B. D. Wilkins, J. Unik, A. J. Gorski, Nucl. Instr. and Meth. 115 (1974) 47.

14) C. R. Lamontagne, B. Frois, R. J. Slobodrian, H. E. Conzett, Ch. Leemann, R. de Swiniarski, Phys. Lett. 45B (1973) 465.

15) G. R. Satchler, Nucl. Phys. 8 (1958) 65.

Figure Captions

Fig. 1. Schematic diagram of the polarimeter, C_A, C_L, C_R, C_O are collimators.

Fig. 2. Electronic diagram for one polarimeter. The symbols are: S.C.A. - single channel analyser; F.C. - fast coincidence; S.C.- slow coincidence; L.G. - linear gate; P.I. - particle identifier; G.G. - gate generator; T.A.C. - time to amplitude converter; P.H.A. - pulse height analyser.

Fig. 3. Spectrum of $^{9}Be(\vec{p},\vec{p})$ at E_p = 25.3 MeV, Θ_{LAB} = 45° with a 53.4 mg/cm^2 target.

Fig. 4. Spectrum of $^{12}C(\vec{p},\vec{p})$ at E_p = 26 MeV, Θ_{LAB} = 37.4°, with a target 54.7 mg/cm^2 thick.

Fig. 5. Spectrum of $H(\vec{d},\vec{p})$ at E_d = 46.3 MeV, Θ_{LAB} = 35°.

Fig. 6. Contour plot of the $\vec{p}$ - ^{28}Si figure of merit $A\sigma^{1/2}$ versus laboratory scattering angle and proton energy. The units of $A\sigma^{1/2}$ are $(mb/sr)^{1/2}$, with A measured as a fraction of 1.0.

Fig. 7. Measured values of the polarimeter effective analysing power versus proton energy for Θ = 27°. A 1 mm analyser detector was used, except for the points above 24 MeV where the analyser was 2 mm thick. The dashed line is to guide the eye.

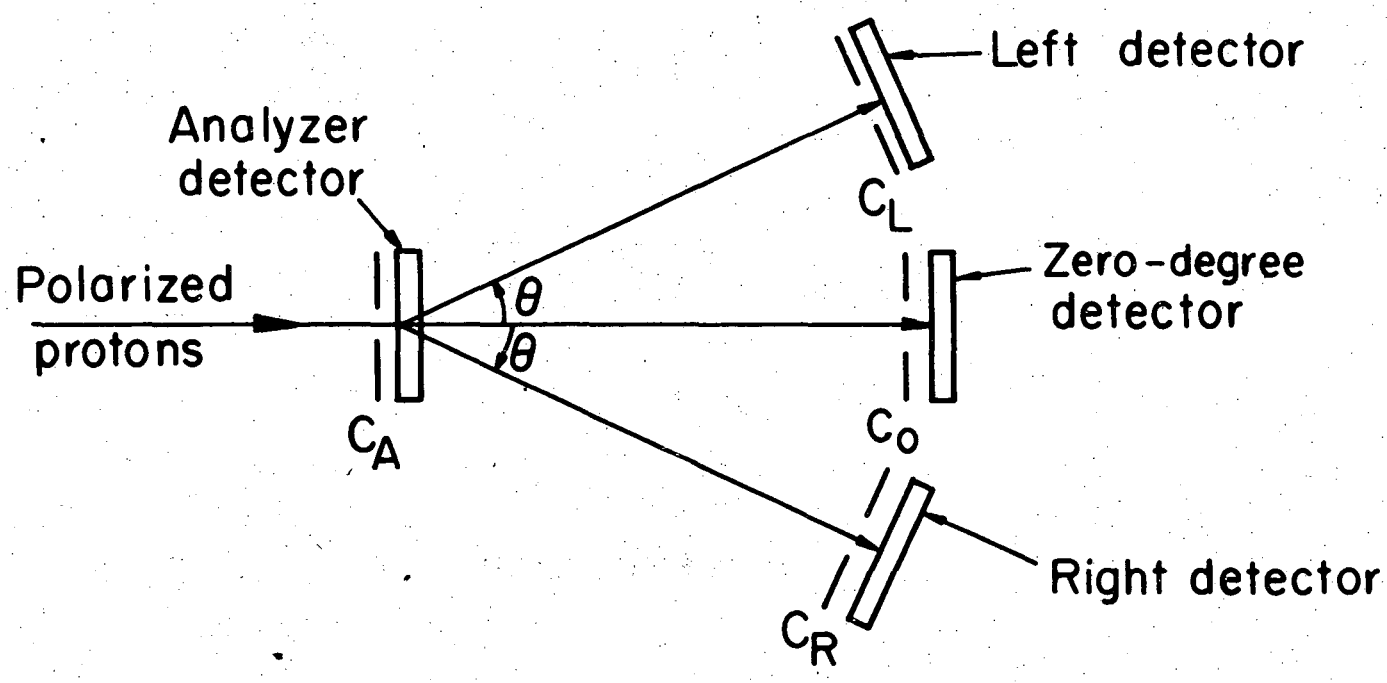

XBL733-2368A

Fig. 1

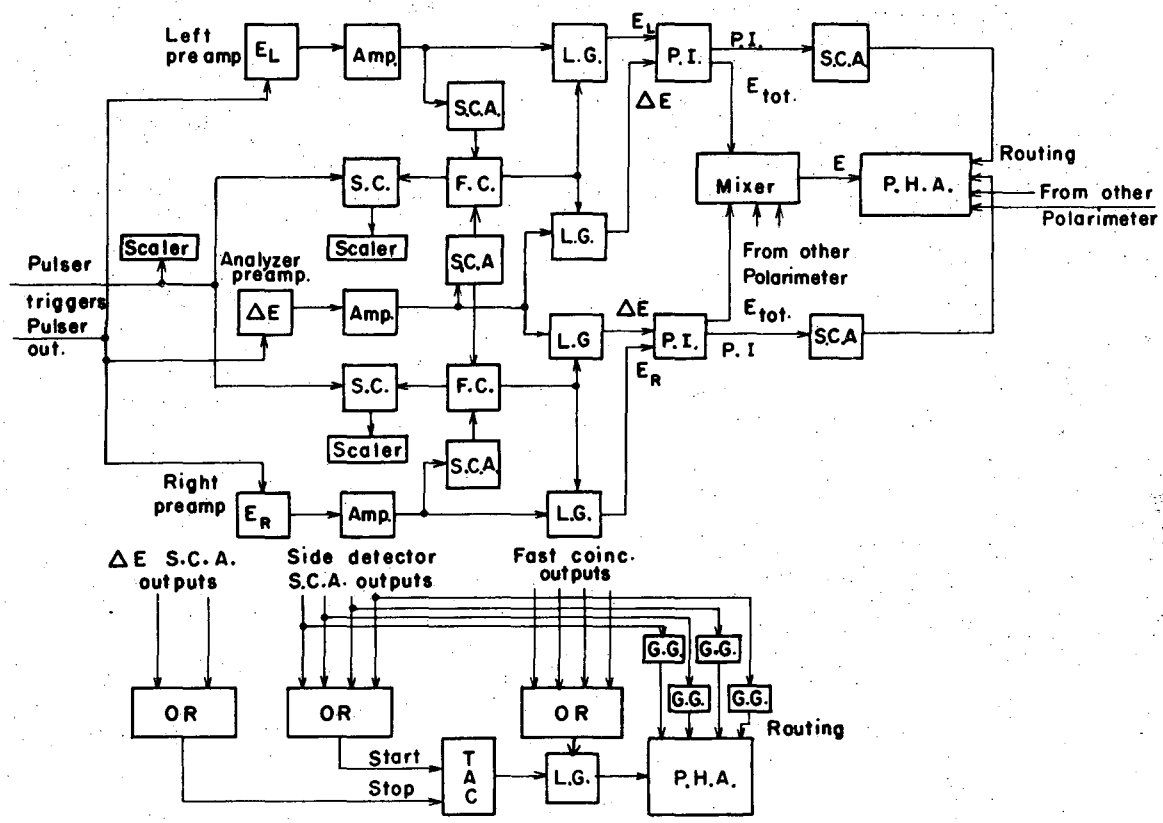
Left pre amp
E_L
Amp.
S.C.A.
L.G.
E_L
P.I.
P.I.
S.C.A.
$E_{tot.}$
ΔE
Routing
S.C.
F.C.
Mixer
E
P.H.A.
From other Polarimeter
Scaler
Scaler
L.G.
Pulser triggers Pulser out.
Analyzer preamp.
S.C.A
From other Polarimeter
ΔE
Amp.
ΔE
$E_{tot.}$
L.G
P.I.
P.I
S.C.A
E_R
S.C.
F.C.
Scaler
S.C.A.
Right preamp
E_R
Amp.
L.G.
ΔE S.C.A. outputs
Side detector S.C.A. outputs
Fast coinc. outputs
G.G.
G.G.
G.G.
G.G.
OR
OR
OR
Routing
Start
Stop
T A C
L.G.
P.H.A.
XBL747-3750

Fig. 2

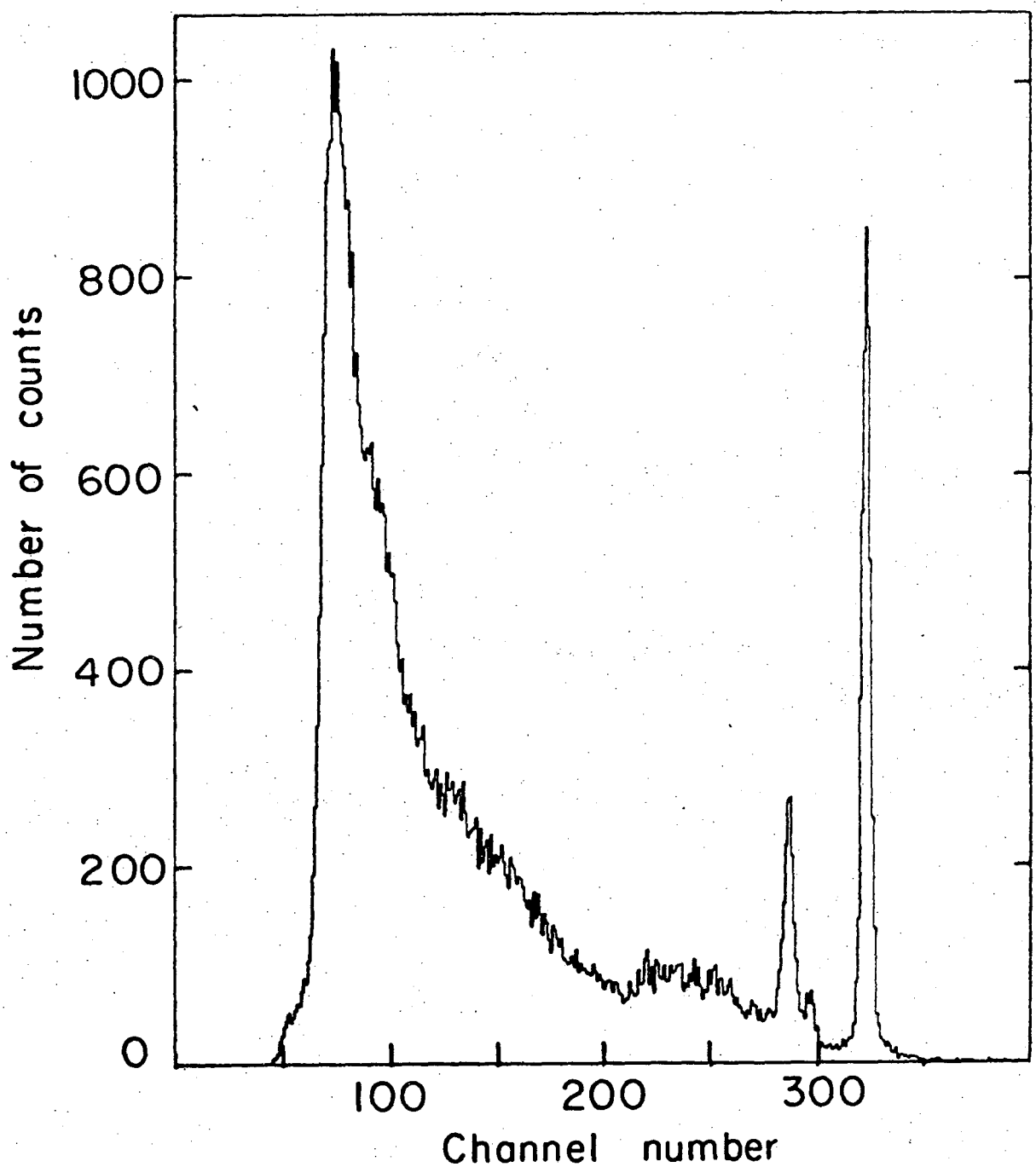

XBL746-3549

Fig. 3

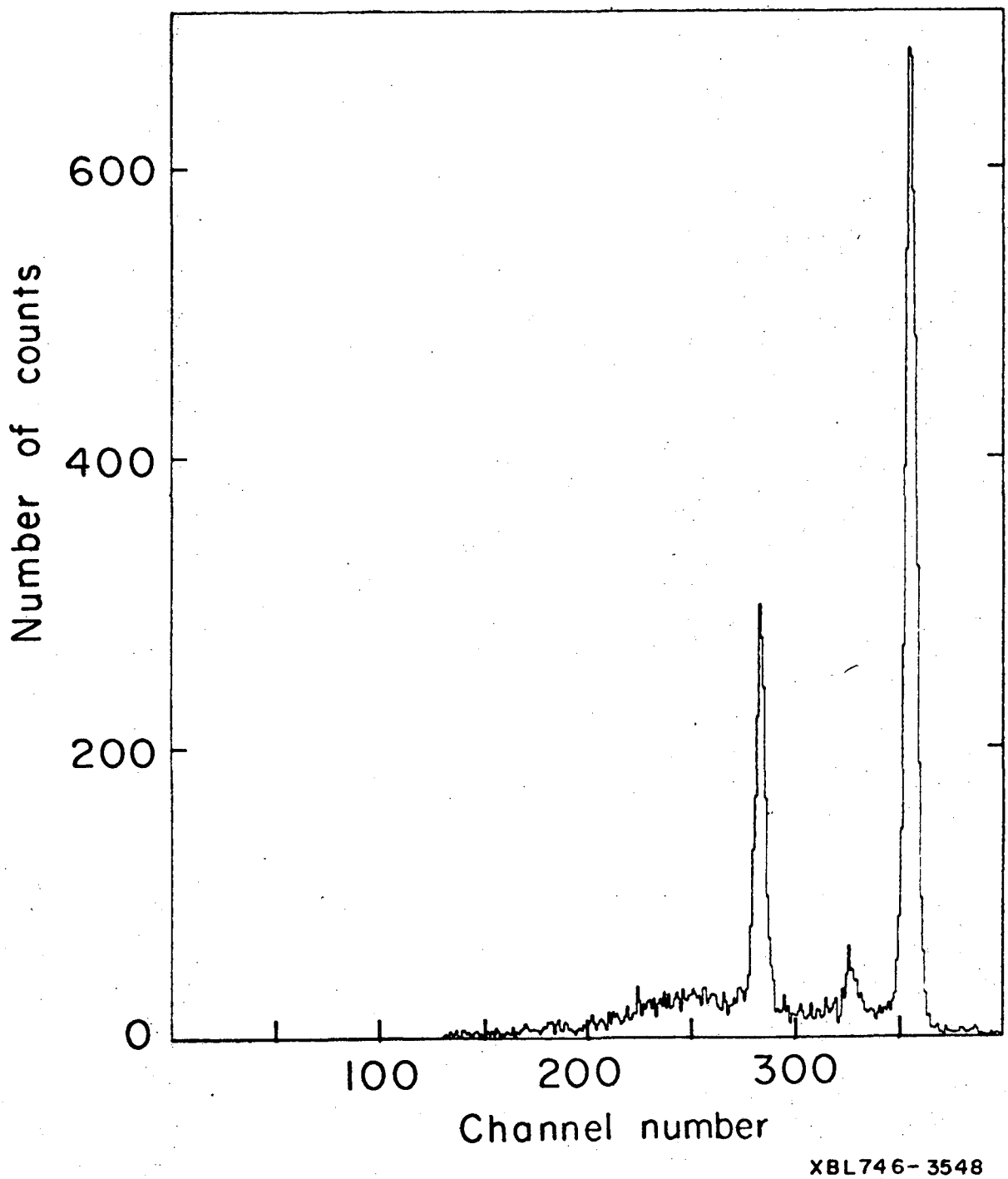
600
400
200
0
Number of counts
100
200
300
Channel number
XBL746-3548

Fig. 4

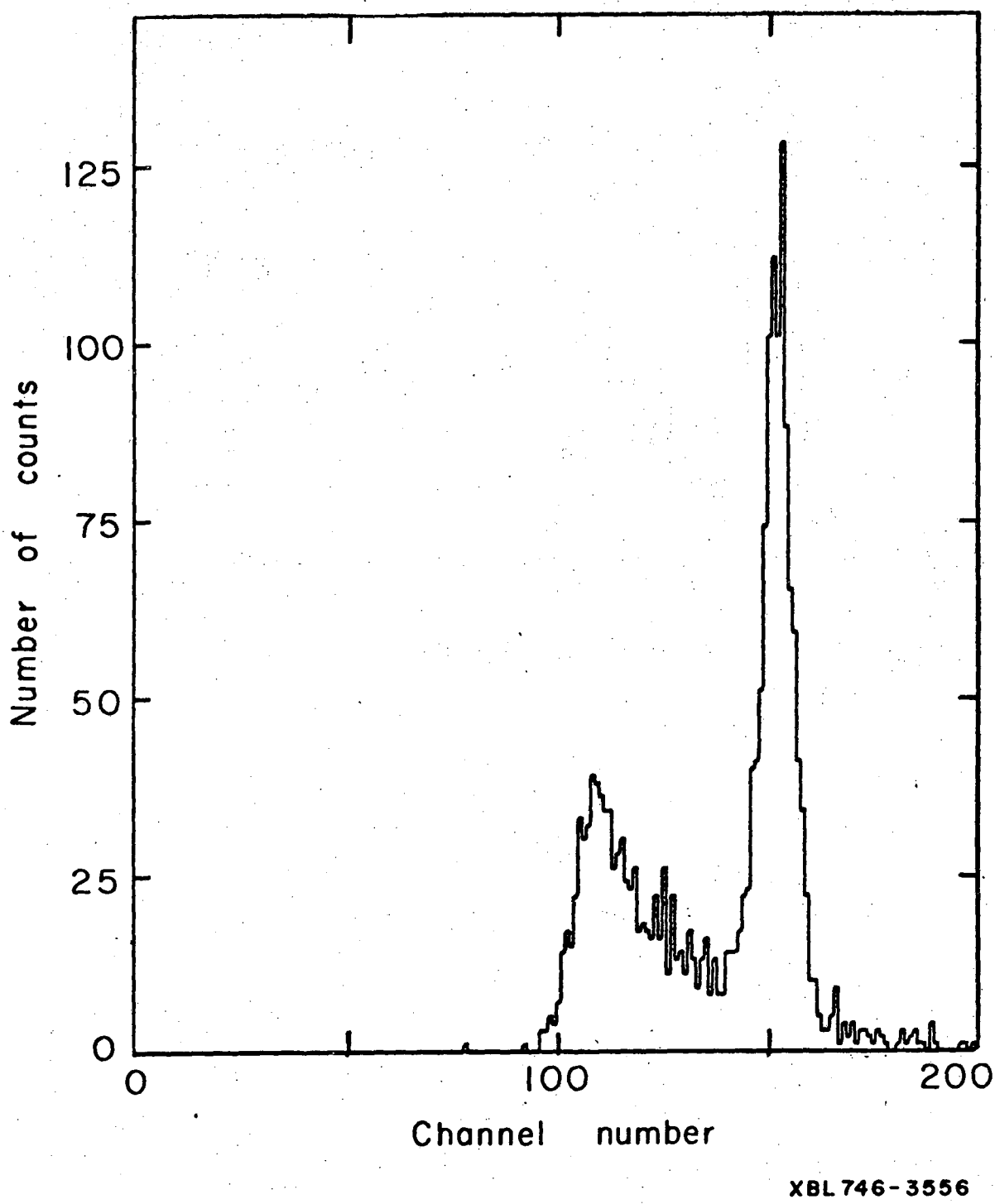
125
100
75
50
25
0
Number of counts
0
100
200
Channel number
XBL 746-3556

Fig. 5

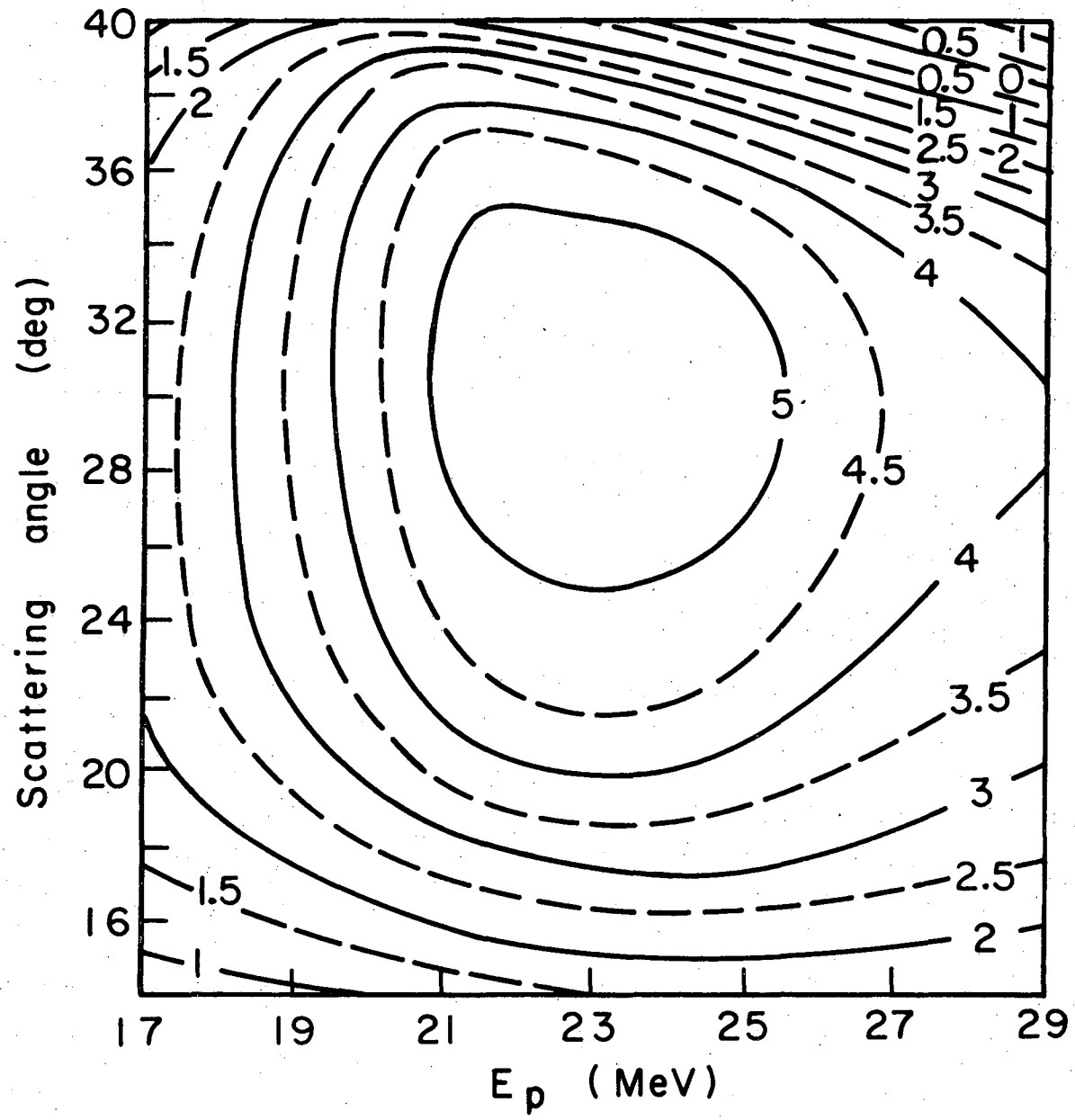

XBL747-3632

Fig. 6

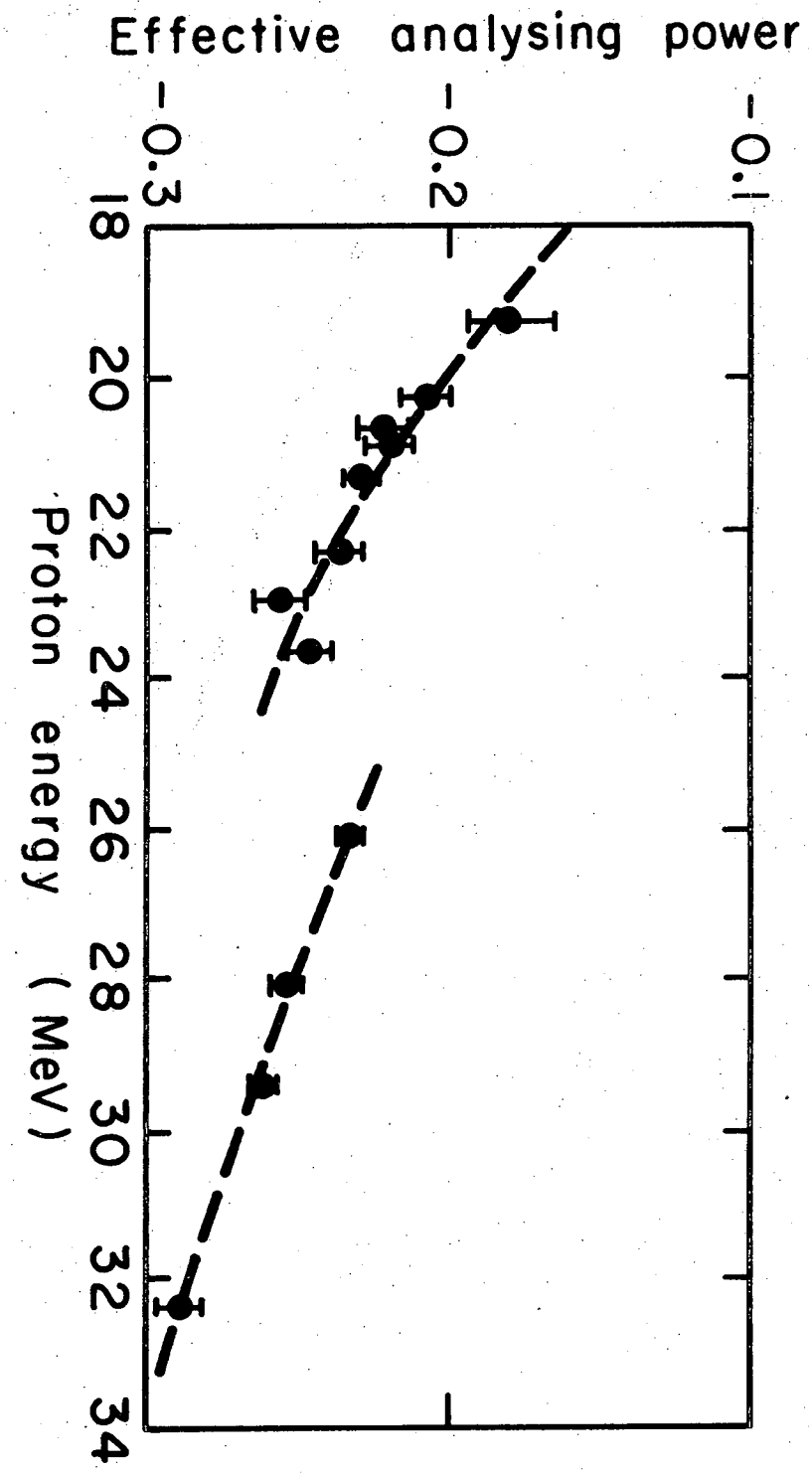

XBL748-3845

Fig. 7

LEGAL NOTICE

This report was prepared as an account of work sponsored by the United States Government. Neither the United States nor the United States Atomic Energy Commission, nor any of their employees, nor any of their contractors, subcontractors, or their employees, makes any warranty, express or implied, or assumes any legal liability or responsibility for the accuracy, completeness or usefulness of any information, apparatus, product or process disclosed, or represents that its use would not infringe privately owned rights.

TECHNICAL INFORMATION DIVISION
LAWRENCE BERKELEY LABORATORY
UNIVERSITY OF CALIFORNIA
BERKELEY, CALIFORNIA 94720