Presented at the IXth International
Conference on High Energy Accelerators,
SLAC, Stanford, California, May 2-7, 1974

LBL-3054
c.2

RAPPORTEUR TALK ON ELECTRON RING ACCELERATOR

Glen R. Lambertson

May 1974

Prepared for the U. S. Atomic Energy Commission
under Contract W-7405-ENG-48

TWO-WEEK LOAN COPY

This is a Library Circulating Copy which may be borrowed for two weeks. For a personal retention copy, call Tech. Info. Division, Ext. 5545

LAWRENCE BERKELEY LABORATORY
UNIVERSITY OF CALIFORNIA
BERKELEY

LBL-3054
c.2

DISCLAIMER

This document was prepared as an account of work sponsored by the United States Government. While this document is believed to contain correct information, neither the United States Government nor any agency thereof, nor the Regents of the University of California, nor any of their employees, makes any warranty, express or implied, or assumes any legal responsibility for the accuracy, completeness, or usefulness of any information, apparatus, product, or process disclosed, or represents that its use would not infringe privately owned rights. Reference herein to any specific commercial product, process, or service by its trade name, trademark, manufacturer, or otherwise, does not necessarily constitute or imply its endorsement, recommendation, or favoring by the United States Government or any agency thereof, or the Regents of the University of California. The views and opinions of authors expressed herein do not necessarily state or reflect those of the United States Government or any agency thereof or the Regents of the University of California.

RAPPORTEUR TALK ON ELECTRON RING ACCELERATION

Glen R. Lambertson

Lawrence Berkeley Laboratory
University of California
Berkeley, California

The work on electron rings is characterized by the conflict between (1) the desire to maximize and utilize the collective fields of the ring and (2) the necessity of suppressing instabilities propagated through those same collective fields. The search for this balance has resulted in some analyses of the limitations one may expect on ring parameters. I want to give as an example a particularly simple illustration of this that was presented by Jackson Laslett.[1] This concerns the maximum rate of acceleration for ions in an electron ring. Acceleration is limited by the maximum electric holding field expressible as

$$\mathcal{E} = \frac{\mu_0 c I}{2\pi\beta(\sigma_a+\sigma_b)}$$

for a ring having I amperes of electrons of energy E and velocity βc distributed over an elliptical ring cross section with standard deviations σ_a and σ_b. The ring is considered to be circulating in a conducting cylinder the radius of which exceeds by $4\sigma_a$ the ring major radius R.

For longitudinal stability, one requires

$$I \frac{|Z_m|}{m} \leqslant \frac{E}{e} \beta^2 \left(\frac{\Delta p}{p}\right)$$

where the momentum spread $\frac{\Delta p}{p}$ is limited by the radial deviation σ_a according to

$$\frac{\Delta p}{p} \leq 2.36 \frac{\sigma_a}{R} ;$$

the energy is related to the magnetic field B by

$$\frac{E}{e} = \frac{cBR}{\beta}$$

and the longitudinal impedance Z_m at mode m is given approximately by[2]

$$\frac{|Z_m|}{m} \approx 300 \frac{4\sigma_a}{R+4\sigma_a} \approx 1200 \frac{\sigma_a}{R} \text{ ohms.}$$

To maximize the holding field $\mathcal{E}$, assume that $\sigma_b \ll \sigma_a$. Combine the equations to obtain the following expression for $\mathcal{E}$ where $\mathcal{E}/2$ represents the useful accelerating field, a factor of two less to avoid loss of most of the accelerating ions:

$$\mathcal{E}/2 < 41.7 \times 10^6 \text{ B}$$

Let B = 2 Tesla to obtain

$$\mathcal{E}/2 < 83 \text{ MV/m.}$$

This should illustrate the close relationship between the useful and the disruptive aspects of the collective fields.

The conducting walls we need to stabilize the ring have been shown by a number of workers to exert a retarding effect on the moving ring. From a recent evaluation of this by Merkel[3] I show in Fig. 1 a diagram of the functional behavior of the retarding field on a ring in a conducting cylinder. If the walls are thin with resistivity of a few ohms/□ this can be a prohibitively large drag force. The walls must be made with high conductivity to reduce this problem.

Walls of intermediate resistivity were also shown by the LBL group to introduce transverse instabilities.[1,4] Laslett showed that even with nominally adequate Landau damping, a transient growth of amplitude may occur for portions of the injected beam before the damping can suppress it. In this case, walls of higher conductivity were a convenient cure.

Oscillations between the ions and the electrons can also arise and we shall hear of such observations in paper 4-2 today.

The question of what degree of acceleration can be imparted to the loaded ring before ions are lost from the potential well has been analyzed by Hoffman in paper 4-8 of the Proceedings. He maintains self-consistent and realistic distributions of electrons and of ions under various accelerating conditions. He evaluates the advantage of a squirrel cage of axial conductors by showing that a ring primarily focussed by images in such a cage can carry all its ion load to an acceleration of 40% of the maximum e-field and a few survive up to 80%. In contrast, the ring relying upon ion-focussing alone has lost its payload in the region of 25% of maximum electric field.

An approach toward understanding collective longitudinal motion including the non-linear coupling between harmonic modes that is implied by the Vlasov equation has been proposed by Pellegrini and Sessler.[5] In order to give tractable equations, they found an approximation concerning mean square momentum widths was necessary. The multi-mode, coupled behavior predicted has been a useful guide in the LBL studies of longitudinal instabilities. No change in stability criteria is indicated but the consequences of instability under given conditions can be pursued computationally.

I now wish to review briefly the electron ring programs that are in progress, with some notes from papers not to be heard today.

At Dubna in the Soviet Union there is a broad program on electron ring development. The compressor in which the acceleration of α-particles was reported at our last conference has been modified with the object of injecting rings into electric accelerating structures. In a paper submitted for this conference the Dubna group reports that a series of accelerating cavities lined with NbTi for frequency 1.3 GHz is being developed. A second electron ring system intended for the acceleration of heavy ions is being assembled. As injector, they have built a novel high-current electron linac, named Silund. Four of an eventual 5 sections of this induction linac have been operating at 600-700 amperes. The cold cathode in the first section is at 10^{-2} torr pressure with ~ 10^{-5} torr

pressure downstream. The complete injector will produce pulses of 3.0 MeV electrons at 10 Hz. The compressor configuration is shown in Fig. 2. The vacuum chamber walls of 0.5 mm stainless steel closely confine the ring to provide control of instabilities. Figure 3 shows this chamber. It is built for high vacuum; on test it has reached 5×10^{-9} torr. The compressor is intended to form rings of 1-to-5 $\times 10^{13}$ electrons.

Nearby, at ITEP in Moscow, and electron ring facility is being set up. Operation of a 1.5 MeV injector and the compressor will start by mid-1974. A 5 MeV injector will be ready next year.

The program at the Max Planck Institute near Garching, Germany in 1972 completed their first experiment on compressing rings. Improvements in their injector, since the 1971 Conference, helped them obtain an intensity of 5×10^{12} electrons in their compressed ring. Evidences of damages from betatron resonances stimulated their construction of a new compressor having a very short compression time of about 100 nsec. In another apparatus, they have studied intensity effects upon injection into a chamber. Papers 4-2 and 4-3 concern these experiments.

At Karlsruhe, Germany the IEKP has had a group working on the formation of intense rings. I am told they will not continue an electron ring program. Their work on achieving energy spread in their injector and on stacking a ring is given in a report 4-9 in the Proceedings.

The electron ring program at LBL will soon be discontinued. The interest there in electron rings has moved away from the acceleration of protons toward heavy ion work and it will no longer be supported by high-energy physics funds.

For some time, the LBL work was concerned with the suppression of instabilities near injection and in the early stage of compression; paper 4-4 to be presented today will report on longitudinal instability studies from that work. Last fall a compressor capable of full compression was assembled and paper 4-6 of the proceedings will describe that. Rings in this device have just been compressed to 4-cm radius where synchrotron light becomes a convenient diagnostic tool. Resonant betatron disturbances appear and have been seen to widen the ring axially. First and second harmonic field correction coils have been adjusted to reduce the ring width but there is still loss of electrons during compression from, at this time, uncertain causes.

The electron ring in the previous compressor at Berkeley was used in an experiment to see if x-rays from ions formed and trapped in the ring could be detected above background. Xenon was admitted to the compressor and the K and L x-rays of Xenon were clearly identified and measured.

This result stimulated the consideration of the electron ring as a device for studying the atomic spectra of highly stripped ions. For this use, one wishes a dense electron ring current, very high vacuum, and a long lifetime of the order of one second. In this case, considerable energy is radiated as synchrotron light but the loss can be utilized to increase the electron density. Paper 4-7 submitted for the proceedings describes how this can be done by the proper selection of field index, n. A diagram (Fig. 4) from this report shows how the compressed ring first radiates and becomes more dense; at that point it is near the longitudinal instability limit and it is necessary to reduce the magnetic field thereafter to allow some growth in momentum spread. In such a ring the progressive ionization of Argon would appear as in Fig. 5.[6]

The electron ring group at the University of Maryland has started experiments with their novel ring-forming system. Paper 4-5 to be presented will describe that work. They plan to start experiments on acceleration this summer.

Now, let us hear these reports.

[After the oral presentations, the following concluding comment was delivered.]

We see from these reports that those working with electron rings can find their activities both tantalizing and frustrating.

It is my reaction that experimental effort that may be characterized as a rush toward a workable accelerator has not been the most productive approach. In a complex field, complexities arise and we have had to fall back to firmer ground and new techniques.

It is interesting to contrast the approaches pursued by the various groups, all working on the same problem, but with different emphasis. The Soviets have had the broadest program, strengthened and encouraged by their early successes. At Berkeley, concern centered on collective instabilities. The Garching workers chart a path around betatron resonances and vacuum problems. Maryland has a particularly fast version of the static compressor. And there are still untried parameters such as azimuthal magnetic field. With these differences in approach, there have been difficulties in applying one group's findings to another group's problems.

To handle this communication problem and make steady progress, we should try to have better diagnostics and more control of experimental variables. In this way, we can build up the shared store of data and knowledge that we separately have been seeking.

Finally, I am encouraged to see new and less demanding applications appearing for the electron ring. I mentioned the atomic spectroscopy. Even simpler would be use of the electron ring to get basic ionization and cross-section data for use in the development of heavy-ion sources. Through new applications, the new user will profit while contributing to a steady and orderly development of electron ring technology.

References

1. L.J. Laslett, "Current Understanding of ERA", IEEE Trans. Nucl. Sci. NS-20, No. 3, 271-275 (June 1973).

2. A. Faltens and L.J. Laslett, "Longitudinal Coupling Impedance of a Stationary Electron Ring in a Cylindrical Geometry", Particle Accelerators, 4, 151 (1973).

3. P. Merkel, private communication.

4. G.R. Lambertson, et.al., "Experiments on Electron Rings at Berkeley", Particle Accelerators, 5, 113-120 (1973).

5. C. Pellegrini and A. Sessler, "Theory of the Non-Linear Negative-Mass Instability", Lawrence Berkeley Laboratory Report - ERAN-203, January 1973 (unpublished).

6. J. Hauptman et.al., "Compressor Design for Intense Electron Rings", Lawrence Berkeley Laboratory Report LBL-2489, (1974).

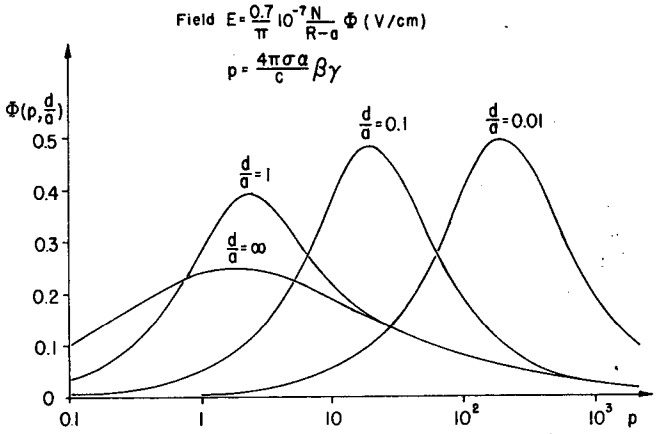

Figure 1 - Axial retarding field E for a ring of N electrons moving in a metallic cylinder. R[cm] is radius of ring; R + a[cm] is radius of cylinder wall; d(cm) is thickness of wall of conductivity $\sigma[\sec^{-1}]$.

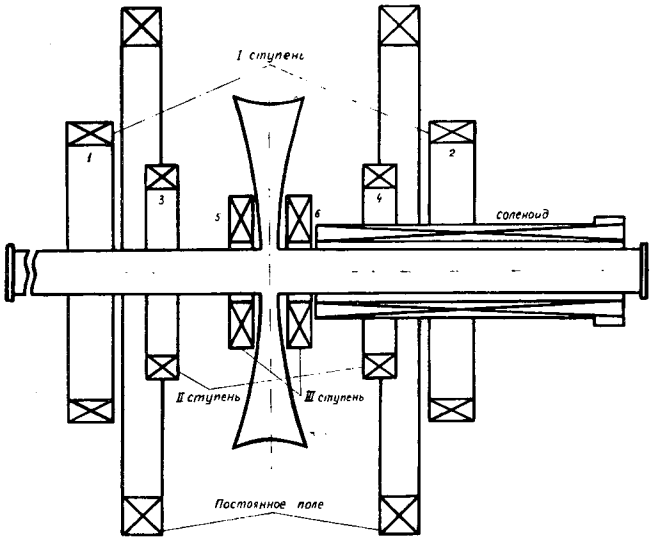

Figure 2 - Coils and chamber of collective ion accelerator at JINR.

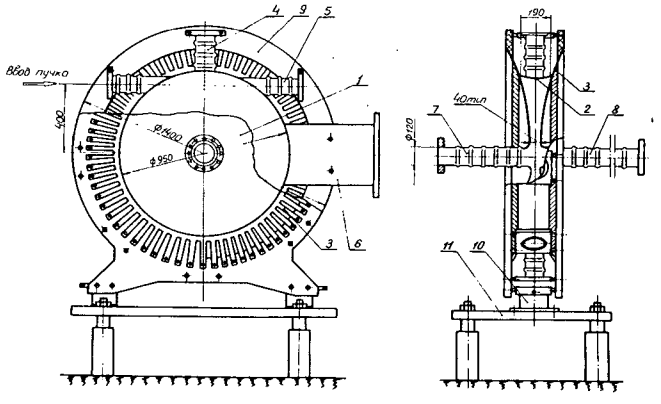

Figure 3 - Thin-wall steel vacuum chamber of JINR compressor.

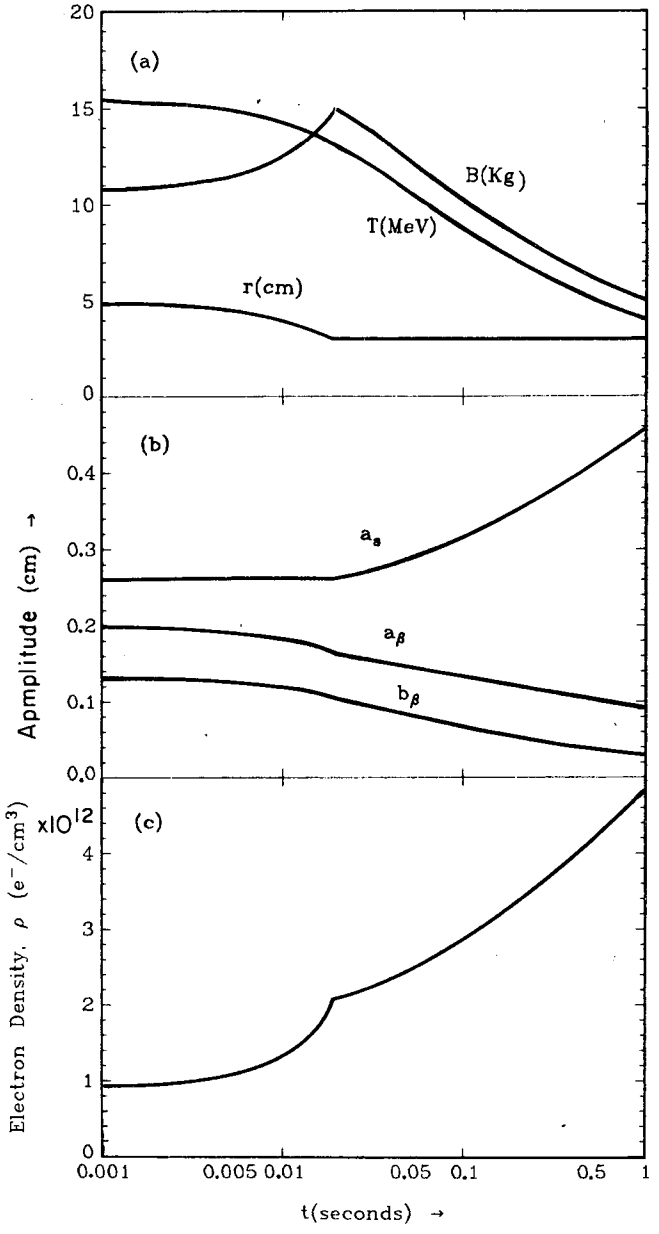

Figure 4 - Changing parameters of a stored electron ring intended for study of atomic spectra.

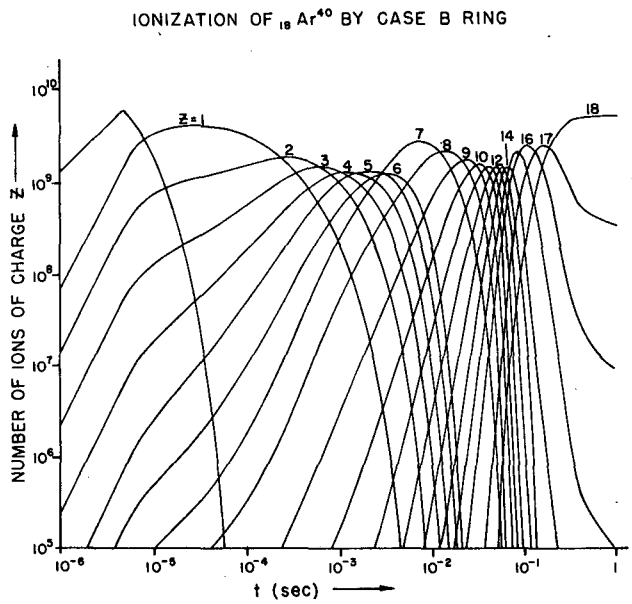

Figure 5 - The progressive abundances of ionized states of Argon, approaching equilibrium with the background gas at one second.

LEGAL NOTICE

This report was prepared as an account of work sponsored by the United States Government. Neither the United States nor the United States Atomic Energy Commission, nor any of their employees, nor any of their contractors, subcontractors, or their employees, makes any warranty, express or implied, or assumes any legal liability or responsibility for the accuracy, completeness or usefulness of any information, apparatus, product or process disclosed, or represents that its use would not infringe privately owned rights.

TECHNICAL INFORMATION DIVISION
LAWRENCE BERKELEY LABORATORY
UNIVERSITY OF CALIFORNIA
BERKELEY, CALIFORNIA 94720