BECON-95
SLAC-PUB-5525
LBL-30604
May 1991
(A/I)

Prompt Bunch by Bunch Synchrotron Oscillation Detection via a Fast Phase Measurement*

D. Briggs, P. Corredoura, J. D. Fox, A. Gioumousis
W. Hosseini, L. Klaisner, J.-L. Pellegrin, K. A. Thompson
Stanford Linear Accelerator Center, Stanford University, Stanford, CA 94309 USA
and
G. Lambertson
Lawrence Berkeley Laboratory, University of California, Berkeley, CA 94720 USA

Abstract: An electronic system is presented which detects synchrotron oscillations of individual bunches with 4 ns separation. The system design and performance are motivated by the requirements of the proposed B Factory facility at SLAC.

Laboratory results are presented which show that the prototype is capable of measuring individual bunch phases with better than 0.5 degree resolution at the 476 MHz RF frequency.

Introduction

Many accelerator facilities have incorporated feedback systems to suppress the growth of coupled-bunch oscillations [1-5] . The proposed SLAC-LBL-LLNL B Factory design presents several challenges in the design of transverse and longitudinal feedback systems. To achieve a design luminosity of 3*10**33, the B Factory will contain 1658 bunches per ring (total current 1.5 A for the high energy ring, 2.1 A for the low energy ring), spaced every other RF bucket at the 476 MHz RF frequency. This large number of bunches, plus the short (4.2 ns) inter-bunch period, forces difficult constraints on the detection, processing and energy correction stages of the feedback system. Our proposed feedback design uses a bunch by bunch (time domain) strategy that treats each bunch as an independent oscillator . [6-11] This approach has the additional advantage that it damps not only coupled bunch oscillations, but any disturbance, such as injection timing errors, that may induce energy oscillations.

Principle of Operation

Figure 1 presents a system constructed to test and evaluate various signal detection schemes for the longitudinal feedback system. In this laboratory prototype we have implemented a two bunch system with a time structure similar to the planned accelerator. The master oscillator of this model uses a 102 MHz oscillator that is harmonically multiplied by a factor of 28 to generate a phase synchronous 2856 MHz reference. The 102 MHz oscillator provides the excitation for two step recovery diodes which generate 60 ps FWHM impulses to simulate beam bunches. Two analog phase shifters are used to adjust the spacing of the bunches relative to the 102 MHz master oscillator, and these phase shifters allow simulated synchrotron oscillations to be impressed on the 60 ps impulses. We space

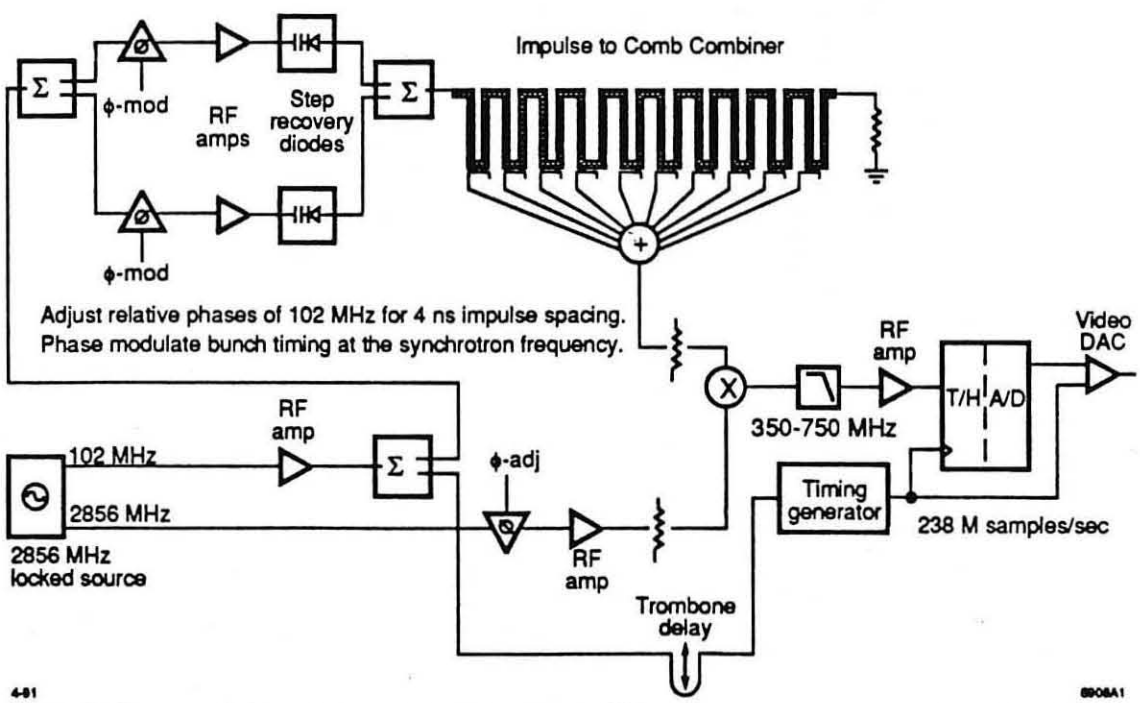

Figure 1. Block diagram of the prototype front end circuitry. This system converts a beam signal impulse into a 2856 MHz 8-cycle tone burst, and compares the phase of the burst against a reference oscillator. A 250 MHz A/D digitizes the phase each bunch crossing. The proposed B Factory design has 1658 bunches with a 4.2 ns bunch interval. The laboratory prototype uses 2 step recovery diodes and phase shifters to simulate bunches with independent synchrotron oscillations.

* Work supported by Department of Energy contract DE-AC03-76SF00515.

Contributed to the IEEE Particle Accelerator Conference, San Francisco, CA, May 6-9, 1991

the nominal positions of the bunches with a 4.2 ns interval which corresponds to the B Factory ring design, however in our test there is an extra 2 ns gap following the second bunch, after which the sequence repeats. With this system we can simulate independent synchrotron oscillations of the two bunches at frequencies up to 100 kHz, and study the performance of the detection system.

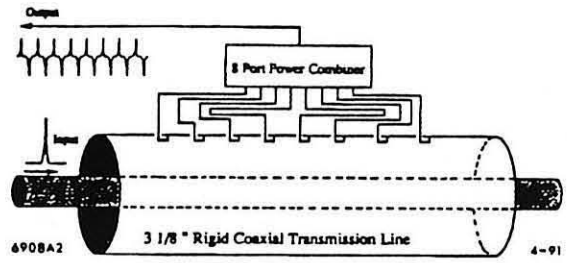

Figure 2. The eight quarter wave couplers are aligned 10 cm apart along the transmission line. Their outputs are connected to the power combiner with semi-rigid cables of equal length.

Figure 1 also shows the detection circuitry. A periodic coupler is used to generate a short eight cycle tone burst from each bunch. The phase of each burst is compared against the 2856 MHz reference oscillator in the double balanced mixer. The output of the phase detector is filtered with a 750 MHz low pass filter to remove the second harmonic and to limit the bandwidth for noise reduction. A fast analog to digital converter (with an internal track and hold) digitizes the phase error signal at a 238 MHz rate [12]. This process provides a unique error signal for each bunch crossing. In a complete feedback system this digital data stream would undergo further digital processing, but in our laboratory model we reconstruct the digitized values with a fast digital to analog converter which allows us to use traditional lab instruments to study the system performance [13]. A digital timing system, constructed with 100 K ECL logic, is clocked by the 102 MHz master oscillator and provides the timing for the A/D and D/A stages. This system allows us to measure the resolution, noise, and inter-bunch isolation of the bunch phase measurements.

Results

The beam pick-up generates a short (less than 4 ns) tone burst at the 2856 MHz frequency. We use a periodic coupler, rather than a tuned resonant structure, to avoid coupling between adjacent bunches. We have studied two possible configurations. We have constructed a comb generator in a coaxial geometry, using an array of quarter wave couplers aligned 10 cm apart along a coaxial transmission line. All the coupler outputs are then combined coherently in a power combiner as shown in Fig. 2. As an alternative, we have also fabricated and measured a structure constructed of periodically coupled stripline circuits. This latter approach minimizes the number of RF connections, and in the case of a beam coupled structure, would also minimize the number of vacuum feedthroughs.

The measured response of the coaxial generator is shown in Fig. 4. We see the signature of the time of arrival of each bunch as an eight cycle tone burst. There is a small amount of residual ringing (approximately 5–10%) evident in the time domain measurements. In comparison, the stripline fabricated generator produced fewer reflections, but due to its larger design coupling value and skin effect losses displayed less amplitude uniformity during the output burst.

Lab Measurements of Combined System

This periodic coupler output has been used to study the performance of the electronic system. Fig. 4 presents the analog output signal of the mixer for the two bunch system; also shown in the figure is the reconstructed analog output of the D/A converter. We can see that the bunch spacing alternates between 4 and 6 ns, as produced by our beam simulator. The response shows the bandwidth required for independent measurements on bunches with the 4.2 ns spacing.

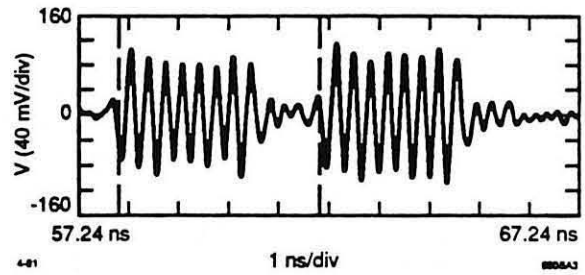

Figure 3. Measured response of the coaxial comb generator for two simulated beam signals with 4 ns bunch spacing.

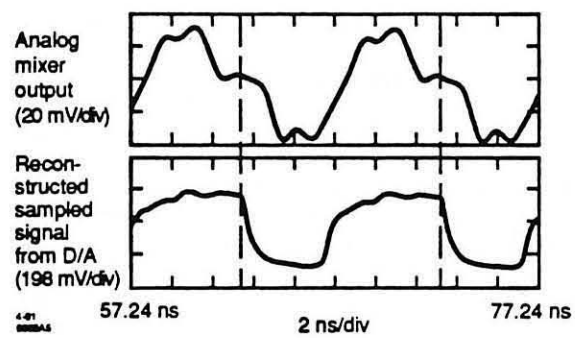

Figure 4. Measured response of the mixer (phase detector) for two bunches nearly 180 degrees apart. Also shown is the digitized phase signal after reconstruction in the D/A.

Figure 5 shows the system response for six independent DC phase offsets of the bunches. The top traces show the analog mixer response for 3 distinct DC phases of bunch A, with bunch B left undisturbed. Similarly, the lower pair of traces show three DC phases of bunch B, with bunch A left undisturbed. Again, the lowest traces are the reconstructed D/A output showing excellent isolation of the bunches.

Figure 6 is an oscilloscope photograph which shows the AC response of the system. In these measurements a 10 KHz AC sine wave is impressed on the control signal of the step recovery diode of a selected bunch. The AC modulation exactly simulates a synchrotron oscillation. In the figure bunch A is modulated with an amplitude corresponding to 0.7 degrees p/p (+/-0.006 radians) at the 476 MHz ring RF frequency. We note the prompt in-phase detection of this oscillation, which corresponds to a +/- 2ps time displacement of the bunch. The rms noise floor in this measurement is found to be better than 0.1 degrees at the 476 MHz RF frequency within the 10 kHz oscillation bandwidth.

The bunch to bunch coupling in our system is measured using a variant of the technique used in Fig. 6. By driving bunch A with a large oscillation, and detecting the bunch B output signal at the modulation frequency we can measure the coupling from A to B.

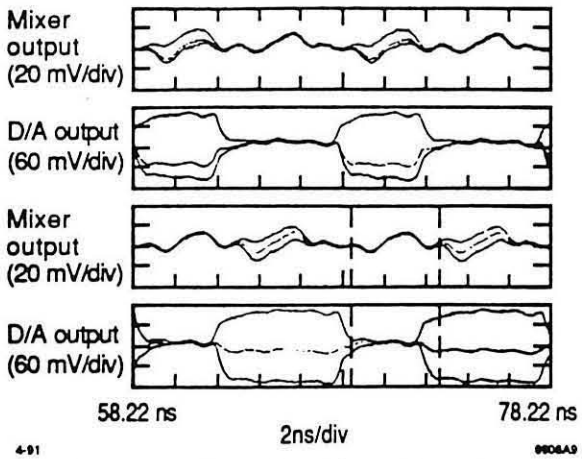

Figure 5. The upper trace shows the analog output signal of the phase detector (mixer) for three phase offsets of Bunch "A", while the next trace shows the digitized and reconstructed waveform of the upper trace. The lower traces are the same measurement of three phase offsets of bunch "B" with bunch "A" undisturbed.

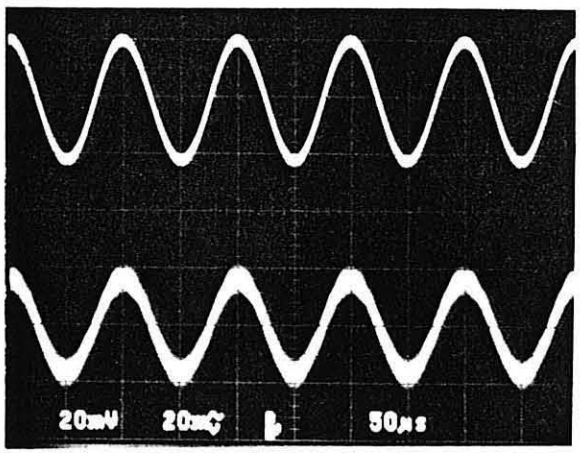

Figure 6. The upper trace shows the signal applied to a step recovery diode phase shifter, and represents a synchrotron oscillation amplitude of 0.7 degrees (+/- 0.006 radians) at the 476 MHz RF frequency. The lower trace shows the reconstructed D/A output.

Table 1 presents a summary of the measured performance of our various system components for the configuration of Fig. 1. We see that the performance of the two comb generators is similar. We also note that the coupling between the bunches for the A to B and B to A cases is very similar, notwithstanding the extra 2 ns present for the B to A case. The noise performance of the system is consistent with the eight bit quantization of the digitizer, and suggest that a system using this technique could easily achieve measurement resolutions of better than 0.5 degrees at the 476 MHz RF frequency.

Summary and Conclusions

We have demonstrated a signal processing system designed to detect longitudinal oscillations of stored bunches in a B Factory like storage ring. Our prototype system has been shown to be capable of measuring the phase of individual bunches separated by 4.2 ns with better than 0.5 degree resolution (at 476 MHZ). We have shown that the periodic coupler is capable of generating isolated tone bursts from the simulated bunches, and that the detection of individual bunch phases for a large number of bunches (1658) with a 4.2 ns interval is feasible.

Table 1
Isolation, Resolution, and Noise Measurements

Comb Generator	Configuration	Isolation
Coaxial	A to B	25.9 dB
Coaxial	B to A	28.5 dB
Microstrip	A to B	26.7 dB
Microstrip	B to A	29.4 dB
Phase Detector Range		±15° at 476 MHz
Phase Detector Resolution		1.3 mRad at 476 MHz
	or	0.08° at 476 MHz
Phase Detector Noise		1.55 mRad rms at 476 MHz
	or	0.09° rms at 476 MHz

Acknowledgments

The authors would like to thank J. Dorfan, A. Hutton, and M. Zisman for their encouragement and support for this project, and H. Schwarz and J. Judkins for the loan of specialized laboratory equipment.

References

[1] D. Heins, R. D. Kohaupt et al., "Wideband Multibunch Feedback Systems for PETRA," DESY 89-157, 1989.
[2] P.L. Corredoura, J.-L. Pellegrin, H.D. Schwarz and J.C. Sheppard, "An Active Feedback System to Control Synchrotron Oscillations in the SLC Damping Rings," in Proc. Particle Accelerator Conf., 1989, vol. 3, p. 1879.
[3] Toshio Kasuga, Masami Hasumoto, Toshio Kinoshita and Hiroto Yonehara, "Longitudinal Active Damping System for UVSOR Storage Ring," Japanese Jour. Applied Physics, vol. 27, no. 1, 1988, p. 100.
[4] M. A. Allen, M. Cornacchia, and A. Millich, "A Longitudinal Feedback System for PEP," in IEEE Trans. Nucl. Sci. NS-26, 1979, no. 3, p. 3287.
[5] E. Higgins, "Beam Signal Processing for the Fermilab Longitudinal and Transverse Beam Damping System," in IEEE Trans. Nucl. Sci. NS-22, 1975, no. 3., p. 1581.
[6] "An Asymmetric B Factory based on PEP," Conceptual Design Report, SLAC 372, 1991.
[7] K. A. Thompson, "Simulation of Longitudinal Coupled-Bunch Instabilities," B Factory Note ABC-24, 1991, SLAC.
[8] B Factory Accelerator Task Force, S. Kurokawa, K. Satoh and E. Kikutani, Eds., "Accelerator Design of the KEK B Factory," KEK Report 90-24, 1991.
[9] C. Pellegrini and M. Sands, "Coupled Bunch Longitudinal Instabilities," SLAC Technical Note PEP-258, 1977.
[10] R. F. Stiening and J. E. Griffin, "Longitudinal Instabilities in the Fermilab 400 GeV Main Accelerator," IEEE Trans. Nucl. Sci. (1975), NS-22, no. 3, p. 1859.
[11] D. Briggs et al., "Computer Modelling of Bunch by Bunch Feedback for the SLAC B Factory Design," Proc. Particle Accelerator Conference, 1991.
[12] Tektronix Corporation, TKADC-20C 250 MSample/Sec Hybrid Analog to Digital Converter.
[13] Brooktree Corporation, BT108BC Digital to Analog Converter.