LBL-30706

Lawrence Berkeley Laboratory
UNIVERSITY OF CALIFORNIA

Accelerator & Fusion Research Division

Presented at the IEEE 1991 Particle Accelerator Conference,
San Francisco, CA, May 6–9, 1991,
and to be published in the Proceedings

Physics and Technology Challenges of $B\bar{B}$ Factories

M.S. Zisman

May 1991

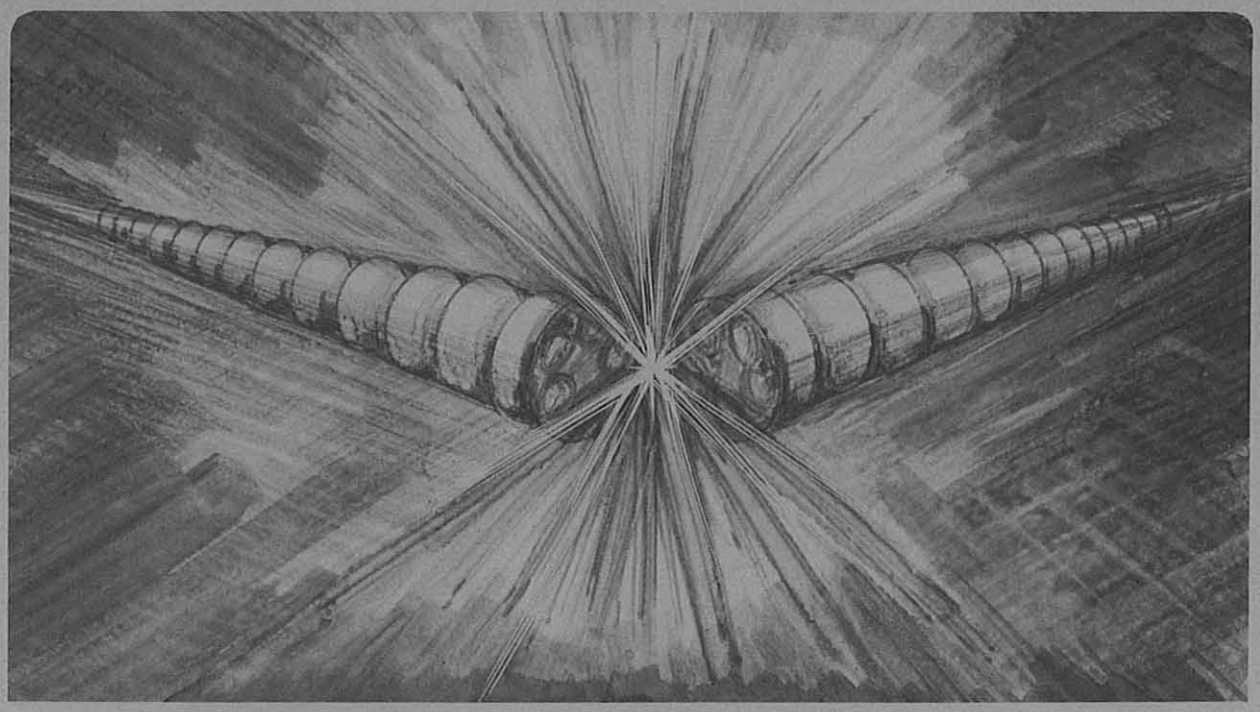

Prepared for the U.S. Department of Energy under Contract Number DE-AC03-76SF00098

DISCLAIMER

This document was prepared as an account of work sponsored by the United States Government. Neither the United States Government nor any agency thereof, nor The Regents of the University of California, nor any of their employees, makes any warranty, express or implied, or assumes any legal liability or responsibility for the accuracy, completeness, or usefulness of any information, apparatus, product, or process disclosed, or represents that its use would not infringe privately owned rights. Reference herein to any specific commercial product, process, or service by its trade name, trademark, manufacturer, or otherwise, does not necessarily constitute or imply its endorsement, recommendation, or favoring by the United States Government or any agency thereof, or The Regents of the University of California. The views and opinions of authors expressed herein do not necessarily state or reflect those of the United States Government or any agency thereof or The Regents of the University of California and shall not be used for advertising or product endorsement purposes.

Lawrence Berkeley Laboratory is an equal opportunity employer.

LBL-30706
ESG Note-114

PHYSICS AND TECHNOLOGY CHALLENGES OF $B\overline{B}$ FACTORIES*

Michael S. Zisman

Accelerator and Fusion Research Division
Lawrence Berkeley Laboratory
University of California
Berkeley, CA 94720

* This work was supported by the Director, Office of Energy Research, Office of High Energy and Nuclear Physics, High Energy Physics Division, of the U.S. Department of Energy under Contract No. DE-AC03-76SF00098.

PHYSICS AND TECHNOLOGY CHALLENGES OF $B\overline{B}$ FACTORIES*

Michael S. Zisman
Accelerator & Fusion Research Division, Lawrence Berkeley Laboratory, Berkeley, CA 94720

Abstract

An e^+e^- collider designed to serve as a B factory requires a luminosity of 3×10^{33} cm^{-2} s^{-1}—a factor of 20 beyond that of the best present collider (the CESR ring)—and thus presents a considerable challenge to the accelerator builder. To optimize the experiment, it is necessary that the $B\overline{B}$ system have a moving center-of-mass, which implies different energies for the two beams (hence an "asymmetric" collider). This feature dictates that a two-ring configuration be used. Accelerator physics issues that arise in such a design are related to the need to tightly focus the beams to a vertical beta function on the order of 1 cm, to bring the beams from two different rings into collision and then cleanly separate them again, and to mask the detector region sufficiently to permit measurements with very large beam currents passing through the interaction region. In addition, the process of optimizing the luminosity for asymmetric collisions breaks new ground.

Because the luminosity is limited by the beam-beam interaction, any large improvement must come from considerably increasing both the beam current and the number of bunches in the ring. These choices place many demands on accelerator technology as well as accelerator physics. Vacuum systems must be designed to handle the thermal load from a multi-ampere beam of 8–9 GeV and to maintain an adequate running pressure (below 10 nTorr) in the face of a large gas load from synchrotron radiation induced photodesorption. An RF system capable of supporting the high beam currents must be developed. To reduce the growth of potentially strong multibunch instabilities, the cavity higher-order modes (HOMs) must be highly damped to $Q \leq 70$. Even with a well-optimized RF system, the high beam currents typically mean that wideband multibunch feedback systems (both longitudinal and transverse) are needed to maintain beam stability. Effective approaches to deal with these issues have been identified by the various B factory design groups, and representative examples will be mentioned.

I. INTRODUCTION

There has been growing interest in the past several years in the design of a high-luminosity e^+e^- collider, operating at the $\Upsilon(4S)$ resonance, to serve as a "B factory." The primary physics motivation for such a facility is to determine the origins of *CP* violation. This phenomenon is expected to be easily observable in the B system, and determining its origins will provide a stringent test of the Standard Model. *CP*-violation studies benefit considerably from having a moving center of mass for the $B\overline{B}$ system, so an asymmetric collider is preferred. The physics capability of such a facility is not restricted solely to *CP*-violation studies; rich programs in rare B decays, Υ spectroscopy, charm and tau physics, and two-photon physics will also be available.

Although both dual-storage-ring [1–6] and linac-plus-storage-ring [7] designs have been studied, the focus here will be on the former configuration, storage-ring-based systems. All presently active proposals have chosen this design approach.

II. REQUIREMENTS

To study *CP* violation at the $\Upsilon(4S)$ resonance with an asymmetric collider, a peak luminosity of 3×10^{33} cm^{-2} s^{-1} is needed [8]. The actual figure-of-merit for the collider, however, is not the peak but the *integrated* luminosity. This is because the physics measurements require the study of an abundant sample of B decays to obtain statistically significant results. It is in this sense that we refer to the collider as a "factory."

The luminosity can be expressed in terms of the appropriate collider parameters as [5]

$$\mathcal{L}\left[\mathrm{cm}^{-2}\mathrm{s}^{-1}\right] = 2.17 \times 10^{34} \xi \left(1 + r\right) \left(\frac{I \cdot E}{\beta_y^*}\right)_{+,-} \tag{1}$$

where I is the total beam current (A), β_y^* is the vertical beta function at the interaction point (cm), r is the beam aspect ratio (σ_y^*/σ_x^*, i.e., 0 for flat, 1 for round beams), E is the beam energy (GeV), and ξ is the beam-beam tune shift parameter. The subscript on the rightmost factor in Eq. (1) signifies that it can be evaluated using the parameters from either the electron (–) or positron (+) ring. The beam-beam tune shift parameter is not really under our control, and the beam energy is constrained by the need to run at the $\Upsilon(4S)$ resonance, requiring that $E_+ \cdot E_- = 28$ GeV^2.

It is clear from inspection of Eq. (1) that a twentyfold increase in luminosity compared with existing colliders requires high beam currents and small beta functions at the interaction point (IP). The requirement for low beta functions leads to some practical difficulties. For example, low beta functions are produced by strong quadrupoles, and these make the chromaticity correction difficult. Moreover, to take advantage of the low beta functions, there is a concomitant need for short bunches, such that $\sigma_\ell \leq \beta^*$. To produce the short bunches takes a high RF voltage, and thus considerable RF hardware. Taken together, these considerations imply a practical limit corresponding to $\beta_y^* = 1$–2 cm.

Because of the limitation from the beam-beam interaction, that is, the limit on the maximum value of ξ, a large increase in beam current implies the use of many more bunches than is typical of today's colliders. (Clearly it is possible to put high current in fewer bunches, but the single-bunch intensity is limited by the transverse mode-coupling instability, and the

* This work was supported by the Director, Office of Energy Research, Office of High Energy and Nuclear Physics, High Energy Physics Division, U.S. Department of Energy, under Contract No. DE-AC03-76SF00098.

beam-beam limit pushes the design towards an unreasonably large emittance.) Given little maneuvering room, it is reasonable for the designer to choose the number of bunches to be sufficiently large that *the parameters of a single bunch remain relatively standard.* This is the approach followed by essentially all B factory design groups. Typical parameter ranges for the designs considered here appear in Table 1.

Table 1
Typical B Factory Parameter Ranges

Parameter	Value
Total current, I (A)	1–3
Single-bunch current, I_b (mA)	1–5
No. of bunches, k_B	100–2000
Horizontal emittance, ε_x (nm·rad)	100
Bunch length, σ_ℓ (cm)	1
Energy, E_-/E_+ (GeV)	8/3.5 or 9/3.1
Luminosity, $\mathcal{L}$ ($cm^{-2}\,s^{-1}$)	$1\text{–}3 \times 10^{33}$

III. PHYSICS CHALLENGES

The design of a high-luminosity asymmetric B factory leads to physics challenges primarily in the areas of lattice design and the beam-beam interaction. In the first area, the issues are related to the production of low β_y^* values, the separation of the two beams, and the design of the masking system. In the second area, the physics issues are centered around the techniques for optimizing the luminosity for the new parameter regime of asymmetric collisions.

Lattice Design

Low beta function. To provide the required luminosity, it is necessary to produce low β_y^* values, on the order of 1 cm, without introducing excessive chromaticity into the lattice. To accomplish this, the low-beta quadrupoles must be located as close as possible to the IP, as shown in Fig. 1 for the SLAC/LBL/LLNL design [5]. Although the permissible chromaticity can only be determined by actual particle tracking simulations, a good rule to apply is that β/s_Q should be less than 100, where s_Q is the distance of the quadrupole from the IP and β is the beta function at the quadrupole location. As can be seen in Fig. 1, the low-energy beam (LEB) focusing does not present a problem, but the high-energy beam (HEB) is more difficult. To locate the HEB quadrupole closer to the IP, it is designed as a superconducting Panofsky-style septum quadrupole. Equivalent design approaches with conventional magnets have been followed by other groups [2, 3, 4].

Because the LEB focusing quadrupoles are close to the IP, they lie within the solenoidal field of the detector. This restricts the choice of technology to either permanent magnets or superconducting magnets. Solutions using one or both of these technologies have been adopted by various designers. An example of an interaction region layout based on superconducting magnets is shown in Fig. 2, taken from Ref. [4]. In this case, the solenoid field is compensated by means of "anti-solenoid" windings to avoid coupling the horizontal and vertical beam motions. When using permanent magnets, as in Fig. 1, coupling is compensated with skew quadrupoles located outside the detector region. The placement and dimensions of the low-beta quadrupoles are restricted by the "detector stay-clear" area, usually defined as a 300 mrad cone.

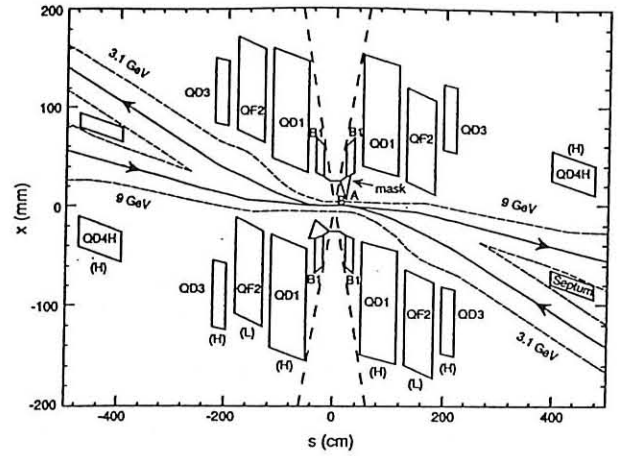

Figure 1. Anamorphic plan view of a B Factory interaction region for head-on collisions [5].

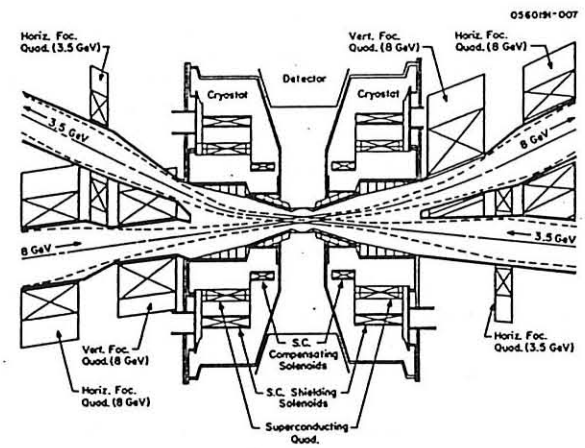

Figure 2. Configuration of a B factory interaction region (for a non-zero crossing angle geometry) with superconducting magnets [4].

Beam separation. The technique used for beam separation in an asymmetric B factory depends in large measure on the design approach. For the commonly adopted head-on collision case, the separation is accomplished by means of dipoles located close to the IP followed by offset quadrupoles. The separation dipoles could either be run in a symmetric or an asymmetric configuration; the latter case, illustrated in Fig. 1, is referred to as an "S-bend" geometry. The advantages of the S-bend geometry are that it decouples the masking solutions for the two rings, and it permits the synchrotron radiation fans generated by the separation magnets to exit the interaction region without creating severe background problems. It is worth noting here that an S-bend layout of the type shown in Fig. 1 lends itself well to being converted into a non-zero crossing angle scheme (cf. Fig. 2) without major hardware rearrangements.

Masking. A successful masking scheme must take into account all sources of backgrounds, including synchrotron radiation from the separation magnets and offset quadrupoles, lost particles from beam-gas interactions, and lost particles during injection [9]. It is also important that the solution adopted be insensitive to the details of the beam tail distribution and to small displacements of masks, magnets, and beam orbits. In general, backgrounds are never completely understood, so it is desirable to aim for safety margins of more like a factor of ten than a factor of two. It is good practice for designers of high luminosity accelerators to have close involvement with the detector users. The machine-detector interface is one of the most crucial aspects of the machine design, and the effort and care spent on it are evident in the various design reports that are now available [1–6].

Beam-Beam Interaction

Choice of Tune Shift. The beam-beam tune shift in the case of an asymmetric collider has not been studied experimentally. In the absence of such data, most design groups have taken guidance from the existing body of data on symmetric collisions [10]. It can be seen from such data that the beam-beam tune shift parameter ξ lies in the range from 0.02 to 0.06 for present colliders. Because most machines have reached $\xi = 0.03$, this value has generally been adopted by B factory design groups as a prudent target figure. (The KEK group [2] has adopted a larger tune shift value of 0.05, based on their choice to use very short bunches, 0.5 cm.) Note that this value is *not* intended to represent a beam-beam limit, it is merely a design parameter. To stay closer to the existing body of knowledge, head-on collisions are the initial design choice of all but one group [4]. For each case, beam-beam simulations are being carried out to demonstrate that the design choice is a realistic one. Thus far, it is fair to say that no new physics issues have arisen that are related to the asymmetry itself.

Energy Transparency. At present, most designers have adopted some set of conditions intended to make the asymmetric beam-beam collisions behave similarly to the well-studied symmetric case. The so-called "energy transparency" conditions postulated by Chin [11] require equality of beam-beam parameters, beam sizes, tune modulation from synchrotron oscillations at the IP, and damping decrements, $\lambda = T_0/\tau_{SR}$. Thus, we choose parameters such that

$$\xi_{x,+} = \xi_{x,-} \text{ and } \xi_{y,+} = \xi_{y,-}$$

$$\sigma_{x,+} = \sigma_{x,-} \text{ and } \sigma_{y,+} = \sigma_{y,-}$$

$$\left(\frac{\sigma_L \nu_s}{\beta^*_{x,y}}\right)_+ = \left(\frac{\sigma_L \nu_s}{\beta^*_{x,y}}\right)_-$$

$$\lambda_+ = \lambda_-$$

Further constraints have been put forth by Krishnagopal and Siemann [12] and these "equal tuneprint" conditions have been adopted in some designs [2,4]. The present view is that such symmetrization attempts are convenient (in the sense of restricting the parameter space available), but may not be entirely necessary. It is also unclear whether the restricted parameters corresponding to the symmetry conditions guarantee the optimum luminosity. It has been shown in one case [5] that the effects of parasitic collisions intrinsically tend to break the symmetry between the two beams anyway. This aspect of the parameter optimization needs further work.

Crab Crossing. To permit a non-zero crossing angle while avoiding the excitation of synchrobetatron resonances, it is attractive to consider the possibility of crab crossing. This scheme [13] involves the use of a transverse deflecting mode of crab RF cavities, located at a phase difference of

$$\Delta\phi = (n \pm 1/4)\, 2\pi$$

from the IP, to rotate the head and tail of the bunches such that they collide head-on at the IP, but in a transversely moving reference frame.

The voltage required to perform the rotation is given by

$$V_c = \frac{(E/e)\phi\lambda_c}{2\pi\sqrt{\beta_{xc}\beta^*_x}} \tag{2}$$

For typical parameters, V_c is about 2 MV. Simulations done to date [4,5] suggest that voltage and phase tolerances are reasonable, so the technique should be viable. Nonetheless, prudence dictates that a small crab angle, on the order of 10 mrad, is the best choice. Such an angle is sufficiently small that it does not obviate the need for common quadrupoles for the two beams, as shown in Fig. 2. It is clear that crab crossing is a promising technique, though it has not yet been tested. Because of the absence of separation dipoles, the synchrotron radiation liberated near the IP is reduced with the crab crossing scheme compared with the head-on case; this should be of benefit in terms of detector backgrounds.

IV. TECHNOLOGY CHALLENGES

The physics issues discussed in Section III make certain implicit assumptions about the hardware capabilities in a B factory. For example, beam lifetime estimates assume that the average pressure in the storage rings will remain below about 10 nTorr (N_2 equivalent) despite the high gas loads associated with possibly several amperes of circulating beam. Similarly, luminosity estimates assume that these high beam currents can be supported without melting anything. The assessment of growth times for coupled-bunch instabilities is based on the ability to damp the dangerous HOMs of the RF cavities to $Q \leq 70$. Perhaps most importantly, we assume that the integrated luminosity can be maintained, that is, that the reliability of the components is such that the collider does not "spend all of its time in the shop."

In this section we discuss the technology areas where the main challenges arise. These include the vacuum system, the RF system, and the feedback system. It is worth commenting here that some other items, such as the separation magnets indicated in Figs. 1 and 2 (and the equivalent components in each of the other interaction region designs), are nontrivial design tasks as well.

Vacuum System

There are two main challenges for a B factory vacuum system:

- withstanding the high thermal flux from the synchrotron radiation power
- maintaining a low pressure in the face of considerable synchrotron radiation induced gas desorption

The average linear power density for the chamber is given by

$$P_L = \frac{P_{SR}}{2\pi\rho} \propto \frac{E^4 I}{\rho^2} \qquad (3)$$

This quantity varies widely among the various designs, as it depends on both the beam current requirement and the bend radius of the ring magnets. The lowest power density is that of the KEK design [3], 1.5 kW/m; the highest value, 25 kW/m comes from the "hard-bend" region of the Cornell design [4]. In terms of thermal management, the more important quantity is the areal density. The height of the synchrotron radiation fan at the chamber wall is typically about 0.4 mm, in which case the areal power densities range from 0.4 to 5.6 kW/cm^2.

The photodesorption gas load in the B factory rings can be written as

$$Q_{gas} = 2.42 \times 10^{-2}\, E_{[GeV]}\, I_{[mA]}\, \eta_F \quad [\text{Torr}\cdot\text{L/s}] \qquad (4)$$

where the desorption coefficient, η_F, represents the number of molecules produced per incident photon. The desorption coefficient depends on the chamber material, its history, and the photon dose to which the material has been exposed. After exposure to a few hundred ampere-hours of beam, values of low-to-mid 10^{-6} are expected for a copper chamber.

The two approaches that can be adopted for the B factory are a standard chamber shape, with a pumping channel on the inner radius, or an antechamber design in which the synchrotron radiation photons exit through a slot in the wall into an external pumping chamber. For cases where the design pressure can be achieved with a pumping speed of $S \approx 100$ L/s/m, no antechamber is needed. For cases where $S \geq 500$ L/s/m is required, standard distributed ion pumps will not suffice. Then the system of choice is to use non-evaporable getter (NEG) or titanium sublimation pumps (TSPs). In a difficult case, such as the hard-bend region of the Cornell design, where the photon flux is high and where the pressure has been held to 1 nTorr to reduce backgrounds, both types of pumps are used with an antechamber configuration (see Fig. 3) to give a total pumping speed of about 2500 L/s/m.

Most designers favor a chamber made from copper or a copper alloy, similar to the chamber installed in the electron ring at HERA. In addition to the low desorption coefficient mentioned above, copper has good thermal properties and is self-shielding for the synchrotron radiation emitted by the beams (thus obviating the need for a lead liner on the outside of the chamber).

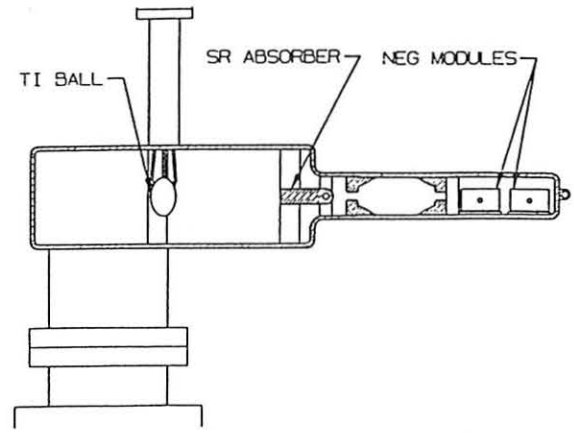

Figure 3. Vacuum chamber for the transition region [4] where the bend radius is only 45 m and the pressure must be held to less than 1 nTorr of CO and CO_2.

RF System

The main challenges for the RF system include:

- replacing the large synchrotron radiation power loss
- minimizing the HOM impedance per cell

The synchrotron radiation losses for an 8 or 9 GeV beam in the high-energy ring of a B factory could be 5 MW at a design luminosity of 3×10^{33} cm^{-2} s^{-1}. The issue is not the power per se, however, but is related to the need for controlling the HOM impedance by reducing the number of cavities. This results in a requirement for high input power through the cavity window—up to 500 kW for a room-temperature system. (To put this value in context, it is only half of the power transmitted through the output window of a modern klystron.) Special windows are being designed to handle this power level. It is also important to minimize the HOM impedance of an individual cavity by damping techniques in order to ensure practical parameters for the feedback system.

Both room-temperature [1–3,5] and superconducting [4] cavity designs are being actively developed for B factory use. In the room-temperature case, single- [1,3,5] or two-cell [2] cavities are being considered. Waveguides or slots in the cavity body are used to couple out the dangerous HOMs. With this technique, damping to a Q of about 30 has been demonstrated (at low power) in a pillbox cavity [5]. It is not possible to use the waveguide technique with superconducting cavities, but in this case it is not necessary to optimize the shunt impedance of the cavity and a large beam aperture is acceptable. In the Cornell approach, the aperture is sufficiently large that the HOMs propagate to a room-temperature ferrite load on the inner surface of the beam tube. Calculated damping to the level of $Q \approx 70$ is obtained [4].

The choice of superconducting technology will minimize the number of RF cells required. However, in the heavily beam loaded regime of a B factory, the advantage is only about 30% (assuming the same limitation on cavity window power as in the room-temperature case). In designs involving crab cavities, the use of superconducting technology is likely to be

preferred. For this application the requirements are high voltage and low power, which match well with the strengths of superconducting RF. To serve as a crab cavity, the cell must be driven at a transverse deflecting mode (TM110) rather than at the fundamental.

Feedback System

The requirement here is to control the growth of potentially strong coupled-bunch instabilities driven by the HOMs of the RF system. Due to the high beam current and large number of bunches, the instabilities can grow rapidly (≈ 1 ms), and the bandwidth requirements can be high (≈ 100 MHz). It is worth noting that the response of the feedback system to injection transients may dominate the power requirements. This issue favors an injection system that is phase-locked to the ring RF systems. It also helps to inject the beam in many small portions rather than large amounts of charge all at once.

A promising approach is to use a bunch-by-bunch system operating in the time domain [14]. An advantage of this choice is that the system can damp dipole motion from any source, including injection transients and beam-beam disturbances as well as coupled-bunch instabilities

V. SUMMARY AND OUTLOOK

The construction of a high-luminosity asymmetric B factory provides excellent scientific opportunities, combining first-rate particle physics incentives (to study the origins of *CP* violation) with equally exciting challenges in both the accelerator physics and accelerator technology areas. Challenges in accelerator physics include:

- development of lattices to collide and then cleanly separate two unequal energy beams
- achieving high luminosity in asymmetric beam-beam collisions
- designing effective masking techniques to protect the detector

Challenges in accelerator technology include:

- designing vacuum systems capable of handling large thermal loads, providing adequate pumping speed, and having acceptable impedance characteristics
- designing RF systems capable of handling high beam power and providing greatly reduced HOM impedance
- designing wideband bunch-by-bunch feedback systems

Effective approaches to all of these challenges have been identified and R&D activities are being vigorously pursued at many laboratories to optimize designs and finalize design choices. Extensive simulation studies of accelerator physics issues are also being carried out to better understand the beam-beam interaction and beam instabilities.

It is recognized by the various B factory design groups that making a large jump in luminosity will not be an easy task. Perhaps the most important ingredient in ensuring the success of a B factory will be to constantly remember to treat these challenges with proper respect.

ACKNOWLEDGMENTS

I would like to thank my many "co-conspirators" in B factory design, not only at LBL, SLAC, Caltech, and LLNL, but at CERN, Cornell, DESY, KEK, Novosibirsk, and PSI, for numerous profitable interactions. I would especially like to acknowledge my colleague Swapan Chattopadhyay, who dragged me kicking and screaming into this exciting endeavor.

REFERENCES

[1] K. Balewski, et al., "Study of an Asymmetric B-Factory," *Beam Dynamics Issues of High-Luminosity Asymmetric Collider Rings*, in AIP Conf. Proc. 214, Berkeley, CA, August 1990, p. 565-574.

[2] "Accelerator Design of a KEK B Factory," ed. by S. Kurokawa et al., KEK Report 90-24, March 1991.

[3] "Feasibility Study for a B-Meson Factory in the CERN ISR Tunnel," ed. by T. Nakada, CERN 90-02, PSI PR-90-08, March 1990.

[4] K. Berkelman, et al., "CESR-B: Conceptual Design for a B Factory Based on CESR," CLNS 91-1050, January 1991.

[5] "An Asymmetric B Factory Based on PEP," Conceptual Design Report, LBL PUB-5303, SLAC-372, CALT-68-1715, UCRL-ID-106426, UC-IIRPA-91-01, February 1991.

[6] A. Zholents, "Novosibirsk B-Factory," *Beam Dynamics Issues of High-Luminosity Asymmetric Collider Rings*, in AIP Conf. Proc. 214, Berkeley, CA, August 1990, pp. 592-593.

[7] P. Grosse Wiesmann, et al., "A Linac-on-Ring Collider B-Factory Study," *Beam Dynamics Issues of High-Luminosity Asymmetric Collider Rings*, in AIP Conf. Proc. 214, Berkeley, CA, August 1990, p. 602-615.

[8] "The Physics Program of a High-Luminosity Asymmetric B Factory at SLAC," ed. by D. Hitlin, SLAC-353, LBL-27856, CALT-68-1588, October 1989.

[9] H. DeStaebler, "Interaction Region Considerations," *Beam Dynamics Issues of High-Luminosity Asymmetric Collider Rings*, in AIP Conf. Proc. 214, Berkeley, CA August 1990, p. 59-80.

[10] D. Rice, "Beam-Beam Interaction: Experimental," *Beam Dynamics Issues of High-Luminosity Asymmetric Collider Rings*, in AIP Conf. Proc. 214, Berkeley, CA August 1990, p. 219-234.

[11] Y.H. Chin, "Symmetrization of the Beam-Beam Interaction in an Asymmetric Collider," *Beam Dynamics Issues of High-Luminosity Asymmetric Collider Rings*, in AIP Conf. Proc. 214, Berkeley, CA August 1990, p. 424-433.

[12] S. Krishnagopal and R. Siemann, Phys. Rev. D **41**, 1741 (1990).

[13] K. Oide and K. Yokoya, Phys. Rev. A **40**, 315 (1989).

[14] F. Pedersen, "Feedback Systems," *Beam Dynamics Issues of High-Luminosity Asymmetric Collider Rings*, in AIP Conf. Proc. 214, Berkeley, CA, August 1990, p. 246-269.