14/10-22-92 JSO

LBL-31308
UC-350

Lawrence Berkeley Laboratory
UNIVERSITY OF CALIFORNIA

ENERGY & ENVIRONMENT DIVISION

Office Equipment Energy Use and Trends

M.A. Piette, J.H. Eto, and J.P. Harris

September 1991

ENERGY & ENVIRONMENT
DIVISION

Prepared for the U.S. Department of Energy under Contract Number DE-AC03-76SF00098

DISTRIBUTION OF THIS DOCUMENT IS UNLIMITED

DISCLAIMER

Neither the United States Department of Energy (DOE) nor any agency thereof, nor The Regents of the University of California (The Regents), nor the California Institute for Energy Efficiency (CIEE), nor any of CIEE's sponsors or supporters (including California electric and gas utilities), nor any of these organizations' employees, make any warranty, express or implied, or assume any legal liability or responsibility for the accuracy, completeness, or usefulness of any information, apparatus, product, or process disclosed, or represent that its use would not infringe privately owned rights. Reference herein to any specific commercial product, process, or service by its trade name, trademark, manufacturer, or otherwise, does not necessarily constitute or imply its endorsement, recommendation, or favoring by DOE or any agency thereof, or The Regents, or CIEE, or any of CIEE's sponsors or supporters. The views and opinions of authors expressed herein do not necessarily state or reflect those of DOE or of any agency thereof, of The Regents, of CIEE, or any of CIEE's sponsors or supporters, and the names of any such organizations or their employees shall not be used for advertising or product endorsement purposes.

This report has been reproduced directly
from the best available copy.

Available to DOE and DOE Contractors
from the Office of Scientific and Technical Information
P.O. Box 62, Oak Ridge, TN 37831
Prices available from (615) 576-8401, FTS 626-8401

Available to the public from the
National Technical Information Service
U.S. Department of Commerce
5285 Port Royal Road, Springfield, VA 22161

Lawrence Berkeley Laboratory is an equal opportunity employer.

LBL--31308

DE93 001528

OFFICE EQUIPMENT ENERGY USE AND TRENDS

M. A. Piette, J.H. Eto, and J.P. Harris

Energy and Environment Division
Lawrence Berkeley Laboratory
One Cyclotron Road
Berkeley, CA 94720

September 1991

This project was sponsored by the California Institute of Energy Efficiency with co-funding from the Pacific Gas and Electric Company. Support was also provided by the Assistant Secretary for Conservation and Renewable Energy, Office of Building and Community Systems, Building Systems Division of the U.S. Department of Energy under Contract No. DE-AC03-76SF00098.

DISTRIBUTION OF THIS DOCUMENT IS UNLIMITED

MASTER

Table of Contents

EXECUTIVE SUMMARY ..... 1.

I. INTRODUCTION ..... 3.

II. LITERATURE REVIEW ..... 4.

A. Aggregate Estimates ..... 4.

B. Survey and Monitoring Studies ..... 4.

B.1. Pratt et al. (1990) ..... 4.

B.2. BR Associates (1989) ..... 6.

B.3. California Energy Commission (CEC88 and CEC89) ..... 6.

B.4. Consolidated Edison (CON ED) ..... 7.

B.5. Sacramento Municipal Utility District (SMUD) ..... 7.

C. Energy-Saving Opportunities ..... 7.

D. Industry Sales Projections ..... 8.

III. CALCULATION OF ENERGY USE ..... 8.

A. Office Equipment Nameplate Power Densities ..... 8.

B. Energy-Use Intensities ..... 9.

C. HVAC Interactions ..... 10.

IV. EQUIPMENT DEFINITIONS ..... 10.

A. Original PG&E Spreadsheet Definitions ..... 10.

B. Comparison of Definitions and LBL Categories ..... 11.

C. The Need for Improved Definitions ..... 12.

V. DATA DEVELOPMENT ..... 13.

A. Analysis and Comparison of PG&E and SMUD On-Site Survey Data ..... 13.

A.1. Creation of Component Categories for PG&E Data ..... 14.

A.2. Nameplate Power Ratings from PG&E Data ..... 14.

A.3. Comparison of Equipment Saturations From PG&E and SMUD Data ..... 15.

A.4. Derivation of Equipment Saturations by Building Type ..... 16.

B. Selection of Spreadsheet Inputs ..... 17.

B.1. Nameplate Power and Equipment Saturations ..... 17.

B.2. Operating Characteristics ..... 19.

C. Estimating Past and Future Office Equipment Data ..... 20.

C.1. Past and Future Nameplate Power Ratings ..... 20.

C.2. Past and Future Equipment Saturations ..... 20.

VI. SPREADSHEET PRESENTATION ..... 21.

A. Component Energy Use Calculations ..... 22.

A.1. Component Calculation Inputs ..... 22.

A.2. Component Calculation Output ..... 22.

B. Total Energy Use of Office Equipment for Small Offices ..... 23.

C. Office Equipment EUIs for All Building Types and Total Sectoral Energy Use ..... 23.

VII. RESULTS AND DISCUSSION ..... 23.

A. Office Equipment Nameplate Power Densities and Energy-Use Intensities ..... 23.

B. Office Equipment Energy-Use Intensities for All Buildings ..... 24.

C. Results and Comparisons with Past Studies ..... 25.

C.1. Nameplate Power Densities and Energy Use in Offices ..... 25.

C.2. Total Commercial Sector Energy Use ..... 25.

VIII. RECOMMENDATIONS FOR FUTURE WORK ..... 26.

A. Incorporate New Data Sets ..... 26.

B. Scenario Analysis ..... 27.

C. Enhance Model Design ..... 27.

D. Complementary Research Beyond the Spreadsheet Model ..... 28.

IX. ACKNOWLEDGEMENTS ..... 28.

X. REFERENCES ..... 28.

XI. APPENDICES ..... 47.

XI.A. Equipment Definitions for PG&E On-Site Surveys ..... 47.

XI.B. Spreadsheet Print-Out ..... 50.

TABLES AND FIGURES

Table 1. Comparison of PG&E equipment definitions with other studies, and LBL categories.

Table 2. Sources of data on office equipment for data development and comparisons.

Table 3. Component nameplate power from PG&E on-site surveys and ELCAP.

Table 4.A. Equipment saturations for all buildings.

Table 4.B. Equipment saturations compared to small offices.

Table 5. Comparison of nameplate power and saturations for small offices.

Table 6. Comparison of operating data for small offices.

Table 7. Comparison of nameplate power density (W/ft^2) data for large offices from several studies.

Table 8. Comparison of energy-use intensity data (kWh/ft^2-year) data for large offices from several studies.

Table 9. Comparison of nameplate power density (W/ft^2) data for small offices from several studies.

Table 10. Comparison of energy-use intensity data (kWh/ft^2-year) data for small offices from several studies.

Figure 1. Average Annual Office Equipment Nameplate Power Rating.

Figure 2. Annual Growth in Office Equipment Saturations.

Figure 3. Calculation of Energy Use for Each Equipment Type.

Figure 4. Calculation of Office Equipment Energy Use for Small Office Prototype.

Figure 5. Calculation of Office Equipment Energy Use for Eleven Building Types and Total Commercial Sector GWh.

Figure 6. Annual Office Equipment Nameplate Power Density (NPD) for Office Buildings.

Figure 7. Annual Office Equipment Energy-Use Intensity (EUI) for Office Buildings.

Figure 8. Annual Office Equipment Energy-Use Intensity (EUI) by Building Type.

Figure 9. Total Annual Commercial Sector Office Equipment Energy Use by Building Type for the PG&E Service Territory.

Figure 10. Comparison of Office Equipment Energy Use Intensities in Large Offices: LBL, PG&E, and CEC Estimates.

Figure 11. Total Annual Commercial Sector Office Equipment Energy Use for the PG&E Service Territory: Comparison of LBL, PG&E, and CEC Estimates.

EXECUTIVE SUMMARY

Office information technologies are using an increasing amount of energy in commercial buildings. During recent forecasting hearings in California, the office equipment end use has been a major source of differences among forecasts of commercial sector energy use. Not only are there major differences in forecasted load growth resulting from the energy use of office equipment, but there are also differences in interpretations of historical and base-year estimates. Understanding office equipment energy use is particularly important because office equipment is widely believed to be the fastest growing electrical end use in the fastest growing sector.

This report describes the development and application of a spreadsheet to estimate current and future energy use by office equipment. We define the term "office equipment" to mean information processing technologies used in buildings. The seven categories of office equipment relate to categories found in our analysis of utility surveys and industry sales reports. These seven categories of equipment are examined for eleven types of commercial buildings.

It is useful to consider office equipment as a unique energy end use, like lighting or ventilation. The energy use of office equipment can be represented in a simplified expression that includes nameplate power rating, average energy use as a percent of the nameplate power, hours of use, and diversity of use. The primary source of data for the nameplate power ratings and hours of use for each types of equipment was the Pacific Gas and Electric Company's 1985 on-site survey, conducted for 855 commercial buildings, although several other sources of data are examined. The primary source of data on the average energy use as a percent of the nameplate power is a study by Norford et al. (1990). Not all of the data necessary for the modeling are available from measured sources. Diversity data are based on limited component measurements and engineering estimates. The number of units of each type of equipment are represented as equipment saturations. Starting saturation data are based on the Sacramento Municipal Utility District's 1988 on-site survey, conducted for 314 commercial buildings. Using 1988 as a base year, past and future equipment saturations estimates were derived from historical and projected sales data from CBEMA (Computer Business and Manufacturer's Association).

Equipment saturations, such as the number of devices per floor area, are combined with the energy use data to estimate equipment Energy-Use Intensities (EUI, kWh/ft^2-year) and Nameplate Power Densities (NPD, W/ft^2). The EUI represent only the direct energy use of the office equipment. We have not included interactive energy use by heating, cooling, or ventilation systems in this report. An NPD is similar to a lighting power density, but differs in that power supply ratings are often much larger than actual power draw of the component.

Developing equipment definitions is a challenge because it is difficult to describe an "average" component for technologies that are rapidly changing. For example, there is no clear distinction between large and small computing systems. Some mini-computers serving multiple users draw as much power as large, color-display, personal computers. We have seen, and will continue to see new products rapidly penetrate the office equipment market. Fax machines are an example of a technology that was nearly non-existent at the beginning of our forecasting horizon (1983), but has shown the fastest growth of all the equipment we have examined. Other

changes, such as integrated systems like copier-printer-fax machines, will complicate our forecasts. We believe that the definitions described in this report will need to be reviewed and updated repeatedly during the forecast horizon (the year 2011).

We estimate that the energy used by office equipment increased faster in the 1980s than we (and others) have forecasted for the 1990s and beyond. The energy use of office equipment in office buildings is dominated by mainframe and mini-computer energy use during the 1990s, with personal computers representing a growing fraction of energy use in the 1990s and beyond. Energy use by printers is also expected to increase quickly. Our estimates of total average energy use by office equipment in office buildings begins at 1.0 kWh/ft^2-year for 1983, increasing to 4.2 kWh/ft^2-year in 2011. Future estimates of total office equipment nameplate power densities show a different mix of equipment by the year 2000, with personal computers dominating the installed load, followed by printers, copiers, and mainframes and mini-computers.

Based on limited saturation data for other building types, the hospitals are the second most intensive in office equipment energy use, followed by schools and colleges. Although our estimates of office building energy-use intensities are lower than those predicted in other comparison studies, our total commercial sector forecast falls within the range predicted by other studies. We find that the fraction of total commercial sector electricity used for office equipment appears to be growing, ranging from 5.8% in 1989 to 10.9% by 2011.

We have presented a model that we believe will help energy analysts evaluate current trends in office equipment load growth, but caution potential users that many of the data needed as inputs are based largely on engineering estimates because measured energy use operating characteristics data are scarce. In developing our spreadsheet we have assigned each data input a confidence level rating to highlight the issue of data quality.

I. INTRODUCTION

The objectives of this project are to improve our understanding of patterns of energy use by electronic office equipment and to develop data for the electricity demand forecasting models used in California. We define the term "office equipment" to describe information technologies, such as computers, printers, and copiers, found in office environments. We exclude other "non-office information equipment" such as elevators, refrigerators, cooking appliances, task lighting, and vending machines.

The primary task of the project is to revise a spreadsheet developed by the Pacific Gas and Electric Company (PG&E) to forecast energy use by office equipment. A literature review and analysis of survey data were conducted with this objective in mind. A final version of the spreadsheet is discussed in this report in Sections VI and VII. The structure, data inputs, and output parameters are discussed below. We provide a comparison of the results of our analysis with results from previous studies.

The report describes our spreadsheet development (Section V). We compare equipment definitions from past studies and associated energy consumption data in order to develop a consistent set of definitions for the spreadsheet (Sections IV and VII). One important source of data is detailed on-site surveys for 855 commercial buildings sponsored by PG&E and the California Energy Commission (CEC) in 1985. A second key source is more recent on-site surveys from the Sacramento Municipal Utility District (SMUD) conducted in 1988, used to estimate equipment saturations for 1988. Both of these surveys were part of the CEC's efforts to collect end-use data to support energy conservation and forecasting analysis. Our review of these data focuses on nameplate power ratings, equipment saturations, and operating schedules. Using 1988 as a base year, past and future equipment saturations estimates were derived from historical and projected sales data from CBEMA (Computer Business and Manufacturer's Association).

Our analysis focuses on the large and small office building types, but includes results for all eleven building types used by both PG&E and the CEC. This report compares the spreadsheet output to the PG&E's original forecast, considering both building level energy intensities and aggregate growth in the office equipment end use.

Although we have presented a revised spreadsheet that we believe will greatly help energy analysts evaluate current trends in office equipment load growth, we caution potential users that that many of the data needed as inputs in the spreadsheet are based largely on engineering estimates. Measured energy use operating characteristics data are scarce! In developing the spreadsheet we have assigned each data input with a confidence level rating to highlight the issue of data quality.

The format of this report is as follows: we begin with a brief review of past studies that we draw upon in this project (Section II). Section III describes the basic equations used in the spreadsheet to characterize equipment energy use. Equipment definitions are the subject of Section IV, discussing those used in past studies, the final definitions for the spreadsheet, and the problems associated with defining general categories for a set of rapidly changing technologies. Our analysis of survey data, component monitoring, and industry trend data developed for input to the spreadsheet is discussed in Section V. The spreadsheet design, including the input and output parameters, is presented in Section VI. Output from our application of the spreadsheet model is presented and compared to results from previous studies in Section VII. Recommendations for future work, such as the need for improved survey and component monitoring data and continual tracking of market trends, are described in Section VIII. Appendix A includes a list of

the equipment definitions used to assign PG&E's on-site survey data to the seven categories (described in Section V). Appendix B is a print-out of the spreadsheet model.

II. LITERATURE REVIEW

The study of the energy use of office equipment is relatively new, and our understanding of this end-use is limited. Although the energy use of office equipment has been the subject of a number of recent studies, there are significant gaps in the information needed to characterize the aggregate past, current, and future energy use of office equipment. For example, we have few data describing the number of personal computers (PCs), printers, or copiers in commercial buildings. Similarly, there have been very few measurements of the energy use of these devices. (We use the terms "component" and "equipment type" and "device" interchangeably.)

Past research on the energy-use characteristics of office equipment can be categorized into three general classes: aggregate estimates, survey and monitoring studies, and opportunities for energy savings. In this section we provide an overview of past research and identify specific information sources used in our analysis. Industry sales projections are also important for a study of forecasting office equipment load growth. Our key source of future sales data is described below.

II.A. Aggregate Estimates

Many of the earliest studies on office equipment sought to estimate the aggregate U.S. energy consumption of office equipment and information technology. Examples of such studies are Roach (1988) and Harris et al. (1988). Both of these reports contain component data, such as the power rating for various pieces of equipment, which we have examined for comparison with data from other studies. The study by Harris et al. is unique in that the component data include both nameplate ratings and actual electrical power measurements for a limited number of components. These measurements show that the average amount of energy used by personal computers and other office equipment is much less than the nameplate power rating. Our incorporation of this finding sets our work apart from many past efforts. An updated version of the Harris et al. study, including additional component measurements, was published in 1990 (Norford et al.). The studies by Harris and Norford also review energy saving opportunities.

II. B. Survey and Monitoring Studies

Another class of research is based on equipment surveys, and end-use or component metering. The two studies we have drawn most heavily upon are by Pratt et al. (1990) and by Baker Reiter Associates (1989). A description of these two studies is provided here, followed by a summary of several other referenced studies.

II.B.1. Pratt et al. (1990)

The Bonneville Power Administration operates a data collection program to provide information to support demand-side planning, load forecasting, and demand-side program development and delivery. Part of this program is the End-Use Load and Consumer Assessment Program (ELCAP), conducted by the Pacific Northwest Laboratory (Pratt et al., 1990). For ELCAP, hourly end-use data were collected for 126 commercial buildings. A detailed equipment audit was conducted for each building in 1986 at the start of data collection activities. The report on

equipment loads covers all miscellaneous commercial equipment except heating, ventilation, air-conditioning equipment, and central lighting systems.

The report examines 17 types of equipment, including food preparation, refrigeration, hot water, task lighting, computing, and office equipment (excluding computers). Eleven building types are included in the study. Four properties of each equipment category were determined for each building type. Using the terminology from the ELCAP report (which slightly differs from the terminology used in our spreadsheet design) the properties for each category of equipment are:

- Device density -- the average number of devices for each category per unit of floorspace
- Capacity density -- the total rated power per unit of floorspace
- Utilization factor -- the product of the device's average operating time (the fraction of the total hours in the year that the equipment operates), and its average load factor (the fraction of the rated capacity it draws when operating)
- Estimated electricity use -- the product of the capacity density and the utilization factor

In Pratt et al. (1990) two general categories of office equipment are aggregated from the equipment load survey categories for all of the buildings: office equipment and computing equipment. The computing equipment category was further disaggregated for large and small offices into large and small computing. This disaggregation was intended to separate large multi-user systems from desk-top, personal systems, and was based on component wattage. For example, printers with nameplate power under 1 kW were considered small computers, and those with nameplate power over 1 kW were considered large computers. Monitors, or Video Display Terminals (VDTs), were divided between between large and small computers based on whether their nameplate power was above or below 200 W. (This technique, to assign equipment to either single user systems or larger multiuser systems, should be explored further to determine the distribution of nameplate power ratings for various types of equipment to understand consequences of the dividing lines.)

The ELCAP equipment surveys recorded nameplate capacity ratings for devices over 1 kW. Equipment rated at less than 1 kW was only recorded if numerous devices were present and the aggregate power of the components exceeded 1 kW. This record keeping may introduce a bias in the sample toward larger average nameplate power per unit. For example, if a small office has three Macintosh SE computers at 100 W each, they will not be represented in the survey. However, if the computers were IBM XTs, at 440 W each, they would be included. The 1 kW cut-off may also result in lower equipment power densities per unit floor area because some units may not be accounted for in the survey, which is especially significant for small buildings. In the ELCAP surveys, individual pieces of equipment were traced to circuits and specific data logger channels. The amount of electricity consumed by each piece of equipment was estimated from multi-variant regressions of the components and the equipment energy use in each building.

We have used the equipment definitions, power ratings, saturations, utilization factors, and energy use intensities from the ELCAP study. In addition to the main summary report (Pratt et al., 1990) we present data from the ELCAP Connected Load Survey Data Summaries (Pratt, 1991). In our analysis we separately consider operating hours and average energy use as fractions of the nameplate rating; Pratt et al. combine these two values to form a single "utilization factor".

II.B.2. BR Associates (1989)

The Bonneville Power Administration contracted with Baker Reiter Associates to study plug loads in the commercial sector. The goal of the study was to quantify the magnitude and rate of growth of electricity consumption by miscellaneous equipment. The study had objectives and a methodology similar to our study. The report examined 17 types of equipment, including food preparation, refrigeration, hot water, task lighting, computing, and office equipment. The following steps describe the data developed for each building type:

1. Identify median equipment power densities (W/ft^2) for each equipment category -- based primarily on ELCAP data.
2. Select a utilization factor for each equipment category -- based on engineering estimates and ELCAP data.
3. Estimate consumption for each equipment category, considering only buildings that have the equipment in question.
4. Develop a penetration rate to calculate consumption across all buildings -- based on the percentage of ELCAP buildings in which the equipment category was present.
5. Revise ELCAP-based estimates to incorporate information from literature search, interviews and input from experts.

Other sources of information used in the BR study include literature searches and interviews with vendors, engineers, market analysts, and expert reviewers. The ten equipment categories were similar, though not identical to those used in Pratt et al. The two of interest to this study are office equipment (cash registers, copiers, typewriters, adding machines, filing equipment, etc.), and computer equipment (computers, printers, terminals, etc.). Spreadsheets were developed for each end-use category. Energy consumption estimates for 1986 were compiled using ELCAP and the 1985 PG&E on-site survey data (based on 855 buildings, which we also examined). Confidence levels were assigned to the equipment end-use estimates. Eight building types were examined. We have compiled the equipment definitions, power ratings, saturations, hours of use, and energy use intensities from this report to compare with results from other studies, and the spreadsheet model we have developed.

II.B.3. California Energy Commission (CEC88 and CEC89)

The data in CEC88 were based on a study of California on-site survey data from 1,700 commercial buildings (Nguyen et al., 1988.) About half of the surveyed buildings are the same PG&E data we have examined, discussed below. We use the equipment power densities and energy use intensities from this study, and we examine the component definitions in our comparisons.

We have extended the work in CEC88 in a number of ways. First, our equipment categories provide a more detailed look at the office equipment, and exclude other miscellaneous equipment such as vertical transport and food processing. Second, we have looked at the data twice, once to examine all of the equipment data independent from their use in a particular building, and the second time to review office equipment data within individual buildings.

The data from CEC88 were revised to create CEC89, which is based on CEC testimony reviewing its own estimates of energy-use intensities, growth rates, and other data on miscellaneous office equipment, reported in Hamzawi et al., 1989 (CEC89). We have used the data on total office equipment energy-use intensities (kWh/ft^2-year) and office equipment power

densities (W/ft^2) for large and small offices in our comparisons below.

II.B.4. Consolidated Edison (CON ED)

Consolidated Edison of New York contracted with Xenergy, Inc. to examine the load growth of electronic equipment (Michaels et al., 1990). A unique characteristic of the study is that 165 buildings audited in 1985 were re-visited in 1988 to track the change in office equipment. The study emphasized equipment power densities and the contribution of office equipment to peak summer load, rather than energy use. We have examined the equipment definitions from this study, but since the data were estimates of coincident peak demands we have not drawn upon them in our data comparisons.

II.B.5. Sacramento Municipal Utility District (SMUD)

In preparing forecasts of electricity the CEC and SMUD make use of highly detailed end-use models. The end-use models are based on building type submodels that use extensive supporting data. This report, containing equipment saturations for thirteen types of office equipment, became available late in our project's timeline (ADM, 1990). The survey instrument used in the SMUD on-site surveys was a variation of a format used in the Pacific Northwest (Pacific Northwest Non-Residential Survey, known as PNNonRes), which is slightly more detailed than the survey instrument used for the 1985 PG&E on-site surveys. The office equipment codes were based on the ELCAP codes. Fortunately the equipment definitions used in the SMUD survey are very similar to those we independently developed before the SMUD data were available. Consequently, we have used the SMUD data to derive equipment saturations for 1988, for all building types. The report by ADM presents only a limited review of the data compiled for SMUD, focusing on saturations and characteristics data. Nameplate power ratings are not included in the ADM report.

II.C. Energy-Saving Opportunities

A third type of study emphasizes the energy-saving opportunities within office equipment technologies. For example, energy-efficient office equipment uses "smart" power management, which includes features such as controls that allow certain components to "power down" during stand-by operation.

The most notable of these studies is the recent report from the Rocky Mountain Institute (Lovins, A. and Heede. H., 1990). This report reviews the physical and technical characteristics of office equipment for the purpose of assessing energy-efficiency improvements. We have used it to gain further insight into the physical characteristics of office equipment. It is the most complete report to date on the entire subject of office equipment, and it contains a general review of other background studies.

In one of the first case study efforts designed to identify energy-saving opportunities in an existing office, Brown Vence Associates conducted a component metering study of the PG&E Sunset Building in San Ramon, California (Martin, 1991). We have drawn upon preliminary results regarding the diversity of equipment operation (but not the efficiency improvements) from this project, which is currently in progress.

II.D. Industry Sales Projections

Industry projections of future sales are the primary source of data available for forecasting trends in the office equipment market. These projections help indicate changes in the composition of office equipment, such as the growth in personal computers relative to mainframes and mini-computers, or the boom in fax machines.

One of the most complete source of information is the annual report on industry marketing statistics from the Computer and Business Equipment Manufacturers Association (CBEMA, 1991). This trade association compiles historical sales data and projects future sales for several classes of hardware. The hardware classes used by CBEMA are more detailed than the component definitions used in this report. The 1991 report forecasts economic trends and domestic demand through the year 2000. Our use of the sales projections data is described below in Section V.C.1.

III. CALCULATION OF ENERGY USE

In this section we discuss the parameters that form the technical basis for our revised spreadsheet. We also compare these input and output parameters to those used by others. As in the original PG&E spreadsheet and the BR study, we use a "bottom-up" approach, combining individual equipment characteristics data with assumptions about operating characteristics to derive equipment power densities and energy intensities. Given the energy intensity for office equipment for each building type, aggregate sectoral energy use can be derived using floorspace projections.

III.A. Office Equipment Nameplate Power Densities

The first step in evaluating energy use is to calculate a Nameplate Power Density (NPD), which is similar to a lighting power density, and is expressed in watts per square foot. The NPD is based on average rated nameplate power and saturation, which is expressed as the number of devices per square foot. The nameplate power (N) is based on the maximum electric load for which the power supply is sized. In calculating the energy-use intensity, we introduce a factor to account for the difference between nameplate power and average power drawn. The NPD does not include this factor because it is a valuable statistic to know as well. The NPD can be directly computed from walk-through surveys of nameplate wattage, and is therefore the starting point of an energy estimate.

The original PG&E spreadsheet is based on a hypothetical prototype building of a certain area; saturation data were expressed as the number of units of each type of equipment per building. We modified this to the units per floor area. We explored an alternative approach for deriving equipment saturations using occupant density data and the number of people served by each component. This appeared to be more straightforward than estimating saturations from the number of units per floor area because -- unlike cooling or lighting -- office equipment saturation is directly linked to the activity within a building and therefore linked to the number of office workers (or their equivalent, e.g. retail clerks in an automated retail outlet).

We did not adopt this approach in the final version of the spreadsheet because the lack of occupant density data available at the time of project completion left us unable to verify the saturations derived from the SMUD data. However, the spreadsheet does include output describing the number of people per device.

We have used the following relationship for the NPD (in W/ft^2):

$$NPD_j = \sum_{i=1}^{n} N_{ij} \; S_{ij} \; / \; 1000$$

where

NPD =	Nameplate Power Density for building j (W/ft^2)
i =	index for office information technology equipment type
j =	index for building type
N =	Nameplate capacity of equipment type i (W/unit)
S =	Saturation of equipment type i (# of units/kft^2)

III.B. Energy-Use Intensities

To extend the calculation of the equipment power density to the annual energy use requires data on how each component is used over time. We use three parameters to characterize the operating data. The first is the average consumption factor (A), which is the average load when "on" as a percentage of the rated nameplate capacity (Norford et al., 1990). This is needed because rated power does not reflect how much power a system will draw on average. Power supplies are often oversized if the equipment, such as a computer, can support operation of add-on equipment. On the other hand, a computer may be "fully loaded", using its full computing capacity, and consume near its rated load. Very few data are available on this factor, which ideally should be based on direct measurements.

The second factor is the annual operating hours (H). For most pieces of equipment this represents the number of hours a device is "on". For many of the components, such as PCs or Video Display Terminals (VDTs, monitor plus keyboard) operation is generally bi-modal, either "on" or "off". However, devices such as copiers, have several modes of operation: plug-in, stand-by, warm-up, and copying. A more sophisticated model might consider the average number of hours at each mode, but data to develop such a model are lacking.

We have added a third parameter, the diversity of operation (D), to account for the fact that not all office equipment are always "on" during a typical operating schedule. We define diversity as *the percent of time equipment is on during scheduled operating hours,* a value between zero and one. Although there may be dozens of PCs in an office building, only a certain fraction will be on at once because users are not in their offices every hour of the day. As this fraction decreases, that is, as the number of idle units increase relative to the total stock, the diversity parameter decreases, and the average energy use intensity decreases. (Our use of the term "diversity" may differ from other studies where an increase in diversity causes a decrease in energy use.)

Very few data are available to describe diversity. We have used some preliminary data from a case study at PG&E (Martin, 1991). It is likely that equipment diversities may be dropping as the saturation of information technologies increases. When PCs are shared they service multiple users and are therefore probably "on" more hours. With less shared equipment a single PC will likely have a lower diversity factor. Diversity data will also help show the effect of "smart" power management. Similar to an occupancy sensor shutting off lights when a room is vacant, smart power management could shut down parts of a computer when it has not been operated for a certain time. When we look at future enhancements of our spreadsheet model, diversity may also help model a Local Area Network (LAN), in which a laser printer linked to a

PC network may operate with a higher diversity factor than the PCs it is serving.

The energy-use intensity can be expressed as;

$$EUI_j = \sum_{i=1}^{n} N_{ij}\ S_{ij}\ A_{ij}\ H_{ij}\ D_{ij} / 10^6$$

where

EUI =	Energy-Use Intensity for building j (kWh/ft^2-year)
i =	index for office information technology equipment type
j =	index for building type
N =	Nameplate capacity of equipment type i (W/unit)
S =	Saturation of equipment type i (# of units/kft^2)
A =	Average power as a % of rated capacity for equipment type i (%)
H =	Hours of operation for equipment type i (hour/year)
D =	Diversity of on-time for equipment type i (%)

In the original PG&E spreadsheet design each input could change over time. We have simplified the input data to allow only the equipment saturation (S) and nameplate wattage (N) to change in time. A, H, and D are held fixed. In the future we may find it desirable to modify the spreadsheet so that other parameters can also change in time if data to support these changes become available.

III.C. HVAC Interactions

The energy-use calculation described above represents the electricity used directly by office equipment. It does not reflect any impact of the equipment with heating or cooling energy use, which has not been addressed in this study. In most commercial buildings the excess heat generated by the equipment increases cooling loads. However, the interaction between office equipment and heating, ventilation and air-conditioning (HVAC) energy use is a complex problem since it varies with the type of HVAC equipment. As we show in the results below, most of the computer equipment loads in the past were from large computers. Large, mainframe computers are usually located in rooms with dedicated space-conditioning. The increase in desktop computing and printing has brought the excess heat generated from the machines into the office space. See Norford et al. (1990) and Lovins and Heede (1990) for further discussion of this issue.

IV. EQUIPMENT DEFINITIONS

In this section we describe the equipment definitions used by PG&E in the original spreadsheet and compare them to those used in other studies. We then present the definitions developed for use in our revised spreadsheet. We also comment on the difficulties associated with using fixed definitions in view of the fast-paced change in office technologies.

IV.A. Original PG&E Spreadsheet Definitions

Limited documentation was available from PG&E to describe the development of their original definitions. Below is a brief definition of each category, including comments on our interpretation, and the four-letter abbreviation used in Table 1:

- *Mainframe (MAIN)* -- large, multi-user computing system, not including Video Display Terminals (VDTs)
- *Minicomputer (MINI)* -- small, multi-user computing systems, not including VDTs
- *Personal Computers (PC)* -- full, single user, desk-top system: VDT, disk drive, power supply, etc.
- *Dot Matrix Printer (DOTM)* -- we assume this includes other low power printers such as inkjets and daisy wheel printers
- *Laser Printer (LASR) -- laser technology printers*
- *Copiers (COPY)* -- range from large industrial to desk-top machines
- *Fax (FAX)* -- we assume non-laser and laser facsimile machines, plus telephone fax integrated machines
- *Special Equipment (SPCE)* -- PG&E's notes list the following items for offices (which differ for other building types): laboratory equipment, calculator, shredders, vending machines, water coolers, vacuum cleaners, and shop. We have also assumed typewriters and VDTs were included in this category
- *Audio Visual (AV)* -- Televisions, slide and overhead projectors, VCRs, etc.

The original PG&E spreadsheet also contained five categories of equipment that we have excluded from the office equipment end-use, but are often included in "miscellaneous equipment". These include auxiliary heat (plug-in task heaters), auxiliary cooling (unclear what this consisted of), auxiliary lighting (task lighting), kitchen appliances (refrigerators, coffee pots, etc.), and vertical transport (elevators and escalators). Our comparisons below of the output from the original PG&E spreadsheet with our revised spreadsheet excluded these five equipment categories because they are outside the scope of this study.

IV.B. Comparison of Definitions and LBL Categories

PG&E's equipment definitions are more detailed than those used in the other studies reviewed in Section II.B. Table 1 compares the PG&E equipment definitions to those used in the following five studies: CEC88, Pratt et al., BR, CON ED, and SMUD, and to our final definitions described below. This table illustrates the broad range in definitions used in previous studies. In many cases the studies reported two levels of aggregation. For example, the ELCAP survey has 24 primary categories of office equipment, the data were aggregated for most of the analysis. The two subcategories common to most of the studies are 1) computers and printers and, 2) miscellaneous other office equipment (copiers, fax, typewriters, etc.). The NPDs and EUIs for these two subcategories are compared below in Section VII.C.

The table also shows the seven categories we have used in the revised spreadsheet. These are:

1. *Mainframe and Mini-Computers (M&MC)* -- includes large, multi-user mainframes and mini-computers, including central processing units, and large disk and tape drives.
2. *Personal Computers (PC)* -- includes full, single user, desk-top system: VDT, keyboard, disk drive, power supply, word processors, etc.
3. *Printer (PRNT)* -- includes all types, large line printers, dot matrix, daisy wheel, laser, inkjet, etc.

4. *Copiers (COPY)* -- photocopy machines
5. *Fax (FAX)* -- laser and non-laser facsimile machines
6. *VDTs (VDT)* -- includes video display terminals (both monochrome and color monitors), and keyboards.
7. *Typewriters (TYPEWR)* -- electric machines only.

Our categories follow the PG&E categories with four exceptions. First, we aggregated mainframes and mini-computers because of the difficulty in separating these two systems. Second, we combined laser printers with dot-matrix printers into one category of printers. We found no laser printers in 1986. We can account for the increased saturation of these systems and the associated increased EUIs by increasing the average nameplate power. Third and fourth, we assigned VDTs and typewriters to separate categories. These components were among the most clearly identifiable in the survey data and are useful for characterizing the links between people and components.

We have not included a "miscellaneous other office equipment", category because the data available at this time are insufficient to adequately characterize such a category. However, this may be a useful addition in the future. The SMUD study reported adding machines and microfiche readers separately. We have not yet reviewed the power ratings from the SMUD survey data associated with these machines because they were not yet available, but we suspect they are the lowest power machines among the categories examined so far.

IV.C. The Need for Improved Definitions

The definitions developed for use in this study reflect a best effort given available data, and were one of the most difficult tasks of the project. They should not be considered final. In this section we describe their limitations.

One challenge was to describe an "average" component despite the absence of sufficiently detailed data about equipment characteristics in the building stock. The most difficult and significant of these challenges is the division between computing systems. At one end of the spectrum are large mainframe systems that may have well-defined nameplate power ratings. For example, a study by EPRI lists the power rating of an IBM 3090 with two processors as 91.2 kW (Roach, 1988). The problem with identifying an average multi-user system is that such a system consists of several individual components. The same EPRI report lists several mainframes and mini-computers with components such as disk storage, central processing units, and non-computing components, such as printers and terminals.

On the other end of the computing spectrum are the small laptop, notebook, and hand-held computers that are making their way into the office. Future surveys of office equipment may need to insure that these are accounted for separately from the desktop machines. These are generally single-user systems, which may be battery operated, and often draw only as much power as a single compact fluorescent lamp (10 to 20 W).

Between these extremes lies a huge range of computing systems. Some mini-computers serving multiple users draw as much power as single-user personal computers. For example, a Vax Workstation 11/GPX may serve zero (operating as a server within a network), one, or two VDTs. Its nameplate power of 690 W is close to the 672 W power rating of an IBM PS-2/80 (with a 70 MB hard drive, special boards, and a color screen). A multi-user Vax Workstation II with no GPX (graphics performance accelerator) is rated much lower, at 345 W.

Identifying an average component is also difficult for the other equipment categories. Take, for example, printers or copiers. We are all familiar with small desk-top printers and small copiers. On the other end of the spectrum are line printers and other machines associated with large-scale production. We will continue to see changes within many of these equipment categories, such as integrated systems like the copier-printer-fax machines. We believe that the definitions described in this report should be reviewed and updated repeatedly (perhaps every two years) during the time period covered in the spreadsheet's forecast horizon (reaching 2011).

V. DATA DEVELOPMENT

In this section we describe the data used to develop the revised spreadsheet for the equipment categories previously identified. We begin this section with a discussion of the our analysis of the 1985 PG&E on-site survey data, how we created the component categories, and review of the nameplate power ratings. Next, we examine the equipment saturations from both the PG&E on-site surveys and the similar data set from the 1988 SMUD on-site surveys. When the project began, we intended to use the PG&E survey data for the nameplate power ratings and the equipment saturations. Later, we determined that the SMUD data provided more reliable estimates of equipment saturations because of the detailed equipment categories used in the survey. We have not conducted primary data analysis of the SMUD data set; data were compiled from a report summarizing key findings from the survey (ADM, 1990). Both of these surveys provide information on building characteristics and operating patterns of each type of equipment found in commercial buildings. Similarly, both surveys were conducted to aid in studying current energy use patterns of commercial buildings and forecasting future trends.

Data on operating characteristics are more scarce than power ratings and saturations, and we discuss several sources of data in determining final inputs for the spreadsheet. The most useful primary and secondary data sources are listed in Table 2. These references were discussed above in Section II.B.

V.A. Analysis and Comparison of PG&E and SMUD On-Site Survey Data

Although the PG&E on-site surveys have been reviewed as part of two previous studies (BR and CEC89), we re-investigated the data with the objective of improving our characterization of the 1985 office equipment stock. Our analysis was conducted to improve equipment definitions, component nameplate wattages, and saturation data. The building and component characteristics data used in the analysis include:

Building id (unique building identifier)
Premise code (building type)
Gross audited area (ft^2)
Year built
Total standard-day building occupancy (number of people)
Annual hours of operation (hours/year for each piece of equipment)
Number of pieces of equipment (quantity per building)
Total nameplate power (W)
Equipment name (alphanumeric label)

V.A.1. Creation of Component Categories for PG&E Data

The on-site survey was designed to report up to eleven categories of non-HVAC and non-lighting electric equipment in the section entitled "Other Electric Equipment". Unfortunately the building auditors did not use a standard set of definitions in labeling the miscellaneous equipment. Consequently, the first step in our analysis was to assign each piece or group of equipment to a general category. We created a data record for each piece of equipment and compared the labels with the original PG&E categories and the equipment definitions used in previous studies. Each equipment observation was assigned to one of the seven types listed in Section V.B. The following four categories were also examined.

- *Printer/Computer* -- thirty labels listed mixed Printer/Computers, which we used to track saturations, not nameplate power
- *Other Office* -- an assortment of "leftover" equipment used in office information systems, such as shredders, microfiche readers, and ten-key adding machines, etc., which are not covered in the seven major categories listed in Section V.B.
- *Cash Registers* -- recorded for all buildings, but not included in our office prototype (because of saturations)
- *Other Non-Office* -- an assortment of "leftover" equipment not considered part of office information technology, such as cooking, vending machines, vertical transport, and any other equipment listed in the survey under "Other Electric Equipment".

These four categories are not included in the final spreadsheet design for office buildings, but were created to enhance the level of detail of our analysis of the PG&E on-site survey data. A complete list of the 221 equipment names assigned to the first ten office equipment categories is contained in the Appendix. All other listings, which account for 3099 equipment observations, are included in the eleventh "Other Non-office" category, which are outside the scope of this study.

The equipment labels are often vague. We identified eighteen labels, (listed in the Appendix) that refer to general computing. To assign these equipment to either the large multi-user computers or PC category we examined the mean component wattage, using a breakpoint of 600 W. The mixed printer and computer category was included because nine labels (listed in the Appendix) were combined computer and printer equipment, representing 30 observations among the 855 buildings. We created a separate category for typewriters because the category appeared frequently and was clearly reported. The "Other-Office" equipment includes items that appear to be part of office information technologies, but did not warrant a separate category.

V.A.2. Nameplate Power Ratings from PG&E Data

This section reviews our analysis of nameplate power ratings for each piece of equipment reported among all 855 buildings from the PG&E data. The number of observations for each equipment category, and the mean and median component nameplate power ratings are listed in Table 3. The table shows the number of observations and component power ratings based on the complete set of 855 buildings and for the subsamples of large (55 buildings) and small (118 buildings) offices. For each observation the survey includes the number of individual pieces of equipment for each observation, and the total power rating for the observation, which were used to calculate a mean component power rating for each observation. The observation mean and median power ratings are derived from the component power rating from each observation. In some cases there were one or more listings for the same type of equipment in a single building because some of the auditors used more finely defined categories than ours, which have been

accounted for in the equipment counts. For example, an auditor may have entered "large copiers" and "small copiers" as two separate categories of equipment, whereas we are lumping all "copiers" into one category.

As expected, certain categories of equipment are more problematic than others. The "cleanest" data are for typewriters, whose distribution of mean component wattages is fairly "normal", with the mean close to the median. In contrast, the distribution of power ratings for mainframes and mini-computers is highly skewed. Some of the high ratings represent a single power rating for a large computing facility. It is even possible that dedicated space-conditioning equipment may have been included with some of the power ratings. These high wattage outliers cause the mean to be an order of magnitude greater than the median. Fortunately the large office data (20 observations) show a closer fit between the mean (7,191 W) and median (4,929 W) mainframe and mini-computer power ratings, suggesting the typical rating is somewhere in the middle of the two values.

Average and median PC, printer, copier, and typewriter component wattages show little change among the subsamples by building type. For most equipment categories the small office sample, which is about twice the size of the large office sample, appears to be more representative of the total sample than the large office sample. For example, the median large mainframe and mini-computer power rating is 2,300 W for the total sample of 118 observations and is 2,400 W for the 37 small office observations, but is 4,929 W for the 20 large office observations.

Table 3 also shows the median power ratings from ELCAP, which we list as ELCAP-LBL since these data were compiled by LBL based on the *ELCAP Connected Load Survey Data Summaries,* made publically available in February, 1991 (Pratt, 1991). These component data were not available in Pratt et al. (1990) but are based on the same connected load survey data. All of the ELCAP-LBL data show higher nameplate power ratings than the "all-buildings" PG&E sample. This may be a result of ELCAP's decision to report only equipment for which the total component wattage totaled 1 kW; that may bias the sample toward larger components, as described above in Section II.B. Many of the component power ratings are similar to those in the PG&E data. For example, the medians are notably similar for printers and are reasonably close for the PCs.

V.A.3. Comparison of Equipment Saturations From PG&E and SMUD Data

After developing eleven component categories and reviewing mean power ratings, we examined equipment saturations. We reviewed the mean and median equipment saturations with and without weights; we present the weighted values in Table 4.A. below because they appeared more reliable and appropriate for the analysis. The unweighted data were problematic because many of the median saturations were zero. We suspect that the audits do not clearly reflect actual equipment saturations because there was no consistent set of equipment definitions for the auditors to follow. The mean saturations were derived by summing the total number of units for each building type and each equipment type, and calculating a saturation based on the total floor area for each building type.

Table 4.A shows the saturations for each equipment type from the 1985 PG&E and the 1988 SMUD on-site surveys*. For small offices the SMUD saturations are higher for each type of equipment. We have compiled the data into building types to match the eleven building types used for the California forecasts. Note that the "Schools" category is Kindergarten through 12th Grade.

* The SMUD survey was based on surveying the equipment in the largest building for each service account. The floor area reported in the ADM report (ADM, 1990) was based on the total

The third set of data in Table 4.A shows the SMUD saturations compared to the PG&E saturations. No value is shown if the PG&E saturation was zero. There are some important issues to consider in comparing the two data sets For example, as discussed above, unlike the PG&E data, the SMUD data survey form used specific definitions for office information equipment. We have aggregated the SMUD data to equipment categories comparable to the PG&E data. One important difference in the survey data is the difference in the mainframes and mini-computers category. The PG&E survey did not use a consistent set of definitions for mainframes and mini-computers; the SMUD category is based on counts of central processing units (CPUs) and disk drives. (There were many more disk drives than CPUs.) For the large computer category the SMUD saturation is much greater than the PG&E saturations because individual components were counted. Many mainframe systems were counted as single units in the PG&E data; in other words, their components were not counted individually.

The SMUD saturations of PCs are about three times as great as those in the PG&E data. (We added word processors to the PC category to calculate the total number of desk top computing machines for both surveys). This is probably because of the increase in PCs during the three years between the two studies and the more precise count in the SMUD audits. The higher saturations of Fax machines (12 times greater) in the SMUD data is not surprising because of the increase in sales of Fax machines between 1985 and 1988.

The SMUD survey counted adding machines and microfiche readers separately, which we have added to their "other office" category. Additional subcategories were included in their survey form, which give some additional information on the composition of the "other". The ADM report on the SMUD survey results did not include a total count of cash register machines (though it did contain a field to indicate if one or more were present within a building.)

V.A.4. Derivation of Equipment Saturations by Building Type

To extend the analysis of the office equipment to other building types we calculated equipment saturations and examined their relative fractions compared to the small office. We have used the small office equipment saturation as the baseline building type because small offices tend to devote the largest part of their floor area to office use, as opposed to large offices that may often also contain cafeterias, retail, and other non-office space. Table 4.B shows the saturations of each equipment type for each building type as a fraction of the small office saturation. The table shows that for both the PG&E and the SMUD data, nearly all of the equipment saturations are lower for each of the building types than for the small office, indicated by values less than one. The large office showed higher PC and printer saturations, and nearly identical typewriter saturations. One exception is cash registers, which are, as expected, more common in grocery stores, retail buildings, and restaurants.

In designing the spreadsheet we have chosen to use the SMUD saturations as the starting point for backcasting and forecasting saturations because the data appear more reliable than the PG&E saturations since the survey used explicit office equipment definitions. One exception is for mainframes and mini-computers, which, without the associated nameplate power data from the SMUD survey, would be misrepresented. The other categories appear to have more uniform component descriptions.

---

floor area. We received the floor area data associated with the equipment survey area from ADM to calculate the mean saturations.

We have also chosen to use the SMUD data to represent the office equipment saturations found in each building type as a fraction of the baseline small office saturations. Large and small offices will be represented separately, but we are using the same saturations for the two building types, so the output in terms of NPDs and EUIs is identical. There are not sufficient data to indicate that there is a difference between office equipment energy use among the two building types. The SMUD survey data do not distinguish between large and small offices. The PG&E survey showed differences, but no clear trend among the two because of small sample sizes. Past studies show conflicting results whether EUIs and NPDs are greater in large or small offices. Further discussion of this topic is contained in Section VII.C.

Similarly, there is a lack of data for several other building types. The PG&E on-site survey only had two types of education buildings: kindergarten-12, and colleges, but there was only one college building in the sample. The SMUD survey did not include college buildings. We have listed the SMUD saturations for both building types: schools (K-12) and colleges. Another example of non-uniform categories is for health buildings: the SMUD survey had "health" and "hospital" categories, PG&E had only a "health" category. and the CEC had a "hospital" category. We aggregated the "health" and "hospital" data from the SMUD survey to form our "hospital" category, and we used PG&E's "health" category for our "hospital" data. Additional aggregation of the PG&E data included combining "refrigerated" and "non-refrigerated warehouses", and combining "sit-down" and "fast-food restaurants".

The bottom section of Table 4.B shows, for each building type, the ratio of the PG&E fractions of small office to the SMUD fractions. (This time, no value is shown if the SMUD saturation was zero.) A value of one shows that the relative fractions of the PG&E and SMUD saturations of a certain building type relative to the small office are identical. Although there is variation among the different building types, the overall sample compares well. This can be seen in the last columns. The poorest fits are the "Main & Minis" category and the "Other Non-office". As mentioned, the PG&E saturations probably under-counted many of the units because of many devices were combined and identified as single, large computing system; the SMUD survey had greater detail in counting adding machines and microfiche readers.

V.B. Selection of Spreadsheet Inputs

V.B.1. Nameplate Power and Equipment Saturations

Table 5 shows the spreadsheet inputs of nameplate power and equipment saturation for small offices for the seven equipment categories, plus several sources of comparison data. Part of the justification for chosing to use the 1988 SMUD survey as the baseline for equipment saturations is that the data appear consistent with other saturation estimates. Also included in the table is the number of persons per unit, which is included in the spreadsheet as a data checkpoint. The data sources listed in the table are discussed in Section II.B; additional comments on these specific data are as follows:

- *ELCAP-LBL* -- Data from LBL's analysis of the median wattages from the ELCAP Connected Load Survey Data Summaries (Pratt, 1991). We used median values because the distributions are highly skewed, with means greatly exceeding medians.
- *BR -86* -- BR used 1986 as the benchmark year in their spreadsheets
- *PG&E-F* -- Data from PG&E's original forecasting spreadsheet

- *PG&E-S* -- These data are a repeat of the small office data shown in Table 4.A from the 1985 PG&E on-site surveys. The values selected in this table is are from the "All Buildings" sample (A), "Small Offices" (S), or "Large Offices" (L).
- *SMUD-1988* -- These data are also a repeat of the small office data shown in Table 4.A from the 1988 SMUD on-site surveys
- *LBL-85 and LBL-88* -- Data in LBL's final revised spreadsheet for 1985 and 1988. The 1988 saturation data are identical to the SMUD data, except for the "Mains and Minis" category, explained below.

In addition to saturations (units/kft^2), the number of people per unit is included in the table. As discussed above in Section V.A., it is useful to check the number of users for a component to help guide saturation analysis. The original PG&E spreadsheet used 183 ft^2/person for the large and small offices, which is close to our review of the 1985 on-site survey data, but well below the BR data (271 ft^2/person). National survey data from the Commercial Buildings Energy Consumption Survey (CBECS) shows an mean of 425 ft^2/person for office buildings (EIA, 1990). This estimate is may be high because of the large area of unoccupied, vacant space in the U.S. office stock, which the other sources do not include.

Starting with perhaps the most problematic category, we see a large range in the number of people per unit for mainframe and mini-computer equipment. This range is because the characteristics of the equipment components vary among the data sources. On the high end of saturations, the BR study used a low component wattage for small offices (1,520 W). On the other extreme, not shown in the table, they used 10,900 W for large offices, with 0.03 units/kft^2 and 146 people/unit. The original PG&E forecasting spreadsheet (PG&E-F) assumed there were no mainframe computers in small offices. The LBL numbers were chosen as mid-range values. This is the only category of equipment where we have not used the 1988 SMUD saturations as the starting point because we did not have the nameplate power data associated with the saturation data. Because this category is the most difficult to determine, we've used a nameplate power rating and saturation that is a mid-range value between the PG&E large and small offices. This category warrants further investigation.

There is less range in the data on saturations and power ratings of PCs. We've used rounded values of the 1985 PG&E nameplate power ratings and adopted 1988 SMUD saturations as input to the spreadsheet. Our method to derive future saturations from the 1985 starting point uses industry projected sales data, discussed below in Section V.A.4. The resulting value of 6.6 persons per PC in 1985 is below the figures in the BR and 1985 PG&E-S on-site survey data, but it appears to be a reasonable value. The 1988 power rating of 325 W is based on the assumption that there was slight growth in the mean power of PCs, discussed below in Section V.C.2.

Like the PCs, the VDT, Copier, Printer, and Typewriter power ratings used as input to the spreadsheet (LBL-85) are based on the 1985 PG&E on-site survey data (PG&E-S). Similarly, the VDT, Copier, Printer, and Typewriter saturations input for 1988 (LBL-88) are based on 1988 SMUD data. Comparing these input data to the original PG&E forecast we see that PG&E-F apparently underestimated copier saturations, and did not estimate VDTs and typewriters.

PCs and printer saturations were linked in the BR study and in the PG&E forecasting spreadsheet, but printers were not linked to the saturation of mainframes. The BR study used a frozen link of one printer for every two PCs (which included VDTs) in 1986. There are few, if any, field data to support this assumed equipment saturation link. BR does note that printer

market analysts base sales projections on projected PC sales, using a "tie factor" of 0.85 printers per PC. The use of such a factor needs to be further investigated to consider types of printers and associated computing devices.

V.B.2. Operating Characteristics

Table 6 shows LBL inputs to the spreadsheet for the hours of operation per year (H), the average energy use as a percent of the nameplate (A), diversity (D), and resultant utilization factor (U = H*A*D/8760) of each type of equipment. The current spreadsheet model keeps these parameters fixed in time.

As in Table 5, Table 6 shows data from other studies for comparison. The two U values shown as ELCAP data are from Pratt et al. Although most ELCAP data were derived from metering and survey results, the value for mainframes and mini-computers of 0.99 was an engineering estimate, which Pratt believes may be high (Pratt, 1991). The ELCAP PC utilization factor of 0.19 was derived for small computers, which included printers and other peripherals. BR used ELCAP and engineering estimates in determining utilization factors, which ranged among the seven equipment categories from 0.24 to 0.19. Unlike LBL's spreadsheet model, BR's study allowed the utilization factors to change over time for some equipment categories. For example, they estimated that typewriter utilization decreased to 0.03 by the year 2001. Printers, however, were held fixed.

The hours-of-use data that were input to the spreadsheet for PCs, VDTs, printers, and typewriters are based on the PG&E on-site survey data. We've chosen round estimates to illustrate that these are rough values. The LBL estimate of "A" for PCs is based on direct measurements of a small sample of computers reported in Norford et al. (1990). The diversity data are based on hourly component measurements of office equipment at a PG&E case study building, which showed that only half of the computers in the office area are typically "on" during daytime hours (Martin, 1991). The resulting utilization factor of 0.05 is lower than the other studies because the office that was surveyed had a high PC saturation, which may cause a lower diversity when few machines are shared. We've assumed a similar diversity for VDTs, but a higher A value because VDT power supplies are sized more closely to their fixed load requirements.

Printer and copier utilization is more difficult to characterize than use of PCs and VDTs because printers and copiers have several modes of operation and the operating data for these equipment categories are rough estimates. We've based the average as a percent of nameplate on some limited measurements reported in Norford et al, which reports peak and mean power use. The values of A reported here were estimated in combination with the diversity data and hours of operation. Some diversity data are available from the PG&E case study building, against which these values have been checked. Ideally we would translate hourly load shape data into the three parameters (H, A, and D) to compare the overall utilization value.

The operating conditions of mainframes and mini-computers are difficult to model as a system because they typically represent more than one piece of equipment. For example, a large tape drive may not operate 24-hours a day, whereas the central processing unit may. In addition, these components may differ in average energy use as a percent of their nameplate ratings (A). The value of A (0.50) is an engineering estimate.

There are also few measurements of fax and typewriter data. The fax, like a copier, may have several modes of operation. The typewriter, however, like the VDT, has a more constant load.

V.C. Estimating Past and Future Office Equipment Data

V.C.1. Past and Future Nameplate Power Ratings

Although we have compiled survey data to benchmark office equipment statistics and energy use for the mid-1980s, data for more recent years are not yet available. Moreover, future changes are difficult to predict in view of conflicting trends. We offer some general comments on our rough estimates of major component trends. Perhaps most significant is the well documented change during the past decade from large mainframes and mini-computers to PCs, noted in BR and in the Harris and Norford papers. The mix of equipment within the computing categories is changing, with greater use of work stations, Computer-Aided-Design (CAD) systems, and mini-computers. Laptop computers sales are booming though they are predominantly for travel and home use, at least in the current market. Other major trends include increasing saturations of personal copiers, Local Area Networks (LANs) of PCs, large growth in fax machines, and the move to laser printers.

Assuming that numbers of PCs are increasing more quickly than large computers, we are faced with the question of how mean component wattage is changing. We have estimated that the mean PC power rating is slowly increasing. This trend is consistent with rating found among Macintosh and IBM computers during the 1980s. The Mac Plus is rated at 60 W machine while the Mac SE is rated at 100 W. The IBM PC XT is a 440 W machine while the AT is a 500 W machine. The trend toward miniaturization, portables, laptops, and improvements in low power machines may be counterbalanced by the increased power requirements of color screens (and, at a lower pace, color printers and copiers). The overall trend for the 1990s is difficult to predict; ideally we would like to have a compilation of PC sales forecasts linked to machine power ratings.

Figure 1 shows our component nameplate power inputs to the spreadsheet. We've made some simple estimates that, during the forecast period, some components are increasing in average power, others are decreasing. For example, we estimate that the average nameplate power for mainframes and mini-computers is decreasing by 50% from the early 1980s to the mid 1990s. On the other hand, we estimate that PC power ratings have increased from 250 W in 1983, to reach 400 W by 1995, an increase of 60%.

V.C.2. Past and Future Equipment Saturations

Saturations of most of the equipment categories reviewed in the spreadsheet grew tremendously during the the 1980s. To estimate changes in equipment saturation beyond 1988, we have used historic and projected equipment sales data from the Computer and Business Equipment Manufacturer's Association (CBEMA, 1991). The equipment categories chosen for analysis generally compare well with those available from CBEMA. CBEMA defines three categories of computer systems:

- *Mainframe computers* -- systems include central processing unit, storage, and console display, costing more than $350,000.
- *Mini-computers* -- systems include central processing unit, storage, and console display, costing between $15,000 and $349,999.
- *Personal Computers* -- systems include central processing unit, storage, keyboard, and monitor costing less than $14,999. Excludes systems less than $1,000 list price used for non-business applications such as games and home computers. Also excludes hand-held and notebook computers.

To forecast future equipment saturations we input annual equipment sales growth rates into the spreadsheet. This technique assumes that the increase in future office equipment saturations is linked to the sales of office equipment. The procedure to derive growth rates from annual sales projections is as follows. An average stock lifetime was used to estimate a stock level for each year. The lifetimes used in the stock derivation were six years for all equipment except mainframes and mini-computers (eight years), and PCs (four years). The six-year lifetime is based on the Internal Revenue Service's Depreciation Tables. These tables show "lives" of dozens of classes of commercial and industrial equipment (IRS, 1989). The classes of interest to our study are class 00.12 "Information Systems," which has two categories: 1) computers and peripherals (includes printers), and 2) class 00.13 "Data Handling Equipment, except Computers," which includes typewriters, copiers, etc.

Figure 2 shows equipment growth rates derived from the CBEMA data for 1983 to 2011 for each type of equipment. The growth rates are based on historic data for 1983 to 1989; the 1990 value is projected, and estimates are provided for 1991 to 1995, and 2001. We used the 1990 to 2000 decade average growth rate trend to project to 2010. All of the growth rates flatten during that period, except for printers; large fluctuations in stock changes cause the growth in printers to continue rising. The most dramatic growth is in fax machines, which nearly double the stock in one year (1988). Many of the growth rates dropped in the early 1980s, such as those for PCs, printers, mainframes and mini-computers, copiers, and VDTs. The typewriter increase in the late 1980s is a result of developments in "smart" electronic typewriters; this increase then drops to a negative growth rate in 1991.

After having generated the growth rates we adjusted the rates downward to level out by 2010. This was done because CBEMA only projects to 2001, and it is likely that growth rates may continue to decrease in the first decade of the 21st century, as they are projected to do from the 1980s through the 1990s. In making the adjustment we considered full saturation levels such as the number of PCs per person, which reached two persons per PC in 1994 and 1.3 persons per PC in the year 2000. This saturation parameter is directly related to the occupant density, and will need to be examined as better data become available.

We also used the CBEMA derived growth rates to "backcast." The 1985 saturation levels presented in Table 5 were an example of the resulting saturations.

VI. SPREADSHEET PRESENTATION

We have created a spreadsheet that can be easily updated and improved as more reliable data become available. One objective of our design was to separate input data from output parameters. A second objective was to assign confidence levels and data source codes for each input parameter to reflect the quality of the data. Data based on measurements or survey results have a higher confidence level than those based on estimates or engineering judgement.

The final spreadsheet is shown in Appendix B, and illustrated by a series of flow charts in Figures 3, 4, and 5. The spreadsheet contains a summary of the key data fields, listing the input parameters, the output parameters and their associated formulas based on the input, plus confidence level and data source codes.

In the small office baseline segment of the spreadsheet the equipment data inputs are on the left side of the spreadsheet; the output data are on the right. This part of the spreadsheet includes the component energy calculations, show in Figure 3, that are repeated for seven types of

equipment, as illustrated in Figures 4. Figure 5 shows how the results from the small office spreadsheet are used to derive office equipment EUIs for all other building types and total GWh for the commercial sector. Energy use intensities for each category of equipment, for each building type, are derived from the small office EUIs based on the equipment saturations, noted as a "scaling factor" in Figure 5. Figures 3 through 5 use the symbols described below; with the spreadsheet labels shown in *italics*.

VI.A. Component Energy Use Calculations

Using the small office building type as the basis for all other building types, the main body of the spreadsheet contains the energy use calculations for each of the seven equipment types, or components.

VI.A.1. Component Calculation Inputs

Figure 3 illustrates the flow of data for the component energy use calculations. There are five primary input parameters in the main body of the spreadsheet. Three of the input parameters are held constant in time. First is "A", the average energy use as a percent of the nameplate rating *(A = Avg/Rated W)*. The second factor, annual hours of operation, is also held constant *(H = Hrs/Yr)*. Third, we include the equipment diversity *(D = Diversity)* to account for the fact that not all of the equipment in an office will be "on" during its normal operating schedule.

The two input parameters that change in time are the component nameplate rated power *(N = Nameplate Power (W))* and the saturations of equipment per thousand square foot *(S = Saturation (Units/kft^2))*.

Several columns of the spreadsheet contain input values indicating a *Confidence Level* rating of high (H), medium (M), or low (L). For example, we list the "A" for PCs as "High" confidence because it is based on the monitoring by Harris and Norford. The 1988 saturation data are also listed as "High" confidence, because they are based on the 1988 SMUD survey. Because of the lack of field monitoring of equipment diversity of use we assign all estimates of diversity a "Low" confidence rating. A second data label describing the *Data Source* is provided for the inputs that change in time to show whether the data are benchmarked from survey or monitoring studies *(B = Benchmarked)*, are an engineering estimate, *(E = Estimated)*, or are forecasted from industry sources *(F = Forecasted from CBEMA)*.

VI.A.2. Component Calculation Output

Figure 3 also shows the three output parameters derived for each of the seven types of office equipment. The flow chart shows which of the five input parameters are used to generate the output. The Unit Energy Consumption is the annual energy use for each type of equipment *(UEC = Unit kWh/year)*, and is based on N, A, H, and D. The office equipment Nameplate Power Density *(NPD = W/ft^2)* describes the installed rated power and does not include any of the operating inputs. The Energy-Use Intensity *(EUI = kWh/ft^2-year)* is based on all five inputs and is the basis for further calculations of total energy, described below. We've assigned a confidence level to the EUI, which is an average of the five input confidence levels.

As a check on the saturation data an additional output is the number of persons per unit *(P = Prsn/Unit)* based on the inputs of saturation *(S = Units/kft^2)*, and floor space per person *(SP = Sqft/person)*. We have used the value of SP of 183 ft^2/person from PG&E's original spreadsheet to generate this output, which can be easily modified as an input for future analysis.

VI.B. Total Energy Use of Office Equipment for Small Offices

The small office prototype is the main building type for the component calculations, as shown in Figure 4. For each of the seven equipment types, the NPD and EUI are calculated. The total office equipment NPD and EUI are summed for the small office prototype.

The total office equipment EUI is used to estimate the total stockwide, annual energy use of office equipment in small offices. The input data for the small offices are the stock floor area *(AR - Area $10^6 ft^2$)*. PG&E forecasts of floor space have been used in the spreadsheet. The product of the stock floor area and EUI is the total energy use of the office equipment for small offices *(GWh)*.

VI.C. Office Equipment EUIs for All Building Types and Total Sectoral Energy Use

The office equipment energy use intensities for the other ten buildings are scaled for each equipment type based on the saturation of equipment relative to the office saturations from the 1988 SMUD on-site survey data. This scaling is illustrated in Figure 5. The spreadsheet includes the EUI and each equipment type, for each building type, by year. These EUIs are summed to calculate the total office equipment EUI for each building type. The total stockwide floor area for each year are input to the spreadsheet and multiplied by the EUI to derive the total energy use (GWh) of office equipment for each building type. The final output of the spreadsheet is the sum of the annual office equipment energy use for each building type, representing the total energy use of office equipment in the commercial sector.

VII. RESULTS AND DISCUSSION

In this section we review the spreadsheet output, including office equipment EUIs for the small office prototype and other building type, and the total energy use of office equipment for the PG&E service territory.

VII.A. Office Equipment Nameplate Power Densities and Energy-Use Intensities

The most notable trend in the nameplate power density data is the growth in PC and printer power. In 1983 about one-third of the installed power was from mainframes and mini-computers (0.27 W/ft^2 of the total 0.65 W/ft^2). The cumulative equipment NPD for the small office prototype is shown in Figure 6. We estimate that by 2011 the installed power of the mainframes and mini-computers will have doubled (reaching 0.54 W/ft^2), and the total NPD will reach 6.40 W/ft^2. This growth in largely from PCs and printers, which both start in 1983 at 0.02 W/ft^2, and increase by two orders of magnitude by 2011, with the value for PCs reaching 2.31 W/ft^2 and the printers slightly less, at 2.24 W/ft^2.

The energy-use intensity is a product of the NPD and three static inputs: A (average energy use as a percent of rated nameplate power), H (hours per year), and D (diversity, the percent of units "on" during standard operating hours). The total office equipment EUI in the small office prototype ranges from 1.0 kWh/ft^2-year in 1983 to 4.2 kWh/ft^2-year in 2011. Mainframes and mini-computers remain the most energy-intensive component, because of greater values of A, H, and D. Their EUI also doubles from 0.78 kWh/ft^2-year in 1983, to 1.55 kWh/ft^2-year in 2011. By 2011, PCs have become the second most energy-intensive component (1.10 kWh/ft^2-year), despite having started in 1983 at only 0.01 kWh/ft^2-year, the same as printers. Printer energy use is also expected to grow quickly, reaching 0.59 kWh/ft^2-year by 2011.

The growth in office EUIs has been faster in the 1980s than during any future period in the forecast horizon, reaching 2.3 kWh/ft^2-year by 1990, and 3.4 kWh/ft^2-year by 2000. Estimated office equipment EUIs for the small office from 1983 to 2011 are shown in Figure 7. The office equipment EUI is dominated by mainframe and mini-computer energy use during the 1990s, with PCs the largest growth in the EUI for the 1990s and beyond.

The relative importance of different types of office equipment in driving peak demand differ from their relative contribution to annual energy use. This can be seen by the components of the NPD and the EUI. Although the total office equipment NPD is not the same as the peak electrical demand, its relative composition is close to that of peak. This is an important fact in the analysis of cooling loads. PCs and printers will more likely increase the need for cooling than the other equipment types.

VII.B. Office Equipment Energy-Use for All Buildings

The total office equipment EUIs for each building type are shown in Figure 8. As discussed above, because of the lack of consistent data to suggest major differences between large and small offices we have modeled the two building types identically, but have kept each building type in the spreadsheet for future users. Based on the 1988 SMUD office equipment saturations, hospitals are the second most intensive in office equipment energy use. We estimate that office equipment EUIs in hospitals are currently about 1.3 kWh/ft^2-year (1991), slightly over half as much as in the offices. Next are the schools at 0.95 kWh/ft^2-year (1991). As with the offices, data to describe differences between schools and colleges are lacking, so they are represented with identical input and output data in the LBL spreadsheet.

The rank, in ascending order, of the EUIs in 1991 for the remaining building types are: warehouses, retail, miscellaneous, hotel, grocery, and restaurant. We have not included data on point-of-sale cash register machines in the spreadsheet, which, if included, would probably shift the rank. Retail buildings would probably rise in the rank. Because of the mix of individual component saturations, there is some change in the total EUIs relative to other building types. Notice in Figure 8 that the retail building EUIs were greater those for warehouses in the 1980s. The change in order occurs because of the greater starting saturation and growth of PCs in the warehouses, as listed in Table 4.A.

As described above in Section VI.C, total commercial sector energy use is estimated by building type as the product of the total office equipment EUI and the total sectoral floor area. Figure 9 shows the total annual energy use by office equipment based on the preliminary ER92 PG&E floor-space projections. The large offices dominate the energy use of office equipment within the commercial sector throughout the forecast horizon. The large offices account for 42% of the energy use in 1983 and increase to 48% by 2011.

VII.C. Results and Comparisons with Past Studies

VII.C.1. Nameplate Power Densities and Energy-Use in Offices

Tables 7 through 10 compare the LBL spreadsheet output of NPDs and EUIs with results from other studies. The tables show six components of office equipment according to the level of detail available in each study. Subcategories include: (1) total computers (mainframes, mini-computers, plus PCs), (2) computers and printers, and (3) total copiers, fax, and miscellaneous other office equipment. In the LBL spreadsheet "miscellaneous other office equipment" consists of VDTs and typewriters. In other studies it may also include equipment such as adding

machines and microfiche readers.

Starting with the large office NPDs in Table 7, we see the LBL estimate of 1.32 W/ft^2 is similar to the estimates by BR (1.30 W/ft^2) and Pratt (1.53 W/ft^2) estimates. The CEC data are on the low end of the NPD estimates. The original PG&E spreadsheet (PG&E-F) estimate for 1986 was much greater, estimating 2.07 W/ft^2. The subcategories of the 1986 LBL NPD are more like those in BR and Pratt data than the PG&E data. The PG&E NPD is high on PC and printer power and comparatively low on all other components except the fax. The PG&E NPD also climbs more quickly than the LBL estimate.

The link between the NPD and the EUI are the operating data (A, H, and D). The LBL EUI estimate for 1986 (1.71 kWh/ft^2-year) is lower than those from BR and ELCAP, the original PG&E spreadsheet (PG&E-F), and CEC88 estimates, but greater than CEC89. At the component level, the LBL estimate is higher for mainframe and mini-computers than BR and PG&E-F, but lower for PCs and printers.

Tables 9 and 10 follow the same format as Tables 7 and 8 for the small offices. The LBL data are the same as in Table 7 and 8 because we combined the estimate for large and small offices. The original PG&E spreadsheet predicted higher office equipment power densities and energy use in the large offices, as did CEC88 and CEC89. The BR and ELCAP estimates show the opposite trend. Additional data are needed to understand the difference between large and small offices.

Looking beyond 1986, Table 8 includes preliminary large office EUI estimates from PG&E and the CEC from preliminary forecasts results (known as the Electricity Report-1992, or ER-92) for 1994. These data, and other comparison years are shown in Figure 10. The four bars show the EUI estimates from CEC, LBL, and two from PG&E, both the original spreadsheet and ER-92. All four estimates show steeper EUI growth in the late 1980s, slowing in the 1990s and beyond. LBL's EUI estimates are the lowest in the comparison, and the CEC's are the highest.

VII.C.2. Total Commercial Sector Energy Use

While LBL's EUI estimates for offices are below the PG&E and CEC estimates, future growth estimates for total energy use in the commercial sector fall within PG&E and CEC estimates. Figure 11 shows the total commercial sector office equipment energy use from LBL, and preliminary ER-92 estimates for the CEC and PG&E. The LBL estimates of total energy use exceed the PG&E estimates after 1995 because of our estimates of greater office equipment EUIs in the other (non-office) building types. The CEC estimates are the highest estimates. It should be noted that we used PG&E floorspace projections that differ from the CEC estimates.

Using PG&E's ER-92 estimates of total commercial sector energy use and LBL's estimates of total sector office equipment energy use, we determined the fraction of total energy used by office equipment. The fraction of energy used by office equipment appears to growing, starting in 1989 at 5.8%, reaching 6.6% by 1994, 9.2% by 2003, and 10.9% by 2011.

VIII. RECOMMENDATIONS FOR FUTURE WORK

The results of this study lay the foundation for future work in improving the characterization of office equipment energy use. Three categories of improvements are needed to to enhance the current design and use of the spreadsheet model. First, the incorporation of recently available or soon to be available data on office equipment will improve the assumptions used in the

model, linking input more directly to results from other studies. Second, there are several possible applications of the spreadsheet for scenario analysis; we have presented only our "best-guess" input assumptions. Third, there may be ways to improve the spreadsheet design as better data become available, such as incorporating features such as the use of occupant density as a driver for future saturations and improved equipment definitions. Further examples are presented below. The final section discusses the need for improved data beyond the spreadsheet model.

VIII.A Incorporate New Data Sets

There is a need for improved, public-domain data on the current stock of office equipment. Data are needed on better equipment characteristics, usage patterns, projected markets and sales, component and aggregate loads, energy consumption, and thermal (HVAC) requirements for office equipment (by building type, space function, region, etc.).

Fortunately, several survey projects have been recently completed or underway producing regional estimates of historic and current office equipment stock data. These surveys include levels of detail beyond the data sets available to date.

One such data source is the 1988 SMUD on-site surveys. We have only partially used this survey in the above analysis because we only had a general summary report on the equipment saturations. Additional analysis of the data in the survey on the load ranges for each equipment type would greatly improve our confidence in the average 1988 component nameplate power data. The survey format lists nine power ranges for the auditor to choose from, starting with "less than 500 W", and ranging up to "greater than 100 kW". A second area of analysis that these data would support is the link between occupant density and equipment saturations. We suspect that occupancy may be strongly linked to equipment saturations.

There are two other sources of data from the PG&E service territory that relate to this study. First, there is the survey project currently underway which is a study of the change in office equipment over a multi-year period. These data will help establish how quickly the systems in existing buildings change and whether power levels of the components are increasing. The initial, first year survey has been completed. Second, is an end-use metering study that could help show the load shape associated with miscellaneous equipment energy use patterns and levels of intensity.

Several other sources of data are available from projects outside of California. One is the Pacific Northwest Non-Residential Building Characteristics Survey (PNNonRes), sponsored by the Bonneville Power Administration. This survey instrument contains detailed office equipment inventories at the tenant level. This survey may be the most useful information on the link between occupants and office equipment. These, and the other survey data are also needed to improve estimates of the hours of use of office equipment.

It should be emphasized that there is better information on current equipment nameplate power ratings and equipment saturations (due to coverage within commercial surveys) than there is on equipment operating data. Researchers from the National Research Council (NRC) of Canada recently developed a software program that can be installed on PCs to monitor PC on-time and active-use time This effort aims to use the software in a statistically meaningful sample of offices and other building types to gather information on operating habits. This concept could be extended to gathering operating data on networked printers, mini-computers, and their peripherals and remote users. NRC has also been monitoring individual pieces of equipment.

Another project at Pacific Northwest Laboratory is part of the Hanford Energy Conservation Project. Hourly component monitoring of PCs, VDTs, printers, copiers is underway. These data will be useful to compile average energy use as a fraction of the nameplate power rating, hours of use, and possibly more explicit representations of equipment hourly load shapes. Beyond this project, there are additional needs to develop and apply simplified monitoring techniques and hardware for other equipment.

Several additional sources of equipment data have also been identified, including a metering study in Finland that has produced results similar to the Harris and Norford studies (Wilkins et al., 1991).

To improve our understanding of the future office equipment characteristics and market trends it would be valuable to work out agreements with individual firms and market- research organizations to put some of their data and analyses in the public domain.

VIII.B. Scenario Analysis

This report describes one set of input and output assumptions. Two main applications of the spreadsheet model could be useful to forecasters and energy planners. First, is the extension of the above analysis to parametric or scenario analysis. This would include developing "reasonableness boundaries" for each input parameter, examining the results of a set of possible scenarios. A congruent task would be to develop input data that give a certain set of results to explain differences in various forecast scenarios. For example, we could develop scenarios that help explain the differences between the CEC and PG&E forecasts.

A second use of the model would be to examine the potential impact of energy-efficiency programs. Efforts are underway to develop a consortium of public and private participants interested in capturing the cost-effective potential for reducing on-peak energy use by office equipment, while maintaining or improving overall performance and quality of service to end users. The emphasis will be on accelerating deployment of best-available technologies.

VIII.C. Enhanced Model Design

There are several opportunities to improve the spreadsheet design to handle more detailed office equipment data (described above in Section VIII.A). As better data become available the representation of unique office equipment operating data could be included for each building type. While the focus of the spreadsheet has been on representing office equipment energy use, the development of estimates of equipment peak electric demands and total coincident demand are needed. Peak demand data are particularly important for California since the office equipment peak loads will likely be coincident with maximum cooling peak demands and utility system peak demands in the summer time.

We have mentioned the need to examine the use of occupancy as a driver of office equipment energy use. And also as mentioned, several sources of data are available to examine the link between occupancy and office equipment saturations. Based on these findings, it would be a useful improvement to the spreadsheet to include explicit links of occupant density data as a driver of saturations rather than units per floor area.

Further review of equipment definitions is warranted because we encountered difficulties in interpreting past survey data. Standardization in terminology will help improve current and future survey efforts and help link results to other industry and market data. Another enhancement would improve the links between the input data, with better tracking of the the relationship

between individual components, such as multi-user computers and VDTs, or PCs and printers. This might lead to a characterization of the office equipment stock into several classes of standard "computing environments". For example, we may find it helpful to track the use of LANs, multi-user mini-computers, and isolated PCs.

VIII.D. Complementary Research Beyond the Spreadsheet Model

Although our spreadsheet model has been developed to aid forecasters in tracking and predicting the energy use of office equipment, it also serves as a useful tool for more general energy analysis. We mentioned above, for example, that the model may be useful in estimating the energy savings from efficiency programs and policies targeted toward office equipment. The data needs by energy analysts interested in energy savings potential of office equipment go beyond the scope of data discussed in this report. To help evaluate the energy use characteristics of individual devices there is a need to develop standard testing and product ratings. Such standardization would greatly help improve our model structure. It would also be desirable to develop improved characterization of the interactions between each office equipment and building HVAC systems.

IX. ACKNOWLEDGEMENTS

This project was sponsored by the California Institute for Energy Efficiency. Valuable assistance and comments were provided by Jeff DeValois and Steve Blanc from PG&E, and Ed Hamzawi from the CEC. We also thank Eric Martin from Brown Vence Associates for providing information on monitoring work in progress. Support was also provided by the Assistance Secretary for Conservation and Renewable Energy, Office of Building and Community Systems, Building Systems Division of the U.S. Department of Energy under Contract No. DE-AC03-76SF00098.

X. REFERENCES

ADM Associates, Inc., "Commercial Energy Use Survey in the SMUD Service Territory," prepared for the California Energy Commission and the Sacramento Municipal Utility District, November 1990.

Baker Reiter Associates, Inc., "Market Assessment of Computers and Miscellaneous Equipment in the Commercial Sector," prepared for Bonneville Power Administration, September 30, 1989.

Computer and Business Equipment Manufacturer's Association (CBEMA), *Information Technology Industry Data Book 1960 - 2001,* Industry Marketing Statistics, CBEMA, Washington D.C., 1991.

Energy Information Administration (EIA), "Nonresidential Buildings Energy Consumption Survey: Characteristics of Commercial Buildings 1986," Office of Energy Markets and End Use, U.S. Department of Energy, DOE/EIA-0246(86).

Hamzawi et al., "ER 90 Preliminary Demand Forecast Testimony for the Forecasted Penetration and Electric Use of Commercial Sector Office Equipment," *1990 Electricity Report Proceeding Docket No. 88-ER-8*, October 6, 1989.

Harris, J., Roturier, J., Norford, L.K., and Rabl, A., "Technology Assessment: Electronic Office Equipment," LBL Report-25558, November 1988.

Internal Revenue Service (IRS), *Publication 534,* Depreciation, Table of Class Lives and Recovery Periods, 1989.

Lovins, A. and Heede. H., "Electricity-Saving Office Equipment," Competitek, Rocky Mountain Institute, September 1990.

Martin, E., personal communication concerning measurements of office equipment energy use at the PG&E Sunset Building, August 30, 1991.

Michaels, H., DaSilva, J., Gould, W., "Electronic Equipment Load Growth," *Proceedings* of the 1990 ACEEE Summer Study on Energy Efficiency in Buildings, Vol. 3, August 1990. Prepared by Xenergy for Consolidated Edison of New York.

Nguyen, H.D., et al., "Energy Consumption by Computers and Miscellaneous Equipment in Commercial Buildings," *Proceedings* of the 1988 Summer Study on Energy Efficiency in Buildings, Volume 3, August 1988.

Norford, L., Hatcher, A., Harris, J., Roturier, J., and Yu, O., "Electricity Use in Information Technologies," *Annual Review of Energy, Vol. 15,* 1990.

Pratt, R., Williamson, M.A., Richman, E.E., and Miller, N.E., "Commercial Equipment Loads End-Use Load and Consumer Assessment Program (ELCAP)," Prepared for the Bonneville Power Administration by Pacific Northwest Labs, DOE/BP-13795-24, July 1990.

Pratt, R., "ELCAP Connected Load Survey Data Summaries," Prepared for the Bonneville Power Administration by Pacific Northwest Labs, March 1991.

Pratt, R., personal communication, August 1991.

Roach, C., "Office Productivity Tools for the Information Economy: Possible Effects on Electricity Consumption," P/EM-6008, EPRI Research Project 2345-30, October 1988.

Wilkins, C.K., Kosonen, R., and Laine, T. "An Analysis of office equipment load factors," *ASHRAE Journal,* September 1991.

TABLE 1. COMPARISON OF PG&E EQUIPMENT DEFINITIONS WITH OTHER STUDIES, AND LBL CATEGORIES

PG&E Category/ Source	MAIN	MINI	PC	DOTM	LASR	FAX	COPY	SPCE	AV
CEC88	DPT	DPT	DPT	DPT	DPT	OFF?	OFF	OFF	ENT
PRATT/ELCAP	LCE	LCE	CMP	LCE CMP	LCE		OFF	OFF	MISC
BR	CMPT	CMPT	CMPT	CMPT	CMPT	OFFE	OFFE	OFFE	?
CON ED	LGC	LGC	PC WRPR?	PRNT	PRNT		COPY	TERM? WRPR? OTHR	OTHR
SMUD	DSK/CPU	DKS/CPU	PC	PRNT	PRNT	FAX	COPY	OTHR VDT TYPWR FICHE AD MCH WRPR	
LBL	M&MC	M&MC	PC	PRNT	PRNT	FAX	COPY	VDT TYPWR	

See text for list of PG&E definitions. "?" is included where the category was assumed to fit but not specifically cited.

CEC88 used 3 primary categories:

DPT - Data Processing Technology: Mains, Minis, PCs, etc.
OFF - Office Equipment: copiers, typewriters, shredders, calculators
ENT - Entertainment: stereo, VCR, projector, vending machine

PRATT/ELCAP used 24 primary & 3 secondary categories:

OFF - Office Equipment: typewriters, copies, cash registers
CMP - Personal Computer Equipment: VDTs, PCs, disk drives, central processors & printers
LGC - Large Computer Equip: division between personal & large computer equipment based on nameplate wattage

BR used 6 primary & 2 secondary categories:

CMPT - Computers: 1) Mainframe & mini computers, 2) PCs & VDTs, 3) printers
OFFE - Office Equipment: 4) copiers, 5) typewriters, 6) Fax

CON ED used 7 primary categories:

LGC - Large computers, mains & minis
PC - PCs
PRNT - Printers, comparison of laser, ink jet, dot matrix, & daisy wheel printers included
COPY - Copiers
TERM - Terminals, color & monochrome
WRPR - Word processors
OTHR - Other, not specified

SMUD used 20 primary and 12 secondary categories:

DSK/CPU - Disk drives and central processors,
PC - PCs
PRNT - Printers
FAX
COPY - Copiers
OTHR - Other office machines
VDTs
TYPEWR - Typewriters
FICHE - Microfiche
AD MCH - Adding machines
WRPR - Word processors

LBL Revisions:

M&MC - Mainframe and Mini-computers
PC - PCs
PRNT - Printers
FAX
COPY - Copiers
VDT
TYPEWR - Typewriters

TABLE 2. SOURCES OF DATA ON OFFICE EQUIPMENT FOR DATA DEVELOPMENT AND COMPARISONS

Data Input	Symbol	Data Sources
Nameplate Power	N	• 1985 PG&E On-Site Survey + Pratt et al. (1990) (ELCAP) + BR Associates (1989) + Original PG&E Spreadsheet
Saturations	S	• 1988 SMUD On-Site Survey + 1985 PG&E On-Site Survey + BR Associates (1989)
Saturation Growth	ST	CBEMA 1991
Avg./Rated Power	A	• Norford & Harris reports + Engineering Estimates
Hours/Year	H	• 1985 PG&E On-Site Survey + BR Associates (1989) + Original PG&E Spreadsheet
Diversity	D	• Martin (1991) (PG&E Sunset Building) + Engineering Estimates

Output	Comparison Sources
(EUIs, NPDs, & GWh)	CEC ER90 & ER92 PG&E ER90 & ER92 Pratt et al. (1990) (ELCAP) BR Associates (1989) Nguyen (1988) (CEC88)

Notes:

- • Primary Source
- + Secondary Comparison

Symbols are those used in spreadsheet headings and formulas described in Section III.

ER90 and ER92 are Electricity Reports from 1990 and 1992, which are part of the biannual forecast cycle of electricity use for California.

TABLE 3. COMPONENT NAMEPLATE POWER FROM PG&E ON-SITE SURVEYS AND ELCAP

	All Buildings (N=855) Survey Sample (N)		Small Office (N=118) Rated Power (W)	Small Office Survey Sample (N)	Large Office (N=55) Rated Power (W)	Large Office Survey Sample (N)	ELCAP-LBL (N=119) Rated Power (W)	ELCAP-LBL Median Survey Sample (N)	ELCAP-LBL Median Rated Power (W)
Mains & Minis	118	Avg.	28876	37	77000	20	7191		
		Median	2300		2400		4929		
PCs	213	Avg.	328	62	354	33	247	191	
		Median	250		250		240		300
Printers	107	Avg.	698	41	893	9	764	167	
		Median	294		350		250		290
Mxd Prnt/Cmptr	30	Avg.	438	10	565	1	120		
		Median	220		260		120		
Copiers	271	Avg.	1103	84	1161	16	994	156	
		Median	1000		1200		1000		1380
Fax	3	Avg.	997	3	997	0			
		Median	370		370				
VDTs	64	Avg.	312	32	262	3	83	93	
		Median	100		145		58		140
Other Office	135	Avg.	30501	49	2874	5	244		
		Median	80		95		210		
Typewriters	210	Avg.	139	71	135	30	159	237	
		Median	139		140		135		210
Cash Registers	158	Avg.	164	3	3000	0		88	
		Median	80		3000				270
Other Non-Office	3099	Avg.	6275	314	2857	178	20762		
		Median	1000		908		8674		
Total Observations			4408						
Total (w/out Other Non-Office)			1309						

TABLE 4.A. EQUIPMENT SATURATIONS FOR ALL BUILDINGS

1985 PG&E data - Weighted saturations per building type (units/kft^2)

	SMOFF	LOFF	REST	RETL	GROC	WARE	SCHL	COLL	HOSP	HOTL	MISC	TOT w/o SMOFF
Mains & Minis	0.14	0.03	0.00	0.01	0.00	0.01	0.00	N/A	0.01	0.00	0.01	0.01
PCs	0.53	0.68	0.01	0.09	0.00	0.02	0.40	N/A	0.09	0.07	0.03	0.10
Printers	0.17	0.20	0.00	0.03	0.00	0.00	0.13	N/A	0.05	0.07	0.02	0.04
Copiers	0.21	0.11	0.01	0.05	0.01	0.05	0.11	N/A	0.08	0.00	0.04	0.05
Fax	0.01	0.00	0.00	0.00	0.00	0.00	0.00	N/A	0.00	0.00	0.00	0.00
VDTs	0.53	0.05	0.00	0.06	0.00	0.00	0.01	N/A	0.02	0.00	0.09	0.06
Typewriters	0.62	0.64	0.00	0.02	0.00	0.05	0.49	N/A	0.14	0.00	0.04	0.10
Other Non-Office	0.33	0.07	0.00	0.06	0.00	0.05	0.13	N/A	0.03	0.00	0.04	0.04
Cash Registers	0.01	0.00	0.24	0.11	0.18	0.01	0.02	N/A	0.00	0.00	0.02	0.06

1988 SMUD data - Weighted saturations per building type (units/kft^2)

	SMOFF	LOFF	REST	RETL	GROC	WARE	SCHL	COLL	HOSP	HOTL	MISC	TOT w/o SMOFF
Mains & Minis	0.63	0.63	0.04	0.09	0.02	0.06	0.30	0.30	0.34	0.01	0.05	0.11
PCs	1.72	1.72	0.02	0.24	0.02	0.37	0.72	0.72	0.61	0.07	0.18	0.29
Printers	0.94	0.94	0.01	0.10	0.06	0.21	0.23	0.23	0.55	0.08	0.15	0.20
Copiers	0.27	0.27	0.00	0.06	0.03	0.06	0.06	0.06	0.23	0.01	0.07	0.09
Fax	0.12	0.12	0.00	0.00	0.00	0.03	0.00	0.00	0.18	0.01	0.00	0.03
VDTs	0.55	0.55	0.00	0.06	0.00	0.05	0.15	0.15	0.03	0.06	0.00	0.04
Typewriters	0.97	0.97	0.00	0.05	0.01	0.15	0.36	0.36	0.37	0.02	0.09	0.13
Other Non-Office	0.88	0.88	0.14	0.23	0.11	0.52	0.07	0.07	0.42	0.24	0.14	0.24
Cash Registers	N/A											

SMUD saturations as a fraction of PG&E (SMUD/PG&E)

	SMOFF	LOFF	REST	RETL	GROC	WARE	SCHL	COLL	HOSP	HOTL	MISC	TOT w/o SMOFF
Mains & Minis	4.50	21.00		9.00		6.00			34.00		5.00	11.00
PCs	3.25	2.53	2.00	2.67		18.50	1.80		6.78	1.00	6.00	2.90
Printers	5.53	4.70		3.33			1.77		11.00	1.14	7.50	5.00
Copiers	1.29	2.45		1.20	3.00	1.11	0.55		2.88		1.75	1.80
Fax	12.00											
VDTs	1.04	11.00		1.00			15.00		1.50			0.67
Typewriters	1.56	1.52		2.50		3.00	0.73		2.64		2.25	1.30
Other Non-Office	2.67	12.57		3.83		10.40	0.54		14.00		3.50	6.00

SMOFF and LOFF are same

HOSP based on combination of health and hospital buildings

TABLE 4.B. EQUIPMENT SATURATIONS COMPARED TO SMALL OFFICE

Saturations as a fraction of small office (PG&E data)

	SMOFF	LOFF	REST	RETL	GROC	WARE	SCHL	COLL	HOSP	HOTL	MISC	TOT w/o SMOFF
Mains & Minis	1.00	0.21	0.00	0.07	0.00	0.07	0.00	0.00	0.07	0.00	0.07	0.07
PCs	1.00	1.28	0.02	0.17	0.00	0.04	0.75	0.00	0.17	0.13	0.06	0.19
Printers	1.00	1.18	0.00	0.18	0.00	0.00	0.76	0.00	0.29	0.41	0.12	0.24
Copiers	1.00	0.52	0.05	0.24	0.05	0.26	0.52	0.00	0.38	0.00	0.19	0.24
Fax	1.00	0.00	0.00	0.00	0.00	0.00	0.00	0.00	0.00	0.00	0.00	0.00
VDTs	1.00	0.09	0.00	0.11	0.00	0.00	0.02	0.00	0.04	0.00	0.17	0.11
Typewriters	1.00	1.03	0.00	0.03	0.00	0.08	0.79	0.00	0.23	0.00	0.06	0.16
Other Office	1.00	0.21	0.00	0.18	0.00	0.15	0.39	0.00	0.09	0.00	0.12	0.12
Cash Registers	1.00	0.00	24.00	11.00	18.00	1.00	2.00	0.00	0.00	0.00	2.00	6.00

Saturations as a fraction of small office (SMUD data)

	SMOFF	LOFF	REST	RETL	GROC	WARE	SCHL	COLL	HOSP	HOTL	MISC	TOT w/o SMOFF
Mains & Minis	1.00	1.00	0.06	0.14	0.03	0.10	0.48	0.48	0.54	0.02	0.08	0.17
PCs	1.00	1.00	0.01	0.14	0.01	0.22	0.42	0.42	0.35	0.04	0.10	0.17
Printers	1.00	1.00	0.01	0.11	0.06	0.22	0.24	0.24	0.59	0.09	0.16	0.21
Copiers	1.00	1.00	0.00	0.22	0.11	0.22	0.22	0.22	0.85	0.04	0.26	0.33
Fax	1.00	1.00	0.00	0.00	0.00	0.25	0.00	0.00	1.50	0.08	0.00	0.25
VDTs	1.00	1.00	0.00	0.11	0.00	0.09	0.27	0.27	0.05	0.11	0.00	0.07
Typewriters	1.00	1.00	0.00	0.05	0.01	0.15	0.37	0.37	0.38	0.02	0.09	0.13
Other Office	1.00	1.00	0.16	0.26	0.13	0.59	0.08	0.08	0.48	0.27	0.16	0.27
Cash Registers	N/A											

Ratio of PG&E fraction of small office to SMUD fractions (PG&E/SMUD)

	SMOFF	LOFF	REST	RETL	GROC	WARE	SCHL	COLL	HOSP	HOTL	MISC	TOT w/o SMOFF
Mains & Minis	1.00	0.21	0.00	0.50	0.00	0.75	0.00	0.00	0.13	0.00	0.90	0.41
PCs	1.00	1.28	1.62	1.22	0.00	0.18	1.80	0.00	0.48	3.25	0.54	1.12
Printers	1.00	1.18	0.00	1.66	0.00	0.00	3.13	0.00	0.50	4.84	0.74	1.11
Copiers	1.00	0.52		1.07	0.43	1.16	2.36	0.00	0.45	0.00	0.73	0.71
Fax	1.00	0.00				0.00			0.00	0.00		0.00
VDTs	1.00	0.09		1.04		0.00	0.07	0.00	0.69	0.00		1.56
Typewriters	1.00	1.03		0.63	0.00	0.52	2.13	0.00	0.59	0.00	0.70	1.20
Other Office	1.00	0.21	0.00	0.70	0.00	0.26	4.95	0.00	0.19	0.00	0.76	0.44
Cash Registers	N/A											

TABLE 5. COMPARISON OF NAMEPLATE POWER AND SATURATIONS FOR SMALL OFFICES

	N Nameplt Power (W)	P (Prsn/ Unit)	S Saturtn (Units/ kft^2)
Mains & Minis			
ELCAP-LBL	N/A		
BR-86 (1)	1520	8.0	0.46
PG&E-F (2)	see note		
PG&E-S (L)	4929 to 7191	39.0	0.14
SMUD-88	N/A	N/A	0.63
LBL-85	5600	78.1	0.07
LBL-88	5000	58.5	0.09
PCs			
ELCAP-LBL	N/A		
BR-86 (3)	196	10.0	0.37
PG&E-F	395	1.5	3.70
PG&E-S (A)	250	10.3	0.53
SMUD-88	N/A	N/A	1.72
LBL-85	250	6.6	0.83
LBL-88	325	3.2	1.72
VDTs			
ELCAP-LBL	140		
BR-86	196	7.1	0.52
PG&E-F	N/A	N/A	N/A
PG&E-S (S)	145	10.3	0.53
SMUD-88	N/A	N/A	0.55
LBL-85	170	15.3	0.36
LBL-88	150	9.9	0.55
Copiers			
ELCAP-LBL	1380		
BR-86	1430	14.2	0.26
PG&E-F	1020	182.2	0.03
PG&E-S	1200	26.0	0.21
SMUD-88	N/A	N/A	0.27
LBL-85	1200	28.6	0.19
LBL-88	1100	20.2	0.27

	N Nameplt Power (W)	P (Prsn/ Unit)	S Saturtn (units/ kft^2)
Printers			
ELCAP-LBL	290		
BR-86	150	2.1	1.76
PG&E-F	93	1.3	4.13
PG&E-S (A)	294	32.0	0.17
SMUD-88	N/A	N/A	0.94
LBL-85	300	18.2	0.30
LBL-88	350	5.8	0.94
Fax			
ELCAP-LBL	N/A		
BR-86	200	10.0	0.37
PG&E-F	300	911.8	0.01
PG&E-S	N/A	546.4	0.01
SMUD-88	N/A	N/A	0.12
LBL-85	250	282.8	0.02
LBL-88	300	45.5	0.12
Typewriters			
ELCAP-LBL	210		
BR-86	153	4.5	0.82
PG&E-F	N/A	N/A	N/A
PG&E-S (A)	139	8.8	0.62
SMUD-88	N/A	N/A	0.97
LBL-85	130	6.5	0.84
LBL-88	110	5.6	0.97

	SP (ft^2/ Psrn)
Occupancy	
BR	271
PG&E-F	183
PG&E-S	171
SMUD-88	N/A
LBL-85 & -88	183
CBECS	425

(1) BR used 1520 W for small offices, and 10,900 W for large.
(2) PG&E-F had Mains at 25,000 W and Minis at 8000 W.
(3) BR PCs and VDTs combined.
(4) BR Fax data are for 1987 because the study estimated there were no faxes in place in 1986. See text for further notes on data sources.
N/A - not available.
PG&E-S (A) - All buildings; (L) Large office, (S) Small office.

TABLE 6. COMPARISON OF OPERATING DATA FOR SMALL OFFICES

		H (Hrs/Year)	A (Avg/Rated Power)	D (Diversity)	U (Utilization) (U=H*A*D/8760)
Mains & Minis					
	ELCAP				0.99
	BR				0.24
	PG&E-F	8652	0.50		0.49
	PG&E-S	5913			
	LBL	8760	0.50	0.65	0.33
PCs					
	ELCAP				0.19
	BR				0.20
	PG&E-F	1920	0.50		0.11
	PG&E-S	2876			
	LBL	2900	0.33	0.50	0.05
VDTs					
	ELCAP				
	BR				0.20
	PG&E-F				
	PG&E-S	3624			
	LBL	3600	0.85	0.50	0.17
Copiers					
	ELCAP				
	BR				0.19
	PG&E-F	2450	0.50		0.14
	PG&E-S	1004			
	LBL	8760	0.20	0.35	0.07
Printers					
	ELCAP				
	BR				0.20
	PG&E-F	1920	0.33		0.07
	PG&E-S	2025			
	LBL	2000	0.33	0.40	0.03
FAX					
	ELCAP				
	BR				0.19
	PG&E-F	8652	0.33		0.33
	PG&E-S				
	LBL	8760	0.33	0.20	0.07
Typewriters					
	ELCAP				
	BR				0.19
	PG&E-F				
	PG&E-S	1806			
	LBL	1300	0.85	0.50	0.06

ELCAP data from Pratt et al. (1990).
BR data for 1986, study assumed changes in U over time.
PG&E-F data from early spreadsheet forecast.
PG&E-S data from LBL analysis of 1985 on-site survey data.
LBL data show values used in LBL spreadsheet, fixed in time.

TABLE 7. COMPARISON OF NAMEPLATE POWER DENSITY (W/ft^2) DATA FOR LARGE OFFICES FROM SEVERAL STUDIES.

	PG&E-F 1983	PG&E-F 1986	PG&E-F 1994	CEC89 1987	CEC89 1994	CEC88	BR 1986	ELCAP 1986	LBL 1983	LBL 1986	LBL 1994
Mains & Minis	0.03	0.01	0.00						0.27	0.42	0.44
PCs	0.89	1.61	3.22						0.02	0.30	1.08
Total Computers	0.92	1.62	3.22						0.29	0.72	1.52
Printers	0.37	0.40	0.96						0.02	0.15	0.81
Total Computers & Printers	1.29	2.02	4.18				0.62	0.87	0.31	0.87	2.33
Copiers	0.03	0.03	0.04						0.17	0.26	0.36
Fax	0.00	0.01	0.02						0.00	0.01	0.22
Additional Misc.	0.01	0.02	0.06						0.16	0.18	0.23
Total Copiers, Fax, Misc.	0.05	0.05	0.12				0.68	0.66	0.33	0.45	0.81
Total Office Equipment	1.34	2.07	4.30	0.32	0.69	N/A	1.30	1.53	0.64	1.32	3.14

CEC89 data from Table 5 in CEC Doc. No. 88-ER-8, Oct. 1989.
LBL data from spreadsheet output.
ELCAP from Pratt et al. (1990).

TABLE 8. COMPARISON OF ENERGY-USE INTENSITY (kWh/ft^2) DATA FOR LARGE OFFICES FROM SEVERAL STUDIES

	PG&E-F 1983	PG&E-F 1986	PG&E-F 1994	CEC89 1987	CEC89 1994	CEC88	BR 1986	ELCAP 1986	LBL 1983	LBL 1986	LBL 1994	Prelim ER-92 PG&E 1994	Prelim ER-92 CEC 1994
Mains & Minis	0.13	0.04	0.02				0.62		0.78	1.20	1.26		
PCs	0.86	1.54	3.09				0.23		0.01	0.14	0.52		
Total Computers	0.99	1.58	3.11				0.85		0.79	1.34	1.78		
Printers	0.24	0.25	0.61				0.09		0.01	0.04	0.21		
Total Computers & Printers	1.22	1.84	3.72			3.01	0.94	3.05	0.80	1.38	1.99		
Copiers	0.04	0.04	0.05				0.56		0.10	0.16	0.22		
Fax	0.01	0.02	0.04				0.00		0.00	0.00	0.13		
Additional Misc.	0.02	0.02	0.06				0.70		0.12	0.17	0.24		
Total Copiers, Fax, Misc.	0.07	0.07	0.15			0.35	1.26	0.84	0.22	0.33	0.59		
Total Office Equipment	1.29	1.91	3.87	0.65	1.38	3.35	2.20	3.89	1.02	1.71	2.58	5.32	9.61

BR data for PCs includes VDTs
CEC88 data from Nguyen et al. 1988, DTP, OFF, & ENT categories
ELCAP from Pratt et al. (1990).

TABLE 9. COMPARISON OF NAMEPLATE POWER DENSITY (W/ft^2) DATA FOR SMALL OFFICES FROM SEVERAL STUDIES

	PG&E-F 1983	PG&E-F 1986	PG&E-F 1994	CEC89 1987	CEC89 1994	CEC88	BR 1986	ELCAP 1986	LBL 1983	LBL 1986	LBL 1994
Mains & Minis	0.01	0.00	0.00						0.27	0.42	0.44
PCs	0.72	1.47	3.69						0.02	0.30	1.08
Total Computers	0.73	1.48	3.69						0.29	0.72	1.52
Printers	0.30	0.70	2.18						0.02	0.15	0.81
Total Computers & Printers	1.03	2.17	5.87				0.64	0.45	.31	0.87	2.33
Copiers	0.02	0.33	2.51						0.17	0.26	0.36
Fax	0.00	0.02	0.61						0.00	0.01	0.22
Additional Misc.	0.01	0.04	1.90						0.16	0.18	0.23
Total Copiers, Fax, Misc.	0.02	0.39	5.02				0.65	0.73	0.33	0.45	0.81
Total Office Equipment	1.05	2.57	10.89	0.34	0.73	N/A	1.29	1.18	0.64	1.32	3.14

ELCAP from Pratt et al. (1990).

TABLE 10. COMPARISON OF ENERGY-USE INTENSITY (kWh/ft^2-yr) DATA FOR SMALL OFFICES FROM SEVERAL STUDIES

	PG&E-F 1983	PG&E-F 1986	PG&E-F 1994	CEC89 1987	CEC89 1994	CEC88	BR 1986	ELCAP 1986	LBL 1983	LBL 1986	LBL 1994	Prelim ER-92 PG&E 1994	Prelim ER-92 CEC 1994
Mains & Minis	0.06	0.02	0.00				0.55		0.78	1.20	1.26		
PCs	0.69	1.41	3.54				0.26		0.01	0.14	0.52		
Total Computers	0.75	1.43	3.54				0.81		0.79	1.34	1.78		
Printers	0.19	0.44	1.38				0.09		0.01	0.04	0.21		
Total Computers & Printers	0.94	1.87	4.93			5.26	0.90	2.04	0.80	1.38	1.99		
Copiers	0.02	0.41	3.08				0.52		0.10	0.16	0.22		
Fax	0.00	0.05	1.74				0.00		0.00	0.00	0.13		
Additional Misc.	0.01	0.06	2.65				0.62		0.12	0.17	0.24		
Total Copiers, Fax, Misc.	0.03	0.52	7.47			0.36	1.14	0.93	0.22	0.33	0.59		
Total Office Equipment	0.97	2.40	12.40	0.68	1.46	5.62	2.04	2.97	1.02	1.71	2.58	N/A	9.4

ELCAP from Pratt et al. (1990).

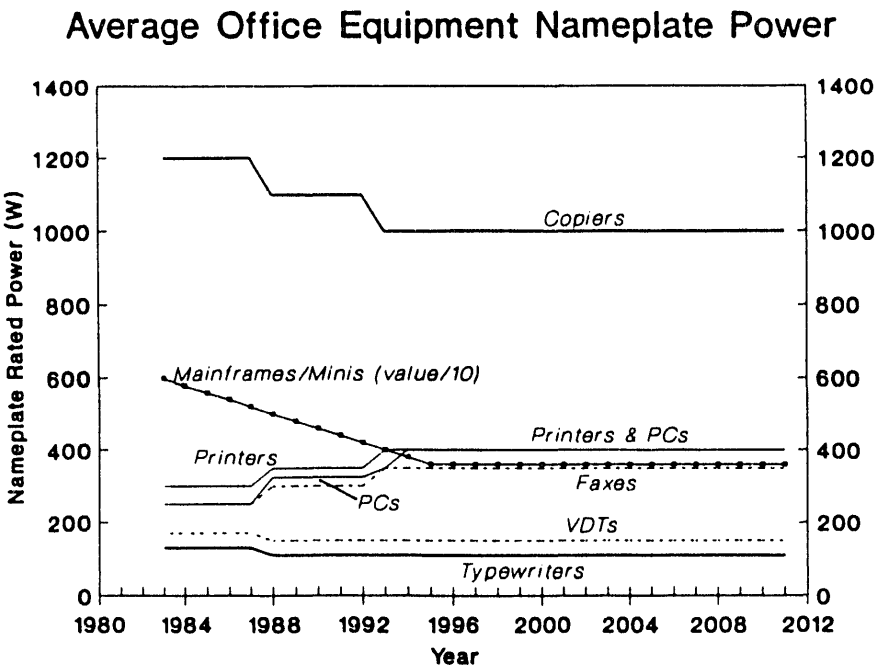

Figure 1. Average Annual Equipment Nameplate Power Rating. Nameplate power ratings input into the spreadsheet. Power ratings are fixed at 1995 values for 1996 through 2011. The power rating for the mainframes and mini-computer category is shown as one-tenth of the input value. PCs and printers power rating is equivalent beyond 1993.

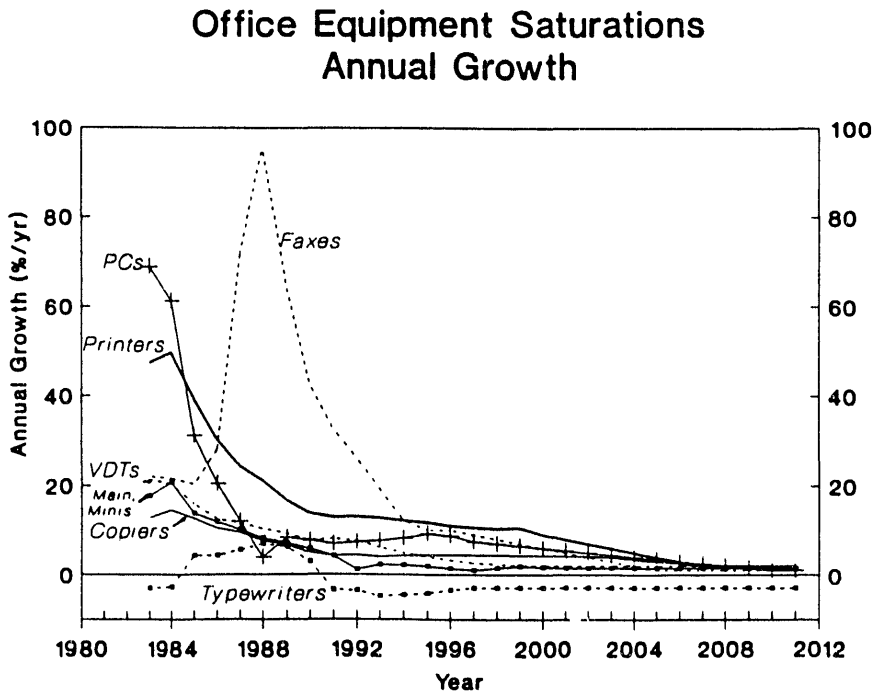

Figure 2. Annual Growth in Office Equipment Saturations. Growth rates starting in 1983 are derived from CBEMA (1991) sales projections. Equipment lives were assumed to be 6 years except PCs (4 year) and mainframe and mini-computers (8 years). The base year commercial building equipment saturations are derived from 1988 SMUD data. The figure shows high equipment growth rates in 1980s, slowing in the 1990s and beyond.

Small Offices:

Calculation of Office Equipment Energy Use For Each Component

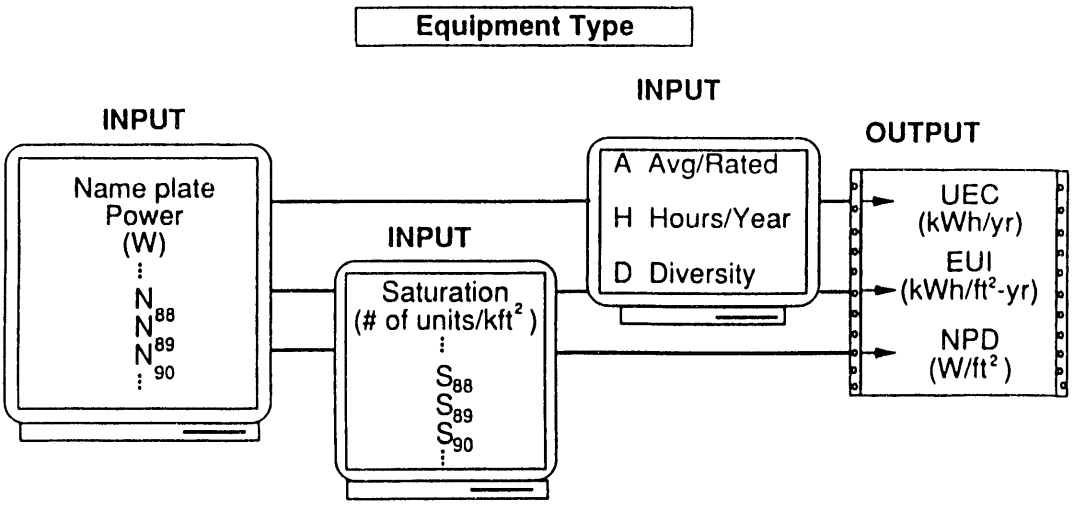

Figure 3. Calculation of Energy Use for Each Equipment Type. Five input parameters are used to derive the key three output parameters. Within the spreadsheet design the nameplate power (W) and saturation (units/kft^2) change in time and the operating data (A, H, and D) are fixed in time.

Small Offices:

Total Calculation of Office Equipment Energy Use

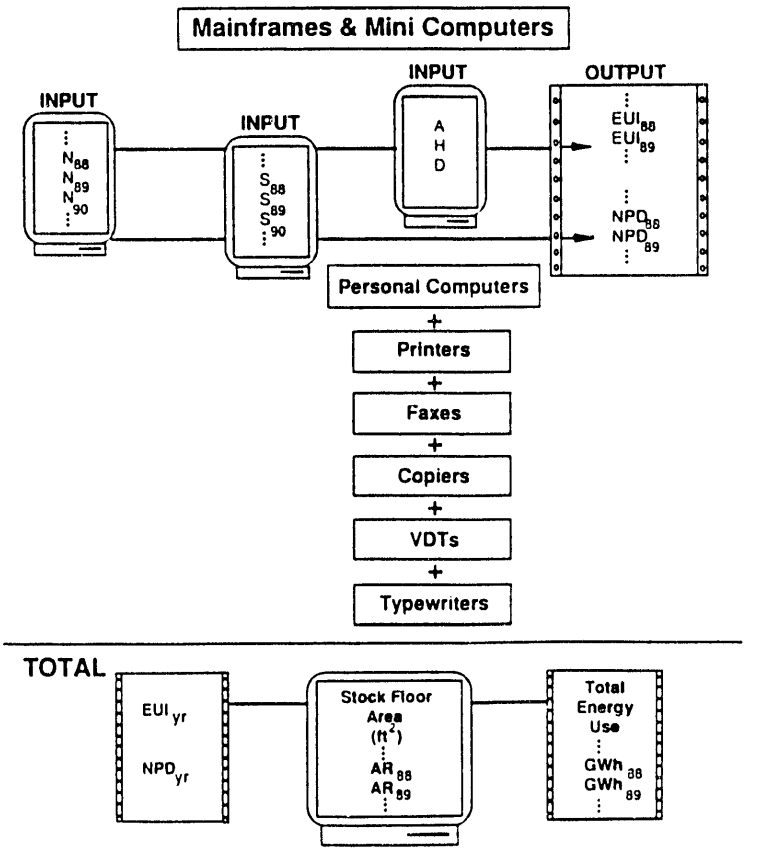

Figure 4. Calculation of Office Equipment Energy Use for Small Office Prototype. Five input parameters are used to uniquely model the energy use of seven categories of equipment.

All Building Types:

Calculation of Office Equipment Energy Use

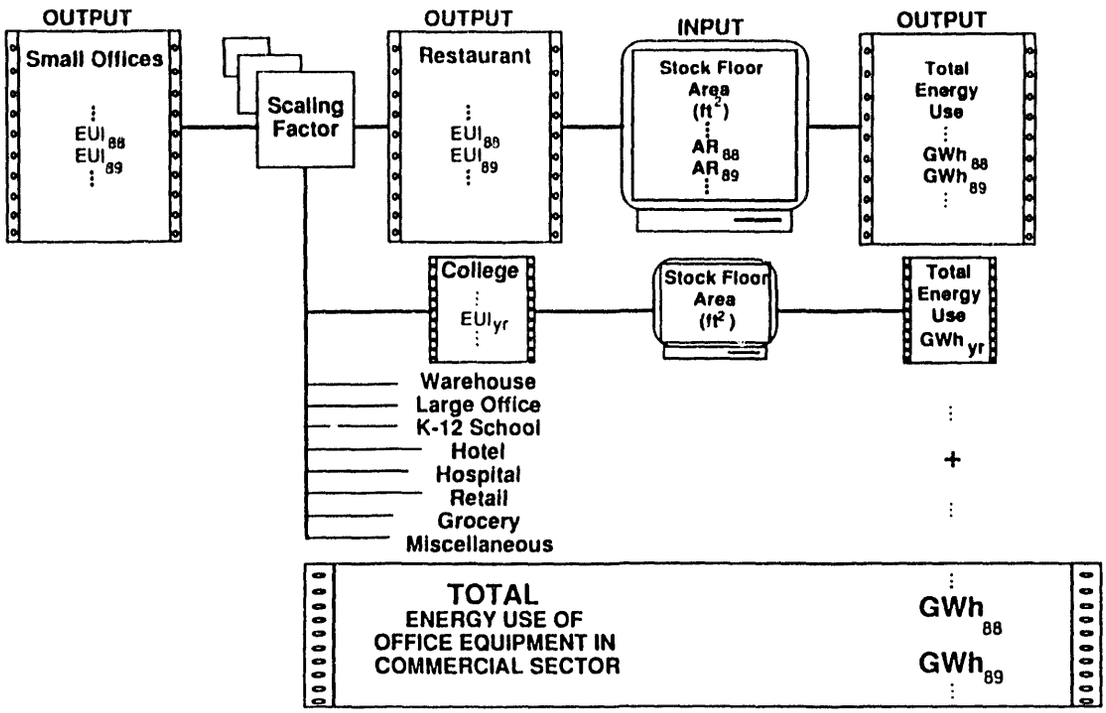

Figure 5. Calculation of Office Equipment Energy Use for Eleven Building Types and Total Commercial Sector GWh. The office equipment EUIs for each equipment category are scaled down from the small office prototype to the the other building types using 1988 SMUD office equipment saturations. Total annual energy use for the commercial sector is derived from the product of the EUIs and annual floor space projections.

Total Office Equipment Nameplate Power Density (NPD) for Office Buildings

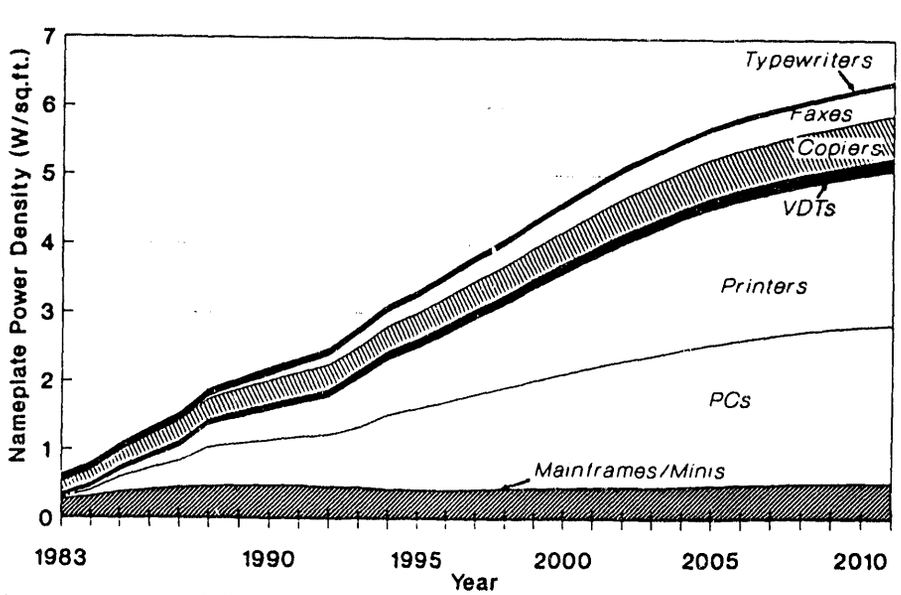

Figure 6. Average Annual Office Equipment Nameplate Power Density (NPD) for Office Buildings. The estimated total NPD starts in 1983 at 0.65 W/ft^2, and reaches 6.40 W/ft^2 in 2011. The growth in the number (saturation) and unit nameplate power ratings (W/unit) of the PC and printer equipment dominate the growth in installed power density.

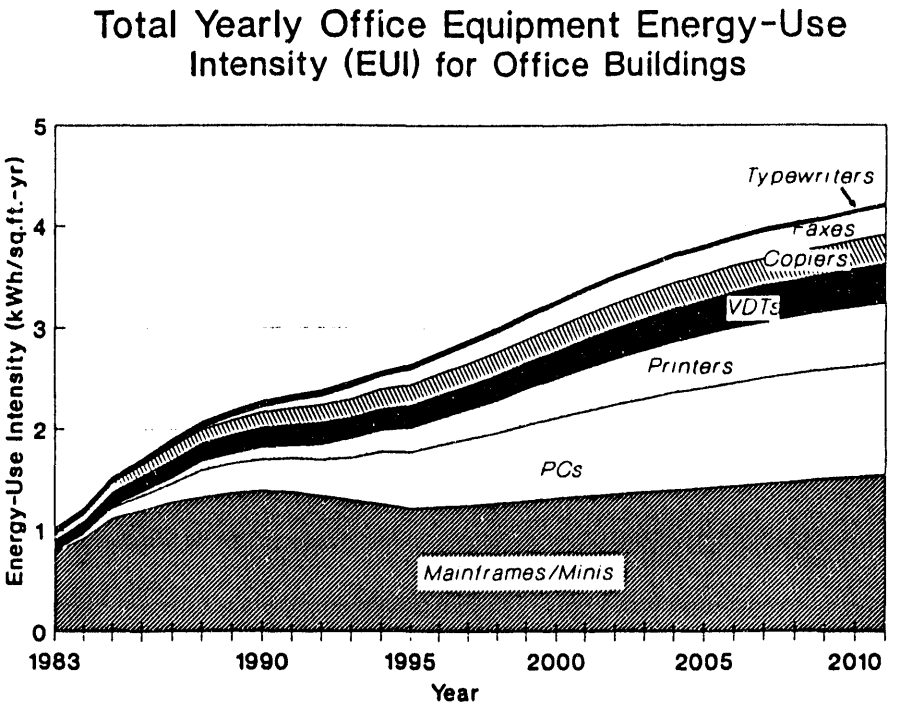

Figure 7. Annual Office Equipment Energy-Use Intensity (EUI) for Office Buildings. The estimated total EUI starts in 1983 at 1.03 kWh/ft^2-year and reaches 4.22 kWh/ft^2-year in 2011. The growth in the number (saturation) and unit nameplate power ratings (W/unit) of the PC and printer equipment dominate the growth in EUI.

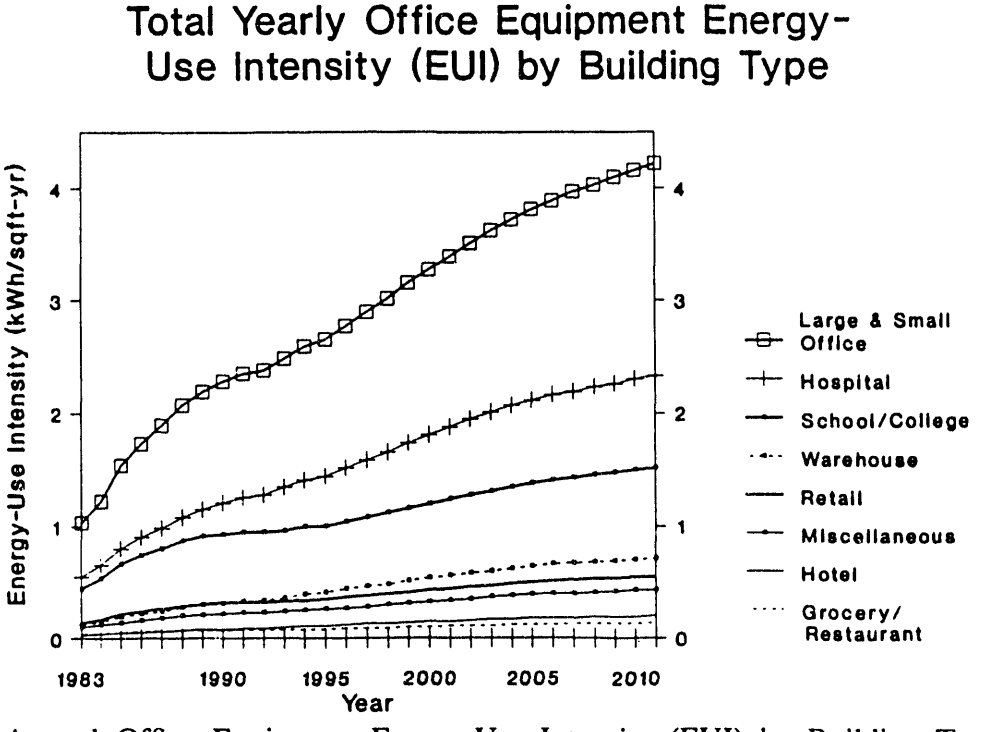

Figure 8. Annual Office Equipment Energy-Use Intensity (EUI) by Building Type. Office buildings (large and small are modeled identically) have the highest office equipment EUI, reaching 4.22 kWh/ft^2-year by 2011, followed by hospitals and schools (K-12). College EUIs are identical to schools because of the lack of equipment saturation data in colleges. Grocery and restaurant EUIs are also shown as identical, though the grocery EUI is slightly greater in later years. The restuarant EUI starts at 0.05 kWh/ft^2-year in 1983 and reaches 0.11 kWh/ft^2-year in 2011. The grocery EUI starts at 0.04 kWh/ft^2-year in 1983 and reaches 0.14 kWh/ft^2-year in 2011.

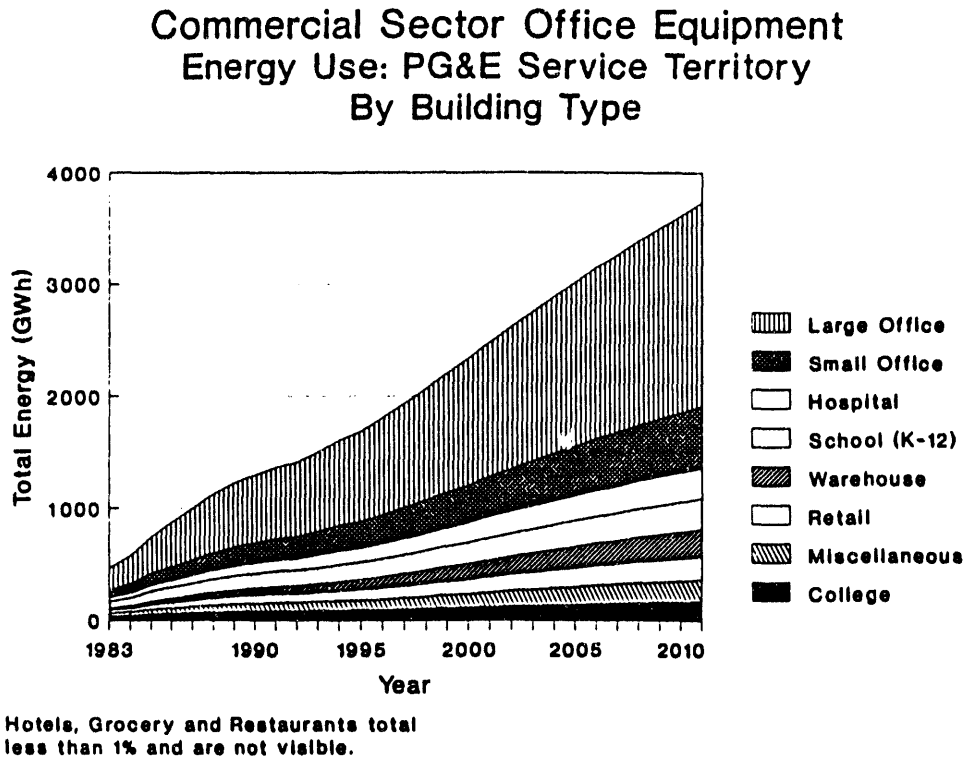

Figure 9. Total Annual Commercial Sector Office Equipment Energy Use by Building Type for the PG&E Service Territory. Office equipment energy use in large offices accounts for 42% of the total energy use of office equipment in 1983, increasing to 48% by 2011.

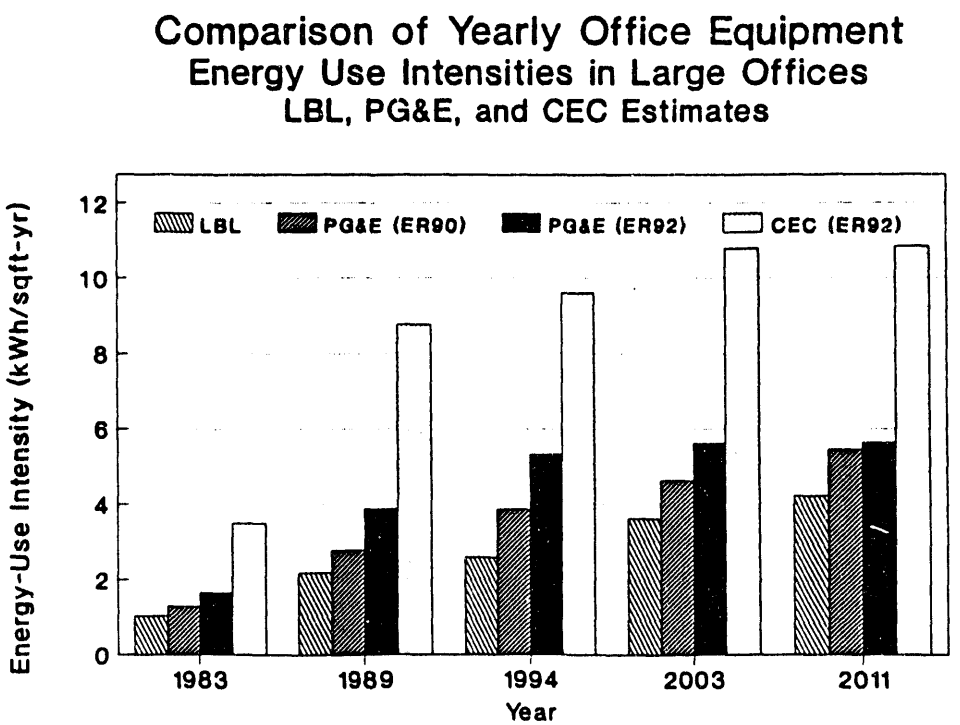

Figure 10. Comparison of Office Equipment Energy Use Intensities in Large Offices: LBL, PG&E, and CEC Estimates. The CEC ER92 (preliminary) estimate climbs more quickly than the LBL and PG&E (ER90 and preliminary ER92) estimates. (Note that the years shown are not equally spaced chronological periods.)

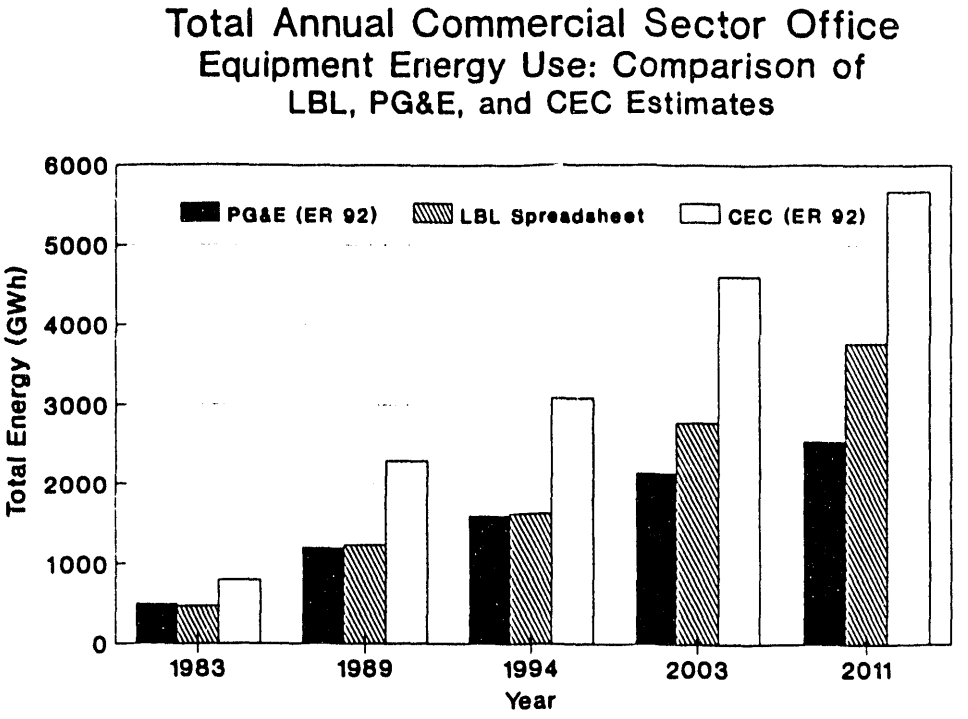

Figure 11. Total Annual Commercial Sector Office Equipment Energy Use for the PG&E Service Territory: Comparison of LBL, PG&E, and CEC Estimates. The PG&E and CEC ER92 estimates are preliminary filings. Unlike with the EUIs, where the LBL estimate is below both the CEC and PG&E estimates, the spreadsheet output falls between the CEC and PG&E estimates because the LBL spreadsheet has higher EUIs in other building types than the PG&E estimate. (Note that the years shown are not equally spaced chronological periods.)

XI. APPENDICES

XI.A. Equipment Definitions in PG&E on-site surveys

The on-site survey contained space for up to eleven categories of miscellaneous equipment. We reviewed the names in each of the listings and used SAS to examine the miscellaneous office equipment. Building and equipment data examined included:

Building id (unique building identifier)
Premise code (building type)
Gross audited area (sqft)
Year built
Total standard day building occupancy (number of people)
Annual hours of operation (hours/year for each piece of equipment)
Number of pieces of equipment (quantity per building)
Total nameplate power (W)
Equipment name (alphanumeric label)

The eleven categories of equipment are as follows:

1. Mainframes - Multi-user computing systems listed as components of or aggregate main frame computing systems. When the computer system was unclear, we used a breakpoint of 600 W to divide between personal and multi-user systems.
2. Personal Computers - Single user systems, or general computing systems under 600 W.
3. Printers - All types of printers
4. Printer/Computer - Thirty listings were labeled "mixed Printer/Computer". These data were used to track saturations, not nameplate power.
5. Copiers - All types of copiers, not including mimeographs or ditto machines.
6. Fax - Only three were reported.
7. VDT - Video display terminals.
8. Miscellanous Office Equipment
9. Typewriters
10. Cash registers
11. Other - any other equipment listed in the survey.

The equipment names used to assign the equipment to one of the above categories is as follows (note that the list is a direct listing from the auditor labels, including several typographical errors and questionmarks):

1. Mainframe and minicomputers

CENT. PROC. UNIT	CENTRAL COMPUTER	CENTRAL PROC. UNIT
CENTRAL PROC. UNITS	CENTRAL PROCESSORS	CPU
DIGITAL COMPUTER	IBM MAIN FRAMES	IBM PROCESSORS
MAIN COMPUTER	MAIN COMPUTER SYSTEM	MAIN FRAME COMPUTERS
MAIN FRAME EQUIPMENT	MAINFRAME	MAINFRAME COMPUTER
MAINFRAME EQUIP.	MAINFRAME MEMORIES	MAINFRAME SYSTEM
PDP DIGITAL PROC.	TAPE DRIVE	TAPE DRIVES
VAX DISC	COMPUTER DISK DRIVE	DISC DRIVES?
DISK DRIVE	DISK DRIVES	MAGNETIC DISK DRIVE
MEMORY DISK DRIVES	COMPUTER PROCESSORS	COMPUTER ROOM
IBM SYSTEMS	COMPUTER ANALYZER	COMPUTER TUNER
COURIER COMPUTER	ELECTRONIC PROC.EQMT	MARKET COMPUTERS
NETWORK SYSTEM		

1&2. General computing systems assigned to category 1 or 2 by nameplate power division of 600 W.

COMPTERS	COMPUTERS	COMPUTER
COMPUTER/CRT	COMPUTER DRIVE	COMPUTER EQUIPMENT
COMPUTER/MODES	COMPUTER SYSTEM	COMPUTER SYSTEMS
CONTROL COMP.	DATA PROCESSING	DATA PROCESSORS
DIGITAL DATA SYSTEM	PARADYNE UP 9600	PROCESSING EQUIPMENT
PROCESSOR	PROCESSORS	TAPE DRIVE/COMPUTERS

2. Personal Computers

ADM PERSONAL COMPUTR	APPLE COMPUTER	COMPUTERS (PC)
COMPUTERS P.C.	IBM PERSONAL COMPUTR	MICRO COMPUTERS
MICRO-COMPUTERS	MINI COMPUTERS	P.C.
PC COMPUTERS	PC	PERSONAL COMP/TERM.
PERSONAL COMPTER	PERSONAL COMPUTER	PERSONAL COMPUTERS
PERSONNEL COMPUTER	PERSONNEL COMPUTERS	WORD PROCESSORS
COMPUTER SYSTEMS	P.C. DRIVE	P.C. WITH DRIVE
PC TERMINALS	TERMINAL/P.C.?	MICRO SYSTEM

3. Printer

COMPUTER PRINTER	COMPUTER PRINTERS	COMPUTER PRINTOUT
DATA POINT	DATA POINT PRINTERS	IBM PRINT-OUT
MASTER PRINTER	PRINT MACHINE	PRINT OUT
PRINT-OUT	PRINTER	PRINTERS
PRINTING MACHINE	READER PRINTER	LASER PRINTERS
PRINTERS/COPIERS	PRINTERS/TYPEWRITERS	

4. Mixed computer and printer

COMPUTERS & PRINTERS	COMPUTERS/PRINTERS	P.C./PRINTER
P/C AND PRINTER	PC & PRINTERS	PC WITH PRINTER
PC/PRINTER	PC/PRINTERS	PRINTER/COMPUTERS
PRINTER/TERMINAL	TERMINAL/PRINTER	TERMINALS/PRINTERS
TV/PRINTER/COMPUTERS	TYPEWRITER/PC/PRINT	

5. Copier

COPIER	COPIER MACHINE	COPIER/SORTER
COPIERS	COPIERS (SMALL)	COPY MACHINE
COPY MACHINES	COPYING MACHINE	COPYING MACHINES
DUPLICATOR	LARGE COPIERS	MICRO COPIER
PHOTO COPIER	PHOTO COPIERS	ROYAL COPIER
SMALL COPIERS	XEROX COPIER	XEROX MACHINE
COPIER & COFFEE MACH	COPIER/SENDERS	COPIER/STENSEL MKRS.
COPIERS/TYPEWRITERS		

6. Fax FAX TELECOPIER

7. VDTs

COMP. TERMINALS	COMPUTER MONITOR	COMPUTER TERMINAL
COMPUTER TERMINALS	CRT	CRT
CRTS	IBM TERMINALS	KEYBOARD
MAINFRAME TERMINALS	MONITOR/DISPATCH	MONITORS
TERMINAL	TERMINAL 200	TERMINALS
VIDEO DISPLAY TERM.	VIDEO TERMINALS	TERMINAL/TYPEWRITERS
TYPEWRITER/TERMINALS	TYPEWRITER&TERMINALS	

8. Miscellaneous, none of the above, but clearly office equipment

ABDICK PRINTER	ADDING MACHINE	ADDING MACHINES
CALCULATOR	CALCULATORS	CHECK COPIER
CLERICAL EQUIPMENT	COLLATOR	FOLDER
FOLDERS	KEY PUNCH MACHINES	LETTER SORTING MACH.
MISC. MAIL PROC.EQPT	MODEM	OFFICE EQUIPMENT
PAPER SHREDDER	PRIMARY SORT MACH.	READER SORTER
SHREDDER	SHREDDER, SHEARS	SHREDDERS
SHREEDER	SORTER	SORTERS
TRANSPARENCY	COPY CAKE MACHINES	DIDO MACHINES
DITTO MACHINE	DITTO MACHINES	MIMEOGRAPH
BLUELINE MACHINE?	BLUEPRINT MACHINE?	MICRO FICH
MICRO FILE	MICRO FISCH	MICRO FISCH READER
MICRO/REF	MICROFICH	MICROFICHE
MICROFICHE READER	MICROFICHS	MICROFISCH
MICROFISCH VIEWER	MICROFISH EQUIPMENT	BANK TELLERS
SCREEN		

9. Typewriters

TYEPWRITERS	TYEWRITERS	TYPEWRITER
TYPEWRITERS	TYPEWRITTER	TYPEWRITTERS
MICROFICH/TYPEWRITER	ELEC. TYPEWRITER	ELEC. TYPEWRITERS
ELECTRIC TYPEWRITER	ELECTRIC TYPEWRITERS	

10. Cash Registers

CAH REGISTER	CASH	CASH REGISTER
CASH REGISTERS	CASH REGISTERS	COMPUTER & REGISTER
NCR	REGISTER	REGISTERS

XI. APPENDICES

XI.B. Spreadsheet Print-Out

SPREADSHEET FOR FORECASTING ELECTRICITY USE OF OFFICE EQUIPMENT

Input Parameters: Static: A,D,H,SP
Dynamic: N,ST,AR,S

Confidence Level: H-High, M-Medium, L-Low

Output Parameters: Dynamic:
P=1000/(S*SP)
UEC=A*D*H*N/1000
NPD=1000/(S*N)
EUI=A*D*H*EPD/1000
GWH=EUI*AR

Data Source: B-Benchmarked, E-Estimated, F-Forecasted from CBEMA

General Assumptions
SP Sqft/Person 183

Small Office

INPUT			Conf Level	Year	N Nameplt Rated Power (W)	Conf Level & Src	S Saturation (Units/ksqft)	Conf Level & Src	ST Stock Change (%/yr)	OUTPUT P # of (Prsn /Unit)	UEC Unit kWh/yr	NPD Power Dens (W/sqft)	EUI (kWh/sqft-yr)	Conf Level
1 MAINS & MINIS				1983	6000	L E	0.05	L F	17.7	119.8	17082	0.27	0.78	L
A	Avg/Rated W	0.50	L	1984	5800	L E	0.06	L F	20.8	98.6	16513	0.32	0.92	L
D	Diversity	0.65	L	1985	5600	M B	0.07	M B	13.8	78.1	15943	0.39	1.12	M
H	Hrs/Yr	8760	M	1986	5400	L E	0.08	L F	11.9	69.8	15374	0.42	1.20	L
				1987	5200	L E	0.09	L F	10.2	63.3	14804	0.45	1.28	L
				1988	5000	L E	0.09	L F	8.3	58.5	14235	0.47	1.33	L
				1989	4800	L E	0.10	L F	7.1	54.6	13666	0.48	1.37	L
				1990	4600	L E	0.11	L F	5.9	51.5	13096	0.49	1.39	L
				1991	4400	L E	0.11	L F	4.2	49.5	12527	0.49	1.38	L
				1992	4200	L E	0.11	L F	1.2	48.9	11957	0.47	1.34	L
				1993	4000	L E	0.11	L F	2.3	47.8	11388	0.46	1.30	L
				1994	3800	L E	0.12	L F	2.2	46.7	10819	0.44	1.26	L
				1995	3600	L E	0.12	L F	1.9	45.9	10249	0.43	1.22	L
				1996	3600	L E	0.12	L F	1.4	45.2	10249	0.43	1.24	L
				1997	3600	L E	0.12	L F	1.0	44.8	10249	0.44	1.25	L
				1998	3600	L E	0.12	L F	1.5	44.1	10249	0.45	1.27	L
				1999	3600	L E	0.13	L F	1.9	43.3	10249	0.45	1.29	L
				2000	3600	L E	0.13	L F	1.7	42.6	10249	0.46	1.32	L
				2001	3600	L E	0.13	L F	1.6	41.9	10249	0.47	1.34	L
				2002	3600	L E	0.13	L F	1.5	41.3	10249	0.48	1.36	L
				2003	3600	L E	0.13	L F	1.5	40.7	10249	0.48	1.38	L
				2004	3600	L E	0.14	L F	1.5	40.1	10249	0.49	1.40	L
				2005	3600	L E	0.14	L F	1.5	39.5	10249	0.50	1.42	L
				2006	3600	L E	0.14	L F	1.5	38.9	10249	0.51	1.44	L
				2007	3600	L E	0.14	L F	1.5	38.3	10249	0.51	1.46	L
				2008	3600	L E	0.14	L F	1.5	37.8	10249	0.52	1.48	L
				2009	3600	L E	0.15	L F	1.5	37.2	10249	0.53	1.51	L
				2010	3600	L E	0.15	L F	1.5	36.7	10249	0.54	1.53	L
				2011	3600	L E	0.15	L F	1.5	36.1	10249	0.54	1.55	L
2 PCs				1983	250	L E	0.10	L F	68.9	54.8	120	0.02	0.01	L
A	Avg/Rated W	0.33	M	1984	250	L E	0.32	L F	61.3	17.1	120	0.08	0.04	L
D	Diversity	0.50	L	1985	250	M B	0.83	L F	31.1	6.6	120	0.21	0.10	M
H	Hrs/Yr	2900	M	1986	250	H E	1.20	L F	20.5	4.5	120	0.30	0.14	M
				1987	250	M E	1.51	M F	12.1	3.6	120	0.38	0.18	M
				1988	325	L E	1.72	H B	3.9	3.2	156	0.56	0.27	M
				1989	325	L E	1.86	M F	8.4	2.9	156	0.61	0.29	M
				1990	325	L E	2.01	L F	7.8	2.7	156	0.65	0.31	L
				1991	325	L E	2.15	L F	7.0	2.5	156	0.70	0.33	L
				1992	325	L E	2.31	L F	7.3	2.4	156	0.75	0.36	L
				1993	350	L E	2.49	L F	7.7	2.2	167	0.87	0.42	L
				1994	400	L E	2.69	L F	8.3	2.0	191	1.08	0.52	L
				1995	400	L E	2.94	L F	9.3	1.9	191	1.18	0.56	L
				1996	400	L E	3.20	L F	8.7	1.7	191	1.28	0.61	L
				1997	400	L E	3.44	L F	7.5	1.6	191	1.38	0.66	L
				1998	400	L E	3.68	L E	7.0	1.5	191	1.47	0.70	L
				1999	400	L E	3.92	L E	6.5	1.4	191	1.57	0.75	L
				2000	400	L E	4.15	L E	6.0	1.3	191	1.66	0.79	L
				2001	400	L E	4.38	L E	5.5	1.2	191	1.75	0.84	L
				2002	400	L E	4.60	L E	5.0	1.2	191	1.84	0.88	L
				2003	400	L E	4.81	L E	4.5	1.1	191	1.92	0.92	L
				2004	400	L E	5.00	L E	4.0	1.1	191	2.00	0.96	L
				2005	400	L E	5.17	L E	3.5	1.1	191	2.07	0.99	L
				2006	400	L E	5.33	L E	3.0	1.0	191	2.13	1.02	L
				2007	400	L E	5.46	L E	2.5	1.0	191	2.19	1.05	L
				2008	400	L E	5.57	L E	2.0	1.0	191	2.23	1.07	L
				2009	400	L E	5.66	L E	1.5	1.0	191	2.26	1.08	L
				2010	400	L E	5.71	L E	1.0	1.0	191	2.28	1.09	L
				2011	400	L E	5.77	L E	1.0	0.9	191	2.31	1.10	L
3 VDTs				1983	170	L E	0.22	L F	21.4	24.5	260	0.04	0.06	L

A	Avg/Rated W	0.85	M	1984	170	M	E	0.28	L	F	20.4	19.3	260	0.05	0.07	L
D	Diversity	0.50	L	1985	170	H	B	0.36	L	F	16.0	15.3	260	0.06	0.09	M
H	Hrs/Yr	3600	M	1986	170	M	E	0.42	L	F	12.6	12.9	260	0.07	0.11	M
				1987	170	L	E	0.49	M	F	11.7	11.3	260	0.08	0.13	M
				1988	150	L	E	0.55	H	B	10.4	9.9	230	0.08	0.13	M
				1989	150	L	E	0.60	M	F	9.2	9.1	230	0.09	0.14	M
				1990	150	L	E	0.65	L	F	7.8	8.4	230	0.10	0.15	L
				1991	150	L	E	0.70	L	F	8.1	7.8	230	0.10	0.16	L
				1992	150	L	E	0.75	L	F	7.8	7.2	230	0.11	0.17	L
				1993	150	L	E	0.80	L	F	6.2	6.8	230	0.12	0.18	L
				1994	150	L	E	0.84	L	F	5.0	6.5	230	0.13	0.19	L
				1995	150	L	E	0.88	L	F	4.1	6.2	230	0.13	0.20	L
				1996	150	L	E	0.90	L	F	3.3	6.0	230	0.14	0.21	L
				1997	150	L	E	0.93	L	F	2.7	5.9	230	0.14	0.21	L
				1998	150	L	E	0.95	L	F	2.4	5.7	230	0.14	0.22	L
				1999	150	L	E	0.97	L	F	2.1	5.6	230	0.15	0.22	L
				2000	150	L	E	0.99	L	F	2.1	5.5	230	0.15	0.23	L
				2001	150	L	E	1.01	L	F	2.1	5.4	230	0.15	0.23	L
				2002	150	L	E	1.03	L	F	2.1	5.3	230	0.16	0.24	L
				2003	150	L	E	1.06	L	F	2.1	5.2	230	0.16	0.24	L
				2004	150	L	E	1.08	L	F	2.1	5.1	230	0.16	0.25	L
				2005	150	L	E	1.10	L	F	2.1	5.0	230	0.17	0.25	L
				2006	150	L	E	1.12	L	F	2.1	4.9	230	0.17	0.26	L
				2007	150	L	E	1.15	L	F	2.1	4.8	230	0.17	0.26	L
				2008	150	L	E	1.17	L	F	2.1	4.7	230	0.18	0.27	L
				2009	150	L	E	1.20	L	F	2.1	4.6	230	0.18	0.27	L
				2010	150	L	E	1.22	L	F	2.1	4.5	230	0.18	0.28	L
				2011	150	L	E	1.25	L	F	2.1	4.4	230	0.19	0.29	L
4	COPIERS			1983	1200	L	E	0.14	L	F	12.8	38.4	736	0.17	0.10	L
A	Avg/Rated W	0.20	L	1984	1200	M	E	0.16	L	F	14.6	33.5	736	0.20	0.12	L
D	Diversity	0.35	L	1985	1200	H	B	0.19	L	F	12.7	28.6	736	0.23	0.14	M
H	Hrs/Yr	8760	M	1986	1200	M	E	0.22	L	F	10.5	25.0	736	0.26	0.16	M
				1987	1200	L	E	0.24	M	F	9.5	22.4	736	0.29	0.18	M
				1988	1100	L	E	0.27	H	B	7.7	20.2	675	0.30	0.18	M
				1989	1100	L	E	0.29	M	F	6.7	19.0	675	0.32	0.19	L
				1990	1100	L	E	0.30	L	F	4.9	18.1	675	0.33	0.20	L
				1991	1100	L	E	0.32	L	F	4.3	17.3	675	0.35	0.21	L
				1992	1100	L	E	0.33	L	F	4.4	16.6	675	0.36	0.22	L
				1993	1000	L	E	0.34	L	F	4.1	16.0	613	0.34	0.21	L
				1994	1000	L	E	0.36	L	F	4.3	15.3	613	0.36	0.22	L
				1995	1000	L	E	0.37	L	F	4.4	14.6	613	0.37	0.23	L
				1996	1000	L	E	0.39	L	F	4.4	14.0	613	0.39	0.24	L
				1997	1000	L	E	0.41	L	F	4.4	13.4	613	0.41	0.25	L
				1998	1000	L	E	0.42	L	F	4.4	12.9	613	0.42	0.26	L
				1999	1000	L	E	0.44	L	F	4.3	12.3	613	0.44	0.27	L
				2000	1000	L	E	0.46	L	F	4.3	11.8	613	0.46	0.28	L
				2001	1000	L	E	0.48	L	F	4.2	11.4	613	0.48	0.30	L
				2002	1000	L	E	0.50	L	F	4.2	10.9	613	0.50	0.31	L
				2003	1000	L	E	0.52	L	E	4.0	10.5	613	0.52	0.32	L
				2004	1000	L	E	0.54	L	E	3.5	10.1	613	0.54	0.33	L
				2005	1000	L	E	0.56	L	E	3.0	9.8	613	0.56	0.34	L
				2006	1000	L	E	0.57	L	E	2.5	9.6	613	0.57	0.35	L
				2007	1000	L	E	0.58	L	E	2.0	9.4	613	0.58	0.36	L
				2008	1000	L	E	0.59	L	E	2.0	9.2	613	0.59	0.36	L
				2009	1000	L	E	0.60	L	E	2.0	9.0	613	0.60	0.37	L
				2010	1000	L	E	0.62	L	E	2.0	8.9	613	0.62	0.38	L
				2011	1000	L	E	0.63	L	E	2.0	8.7	613	0.63	0.39	L
5	PRINTERS			1983	300	L	E	0.08	L	F	47.5	68.9	79	0.02	0.01	L
A	Avg/Rated W	0.33	L	1984	300	L	E	0.15	L	F	49.8	36.2	79	0.05	0.01	L
D	Diversity	0.40	L	1985	300	M	B	0.30	L	F	39.3	18.2	79	0.09	0.02	L
H	Hrs/Yr	2000	M	1986	300	L	E	0.50	L	F	30.3	11.0	79	0.15	0.04	L
				1987	300	L	E	0.71	M	F	24.3	7.7	79	0.21	0.06	L
				1988	350	L	E	0.94	H	B	21.1	5.8	92	0.33	0.09	M
				1989	350	L	E	1.10	M	F	16.7	5.0	92	0.38	0.10	L
				1990	350	L	E	1.25	L	F	13.8	4.4	92	0.44	0.12	L
				1991	350	L	E	1.41	L	F	12.9	3.9	92	0.49	0.13	L
				1992	350	L	E	1.59	L	F	13.1	3.4	92	0.56	0.15	L
				1993	400	L	E	1.80	L	F	12.8	3.0	106	0.72	0.19	L
				1994	400	L	E	2.02	L	F	12.2	2.7	106	0.81	0.21	L
				1995	400	L	E	2.26	L	F	11.8	2.4	106	0.90	0.24	L
				1996	400	L	E	2.50	L	F	11.0	2.2	106	1.00	0.26	L
				1997	400	L	E	2.77	L	F	10.6	2.0	106	1.11	0.29	L
				1998	400	L	E	3.06	L	F	10.4	1.8	106	1.22	0.32	L
				1999	400	L	E	3.38	L	F	10.5	1.6	106	1.35	0.36	L
				2000	400	L	E	3.68	L	E	9.0	1.5	106	1.47	0.39	L
				2001	400	L	E	3.98	L	E	8.0	1.4	106	1.59	0.42	L
				2002	400	L	E	4.25	L	E	7.0	1.3	106	1.70	0.45	L
				2003	400	L	E	4.51	L	E	6.0	1.2	106	1.80	0.48	L
				2004	400	L	E	4.74	L	E	5.0	1.2	106	1.89	0.50	L
				2005	400	L	E	4.93	L	E	4.0	1.1	106	1.97	0.52	L
				2006	400	L	E	5.07	L	E	3.0	1.1	106	2.03	0.54	L
				2007	400	L	E	5.17	L	E	2.0	1.1	106	2.07	0.55	L
				2008	400	L	E	5.28	L	E	2.0	1.0	106	2.11	0.56	L
				2009	400	L	E	5.38	L	E	2.0	1.0	106	2.15	0.57	L

				2010	400	L	E	5.49	L	E	2.0	1.0	106	2.20	0.58	L
				2011	400	L	E	5.60	L	E	2.0	1.0	106	2.24	0.59	L
6 FAX				1983	250	L	E	0.01	L	F	22.0	463.0	153	0.00	0.00	L
A	Avg/Rated W	0.20	L	1984	250	L	E	0.02	L	F	21.7	361.1	153	0.00	0.00	L
D	Diversity	0.35	L	1985	250	L	E	0.02	L	F	20.4	282.8	153	0.00	0.00	L
H	Hrs/Yr	8760	M	1986	250	L	E	0.02	L	F	28.0	225.1	153	0.01	0.00	L
				1987	250	L	E	0.03	M	F	71.9	162.1	153	0.01	0.01	L
				1988	300	L	E	0.12	H	B	95.7	45.5	184	0.04	0.02	M
				1989	300	L	E	0.20	M	F	64.0	27.8	184	0.06	0.04	L
				1990	300	L	E	0.28	L	F	42.5	19.5	184	0.08	0.05	L
				1991	300	L	E	0.37	L	F	32.6	14.7	184	0.11	0.07	L
				1992	300	L	E	0.47	L	F	26.2	11.6	184	0.14	0.09	L
				1993	350	L	E	0.56	L	F	19.2	9.8	215	0.20	0.12	L
				1994	350	L	E	0.63	L	F	12.2	8.7	215	0.22	0.13	L
				1995	350	L	E	0.69	L	F	10.0	7.9	215	0.24	0.15	L
				1996	350	L	E	0.76	L	F	10.0	7.2	215	0.27	0.16	L
				1997	350	L	E	0.83	L	F	9.0	6.6	215	0.29	0.18	L
				1998	350	L	E	0.89	L	F	8.0	6.1	215	0.31	0.19	L
				1999	350	L	E	0.96	L	F	7.0	5.7	215	0.33	0.21	L
				2000	350	L	E	1.01	L	F	6.0	5.4	215	0.35	0.22	L
				2001	350	L	E	1.06	L	F	5.0	5.1	215	0.37	0.23	L
				2002	350	L	E	1.11	L	F	4.0	4.9	215	0.39	0.24	L
				2003	350	L	E	1.14	L	F	3.0	4.8	215	0.40	0.24	L
				2004	350	L	E	1.16	L	F	2.0	4.7	215	0.41	0.25	L
				2005	350	L	E	1.17	L	F	1.0	4.7	215	0.41	0.25	L
				2006	350	L	E	1.19	L	F	1.0	4.6	215	0.42	0.25	L
				2007	350	L	E	1.20	L	F	1.0	4.6	215	0.42	0.26	L
				2008	350	L	E	1.21	L	F	1.0	4.5	215	0.42	0.26	L
				2009	350	L	E	1.22	L	F	1.0	4.5	215	0.43	0.26	L
				2010	350	L	E	1.23	L	F	1.0	4.4	215	0.43	0.27	L
				2011	350	L	E	1.25	L	F	1.0	4.4	215	0.44	0.27	L
7 TYPEWRITERS				1983	130	L	E	0.89	L	F	-3.0	6.2	72	0.12	0.06	L
A	Avg/Rated W	0.85	L	1984	130	L	E	0.86	L	F	-2.8	6.3	72	0.11	0.06	L
D	Diversity	0.50	L	1985	130	M	B	0.84	L	F	4.3	6.5	72	0.11	0.06	L
H	Hrs/Yr	1300	M	1986	130	L	E	0.88	L	F	4.3	6.2	72	0.11	0.06	L
				1987	130	L	E	0.92	M	F	5.6	6.0	72	0.12	0.07	L
				1988	110	L	E	0.97	H	B	7.0	5.6	61	0.11	0.06	M
				1989	110	L	E	1.03	M	F	6.2	5.3	61	0.11	0.06	L
				1990	110	L	E	1.06	L	F	3.0	5.2	61	0.12	0.06	L
				1991	110	L	E	1.02	L	F	-3.4	5.3	61	0.11	0.06	L
				1992	110	L	E	0.99	L	F	-3.5	5.5	61	0.11	0.06	L
				1993	110	L	E	0.94	L	F	-4.8	5.8	61	0.10	0.06	L
				1994	110	L	E	0.90	L	F	-4.5	6.1	61	0.10	0.05	L
				1995	110	L	E	0.86	L	F	-4.2	6.3	61	0.09	0.05	L
				1996	110	L	E	0.83	L	F	-3.4	6.6	61	0.09	0.05	L
				1997	110	L	E	0.81	L	F	-2.9	6.8	61	0.09	0.05	L
				1998	110	L	E	0.78	L	F	-2.9	7.0	61	0.09	0.05	L
				1999	110	L	E	0.76	L	F	-2.9	7.2	61	0.08	0.05	L
				2000	110	L	E	0.74	L	F	-2.9	7.4	61	0.08	0.04	L
				2001	110	L	E	0.72	L	F	-2.9	7.6	61	0.08	0.04	L
				2002	110	L	E	0.70	L	F	-2.9	7.8	61	0.08	0.04	L
				2003	110	L	E	0.68	L	F	-2.9	8.1	61	0.07	0.04	L
				2004	110	L	E	0.66	L	F	-2.9	8.3	61	0.07	0.04	L
				2005	110	L	E	0.64	L	F	-2.9	8.6	61	0.07	0.04	L
				2006	110	L	E	0.62	L	F	-2.9	8.8	61	0.07	0.04	L
				2007	110	L	E	0.60	L	F	-2.9	9.1	61	0.07	0.04	L
				2008	110	L	E	0.58	L	F	-2.9	9.3	61	0.06	0.04	L
				2009	110	L	E	0.57	L	F	-2.9	9.6	61	0.06	0.03	L
				2010	110	L	E	0.55	L	F	-2.9	9.9	61	0.06	0.03	L
				2011	110	L	E	0.54	L	F	-2.9	10.2	61	0.06	0.03	L

		Total EPD	Total EUI	Level
TOTAL	1983	0.65	1.03	L
	1984	0.81	1.22	L
	1985	1.09	1.54	L
	1986	1.33	1.73	L
	1987	1.54	1.89	L
	1988	1.88	2.07	M
	1989	2.05	2.19	L
	1990	2.21	2.28	L
	1991	2.35	2.35	L
	1992	2.50	2.38	L
	1993	2.81	2.48	L
	1994	3.13	2.59	L
	1995	3.35	2.65	L
	1996	3.60	2.77	L
	1997	3.85	2.89	L
	1998	4.11	3.01	L
	1999	4.38	3.15	L
	2000	4.64	3.27	L

2001	4.90	3.39	L
2002	5.14	3.51	L
2003	5.36	3.62	L
2004	5.57	3.72	L
2005	5.74	3.81	L
2006	5.89	3.89	L
2007	6.01	3.97	L
2008	6.12	4.03	L
2009	6.22	4.10	L
2010	6.31	4.16	L
2011	6.40	4.22	L

FLOOR SPACE GROWTH & TOTAL SECTORAL GWH

	Area (10**6 sqft)	Total EUI	GWh
1983	61.32	1.03	63
1984	63.95	1.22	78
1985	66.28	1.54	102
1986	68.74	1.73	119
1987	71.19	1.89	135
1988	73.29	2.07	152
1989	75.48	2.19	165
1990	77.18	2.28	176
1991	79.38	2.35	187
1992	81.54	2.38	194
1993	83.81	2.48	208
1994	86.18	2.59	224
1995	88.56	2.65	235
1996	91.40	2.77	254
1997	94.51	2.89	273
1998	97.31	3.01	293
1999	99.83	3.15	314
2000	102.51	3.27	335
2001	105.19	3.39	357
2002	107.50	3.51	377
2003	110.04	3.62	398
2004	112.47	3.72	419
2005	114.89	3.81	438
2006	117.52	3.89	458
2007	120.15	3.97	477
2008	122.87	4.03	496
2009	125.42	4.10	514
2010	127.98	4.16	532
2011	130.65	4.22	551

Year	Large Office			Restaurant			Retail			Grocery			Warehouse			School			College			Hospital			Hotel			Misc		
	S as % of Small Off	NPD Power Dens (W/sqft)	EUI (kWh/sqft-yr)	S as % of Small Off	NPD Power Dens (W/sqft)	EUI (kWh/sqft-yr)	S as % of Small Off	NPD Power Dens (W/sqft)	EUI (kWh/sqft-yr)	S as % of Small Off	NPD Power Dens (W/sqft)	EUI (kWh/sqft-yr)	S as % of Small Off	NPD Power Dens (W/sqft)	EUI (kWh/sqft-yr)	S as % of Small Off	NPD Power Dens (W/sqft)	EUI (kWh/sqft-yr)	S as % of Small Off	NPD Power Dens (W/sqft)	EUI (kWh/sqft-yr)	S as % of Small Off	NPD Power Dens (W/sqft)	EUI (kWh/sqft-yr)	S as % of Small Off	NPD Power Dens (W/sqft)	EUI (kWh/sqft-yr)	S as % of Small Off	NPD Power Dens (W/sqft)	EUI (kWh/sqft-yr)
MAINS																														
1983	100	0.27	0.78	6	0.02	0.05	14	0.04	0.11	3	0.01	0.02	10	0.03	0.08	48	0.13	0.37	48	0.13	0.37	54	0.15	0.42	2	0.01	0.02	8	0.02	0.06
1984	100	0.32	0.92	6	0.02	0.05	14	0.05	0.13	3	0.01	0.03	10	0.03	0.09	48	0.15	0.44	48	0.15	0.44	54	0.17	0.49	2	0.01	0.02	8	0.03	0.07
1985	100	0.39	1.12	6	0.02	0.07	14	0.05	0.16	3	0.01	0.03	10	0.04	0.11	48	0.19	0.54	48	0.19	0.54	54	0.21	0.60	2	0.01	0.02	8	0.03	0.09
1986	100	0.42	1.20	6	0.03	0.07	14	0.06	0.17	3	0.01	0.04	10	0.04	0.12	48	0.20	0.58	48	0.20	0.58	54	0.23	0.65	2	0.01	0.02	8	0.03	0.10
1987	100	0.45	1.28	6	0.03	0.08	14	0.06	0.18	3	0.01	0.04	10	0.04	0.13	48	0.22	0.61	48	0.22	0.61	54	0.24	0.69	2	0.01	0.03	8	0.04	0.10
1988	100	0.47	1.33	6	0.03	0.08	14	0.07	0.19	3	0.01	0.04	10	0.05	0.13	48	0.22	0.64	48	0.22	0.64	54	0.25	0.72	2	0.01	0.03	8	0.04	0.11
1989	100	0.48	1.37	6	0.03	0.08	14	0.07	0.19	3	0.01	0.04	10	0.05	0.14	48	0.23	0.66	48	0.23	0.66	54	0.26	0.74	2	0.01	0.03	8	0.04	0.11
1990	100	0.49	1.39	6	0.03	0.08	14	0.07	0.19	3	0.01	0.04	10	0.05	0.14	48	0.23	0.67	48	0.23	0.67	54	0.26	0.75	2	0.01	0.03	8	0.04	0.11
1991	100	0.49	1.38	6	0.03	0.08	14	0.07	0.19	3	0.01	0.04	10	0.05	0.14	48	0.23	0.66	48	0.23	0.66	54	0.26	0.75	2	0.01	0.03	8	0.04	0.11
1992	100	0.47	1.34	6	0.03	0.08	14	0.07	0.19	3	0.01	0.04	10	0.05	0.13	48	0.23	0.64	48	0.23	0.64	54	0.25	0.72	2	0.01	0.03	8	0.04	0.11
1993	100	0.46	1.30	6	0.03	0.08	14	0.06	0.18	3	0.01	0.04	10	0.05	0.13	48	0.22	0.63	48	0.22	0.63	54	0.25	0.70	2	0.01	0.03	8	0.04	0.10
1994	100	0.44	1.26	6	0.03	0.08	14	0.06	0.18	3	0.01	0.04	10	0.04	0.13	48	0.21	0.61	48	0.21	0.61	54	0.24	0.68	2	0.01	0.03	8	0.04	0.10
1995	100	0.43	1.22	6	0.03	0.07	14	0.06	0.17	3	0.01	0.04	10	0.04	0.12	48	0.21	0.59	48	0.21	0.59	54	0.23	0.66	2	0.01	0.02	8	0.03	0.10
1996	100	0.43	1.24	6	0.03	0.07	14	0.06	0.17	3	0.01	0.04	10	0.04	0.12	48	0.21	0.59	48	0.21	0.59	54	0.23	0.67	2	0.01	0.02	8	0.03	0.10
1997	100	0.44	1.25	6	0.03	0.08	14	0.06	0.18	3	0.01	0.04	10	0.04	0.13	48	0.21	0.60	48	0.21	0.60	54	0.24	0.68	2	0.01	0.03	8	0.04	0.10
1998	100	0.45	1.27	6	0.03	0.08	14	0.06	0.18	3	0.01	0.04	10	0.04	0.13	48	0.21	0.61	48	0.21	0.61	54	0.24	0.69	2	0.01	0.03	8	0.04	0.10
1999	100	0.45	1.29	6	0.03	0.08	14	0.06	0.18	3	0.01	0.04	10	0.05	0.13	48	0.22	0.62	48	0.22	0.62	54	0.25	0.70	2	0.01	0.03	8	0.04	0.10
2000	100	0.46	1.32	6	0.03	0.08	14	0.06	0.18	3	0.01	0.04	10	0.05	0.13	48	0.22	0.63	48	0.22	0.63	54	0.25	0.71	2	0.01	0.03	8	0.04	0.11
2001	100	0.47	1.34	6	0.03	0.08	14	0.07	0.19	3	0.01	0.04	10	0.05	0.13	48	0.23	0.64	48	0.23	0.64	54	0.25	0.72	2	0.01	0.03	8	0.04	0.11
2002	100	0.48	1.36	6	0.03	0.08	14	0.07	0.19	3	0.01	0.04	10	0.05	0.14	48	0.23	0.65	48	0.23	0.65	54	0.26	0.73	2	0.01	0.03	8	0.04	0.11
2003	100	0.48	1.38	6	0.03	0.08	14	0.07	0.19	3	0.01	0.04	10	0.05	0.14	48	0.23	0.66	48	0.23	0.66	54	0.26	0.74	2	0.01	0.03	8	0.04	0.11
2004	100	0.49	1.40	6	0.03	0.08	14	0.07	0.20	3	0.01	0.04	10	0.05	0.14	48	0.24	0.67	48	0.24	0.67	54	0.27	0.75	2	0.01	0.03	8	0.04	0.11
2005	100	0.50	1.42	6	0.03	0.09	14	0.07	0.20	3	0.01	0.04	10	0.05	0.14	48	0.24	0.68	48	0.24	0.68	54	0.27	0.77	2	0.01	0.03	8	0.04	0.11
2006	100	0.51	1.44	6	0.03	0.09	14	0.07	0.20	3	0.02	0.04	10	0.05	0.14	48	0.24	0.69	48	0.24	0.69	54	0.27	0.78	2	0.01	0.03	8	0.04	0.12
2007	100	0.51	1.46	6	0.03	0.09	14	0.07	0.20	3	0.02	0.04	10	0.05	0.15	48	0.25	0.70	48	0.25	0.70	54	0.28	0.79	2	0.01	0.03	8	0.04	0.12
2008	100	0.52	1.48	6	0.03	0.09	14	0.07	0.21	3	0.02	0.04	10	0.05	0.15	48	0.25	0.71	48	0.25	0.71	54	0.28	0.80	2	0.01	0.03	8	0.04	0.12
2009	100	0.53	1.51	6	0.03	0.09	14	0.07	0.21	3	0.02	0.05	10	0.05	0.15	48	0.25	0.72	48	0.25	0.72	54	0.29	0.81	2	0.01	0.03	8	0.04	0.12
2010	100	0.54	1.53	6	0.03	0.09	14	0.08	0.21	3	0.02	0.05	10	0.05	0.15	48	0.26	0.73	48	0.26	0.73	54	0.29	0.83	2	0.01	0.03	8	0.04	0.12
2011	100	0.54	1.55	6	0.03	0.09	14	0.08	0.22	3	0.02	0.05	10	0.05	0.16	48	0.26	0.74	48	0.26	0.74	54	0.29	0.84	2	0.01	0.03	8	0.04	0.12
PCs																														
1983	100	0.02	0.01	1	0.00	0.00	14	0.00	0.00	1	0.00	0.00	22	0.01	0.00	42	0.01	0.01	42	0.01	0.01	35	0.01	0.00	4	0.00	0.00	10	0.00	0.00
1984	100	0.08	0.04	1	0.00	0.00	14	0.01	0.01	1	0.00	0.00	22	0.02	0.01	42	0.03	0.02	42	0.03	0.02	35	0.03	0.01	4	0.00	0.00	10	0.01	0.00
1985	100	0.21	0.10	1	0.00	0.00	14	0.03	0.01	1	0.00	0.00	22	0.05	0.02	42	0.09	0.04	42	0.09	0.04	35	0.07	0.03	4	0.01	0.00	10	0.02	0.01
1986	100	0.30	0.14	1	0.00	0.00	14	0.04	0.02	1	0.00	0.00	22	0.07	0.03	42	0.13	0.06	42	0.13	0.06	35	0.11	0.05	4	0.01	0.01	10	0.03	0.01
1987	100	0.38	0.18	1	0.00	0.00	14	0.05	0.03	1	0.00	0.00	22	0.08	0.04	42	0.16	0.08	42	0.16	0.08	35	0.13	0.06	4	0.02	0.01	10	0.04	0.02
1988	100	0.56	0.27	1	0.01	0.00	14	0.08	0.04	1	0.01	0.00	22	0.12	0.06	42	0.23	0.11	42	0.23	0.11	35	0.20	0.09	4	0.02	0.01	10	0.06	0.03
1989	100	0.61	0.29	1	0.01	0.00	14	0.08	0.04	1	0.01	0.00	22	0.13	0.06	42	0.25	0.12	42	0.25	0.12	35	0.21	0.10	4	0.02	0.01	10	0.06	0.03
1990	100	0.65	0.31	1	0.01	0.00	14	0.09	0.04	1	0.01	0.00	22	0.14	0.07	42	0.27	0.13	42	0.27	0.13	35	0.23	0.11	4	0.03	0.01	10	0.07	0.03
1991	100	0.70	0.33	1	0.01	0.00	14	0.10	0.05	1	0.01	0.00	22	0.15	0.07	42	0.29	0.14	42	0.29	0.14	35	0.24	0.12	4	0.03	0.01	10	0.07	0.03
1992	100	0.75	0.36	1	0.01	0.00	14	0.10	0.05	1	0.01	0.00	22	0.16	0.08	42	0.31	0.15	42	0.31	0.15	35	0.26	0.13	4	0.03	0.01	10	0.07	0.04
1993	100	0.87	0.42	1	0.01	0.00	14	0.12	0.06	1	0.01	0.00	22	0.19	0.09	42	0.37	0.17	42	0.37	0.17	35	0.30	0.15	4	0.03	0.02	10	0.09	0.04
1994	100	1.08	0.52	1	0.01	0.01	14	0.15	0.07	1	0.01	0.01	22	0.24	0.11	42	0.45	0.22	42	0.45	0.22	35	0.38	0.18	4	0.04	0.02	10	0.11	0.05
1995	100	1.18	0.56	1	0.01	0.01	14	0.16	0.08	1	0.01	0.01	22	0.26	0.12	42	0.49	0.24	42	0.49	0.24	35	0.41	0.20	4	0.05	0.02	10	0.12	0.06
1996	100	1.28	0.61	1	0.01	0.01	14	0.18	0.09	1	0.01	0.01	22	0.28	0.13	42	0.54	0.26	42	0.54	0.26	35	0.45	0.21	4	0.05	0.02	10	0.13	0.06
1997	100	1.38	0.66	1	0.01	0.01	14	0.19	0.09	1	0.01	0.01	22	0.30	0.14	42	0.58	0.28	42	0.58	0.28	35	0.48	0.23	4	0.06	0.03	10	0.14	0.07
1998	100	1.47	0.70	1	0.01	0.01	14	0.21	0.10	1	0.01	0.01	22	0.32	0.15	42	0.62	0.30	42	0.62	0.30	35	0.51	0.25	4	0.06	0.03	10	0.15	0.07
1999	100	1.57	0.75	1	0.02	0.01	14	0.22	0.10	1	0.02	0.01	22	0.34	0.16	42	0.66	0.31	42	0.66	0.31	35	0.55	0.26	4	0.06	0.03	10	0.16	0.07
2000	100	1.66	0.79	1	0.02	0.01	14	0.23	0.11	1	0.02	0.01	22	0.37	0.17	42	0.70	0.33	42	0.70	0.33	35	0.58	0.28	4	0.07	0.03	10	0.17	0.08
2001	100	1.75	0.84	1	0.02	0.01	14	0.25	0.12	1	0.02	0.01	22	0.39	0.18	42	0.74	0.35	42	0.74	0.35	35	0.61	0.29	4	0.07	0.03	10	0.18	0.08
2002	100	1.84	0.88	1	0.02	0.01	14	0.26	0.12	1	0.02	0.01	22	0.40	0.19	42	0.77	0.37	42	0.77	0.37	35	0.64	0.31	4	0.07	0.04	10	0.18	0.09
2003	100	1.92	0.92	1	0.02	0.01	14	0.27	0.13	1	0.02	0.01	22	0.42	0.20	42	0.81	0.39	42	0.81	0.39	35	0.67	0.32	4	0.08	0.04	10	0.19	0.09
2004	100	2.00	0.96	1	0.02	0.01	14	0.28	0.13	1	0.02	0.01	22	0.44	0.21	42	0.84	0.40	42	0.84	0.40	35	0.70	0.33	4	0.08	0.04	10	0.20	0.10
2005	100	2.07	0.99	1	0.02	0.01	14	0.29	0.14	1	0.02	0.01	22	0.46	0.22	42	0.87	0.42	42	0.87	0.42	35	0.72	0.35	4	0.08	0.04	10	0.21	0.10
2006	100	2.13	1.02	1	0.02	0.01	14	0.30	0.14	1	0.02	0.01	22	0.47	0.22	42	0.90	0.43	42	0.90	0.43	35	0.75	0.36	4	0.09	0.04	10	0.21	0.10
2007	100	2.19	1.05	1	0.02	0.01	14	0.31	0.15	1	0.02	0.01	22	0.48	0.23	42	0.92	0.44	42	0.92	0.44	35	0.76	0.37	4	0.09	0.04	10	0.22	0.10
2008	100	2.23	1.07	1	0.02	0.01	14	0.31	0.15	1	0.02	0.01	22	0.49	0.23	42	0.94	0.45	42	0.94	0.45	35	0.78	0.37	4	0.09	0.04	10	0.22	0.11
2009	100	2.26	1.08	1	0.02	0.01	14	0.32	0.15	1	0.02	0.01	22	0.50	0.24	42	0.95	0.45	42	0.95	0.45	35	0.79	0.38	4	0.09	0.04	10	0.23	0.11
2010	100	2.28	1.09	1	0.02	0.01	14	0.32	0.15	1	0.02	0.01	22	0.50	0.24	42	0.96	0.46	42	0.96	0.46	35	0.80	0.38	4	0.09	0.04	10	0.23	0.11
2011	100	2.31	1.10	1	0.02	0.01	14	0.32	0.15	1	0.02	0.01	22	0.51	0.24	42	0.97	0.46	42	0.97	0.46	35	0.81	0.39	4	0.09	0.04	10	0.23	0.11
VDTS																														
1983	100	0.04	0.06	0	0.00	0.00	11	0.00	0.01	0	0.00	0.00	9	0.00	0.01	27	0.01	0.02	27	0.01	0.02	5	0.00	0.00	11	0.00	0.01	0	0.00	0.00
1984	100	0.05	0.07	0	0.00	0.00	11	0.01	0.01	0	0.00	0.00	9	0.00	0.01	27	0.01	0.02	27	0.01	0.02	5	0.00	0.00	11	0.01	0.01	0	0.00	0.00
1985	100	0.06	0.09	0	0.00	0.00	11	0.01	0.01	0	0.00	0.00	9	0.01	0.01	27	0.02	0.03	27	0.02	0.03	5	0.00	0.00	11	0.01	0.01	0	0.00	0.00

| | | |

1999	100	1.35	0.36	1	0.01	0.00	11	0.15	0.04	6	0.08	0.02	22	0.30	0.08	24	0.32	0.09	24	0.32	0.09	59	0.80	0.21	9	0.12	0.03	16	0.22	0.06
2000	100	1.47	0.39	1	0.01	0.00	11	0.16	0.04	6	0.09	0.02	22	0.32	0.09	24	0.35	0.09	24	0.35	0.09	59	0.87	0.23	9	0.13	0.03	16	0.24	0.06
2001	100	1.59	0.42	1	0.02	0.00	11	0.17	0.05	6	0.10	0.03	22	0.35	0.09	24	0.38	0.10	24	0.38	0.10	59	0.94	0.25	9	0.14	0.04	16	0.25	0.07
2002	100	1.70	0.45	1	0.02	0.00	11	0.19	0.05	6	0.10	0.03	22	0.37	0.10	24	0.41	0.11	24	0.41	0.11	59	1.00	0.27	9	0.15	0.04	16	0.27	0.07
2003	100	1.80	0.48	1	0.02	0.00	11	0.20	0.05	6	0.11	0.03	22	0.40	0.10	24	0.43	0.11	24	0.43	0.11	59	1.06	0.28	9	0.16	0.04	16	0.29	0.08
2004	100	1.89	0.50	1	0.02	0.01	11	0.21	0.06	6	0.11	0.03	22	0.42	0.11	24	0.45	0.12	24	0.45	0.12	59	1.12	0.30	9	0.17	0.05	16	0.30	0.08
2005	100	1.97	0.52	1	0.02	0.01	11	0.22	0.06	6	0.12	0.03	22	0.43	0.11	24	0.47	0.12	24	0.47	0.12	59	1.16	0.31	9	0.18	0.05	16	0.32	0.08
2006	100	2.03	0.54	1	0.02	0.01	11	0.22	0.06	6	0.12	0.03	22	0.45	0.12	24	0.49	0.13	24	0.49	0.13	59	1.20	0.32	9	0.18	0.05	16	0.32	0.09
2007	100	2.07	0.55	1	0.02	0.01	11	0.23	0.06	6	0.12	0.03	22	0.46	0.12	24	0.50	0.13	24	0.50	0.13	59	1.22	0.32	9	0.19	0.05	16	0.33	0.09
2008	100	2.11	0.56	1	0.02	0.01	11	0.23	0.06	6	0.13	0.03	22	0.46	0.12	24	0.51	0.13	24	0.51	0.13	59	1.25	0.33	9	0.19	0.05	16	0.34	0.09
2009	100	2.15	0.57	1	0.02	0.01	11	0.24	0.06	6	0.13	0.03	22	0.47	0.13	24	0.52	0.14	24	0.52	0.14	59	1.27	0.34	9	0.19	0.05	16	0.34	0.09
2010	100	2.20	0.58	1	0.02	0.01	11	0.24	0.06	6	0.13	0.03	22	0.48	0.13	24	0.53	0.14	24	0.53	0.14	59	1.30	0.34	9	0.20	0.05	16	0.35	0.09
2011	100	2.24	0.59	1	0.02	0.01	11	0.25	0.07	6	0.13	0.04	22	0.49	0.13	24	0.54	0.14	24	0.54	0.14	59	1.32	0.35	9	0.20	0.05	16	0.36	0.09
FAX																														
1983	100	0.00	0.00	0	0.00	0.00	0	0.00	0.00	0	0.00	0.00	25	0.00	0.00	0	0.00	0.00	0	0.00	0.00	150	0.00	0.00	8	0.00	0.00	0	0.00	0.00
1984	100	0.00	0.00	0	0.00	0.00	0	0.00	0.00	0	0.00	0.00	25	0.00	0.00	0	0.00	0.00	0	0.00	0.00	150	0.01	0.00	8	0.00	0.00	0	0.00	0.00
1985	100	0.00	0.00	0	0.00	0.00	0	0.00	0.00	0	0.00	0.00	25	0.00	0.00	0	0.00	0.00	0	0.00	0.00	150	0.01	0.00	8	0.00	0.00	0	0.00	0.00
1986	100	0.01	0.00	0	0.00	0.00	0	0.00	0.00	0	0.00	0.00	25	0.00	0.00	0	0.00	0.00	0	0.00	0.00	150	0.01	0.01	8	0.00	0.00	0	0.00	0.00
1987	100	0.01	0.01	0	0.00	0.00	0	0.00	0.00	0	0.00	0.00	25	0.00	0.00	0	0.00	0.00	0	0.00	0.00	150	0.01	0.01	8	0.00	0.00	0	0.00	0.00
1988	100	0.04	0.02	0	0.00	0.00	0	0.00	0.00	0	0.00	0.00	25	0.01	0.01	0	0.00	0.00	0	0.00	0.00	150	0.05	0.03	8	0.00	0.00	0	0.00	0.00
1989	100	0.06	0.04	0	0.00	0.00	0	0.00	0.00	0	0.00	0.00	25	0.01	0.01	0	0.00	0.00	0	0.00	0.00	150	0.09	0.05	8	0.00	0.00	0	0.00	0.00
1990	100	0.08	0.05	0	0.00	0.00	0	0.00	0.00	0	0.00	0.00	25	0.02	0.01	0	0.00	0.00	0	0.00	0.00	150	0.13	0.08	8	0.01	0.00	0	0.00	0.00
1991	100	0.11	0.07	0	0.00	0.00	0	0.00	0.00	0	0.00	0.00	25	0.03	0.02	0	0.00	0.00	0	0.00	0.00	150	0.17	0.10	8	0.01	0.01	0	0.00	0.00
1992	100	0.14	0.09	0	0.00	0.00	0	0.00	0.00	0	0.00	0.00	25	0.04	0.02	0	0.00	0.00	0	0.00	0.00	150	0.21	0.13	8	0.01	0.01	0	0.00	0.00
1993	100	0.20	0.12	0	0.00	0.00	0	0.00	0.00	0	0.00	0.00	25	0.05	0.03	0	0.00	0.00	0	0.00	0.00	150	0.29	0.18	8	0.02	0.01	0	0.00	0.00
1994	100	0.22	0.13	0	0.00	0.00	0	0.00	0.00	0	0.00	0.00	25	0.05	0.03	0	0.00	0.00	0	0.00	0.00	150	0.33	0.20	8	0.02	0.01	0	0.00	0.00
1995	100	0.24	0.15	0	0.00	0.00	0	0.00	0.00	0	0.00	0.00	25	0.06	0.04	0	0.00	0.00	0	0.00	0.00	150	0.36	0.22	8	0.02	0.01	0	0.00	0.00
1996	100	0.27	0.16	0	0.00	0.00	0	0.00	0.00	0	0.00	0.00	25	0.07	0.04	0	0.00	0.00	0	0.00	0.00	150	0.40	0.24	8	0.02	0.01	0	0.00	0.00
1997	100	0.29	0.18	0	0.00	0.00	0	0.00	0.00	0	0.00	0.00	25	0.07	0.04	0	0.00	0.00	0	0.00	0.00	150	0.43	0.27	8	0.02	0.01	0	0.00	0.00
1998	100	0.31	0.19	0	0.00	0.00	0	0.00	0.00	0	0.00	0.00	25	0.08	0.05	0	0.00	0.00	0	0.00	0.00	150	0.47	0.29	8	0.03	0.02	0	0.00	0.00
1999	100	0.33	0.21	0	0.00	0.00	0	0.00	0.00	0	0.00	0.00	25	0.08	0.05	0	0.00	0.00	0	0.00	0.00	150	0.50	0.31	8	0.03	0.02	0	0.00	0.00
2000	100	0.35	0.22	0	0.00	0.00	0	0.00	0.00	0	0.00	0.00	25	0.09	0.05	0	0.00	0.00	0	0.00	0.00	150	0.53	0.33	8	0.03	0.02	0	0.00	0.00
2001	100	0.37	0.23	0	0.00	0.00	0	0.00	0.00	0	0.00	0.00	25	0.09	0.06	0	0.00	0.00	0	0.00	0.00	150	0.56	0.34	8	0.03	0.02	0	0.00	0.00
2002	100	0.39	0.24	0	0.00	0.00	0	0.00	0.00	0	0.00	0.00	25	0.10	0.06	0	0.00	0.00	0	0.00	0.00	150	0.58	0.36	8	0.03	0.02	0	0.00	0.00
2003	100	0.40	0.24	0	0.00	0.00	0	0.00	0.00	0	0.00	0.00	25	0.10	0.06	0	0.00	0.00	0	0.00	0.00	150	0.60	0.37	8	0.03	0.02	0	0.00	0.00
2004	100	0.41	0.25	0	0.00	0.00	0	0.00	0.00	0	0.00	0.00	25	0.10	0.06	0	0.00	0.00	0	0.00	0.00	150	0.61	0.37	8	0.03	0.02	0	0.00	0.00
2005	100	0.41	0.25	0	0.00	0.00	0	0.00	0.00	0	0.00	0.00	25	0.10	0.06	0	0.00	0.00	0	0.00	0.00	150	0.62	0.38	8	0.03	0.02	0	0.00	0.00
2006	100	0.42	0.25	0	0.00	0.00	0	0.00	0.00	0	0.00	0.00	25	0.10	0.06	0	0.00	0.00	0	0.00	0.00	150	0.62	0.38	8	0.03	0.02	0	0.00	0.00
2007	100	0.42	0.26	0	0.00	0.00	0	0.00	0.00	0	0.00	0.00	25	0.10	0.06	0	0.00	0.00	0	0.00	0.00	150	0.63	0.39	8	0.03	0.02	0	0.00	0.00
2008	100	0.42	0.26	0	0.00	0.00	0	0.00	0.00	0	0.00	0.00	25	0.11	0.06	0	0.00	0.00	0	0.00	0.00	150	0.64	0.39	8	0.03	0.02	0	0.00	0.00
2009	100	0.43	0.26	0	0.00	0.00	0	0.00	0.00	0	0.00	0.00	25	0.11	0.07	0	0.00	0.00	0	0.00	0.00	150	0.64	0.39	8	0.03	0.02	0	0.00	0.00
2010	100	0.43	0.27	0	0.00	0.00	0	0.00	0.00	0	0.00	0.00	25	0.11	0.07	0	0.00	0.00	0	0.00	0.00	150	0.65	0.40	8	0.03	0.02	0	0.00	0.00
2011	100	0.44	0.27	0	0.00	0.00	0	0.00	0.00	0	0.00	0.00	25	0.11	0.07	0	0.00	0.00	0	0.00	0.00	150	0.65	0.40	8	0.03	0.02	0	0.00	0.00
TYPEWRITERS																														
1983	100	0.12	0.06	0	0.00	0.00	5	0.01	0.00	1	0.00	0.00	15	0.02	0.01	37	0.04	0.02	37	0.04	0.02	38	0.04	0.02	2	0.00	0.00	9	0.01	0.01
1984	100	0.11	0.06	0	0.00	0.00	5	0.01	0.00	1	0.00	0.00	15	0.02	0.01	37	0.04	0.02	37	0.04	0.02	38	0.04	0.02	2	0.00	0.00	9	0.01	0.01
1985	100	0.11	0.06	0	0.00	0.00	5	0.01	0.00	1	0.00	0.00	15	0.02	0.01	37	0.04	0.02	37	0.04	0.02	38	0.04	0.02	2	0.00	0.00	9	0.01	0.01
1986	100	0.11	0.06	0	0.00	0.00	5	0.01	0.00	1	0.00	0.00	15	0.02	0.01	37	0.04	0.02	37	0.04	0.02	38	0.04	0.02	2	0.00	0.00	9	0.01	0.01
1987	100	0.12	0.07	0	0.00	0.00	5	0.01	0.00	1	0.00	0.00	15	0.02	0.01	37	0.04	0.02	37	0.04	0.02	38	0.05	0.02	2	0.00	0.00	9	0.01	0.01
1988	100	0.11	0.06	0	0.00	0.00	5	0.01	0.00	1	0.00	0.00	15	0.02	0.01	37	0.04	0.02	37	0.04	0.02	38	0.04	0.02	2	0.00	0.00	9	0.01	0.01
1989	100	0.11	0.06	0	0.00	0.00	5	0.01	0.00	1	0.00	0.00	15	0.02	0.01	37	0.04	0.02	37	0.04	0.02	38	0.04	0.02	2	0.00	0.00	9	0.01	0.01
1990	100	0.12	0.06	0	0.00	0.00	5	0.01	0.00	1	0.00	0.00	15	0.02	0.01	37	0.04	0.02	37	0.04	0.02	38	0.04	0.02	2	0.00	0.00	9	0.01	0.01
1991	100	0.11	0.06	0	0.00	0.00	5	0.01	0.00	1	0.00	0.00	15	0.02	0.01	37	0.04	0.02	37	0.04	0.02	38	0.04	0.02	2	0.00	0.00	9	0.01	0.01
1992	100	0.11	0.06	0	0.00	0.00	5	0.01	0.00	1	0.00	0.00	15	0.02	0.01	37	0.04	0.02	37	0.04	0.02	38	0.04	0.02	2	0.00	0.00	9	0.01	0.01
1993	100	0.10	0.06	0	0.00	0.00	5	0.01	0.00	1	0.00	0.00	15	0.02	0.01	37	0.04	0.02	37	0.04	0.02	38	0.04	0.02	2	0.00	0.00	9	0.01	0.01
1994	100	0.10	0.05	0	0.00	0.00	5	0.00	0.00	1	0.00	0.00	15	0.01	0.01	37	0.04	0.02	37	0.04	0.02	38	0.04	0.02	2	0.00	0.00	9	0.01	0.00
1995	100	0.09	0.05	0	0.00	0.00	5	0.00	0.00	1	0.00	0.00	15	0.01	0.01	37	0.04	0.02	37	0.04	0.02	38	0.04	0.02	2	0.00	0.00	9	0.01	0.00
1996	100	0.09	0.05	0	0.00	0.00	5	0.00	0.00	1	0.00	0.00	15	0.01	0.01	37	0.03	0.02	37	0.03	0.02	38	0.03	0.02	2	0.00	0.00	9	0.01	0.00
1997	100	0.09	0.05	0	0.00	0.00	5	0.00	0.00	1	0.00	0.00	15	0.01	0.01	37	0.03	0.02	37	0.03	0.02	38	0.03	0.02	2	0.00	0.00	9	0.01	0.00
1998	100	0.09	0.05	0	0.00	0.00	5	0.00	0.00	1	0.00	0.00	15	0.01	0.01	37	0.03	0.02	37	0.03	0.02	38	0.03	0.02	2	0.00	0.00	9	0.01	0.00
1999	100	0.08	0.05	0	0.00	0.00	5	0.00	0.00	1	0.00	0.00	15	0.01	0.01	37	0.03	0.02	37	0.03	0.02	38	0.03	0.02	2	0.00	0.00	9	0.01	0.00
2000	100	0.08	0.04	0	0.00	0.00	5	0.00	0.00	1	0.00	0.00	15	0.01	0.01	37	0.03	0.02	37	0.03	0.02	38	0.03	0.02	2	0.00	0.00	9	0.01	0.00
2001	100	0.08	0.04	0	0.00	0.00	5	0.00	0.00	1	0.00	0.00	15	0.01	0.01	37	0.03	0.02	37	0.03	0.02	38	0.03	0.02	2	0.00	0.00	9	0.01	0.00
2002	100	0.08	0.04	0	0.00	0.00	5	0.00	0.00	1	0.00	0.00	15	0.01	0.01	37	0.03	0.02	37	0.03	0.02	38	0.03	0.02	2	0.00	0.00	9	0.01	0.00
2003	100	0.07	0.04	0	0.00	0.00	5	0.00	0.00	1	0.00	0.00	15	0.01	0.01	37	0.03	0.02	37	0.03	0.02	38	0.03	0.02	2	0.00	0.00	9	0.01	0.00
2004	100	0.07	0.04	0	0.00	0.00	5	0.00	0.00	1	0.00	0.00	15	0.01	0.01	37	0.03	0.01	37	0.03	0.01	38	0.03	0.02	2	0.00	0.00	9	0.01	0.00
2005	100	0.07	0.04	0	0.00	0.00	5	0.00	0.00	1	0.00	0.00	15	0.01	0.01	37	0.03	0.01	37	0.03	0.01	38	0.03	0.01	2	0.00	0.00	9	0.01	0.00
2006	100	0.07	0.04	0	0.00	0.00	5	0.00	0.00	1	0.00	0.00	15	0.01	0.01	37	0.03	0.01	37	0.03	0.01	38	0.03	0.01	2	0.00	0.00	9	0.01	0.00
2007	100	0.07	0.04	0	0.00	0.00	5	0.00	0.00	1	0.00	0.00	15	0.01	0.01	37	0.02	0.01	37	0.02	0.01	38	0.03	0.01	2	0.00	0.00	9	0.01	0.00
2008	100	0.06	0.04	0	0.00	0.00	5	0.00	0.00	1	0.00	0.00	15	0.01	0.01	37	0.02	0.01	37	0.02	0.01	38	0.02	0.01	2	0.00	0.00	9	0.01	0.00
2009	100	0.06	0.03	0	0.00	0.00	5	0.00	0.00	1	0.00	0.00	15	0.01	0.01	37	0.02	0.01	37	0.02	0.01	38	0.02	0.01	2	0.00	0.00	9	0.01	0.00
2010	100	0.06	0.03	0	0.00	0.00	5	0.00	0.00	1	0.00	0.00	15	0.01	0.01	37	0.02	0.01	37	0.02	0.01	38	0.02	0.01	2	0.00	0.00	9	0.01	0.00
2011	100	0.06	0.03	0	0.00	0.00	5	0.00	0.00	1	0.00	0.00	15	0.01	0.00	37	0.02	0.01	37	0.02	0.01	38	0.02	0.01	2	0.00	0.00	9	0.01	0.00

Total	Large Office EUI	Large Office % of smoff	Large Office NPD	Large Office EUI	Restaurant % of smoff	Restaurant NPD	Restaurant EUI	Retail % of smoff	Retail NPD	Retail EUI	Grocery % of smoff	Grocery NPD	Grocery EUI	Warehouse % of smoff	Warehouse NPD	Warehouse EUI	School % of smoff	School NPD	School EUI	College % of smoff	College NPD	College EUI	Hospital % of smoff	Hospital NPD	Hospital EUI	Hotel % of smoff	Hotel NPD	Hotel EUI	Misc % of smoff	Misc NPD	Misc EUI
1983	100	0.65	1.03	5	0.02	0.05	14	0.09	0.14	4	0.03	0.04	12	0.10	0.12	43	0.24	0.44	43	0.24	0.44	53	0.37	0.55	3	0.02	0.03	10	0.08	0.10
1984	100	0.81	1.22	5	0.02	0.06	14	0.12	0.17	3	0.04	0.04	12	0.12	0.15	43	0.30	0.53	43	0.30	0.53	53	0.45	0.65	3	0.03	0.04	9	0.10	0.12
1985	100	1.09	1.54	4	0.03	0.07	14	0.16	0.22	3	0.05	0.05	12	0.18	0.19	43	0.40	0.66	43	0.40	0.66	52	0.58	0.80	3	0.04	0.05	9	0.14	0.14
1986	100	1.33	1.73	4	0.03	0.07	14	0.19	0.24	3	0.05	0.06	13	0.22	0.22	43	0.48	0.74	43	0.48	0.74	52	0.70	0.90	3	0.06	0.05	10	0.17	0.16
1987	100	1.54	1.89	4	0.03	0.08	14	0.22	0.27	3	0.06	0.06	13	0.27	0.24	42	0.56	0.80	42	0.56	0.80	52	0.81	0.98	3	0.07	0.06	10	0.19	0.18
1988	100	1.88	2.07	4	0.04	0.08	14	0.26	0.29	3	0.07	0.07	13	0.34	0.28	42	0.67	0.87	42	0.67	0.87	52	0.99	1.08	3	0.09	0.07	10	0.23	0.20
1989	100	2.05	2.19	4	0.04	0.09	14	0.28	0.30	3	0.08	0.07	14	0.38	0.30	41	0.71	0.91	41	0.71	0.91	53	1.10	1.15	3	0.10	0.08	10	0.25	0.21
1990	100	2.21	2.28	4	0.04	0.09	14	0.30	0.32	3	0.09	0.07	14	0.41	0.31	41	0.76	0.93	41	0.76	0.93	53	1.21	1.21	4	0.11	0.08	10	0.27	0.22
1991	100	2.35	2.35	4	0.04	0.09	14	0.31	0.32	3	0.09	0.08	14	0.44	0.33	40	0.79	0.95	40	0.79	0.95	53	1.31	1.26	4	0.12	0.09	10	0.29	0.23
1992	100	2.50	2.38	4	0.04	0.09	14	0.33	0.32	3	0.10	0.08	14	0.48	0.34	40	0.82	0.95	40	0.82	0.95	54	1.41	1.28	4	0.13	0.09	10	0.31	0.23
1993	100	2.81	2.48	3	0.04	0.08	13	0.36	0.33	3	0.10	0.08	15	0.55	0.36	39	0.90	0.96	39	0.90	0.96	54	1.61	1.35	4	0.15	0.10	10	0.34	0.24
1994	100	3.13	2.59	3	0.05	0.08	13	0.40	0.34	3	0.11	0.08	15	0.62	0.39	38	1.01	1.00	38	1.01	1.00	54	1.77	1.41	4	0.17	0.11	10	0.37	0.25
1995	100	3.35	2.65	3	0.05	0.08	13	0.43	0.35	3	0.12	0.08	16	0.67	0.41	38	1.07	1.00	38	1.07	1.00	54	1.90	1.44	4	0.19	0.11	10	0.40	0.26
1996	100	3.60	2.77	3	0.05	0.08	13	0.46	0.37	3	0.13	0.09	16	0.72	0.44	38	1.14	1.04	38	1.14	1.04	55	2.04	1.52	4	0.20	0.12	10	0.43	0.27
1997	100	3.85	2.89	3	0.05	0.08	13	0.49	0.38	3	0.14	0.09	16	0.78	0.46	37	1.21	1.08	37	1.21	1.08	55	2.19	1.59	4	0.22	0.13	10	0.46	0.28
1998	100	4.11	3.01	3	0.05	0.09	13	0.52	0.40	3	0.15	0.09	16	0.83	0.48	37	1.29	1.12	37	1.29	1.12	55	2.35	1.66	4	0.24	0.13	10	0.50	0.30
1999	100	4.38	3.15	3	0.06	0.09	13	0.55	0.41	3	0.16	0.10	16	0.89	0.51	37	1.37	1.16	37	1.37	1.16	55	2.51	1.74	4	0.26	0.14	10	0.53	0.31
2000	100	4.64	3.27	3	0.06	0.09	13	0.58	0.43	3	0.17	0.10	16	0.95	0.54	37	1.44	1.20	37	1.44	1.20	55	2.66	1.81	5	0.27	0.15	10	0.57	0.32
2001	100	4.90	3.39	3	0.06	0.09	13	0.61	0.44	3	0.18	0.11	16	1.01	0.56	36	1.52	1.24	36	1.52	1.24	56	2.81	1.88	5	0.29	0.15	10	0.60	0.34
2002	100	5.14	3.51	3	0.06	0.09	13	0.64	0.46	3	0.19	0.11	17	1.06	0.58	36	1.59	1.28	36	1.59	1.28	56	2.95	1.95	5	0.31	0.16	10	0.63	0.35
2003	100	5.36	3.62	3	0.07	0.10	13	0.67	0.47	3	0.20	0.11	17	1.11	0.60	36	1.66	1.31	36	1.66	1.31	56	3.08	2.01	5	0.32	0.17	10	0.66	0.37
2004	100	5.57	3.72	3	0.07	0.10	13	0.70	0.49	3	0.21	0.12	17	1.15	0.62	36	1.72	1.35	36	1.72	1.35	56	3.19	2.07	5	0.33	0.17	10	0.69	0.38
2005	100	5.74	3.81	3	0.07	0.10	13	0.72	0.50	3	0.22	0.12	17	1.19	0.64	36	1.77	1.38	36	1.77	1.38	55	3.28	2.11	5	0.34	0.18	10	0.71	0.39
2006	100	5.89	3.89	3	0.07	0.10	13	0.74	0.51	3	0.22	0.12	17	1.22	0.66	36	1.82	1.41	36	1.82	1.41	55	3.36	2.16	5	0.35	0.18	10	0.73	0.40
2007	100	6.01	3.97	3	0.07	0.10	13	0.76	0.52	3	0.23	0.13	17	1.25	0.67	36	1.86	1.43	36	1.86	1.43	55	3.42	2.19	5	0.36	0.18	10	0.75	0.40
2008	100	6.12	4.03	3	0.07	0.11	13	0.77	0.53	3	0.23	0.13	17	1.27	0.68	36	1.89	1.46	36	1.89	1.46	55	3.48	2.23	5	0.37	0.19	10	0.76	0.41
2009	100	6.22	4.10	3	0.08	0.11	13	0.78	0.54	3	0.23	0.13	17	1.29	0.69	36	1.93	1.48	36	1.93	1.48	55	3.54	2.26	5	0.37	0.19	10	0.78	0.42
2010	100	6.31	4.16	3	0.08	0.11	13	0.80	0.55	3	0.24	0.13	17	1.31	0.70	36	1.95	1.50	36	1.95	1.50	55	3.59	2.30	5	0.38	0.19	10	0.79	0.43
2011	100	6.40	4.22	3	0.08	0.11	13	0.81	0.55	3	0.24	0.14	17	1.33	0.71	36	1.98	1.52	36	1.98	1.52	55	3.64	2.33	5	0.39	0.20	10	0.80	0.43

(Using PG&E Floor Area Projections)

	Large Office AR (10**6 sqft)	Large Office GWh	Large Office EUI	Restaurant AR (10**6 sqft)	Restaurant GWh	Restaurant EUI	Retail AR (10**6 sqft)	Retail GWh	Retail EUI	Grocery AR (10**6 sqft)	Grocery GWh	Grocery EUI	Warehouse AR (10**6 sqft)	Warehouse GWh	Warehouse EUI	School AR (10**6 sqft)	School GWh	School EUI	College AR (10**6 sqft)	College GWh	College EUI	Hospital AR (10**6 sqft)	Hospital GWh	Hospital EUI	Hotel AR (10**6 sqft)	Hotel GWh	Hotel EUI	Misc AR (10**6 sqft)	Misc GWh	Misc EUI
1983	193	198	1.03	33	2	0.05	201	29	0.14	54	2	0.04	134	16	0.12	138	61	0.44	84	37	0.44	66	36	0.55	50	1	0.03	257	25	0.10
1984	205	251	1.22	34	2	0.06	205	35	0.17	55	2	0.04	140	20	0.15	138	73	0.53	84	44	0.53	67	43	0.65	53	2	0.04	262	30	0.12
1985	215	331	1.54	34	2	0.07	209	45	0.22	56	3	0.05	147	28	0.19	139	92	0.66	85	56	0.66	69	55	0.80	56	3	0.05	270	39	0.14
1986	231	398	1.73	35	3	0.07	213	52	0.24	57	3	0.06	156	34	0.22	139	102	0.74	86	63	0.74	71	64	0.90	60	3	0.05	280	46	0.16
1987	241	457	1.89	35	3	0.08	219	58	0.27	59	4	0.06	165	40	0.24	140	112	0.80	86	69	0.80	73	71	0.98	66	4	0.06	289	53	0.18
1988	255	529	2.07	36	3	0.08	225	65	0.29	60	4	0.07	174	48	0.28	140	122	0.87	87	76	0.87	76	82	1.08	68	5	0.07	298	60	0.20
1989	262	574	2.19	36	3	0.09	231	70	0.30	62	4	0.07	181	54	0.30	141	128	0.91	88	80	0.91	78	90	1.15	70	5	0.08	303	64	0.21
1990	264	602	2.28	34	3	0.09	237	75	0.32	64	5	0.07	189	59	0.31	143	134	0.93	89	83	0.93	81	98	1.21	71	6	0.08	309	68	0.22
1991	270	636	2.35	37	3	0.09	241	78	0.32	66	5	0.08	194	64	0.33	147	140	0.95	91	86	0.95	81	102	1.26	69	6	0.09	314	71	0.23
1992	277	662	2.38	37	3	0.09	246	80	0.32	66	5	0.08	201	68	0.34	149	141	0.95	92	87	0.95	83	107	1.28	71	6	0.09	320	73	0.23
1993	285	707	2.48	38	3	0.08	251	83	0.33	67	5	0.08	209	76	0.36	150	144	0.96	93	90	0.96	85	115	1.35	72	7	0.10	326	77	0.24
1994	294	762	2.59	38	3	0.08	257	89	0.34	69	6	0.08	216	85	0.39	152	151	1.00	93	93	1.00	87	122	1.41	74	8	0.11	332	83	0.25
1995	302	802	2.65	39	3	0.08	264	93	0.35	70	6	0.08	223	92	0.41	153	154	1.00	94	94	1.00	89	128	1.44	75	8	0.11	338	87	0.26
1996	313	867	2.77	39	3	0.08	273	100	0.37	71	6	0.09	230	100	0.44	155	162	1.04	95	99	1.04	90	136	1.52	77	9	0.12	344	93	0.27
1997	322	930	2.89	40	3	0.08	283	108	0.38	73	7	0.09	238	109	0.46	156	168	1.08	96	103	1.08	92	146	1.59	78	10	0.13	350	99	0.28
1998	330	994	3.01	40	3	0.09	292	116	0.40	74	7	0.09	245	119	0.48	157	175	1.12	97	108	1.12	94	156	1.66	79	11	0.13	356	105	0.30
1999	338	1063	3.15	40	4	0.09	300	124	0.41	75	7	0.10	252	129	0.51	159	184	1.16	98	114	1.16	95	165	1.74	81	11	0.14	362	112	0.31
2000	347	1134	3.27	41	4	0.09	308	132	0.43	77	8	0.10	259	139	0.54	160	192	1.20	99	119	1.20	97	176	1.81	81	12	0.15	349	113	0.32
2001	353	1200	3.39	41	4	0.09	315	140	0.44	78	8	0.11	267	150	0.56	162	201	1.24	100	124	1.24	100	188	1.88	82	13	0.15	375	127	0.34
2002	361	1269	3.51	42	4	0.09	321	147	0.46	79	9	0.11	274	160	0.58	163	208	1.28	102	130	1.28	101	197	1.95	83	13	0.16	381	134	0.35
2003	368	1334	3.62	42	4	0.10	327	155	0.47	81	9	0.11	282	170	0.60	165	217	1.31	103	135	1.31	102	205	2.01	85	14	0.17	387	141	0.37
2004	376	1398	3.72	43	4	0.10	333	162	0.49	82	10	0.12	289	180	0.62	166	224	1.35	104	140	1.35	104	215	2.07	86	15	0.17	394	149	0.38
2005	384	1463	3.81	43	4	0.10	339	169	0.50	83	10	0.12	297	190	0.64	168	232	1.38	106	146	1.38	106	224	2.11	87	15	0.18	400	155	0.39
2006	391	1525	3.89	44	4	0.10	345	176	0.51	85	11	0.12	305	200	0.66	169	238	1.41	107	151	1.41	108	233	2.16	88	16	0.18	407	162	0.40
2007	400	1585	3.97	44	5	0.10	352	183	0.52	86	11	0.13	312	208	0.67	171	245	1.43	108	155	1.43	110	241	2.19	89	16	0.18	414	168	0.40
2008	407	1643	4.03	44	5	0.11	359	190	0.53	88	11	0.13	320	218	0.68	173	252	1.46	110	161	1.46	112	250	2.23	90	17	0.19	421	174	0.41
2009	415	1700	4.10	45	5	0.11	366	197	0.54	89	12	0.13	328	227	0.69	174	258	1.48	111	165	1.48	114	258	2.26	91	17	0.19	428	179	0.42
2010	423	1758	4.16	45	5	0.11	372	203	0.55	91	12	0.13	337	236	0.70	176	265	1.50	112	168	1.50	116	266	2.30	92	18	0.19	435	185	0.43
2011	431	1819	4.22	46	5	0.11	379	210	0.55	92	13	0.14	345	245	0.71	178	271	1.52	113	172	1.52	118	275	2.33	93	18	0.20	442	191	0.43

END

DATE
FILMED
11/06/92