Lawrence Berkeley Laboratory
UNIVERSITY OF CALIFORNIA

Physics Division

Presented at the IEEE Nuclear Science Symposium,
Santa Fe, NM, November 4, 1991, and to be
published in the Proceedings

Noise in a-Si:H p-i-n Detector Diodes

G. Cho, S. Qureshi, J.S. Drewery, T. Jing, S.N. Kaplan, H. Lee,
A. Mireshghi, V. Perez-Mendez, and D. Wildermuth

October 1991

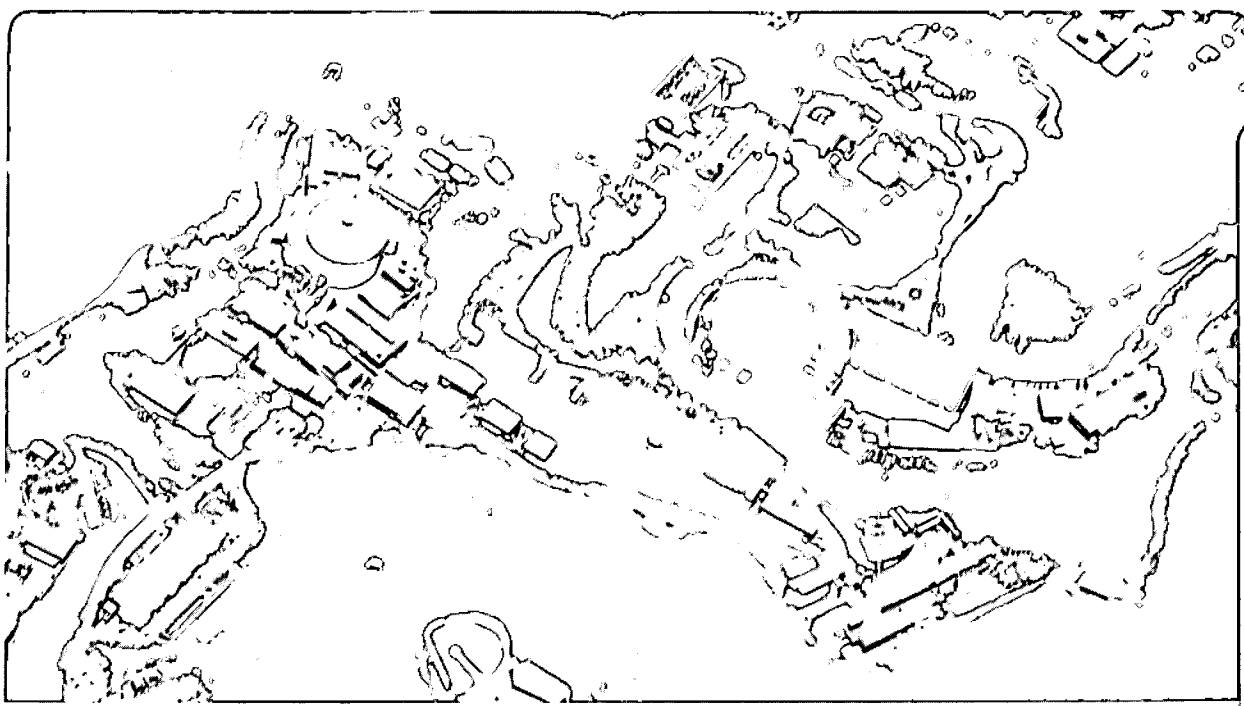

| LOAN COPY |
|Circulates |
|for 4 weeks| Bldg. 50 Library.
LBL-31415
Copy 2

Prepared for the U.S. Department of Energy under Contract Number DE-AC03-76SF00098

DISCLAIMER

This document was prepared as an account of work sponsored by the United States Government. Neither the United States Government nor any agency thereof, nor The Regents of the University of California, nor any of their employees, makes any warranty, express or implied, or assumes any legal liability or responsibility for the accuracy, completeness, or usefulness of any information, apparatus, product, or process disclosed, or represents that its use would not infringe privately owned rights. Reference herein to any specific commercial product, process, or service by its trade name, trademark, manufacturer, or otherwise, does not necessarily constitute or imply its endorsement, recommendation, or favoring by the United States Government or any agency thereof, or The Regents of the University of California. The views and opinions of authors expressed herein do not necessarily state or reflect those of the United States Government or any agency thereof or The Regents of the University of California and shall not be used for advertising or product endorsement purposes.

Lawrence Berkeley Laboratory is an equal opportunity employer.

DISCLAIMER

This document was prepared as an account of work sponsored by the United States Government. While this document is believed to contain correct information, neither the United States Government nor any agency thereof, nor the Regents of the University of California, nor any of their employees, makes any warranty, express or implied, or assumes any legal responsibility for the accuracy, completeness, or usefulness of any information, apparatus, product, or process disclosed, or represents that its use would not infringe privately owned rights. Reference herein to any specific commercial product, process, or service by its trade name, trademark, manufacturer, or otherwise, does not necessarily constitute or imply its endorsement, recommendation, or favoring by the United States Government or any agency thereof, or the Regents of the University of California. The views and opinions of authors expressed herein do not necessarily state or reflect those of the United States Government or any agency thereof or the Regents of the University of California.

Presented at IEEE Nuc. Sci. Symposium
Santa Fe, New Mexico, Nov. 1991

LBL-31415

Noise in a-Si:H p-i-n Detector Diodes

G. Cho, S. Qureshi, J. S. Drewery, T. Jing, S. N. Kaplan,
H. Lee, A. Mireshghi, V. Perez-Mendez, and D. Wildermuth
Lawrence Berkeley Laboratory, University of California, Berkeley, CA 94720

Abstract

Noise of a-Si:H p-i-n diodes (5 ~ 50 μm thick) under reverse bias was investigated. The current dependent 1/f type noise was found to be the main noise component at high bias. At low bias the thermal noise from a series resistance of the p-layer and of the metallic contacts is the dominant noise source which is unrelated to the reverse current through the diode. The noise associated with the p-layer resistance decreased significantly on annealing under reverse bias, reducing the total zero bias noise by a factor of 2 approximately. The noise recovered to the original value on subsequent annealing without bias. In addition to the resistive noise there seems to be a shaping time independent noise component at zero biased diodes.

I. INTRODUCTION

Hydrogenated amorphous silicon(a-Si:H) has been suggested for use in radiation detectors[1,2] for particle physics and medical imaging applications. For direct detection of ionizing radiation such as multicharged or minimum ionizing particles, an a-Si:H p-i-n diode with a thick i-layer can be used. A thin photodiode coupled with a scintillating layer[3] can be used to detect X-rays efficiently. In both cases the p-i-n diodes are operated under a reverse bias and generate noise which is added to the noise of the front-end amplifier and thus further limits the sensitivity and spatial resolution of the position sensitive detector system.

In this paper, we have studied the characteristics of various noise components in reverse biased a-Si:H pin diodes with 5 ~ 50 μm thick i-layers. A simple formulation of these noise components in the case of a simple CR-RC pulse shaper was made and used to fit the measured noise data.

II. MATERIALS AND METHODS

A. Sample Diodes

The n(~ 50 nm)/i(5 ~ 50 μm)/p(~ 50 nm) layers of a-Si:H were deposited in sequence by conventional PECVD methods on a glass substrate coated by a thin (~ 50 nm) Cr layer for the bottom electrode. The top electrode was made of an evaporated Cr or Pd layer and then etched to form a circular contact with 2 ~ 3 mm radius. To reduce the surface leakage current through the top p-layer we also etched the p-layer around the top contact. This reduced the reverse current by a factor of 10 ~ 100. Finally a highly conductive silver epoxy was used to connect the bottom and top contacts to the external circuitry respectively. The thickness of the i-layer was determined by capacitance measurement.

This work was supported by the Director, Office of Energy Research, office of High Energy and Nuclear Physics, Division of High Energy Physics, and Office of Health and Environmental Research, Division of Physics and Technological Research of the U.S. Department of Energy under contract No. DE-AC03-76SF00098.

B. Detector Noise Measurement

Conventional radiation detector electronics was used to study the noise of reverse biased diodes as shown in Fig. 1. The detector signal is integrated by an AC coupled charge-sensitive preamplifier and is shaped into a voltage pulse form by a following shaping amplifier and is analyzed by a pulse height spectrum analyzer.

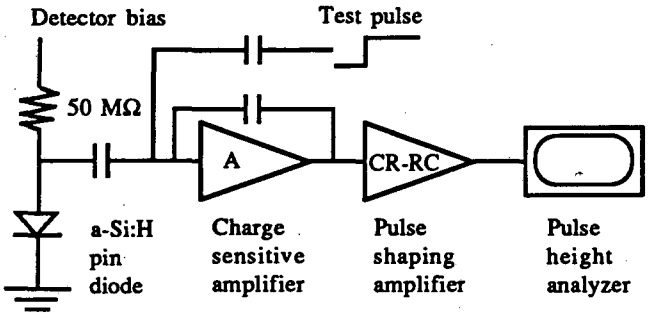

Fig. 1. Schematic diagram of standard nuclear electronics used for a-Si:H p-i-n diode noise measurement.

In the absence of a radiation signal, the total electronic noise of the detector and amplifier system is measured by a broadening of the output pulse height of the shaping amplifier for a given test charge input. The background amplifier noise is separately measured by replacing the diode with an equivalent capacitor. Then the noise contribution of the detector is determined by subtracting the background amplifier noise from the total noise of the system.

C. Measurement of Noise Power Spectra

When thick (20 ~ 50 μm) a-Si:H p-i-n diodes are used as radiation detectors for ionizing radiation such as charged particles, they are usually operated at high biases to deplete the i-layer fully in order to obtain complete charge collection. In such cases, the reverse current is often large and its noise contribution is the main limiting factor of the detector sensitivity. The current related noise components were studied in the frequency domain using the setup[4] shown in Fig. 2. Noise is picked up by an ac coupled low noise charge-sensitive amplifier, and amplified by a wide-band amplifier; then it is sampled by a digital oscilloscope through Butterworth filters. Finally its frequency spectrum is calculated using a fast Fourier transform.

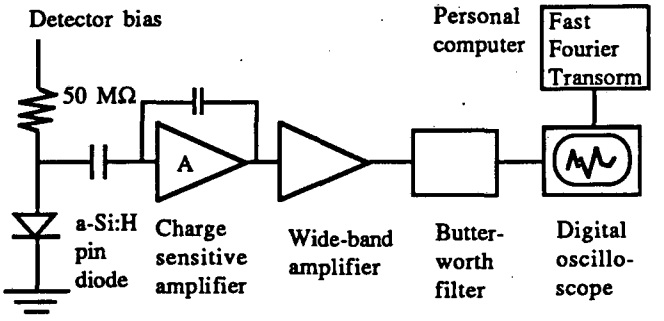

Fig. 2. Schematic of noise power spectrum measurement setup.

D. Measurement of Contact Resistance

The contact resistance of a p-i-n diode in series with its capacitive component was measured by a pulse attenuation technique as shown in Fig. 3. The output pulse height is related to the series contact resistance R_c by the following expression

$$V_o \propto \frac{R_2}{R_C + R_1 + R_2} \qquad (1)$$

By varying R_1 we can determine R_c.

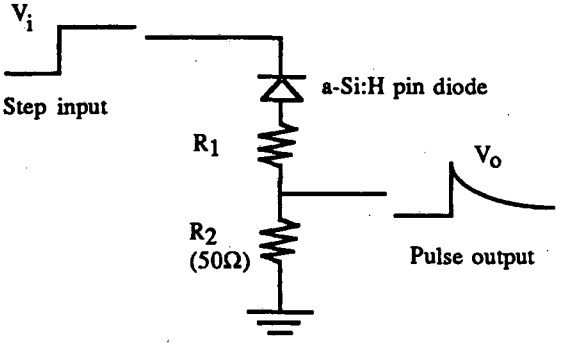

Fig. 3. Measurement setup for diode contact resistance using a fast rising voltage step.

D. Reverse Bias Annealing

The resistivity of doped layers of a-Si:H has been reported to decrease after reverse bias annealing[5]. In order to identify the contribution of the p-layer resistance, we annealed sample diodes at 180 °C for 2 hrs under reverse bias of ~ 10 volts/μm. Then the diodes were reannealed at the same condition without applying any bias. Before and after each annealing step, the noise of sample diodes was measured at zero bias.

III. RESULTS AND DISCUSSION

A. Equivalent Noise Charge of p-i-n Diode

Fig. 4. shows the measured I-V and noise data of a 26 μm thick a-Si:H p-i-n detector diode(Sample #A). The measured equivalent noise charge(ENC) of the detector diode is fitted well by the sum of three noise components of the following equation;

$$N^2 = K_1 I + K_2 I^2 + K_3 \qquad (2)$$

where N is the rms value of noise in unit of electrons and I is the reverse current. The terms in the right hand side of the equation are (a) the shot noise component, (b) current dependent 1/f noise and (c) bias independent or constant noise. K_1, K_2 and K_3 are fitting parameters.

From the above analysis the equivalent circuit of a p-i-n diode for noise calculation is drawn in Fig. 5. where the current dependent noise components are represented as current noise sources and the current independent noise component is represented as a voltage noise source.

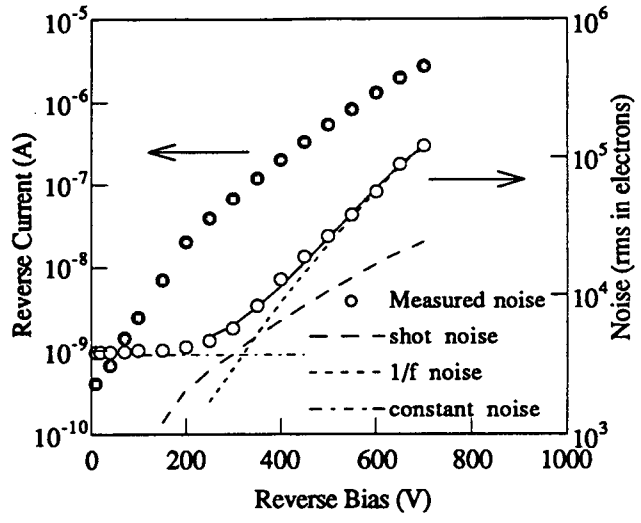

Fig. 4. Reverse current and noise of a 26 μm thick a-Si:H p-i-n diode(Sample #A). The solid line is the calculated sum of three noise components. Shaping time used is 2.5 μsec.

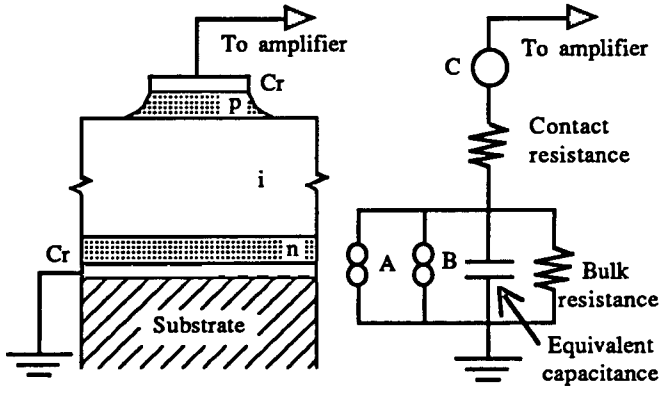

Fig. 5. Cross-sectional diagram of an a-Si:H p-i-n diode and its equivalent circuit for noise modelling. Noise sources are; (A) shot noise, (B) 1/f noise and (C) constant noise.

B. Shot Noise and Flicker Noise

Fig. 6 shows the frequency spectra of the equivalent noise current power from the sample diode #A at biases of 0, 200, 400 Volts. At low frequency, 1/f type noise is dominant; at high frequency shot noise, is found to be dominant. As the applied bias increases up to 700 V with a corresponding increase in the reverse current, the 1/f type noise domain increases up to ~ 500 kHz.

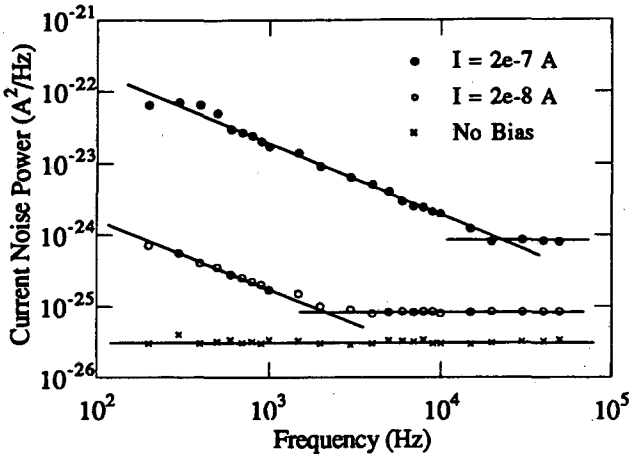

Fig. 6. Measured power spectra of the input equivalent noise current of reverse biased a-si:H p-i-n diode.

The measured noise power of the shot noise component increases almost linearly with the reverse current which is consistent with the general theory of shot noise in any electronic device. The noise power of shot noise[6] in the frequency domain is

$$\langle i_{shot}^2 \rangle = 2\,q\,I\,\Delta f \qquad (3)$$

where q is the electron charge. The rms value of the equivalent noise charge for a simple CR-RC shaping amplifier is estimated from the following equation[7];

$$N_{shot}^2 = \left(\frac{e}{q}\right)^2 \times \int_0^\infty \frac{\langle i_{shot}^2 \rangle}{\Delta f} \times \frac{|G|^2}{\omega^2} df = \left(\frac{e}{q}\right)^2 \times 2\,q\,I \times \frac{\tau}{8} \qquad (4)$$

where e is the base of natural logarithm, τ is the shaping time of the CR-RC shaping amplifier, and $|G|$ is the transfer function of a simple CR-RC filter given by

$$|G|^2 = \frac{(\omega\tau)^2}{\left(1 + (\omega\tau)^2\right)^2} \qquad (5)$$

where $\omega = 2\pi f$.

Flicker or 1/f type noise in a-Si:H has been studied for various device configurations[8,9]. Its origin is believed to be the fluctuation of the charge carrier density due to trapping and detrapping by distributed trapping centers in the band gap[10]. The magnitude of the measured 1/f noise component is proportional to the square of the reverse current[9] with a relationship;

$$\langle i_{1/f}^2 \rangle = K_f \times \frac{I^2}{f}\,\Delta f \qquad (6)$$

By applying the same equation used for the shot noise calculation the equivalent noise charge due to 1/f noise becomes

$$N_{1/f}^2 = \left(\frac{e}{q}\right)^2 \times \int_0^\infty \frac{\langle i_{1/f}^2 \rangle}{\Delta f} \times \frac{|G|^2}{\omega^2} df \approx \left(\frac{e}{q}\right)^2 \times K_f\,I^2 \times 6\,\tau^2 \qquad (7)$$

where we took the lower limit of frequency in the integration to be 100 Hz instead of zero to avoid divergence problems. This approximation has a physical meaning in that the lower boundary energy of deep trapping of free electrons in the intrinsic a-Si:H lies ~ 0.6 eV below the conduction band mobility edge. The dimensionless proportionality constant K_f measured from diodes with different thickness is plotted in Fig. 7. and it decreases as the thickness of the i-layer increases[9].

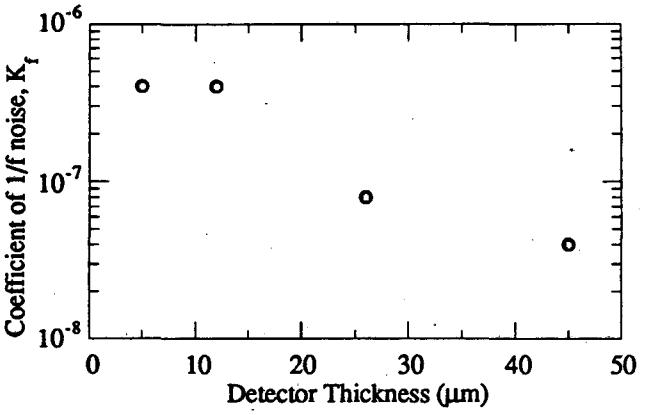

Fig. 7. Thickness dependence of 1/f noise coefficient.

C. Bias Independent Noise

The constant frequency noise component, K_3 in the equation (2), is not related to the reverse current of the diode but originates from the material and structure of the a-Si:H p-i-n diode. The most

plausible origin is the resistance of the p- and n-layers and of the metallic contacts[11] on them. These resistive components are in series with each other and also in series with the equivalent capacitance of the detector diode. The p- and n-layers are considered as a conductive or resistive component rather than a dielectric component because the charge carriers in doped a-Si:H layers can freely respond to a potential variation across the diode in a frequency range determined by the shaping time of interest (0.5 ~ 5 μsec). Hence the equivalent capacitance consists of the thick i-layer only. The measured contact resistance of the sample diode using the pulse technique was ~ 150 Ω.

Any resistive component generates thermal noise, Nyquist noise, and its noise power is

$$\langle v_R^2 \rangle = 4\,kTR\,\Delta f \qquad (8)$$

where k is the Boltzmann constant and T is the temperature. For the CR-RC shaping amplifier, the equivalent noise charge due to a contact resistance R in series with the detector capacitor C is

$$N_R^2 = \left(\frac{e}{q}\right)^2 \times \int_0^\infty \frac{\langle v_R^2 \rangle}{\Delta f} \times C^2|G|^2\,df = \left(\frac{e}{q}\right)^2 \times 4\,kTR \times \frac{C^2}{8\tau} \qquad (9)$$

The current independent noise component, K_3, was measured at zero bias as a function of shaping time and then it was compared with thermal noise, N_R, of true resistors connected in series with a substitute equivalent capacitor instead of the detector in the noise measurement setup. The results are shown in Fig. 8. The slope of the noise data of a-Si:H p-i-n diode in log(ENC) vs log(τ) plot is smaller than that of the Nyquist noise from resistors. This implies that the bias-independent noise is not purely resistive but can be considered as a sum of a resistive thermal noise component and a shaping time independent noise component. In the frequency spectrum, the latter could be a 1/f type voltage noise source in series with the detector capacitance although its origin is not clearly understood.

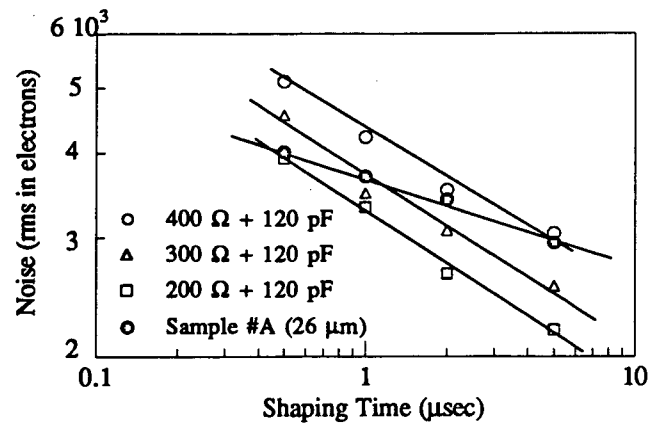

Fig. 8. Zero bias noise of a 26 μm a-Si:H p-i-n diode(Sample #A) vs shaping time compared with measured noise from capacitor resistor combination

Fig. 9 shows the effect of bias annealing on the contact resistance of a 9 μm thick p-i-n diode (Sample #B). After reverse bias annealing, the zero bias noise drops by a factor of 2 which means that the contact series resistance dropped by a factor of $\sqrt{2}$. Successive annealing of the same sample without bias restored the noise to the original value. This result indicates that the main source of series contact resistance is due to the finite resistivity of the p-layer whose conductivity has been shown to be affected by reverse bias annealing[5].

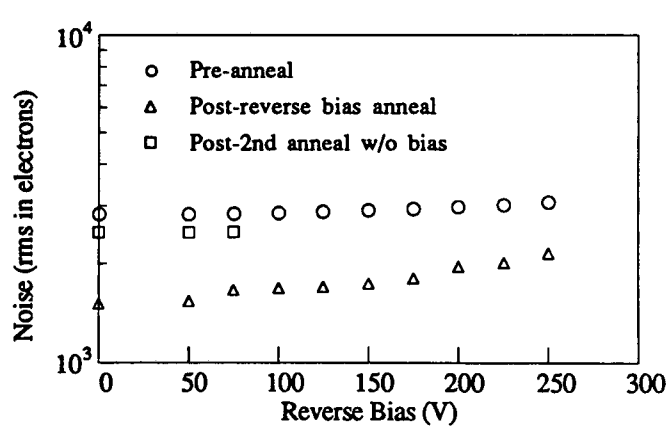

Fig. 9. Measured noise in a 9 μm thick a-Si:H p-i-n diode(Sample #B). Zero bias noise drops by a factor of 2 before and after reverse bias annealing at 150 °C and 20 V.

IV. CONCLUSION

Noise of a-Si:H pin detector diodes under reverse bias was measured and analyzed into three components; shot noise, 1/f noise and bias independent thermal noise. At high bias with large reverse current or at large shaping time 1/f noise becomes dominant. At low bias or at small shaping time(< 1μs) the bias independent thermal noise from series resistance is important. Reverse bias annealing effect on the zero bias noise confirms that the main series resistance is due to the resistance of the p-layer.

V. REFERENCES

[1] S. N. Kaplan, J. Morel, V. Perez-Mendez and R. A. Street, "Detection of charged particles in amorphous silicon layers," *IEEE Trans. Nuc. Sci.*, NS-33, pp. 351-354, 1986.

[2] B. Eqer and A. Karar, "Amorphous semiconductors for particle detection: Physical and technical limits and possibilities," *Nucl. Instr. and Meth.*, A275, pp. 558-563, 1989.

[3] V. Perez-Mendez, "Ch. 8. Charged Particle, Gamma Ray, and Light Detection in Amorphous Silicon Devices," in *Amorphous and Microcrystalline Semiconductor Devices: Optoelectronic Devices*, ed. J. Kanicki, Artech House, 1991.

[4] G. Cho, J. S. Drewery, I. Fujieda, S. N. Kaplan, V. Perez-Mendez, S. Qureshi and R. A. Street, "Measurements of 1/f noise in a-Si:H pin diodes and thin film transistors," *Mat. Res. Soc. Symp. Proc.*, vol. 192, pp. 393-398, 1990.

[5] R. A. Street and J. Kakalios, "Bias annealing of doped amorphous silicon," *Phil. Mag. B.*, vol. 54, L21-L26, 1986.

[6] Van der Ziel, *Noise,: Sources, Characterization, Measurement*, Prentice Hall Inc., 1970, pp. 89.

[7] F. S. Goulding and D. A. Landis, "Signal processing for Semiconductor detectors," *IEEE Trans. Nuc. Sci.*, NS-29, pp. 1125-1141, 1982.

[8] A. D'Amico, G. Fortunato and C. M. van Vliet, "Noise measurements in thin films of amorphous silicon," *J. Non-Crystal. Solids*, vol. 77 & 78, pp. 499-502, 1985.

[9] F. Z. Bathaei and J. C. Anderson, "Flicker noise in hydrogenated amorphous-silicon Schottky diodes," *Phil. Mag. B.*, vol. 57, pp. 259-269, 1988.

[10] F. Z. Bathaei and J. C. Anderson, "Electrical noise measurements in intrinsic amorphous silicon," *Phil. Mag. B.*, vol. 55, pp. 87-100, 1987.

[11] H. Schade and Z. E. Smith, "Contact resistance measurements for hydrogenated amorphous silicon solar cell structures," J. *Appl. Phys.*, vol. 59, pp. 1682-1687, 1986.

LAWRENCE BERKELEY LABORATORY
UNIVERSITY OF CALIFORNIA
INFORMATION RESOURCES DEPARTMENT
BERKELEY, CALIFORNIA 94720