LBL-31427
UC-421

Lawrence Berkeley Laboratory
UNIVERSITY OF CALIFORNIA

Accelerator & Fusion Research Division

Presented at the 1991 Accelerator Instrumentation Workshop, Newport News, VA, October 28-31, 1991, and to be published in the Proceedings

The Diagnostics System for the Multiple Heavy Ion Beams Induction Linac Experiment, MBE-4

S. Eylon for the MBE-4 Team

September 1991

For Reference

Not to be taken from this room

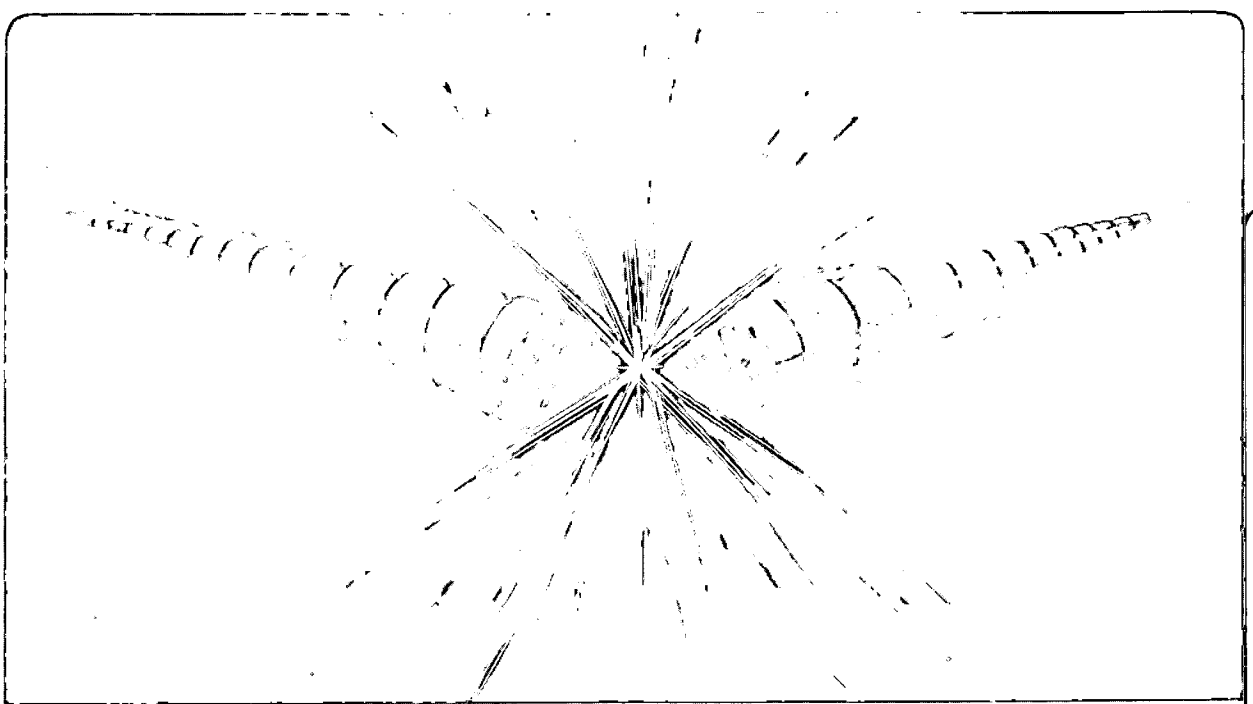

LBL-31427
Copy 1
Bldg. 50 Library.

Prepared for the U.S. Department of Energy under Contract Number DE-AC03-76SF00098

DISCLAIMER

This document was prepared as an account of work sponsored by the United States Government. Neither the United States Government nor any agency thereof, nor The Regents of the University of California, nor any of their employees, makes any warranty, express or implied, or assumes any legal liability or responsibility for the accuracy, completeness, or usefulness of any information, apparatus, product, or process disclosed, or represents that its use would not infringe privately owned rights. Reference herein to any specific commercial product, process, or service by its trade name, trademark, manufacturer, or otherwise, does not necessarily constitute or imply its endorsement, recommendation, or favoring by the United States Government or any agency thereof, or The Regents of the University of California. The views and opinions of authors expressed herein do not necessarily state or reflect those of the United States Government or any agency thereof or The Regents of the University of California and shall not be used for advertising or product endorsement purposes.

Lawrence Berkeley Laboratory is an equal opportunity employer.

This report has been reproduced directly from the best available copy.

DISCLAIMER

This document was prepared as an account of work sponsored by the United States Government. While this document is believed to contain correct information, neither the United States Government nor any agency thereof, nor the Regents of the University of California, nor any of their employees, makes any warranty, express or implied, or assumes any legal responsibility for the accuracy, completeness, or usefulness of any information, apparatus, product, or process disclosed, or represents that its use would not infringe privately owned rights. Reference herein to any specific commercial product, process, or service by its trade name, trademark, manufacturer, or otherwise, does not necessarily constitute or imply its endorsement, recommendation, or favoring by the United States Government or any agency thereof, or the Regents of the University of California. The views and opinions of authors expressed herein do not necessarily state or reflect those of the United States Government or any agency thereof or the Regents of the University of California.

The Diagnostics System for the Multiple Heavy Ion Beams Induction Linac Experiment, MBE-4†

S. Eylon for the MBE-4 Team*
Lawrence Berkeley Laboratory
1 Cyclotron Road
Berkeley, CA 94720

Abstract

MBE-4 is a four beam current amplifying induction linac experiment conducted at LBL as a part of the Heavy Ion Fusion Accelerator Research (HIFAR) program for studying accelerator physics issues of a heavy ion driver for inertial fusion. The four ion beams (Cs^+,10 mA) are focused by electrostatic quadrupoles and accelerated from about 200 keV to 900 keV through 24 induction gaps. Current amplification of up to nine times is achieved while the beam pulse duration is compressed from about 3 μs to 0.5 μs. The diagnostic system enables the complete time-resolved 2-D transverse phase space distribution of the beam to be measured. Reduction of the raw data yields the beam current, current profile, emittance, centroid position and angle as well as the beam envelope parameters. In addition, the longitudinal energy distribution is obtained from measurements using a calibrated electrostatic spectrometer. The diagnostic system hardware, as well as the the data acquisition and reduction routines, are controlled by an IBM pc-XT. We shall describe the diagnostic system and discuss its performance in view of the specific issues which result from the acceleration and amplification of multiple beams of heavy ions.

1. Introduction.

The Heavy Ion Fusion Accelerator Research Program (HIFAR) at LBL is assessing the multiple-beam induction linac as an inertial fusion driver.[1] In this concept multiple parallel beams of heavy ions are continually amplified in current and in voltage as they are accelerated to the parameters required to ignite an inertial fusion target (~ 10 Gev, 500 TW, 10ns). The MBE-4[2] is a four beam current amplifying ion induction linac experiment. This experiment models much of the accelerator physics of the electrostatically focused section (lower end) of a fusion driver. The four space-charge dominated, Cs^+, ion beams share the longitudinal acceleration-gap structures and the corresponding driving pulse-forming networks, while being transversely contained in four separate focusing quadrupole channels. The 5-10 mA beams are accelerated from approximately 200 keV to one MeV, amplified to final currents of about 20-90 mA and compressed from a duration of about 3 ms to about 0.3 ms by 24 accelerating gaps. Experiments[3] of particular interest on the MBE-4 are the possibilities of interactions between the multiple beams, longitudinal beam control i.e. acceleration, current amplification and pulse

† Work supported by the Director, Office of Energy Research, Office of Basic Energy Sciences, Advanced Energy Projects Division, U.S. Department of Energy under Contract No. DE-AC03-76SF00098.

* D. Keefe, T.J. Fessenden, A. Faltens, A.I. Warwick, C. Kim, H. meuth, T. Garvey, D.E. Gough, C. Lionberger, S. McCreight, and B. Ghiorso

ends, and the preservation of the longitudinal and transverse normalized beam emittance along the transport channel with and without acceleration for centered and displaced beams. This paper will describe the MBE-4 diagnostics and control system used in the course of the above studies.

2. Diagnostic requirements for the MBE-4.

Diagnostic access on the MBE-4 is possible on various axial locations (Fig. 1). Each location (diagnostic "box") permits, at four port holes, the attachment of diagnostic devices, most of which, at least in principle, can monitor the four beams independently. All diagnostic measurements derive from measuring the positive-ion current (or, by 50 W termination, from a voltage measurement), and are thus electromagnetic in nature. Essentially the following measurements can be performed:

Total current, via Faraday cup (Fig. 2a).
Transverse position and current density profile (Fig. 2b).
Transverse position and velocity (angular) distribution via a double slit & a Faraday cup (Fig. 2c).
Longitudinal velocity (energy) distribution, via an electrostatic bending beam energy analyzer (Fig. 2d).
Details of the coupling and biasing circuitry are given only in Fig. 2, and are omitted elsewhere.
Acceleration pulsers waveforms are monitored, via resistive voltage dividers placed across the acceleration gaps.

2.1. Time resolution

All measurements have to be fully time resolved to investigate in detail the beam pulse dynamics in the pulse frame, especially head and tail. The determination of position, velocity, and energy distribution require scans through the transverse, or longitudinal parameter space, respectively; for measuring the transverse position and velocity distribution, i. e. the position of the "radius" slit, and of the "angle" slit are repetitively, on a shot to shot basis, adjusted by computer controlled stepping motors. This is a time consuming process, where the current wave generated in each shot is recorded and stored by a digital storage oscilloscope and then transferred into a computer memory. While the determination of the machine total current pulses will require a signal bandwidth about 50 to 100 MHz, the requirement for position, velocity, and energy is more stringent. This is because these parameters may rapidly vary during a single pulse. For example, the already mentioned pulse compression along the MBE-4 leads to a 30% head to tail velocity difference along the beam bunch. The variation of the corresponding longitudinal particle energies within the current pulse is therefore even more pronounced. Here, a signal bandwith of 200 MHz, or even higher is needed. For a scan of the longitudinal energy, the energy analyzer adjusts (Fig. 5), again on a shot to shot basis, the voltages (+/- HV). This procedure is also computer controlled. The high-voltage potential selects,

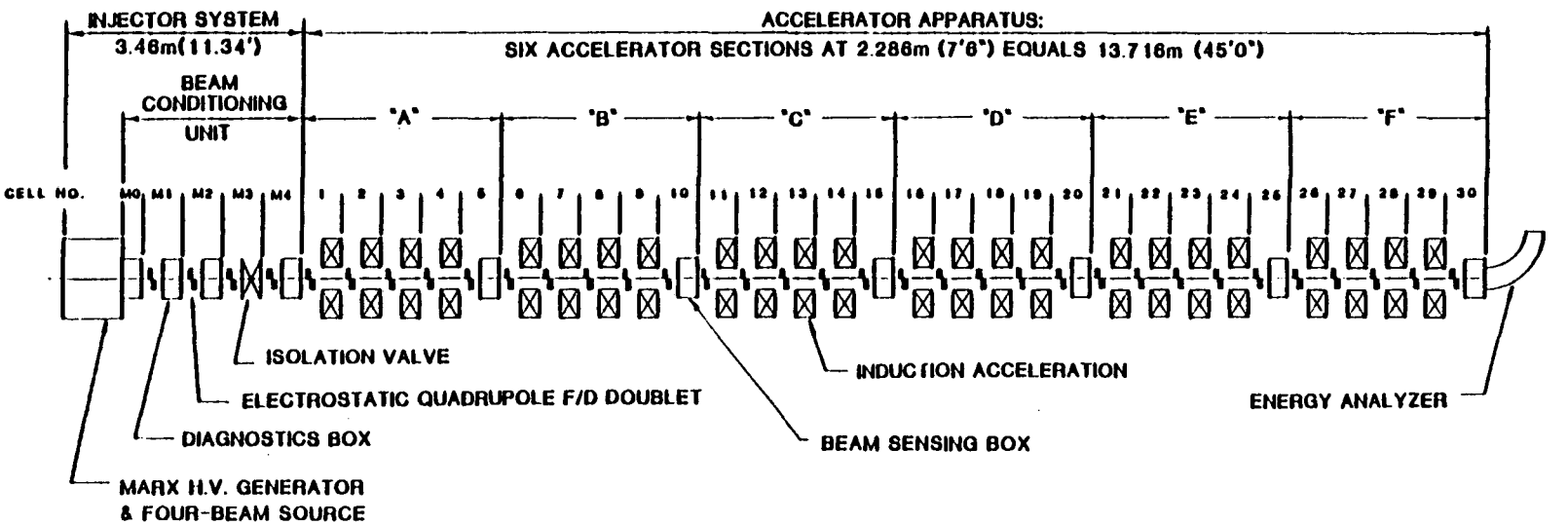

XBL 854-2077

Fig. 1. The Multiple Beam Experiment system layout.

Fig. 2. The diagnostics system measuring setups:

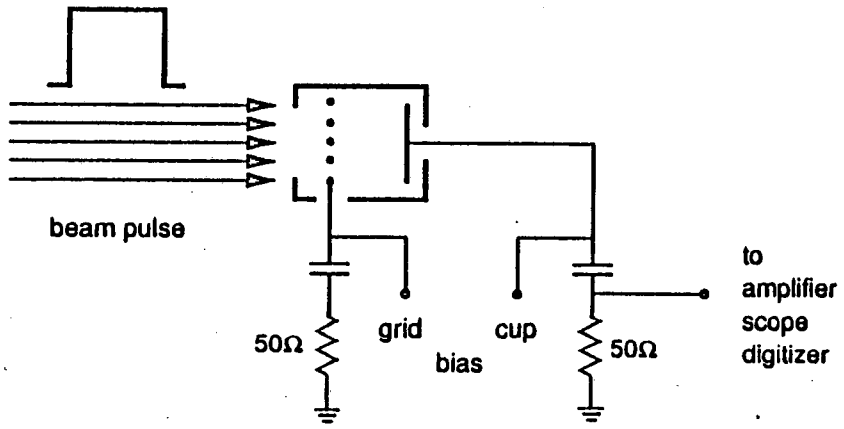

Fig. 2(a) Faraday cup current measurement.

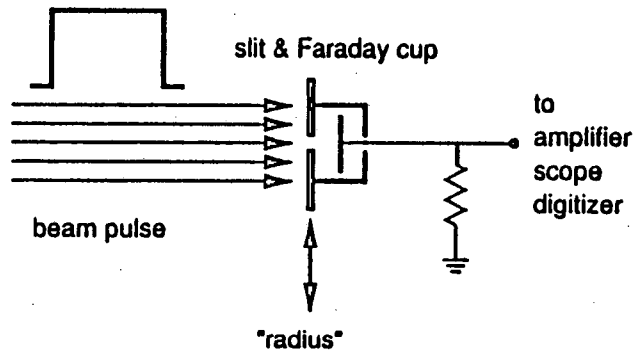

Fig. 2(b) Transverse position and profile measurement. (single slit)

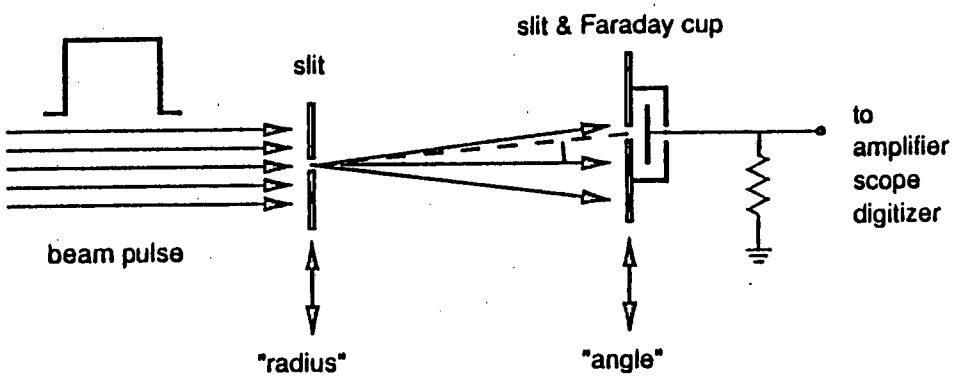

Fig. 2(c) Transverse position and velocity measurement. (two slits)

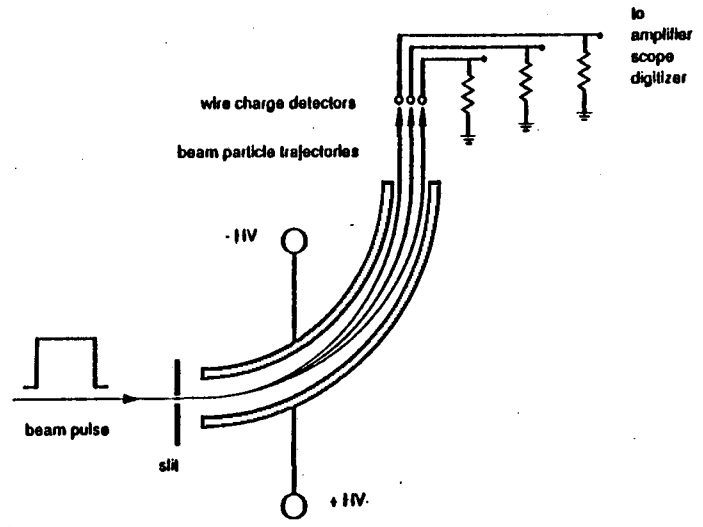

Fig. 2(d) Electrostatic energy analyzer.

from the beam pulse, those particles with a specific energy by forcing them onto a circular-sigmented trajectory. Those particles impinging on a wire or a the slit-Faraday cup will generate a current waveform which is again stored in the storage oscilloscope and then transferred into the computer. The composite energy distribution along the beam can be obtained by a complete scan of the analyzer high voltage settings.

2.2. Dynamic range

The voltage waveforms of the emittance (double slit) and the energy measurements are amplified by about 30 db, or thirty fold, using commercial amplifier modules by Comlinear Corporation. The amplifiers are placed as close as possible to the measuring devices to reduce noise effects during the the transfer of the signal to the oscilloscope. The signal strength is further enhanced about tenfold in the Faraday cup itself by employing a specific biasing polarity. For an absolute current cup measurement, the current collector is biased positive, and the grid negative. This insures that secondary electrons freed by the impinging ions are retained and do not distort the current reading. On the other hand, by reversing the bias polarity the secondary electrons may be used for increasing the cup signal. The raw signals for the energy analysis are of the order of 10 to 100mV. For the measurements of the beam transverse properties, particularly for the position and velocity distributions, the signal strength after the 30 db amplification is of the order of 1 to mV. This signal is low when compared with the energy signal because, here, the beam pulse is resolved into two characteristic quantities, namely radius (1st slit) and angle (2nd slit) leaving much less flux at a given position and transverse velocity.

3. Data Acquisition and processing

Data from the diagnostic probes are acquired using digital oscilloscopes controlled by IBM PC's. A set of programs[4] written in Pascal language performs various acquisition and analysis tasks. These programs are graphically-oriented and allow the experimenter to set up, perform, and examine the results of a variety of measurements. They automate the time-consuming multiple-pulse measurements and the tedious recording of diagnostic configurations.

The program READ reads whatever waveform is currently stored in the oscilloscope, displays it on the computer monitor, and stores it in a file. The programs WRITE and WAVEDISP read files produced by READ and display them both on the monitor and the oscilloscope, or on the monitor only, respectively. The program CONFIG allows the user to maintain a database of probe characteristics and to select the probe and location to be used in the current measurement. The program SETUP allows the user to control various aspects of the emittance scans and energy analyzer scans, such as the number of steps in the measurement. The program

VOLTS allows the user to interactively set voltages on an energy analyzer, pulse the machine, and observe the results. The program ANALYZER acquires data from energy analyzers by pulsing the machine while the analyzer voltage is adjusted to a series of values. SHOW is a data analysis and display program for files produced by ANALYZER. The program MOVE allows the user to interactively move harps, slit cups, and Faraday cups, and to fire the machine, as he observes the results. The PHASE program allows one to interactively move slit cups, pulse the machine and observe the resulting slit-cup signals plotted in phase-space coordinates; it is also used to specify the boundary of the region that will be scanned during an emittance measurement. The SCAN program performs an actual emittance measurement, pulsing the machine while the dual-slit diagnostic probe is set at a series of positions; it displays an ongoing plot of the results and stores the results in a file. The DISPLAY program provides various displays and calculated results based on files produced by SCAN. A typical DISPLAY output following an emittance (double slit) measurement contains the calculated time varying beam parameters like current, current profile, radius, divergence angle, centroid position and angle, emittance and the beam phase space distribution at any given time. Figure 3a show a beam current density profile and Fig. 3b the beam phase space distribution i.e. the angle X' (transverse velocity) distribution at a given position X and time, were the current measured at that point is given by the line length.

4. The diagnostics system performance.

The diagnostics system (including the accelerator) performance can demonstrated through measurements taken when performing evaluation experiments and other typical accelerator physics studies experiments.

Faraday-cups total current waveforms (Fig. 4) of the MBE-4 four beams measured at injection in and at end of the accelerator. The beam current pulses which are compressed from about 3ms to about o.3 ms show a current amplification of about 9. The current waveforms shown presents an overlay of waveforms taken in 25 different machine shots showing a low overall system jitter.

Faraday-cups total current waveforms (Fig. 4) of the MBE-4 four beams measured at injection in and at end of the accelerator. The beam current pulses which are compressed from about 3ms to about o.3 ms show a current amplification of about 9. The current waveforms shown presents an overlay of waveforms taken in 25 different machine shots showing a low overall system jitter.

Faraday-cups total current waveforms (Fig. 4) of the MBE-4 four beams measured at injection in and at end of the accelerator. The beam current pulses which are compressed from about 3ms to about o.3 ms show a current amplification of about 9. The current waveforms shown presents an overlay of waveforms taken in 25 different machine shots showing a low overall system jitter.

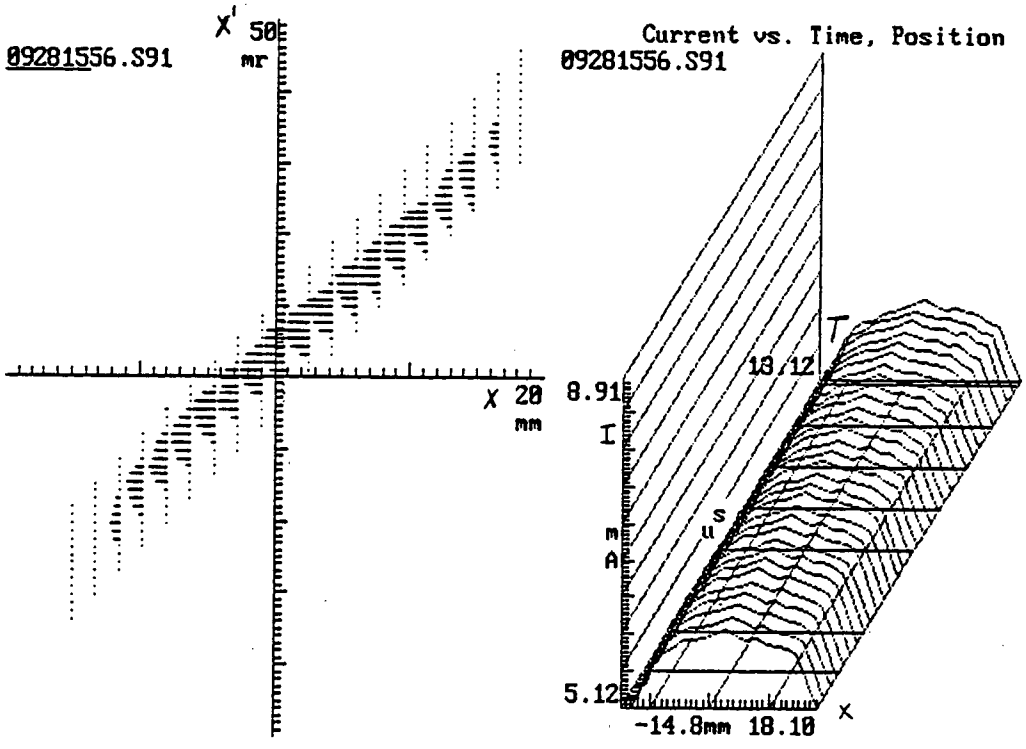

Fig. 3 DISPLAY output :
(a) Beam distribution in the phase space, angle (transverse velocity) X' at a position X.
(b) Beam profile, current I at a position X at a given time T.

Faraday-cups total current waveforms (Fig. 4) of the MBE-4 four beams measured at injection in and at end of the accelerator. The beam current pulses which are compressed from about 3ms to about o.3 ms show a current amplification of about 9. The current waveforms shown presents an overlay of waveforms taken in 25 different machine shots showing a low overall system jitter.

Emittance measurements were taken along the MBE-4 transport channel over a period of about two months to asses the emittance measurement and the system reproducibility. The scanners in each diagnostic were replaced several times while other beam parameters were kept constant. Fig. 5a shows the measured beam minimum and maximum emittance at each diagnostics station along the MBE-4. One can see that the emittance measurement reproducibility is within 5%. The emittance variations observed along the transport section were found to be due to the beam being displaced off the machine center. Figure 5b shows the beam un-normalized emittance along the MBE-4 for a drifting beam and an accelerated beam. One can see that the accelerated beam un-normalized emittance decreases along the MBE-4, i.e. the normalized emittance is conserved.[5]

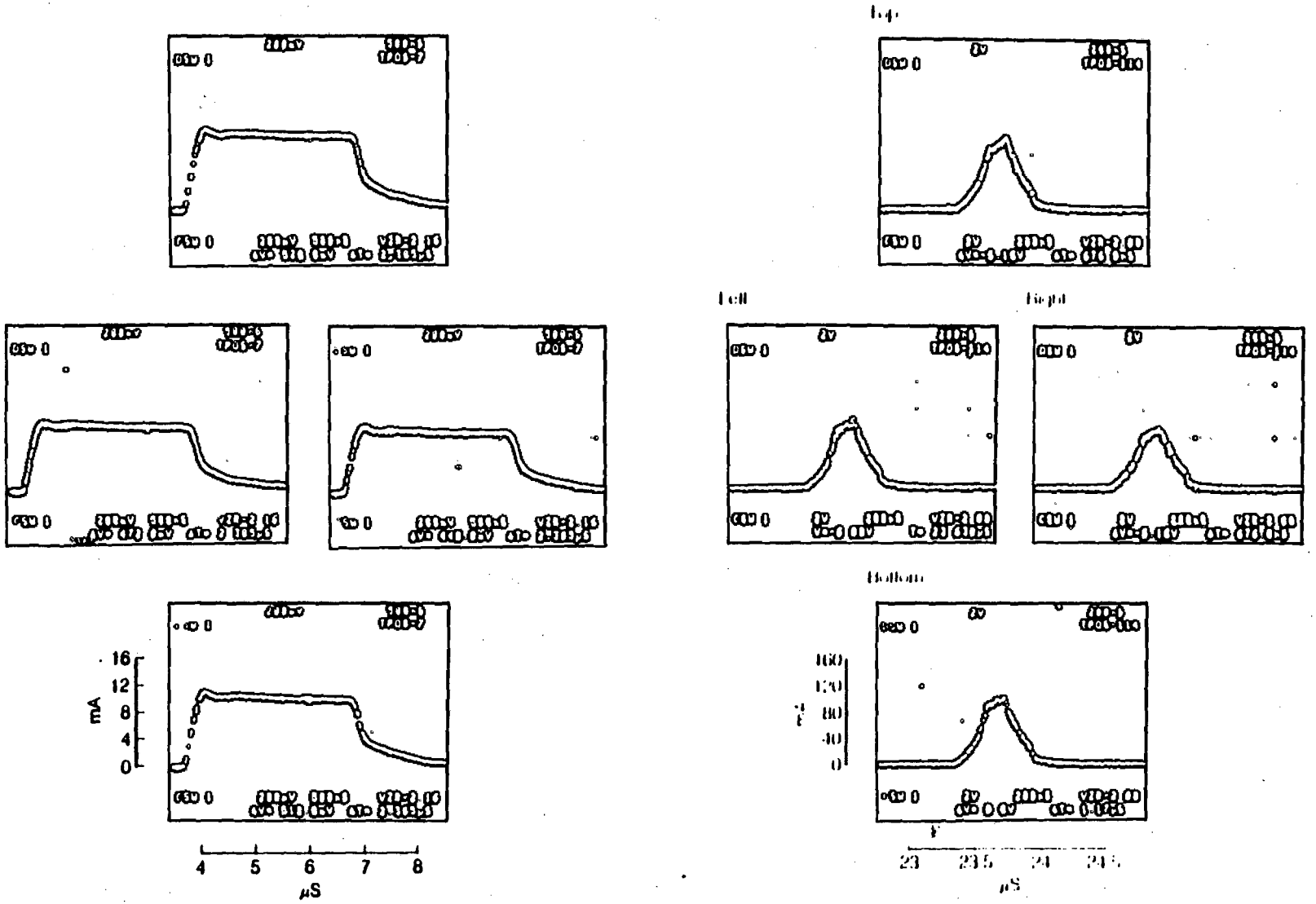

Fig. 4. Current amplification in MBE-4 (a) current at injection in accelerator (b) current at end of accelerator.

variations observed along the transport section were found to be due to the beam being displaced off the machine center. Figure 5b shows the beam un-normalized emittance along the MBE-4 for a drifting beam and an accelerated beam. One can see that the accelerated beam un-normalized emittance decreases along the MBE-4, i.e. the normalized emittance is conserved.[5]

Energy measurements along the injected beam taken at the input to the transport section are shown in Fig. 5a. The beam energy was calibrated using time of flight measurements along the MBE-4. The measured spread in the energy at a given time point (position along the beam) is given by the error bar, about 0.3%, is consistent with the system designed resolution. Figure 5b shows energy measurements taken along a drift compressed beam bunch at the diagnostics station 25. One can see the compressing energy difference along the beam, furthermore that the beam reached a maximum in the compression and the beginning of an expansion at the bunch center followed by a change in the energy difference (slop) sign.

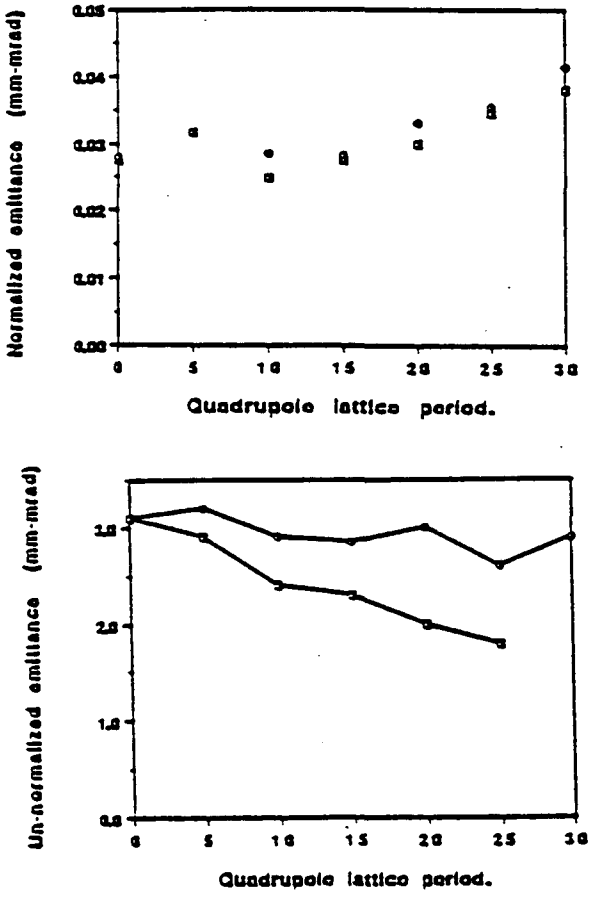

Fig. 5 Emittance measurements along the MBE-4:
(a) Evaluation of the measurements reproducibility.
(b) Normalized emittance conservation in an accelerated beam.

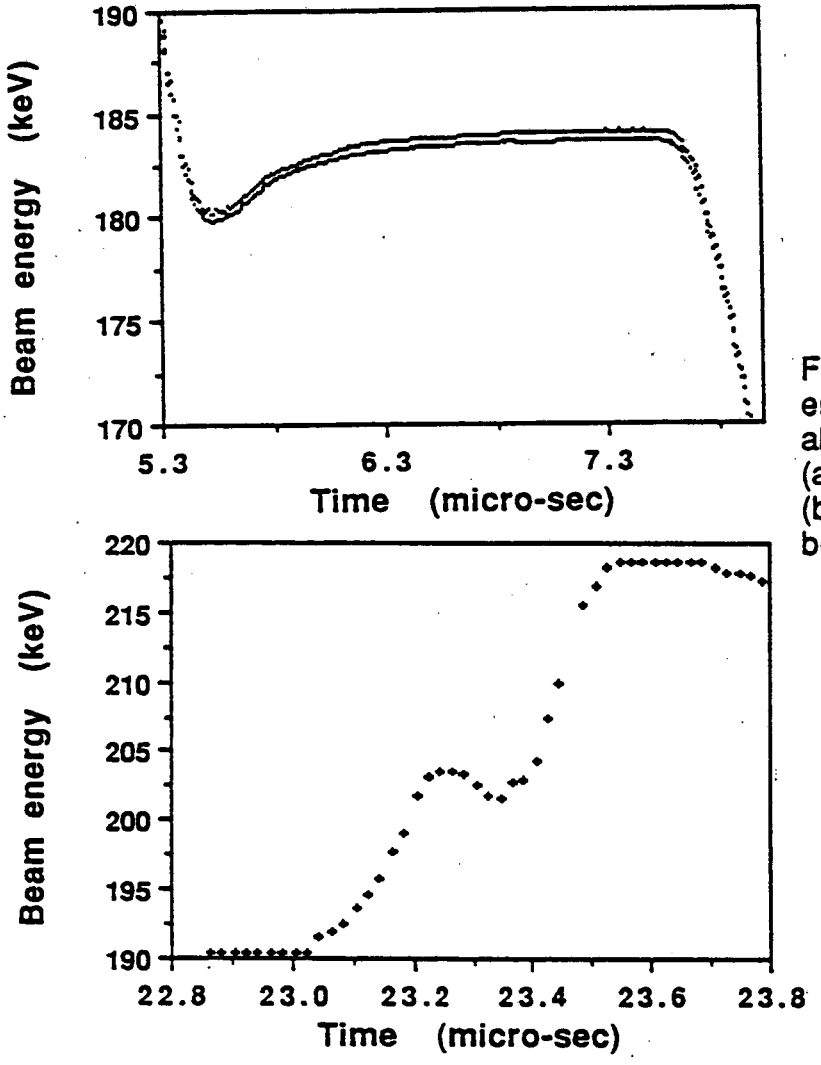

Fig. 6 Longitudinal energy measurement along the beam:
(a) Drifting beam.
(b) Drift compressed beam.

REFERENCES

1. D. Keefe, "Inertial Confinement Fusion," Ann. Rev. Nucl. Part. Sci., **32**, 391 (1982).
2. A. I. Warwick, et al., "Preliminary Report on MBE-4, An experimental Multiple-Beam Induction Linear Accelerator For Heavy Ions. L.B.L. Report 28529, November 1988.
3. T. J. Fessenden, "Emittance Variations in Current-Amplifying Ion Induction Linacs", to appear in the proceedings of the 1991 IEEE-APS Particle Accelerator Conference, May, 1991, San Francisco, CA.
4. M. Gross, "Diagnostic System Program Listings", L.B.L., HIFAR Note-280, Sep. 1990.
5. T. Garvey, et al., "Transverse Emittance Studies of An Induction Accelerator of Heavy Ions", to appear in the proceedings of the 1991 IEEE-APS Particle Accelerator Conference, May, 1991, San Francisco, CA.

LAWRENCE BERKELEY LABORATORY
UNIVERSITY OF CALIFORNIA
TECHNICAL INFORMATION DEPARTMENT
BERKELEY, CALIFORNIA 94720