LBL-31522
UC-414

Exploratory Studies 1991

For Reference

Not to be taken from this room

Accelerator and Fusion Research Division
Lawrence Berkeley Laboratory
University of California
Berkeley, California 94720

March 1992

LBL-31522
Copy 1
Bldg. 50 Library.

DISCLAIMER

This document was prepared as an account of work sponsored by the United States Government. Neither the United States Government nor any agency thereof, nor The Regents of the University of California, nor any of their employees, makes any warranty, express or implied, or assumes any legal liability or responsibility for the accuracy, completeness, or usefulness of any information, apparatus, product, or process disclosed, or represents that its use would not infringe privately owned rights. Reference herein to any specific commercial products process, or service by its trade name, trademark, manufacturer, or otherwise, does not necessarily constitute or imply its endorsement, recommendation, or favoring by the United States Government or any agency thereof, or The Regents of the University of California. The views and opinions of authors expressed herein do not necessarily state or reflect those of the United States Government or any agency thereof or The Regents of the University of California and shall not be used for advertising or product endorsement purposes.

Available to DOE and DOE Contractors
from the Office of Scientific and Technical Information
P.O. Box 62, Oak Ridge, TN 37831
Prices available from (615) 576-8401, FTS 626-8401

Available to the public from the
National Technical Information Service
U.S. Department of Commerce
5285 Port Royal Road, Springfield, VA 22161

Lawrence Berkeley Laboratory is an equal opportunity employer.

DISCLAIMER

This document was prepared as an account of work sponsored by the United States Government. While this document is believed to contain correct information, neither the United States Government nor any agency thereof, nor the Regents of the University of California, nor any of their employees, makes any warranty, express or implied, or assumes any legal responsibility for the accuracy, completeness, or usefulness of any information, apparatus, product, or process disclosed, or represents that its use would not infringe privately owned rights. Reference herein to any specific commercial product, process, or service by its trade name, trademark, manufacturer, or otherwise, does not necessarily constitute or imply its endorsement, recommendation, or favoring by the United States Government or any agency thereof, or the Regents of the University of California. The views and opinions of authors expressed herein do not necessarily state or reflect those of the United States Government or any agency thereof or the Regents of the University of California.

Exploratory Studies

1991

Accelerator and Fusion Research Division
Lawrence Berkeley Laboratory
University of California
Berkeley, California 94720

March 1992

Reprinted from *Accelerator and Fusion Research Division 1991 Summary of Activities*, LBL-31520, December 1991.

This work was supported principally by the U.S. Department of Energy under Contract No. DE-AC03-76SF00098. Support came from the Director, Office of Energy Research, through the Office of Basic Energy Sciences (Materials Sciences Division), the Office of High Energy and Nuclear Physics (High Energy Physics Division), and the Office of Superconducting Super Collider.

Contents

Foreword v

B-Factory Studies 5-2
Conceptual Design 5-2

Chemical Dynamics Research Laboratory 5-5
CDRL: A Unique Combination of User Facilities 5-6
IRFEL Design Progress 5-7

ALS Beam Physics Facility 5-10
Facility and Operations 5-10
Research Program 5-12

Accelerator Physics for the ALS 5-13
Beam Lifetime 5-13
Control System 5-14
Injector Commissioning Experience 5-14

Nonlinear Dynamics and Mathematical Physics 5-14
Code Development 5-15

Collider Physics 5-16
High-Gradient Accelerator Structure 5-16
Transversely Modulated RK 5-17
Standing-Wave FEL 5-17
Horizons for the TBA 5-17
Beam Conditioning 5-17

Beam Control Electronics 5-18
B-Factory Contributions 5-18
Fermilab Antiproton Cooling System 5-19

Publications and Presentations 5-20

Foreword

"Nothing happens unless first a dream."
—Carl Sandburg

The Exploratory Studies Group is dedicated to advanced investigation of accelerators and radiation, primarily in the area of charged-particle beams and photon beams. Its primary mission is to explore the next steps in the development of particle accelerators and storage rings, which are important both for high-energy physics and for the wide range of disciplines now turning to synchrotron-radiation sources and free-electron lasers. Our research is therefore deeply committed to LBL's institutional goal of becoming a center for the generation and use of coherent and incoherent electromagnetic radiation of exceptional brightness, as well as for generic research on the future development of accelerators.

A significant fraction of our effort is dedicated to general accelerator-physics research for facilities on the immediate horizon, but a vital part of our activities comprises research into exotic possibilities for charged-particle production, accumulation, acceleration, and storage. During this report period, we were proncipally involved in four general areas of study:

(a) Accelerator-physics research for the Advanced Light Source, the 1–2 GeV synchrotron radiation source now under construction at LBL.

(b) In collaboration with the Stanford Linear Accelerator Center, both the conceptual and the detailed design of PEP-II, an energy-asymmetric electron-positron collider, based on the PEP ring at SLAC and designed to serve as a B-meson factory.

(c) Studies of ultraviolet and infrared free-electron lasers based on linear accelerators and storage rings, in particular the conceptual design of an infrared free-electron laser for the proposed Chemical Dynamics Research Laboratory at LBL.

(d) Generic high-energy accelerator-physics and photon-beam research directed far into the future to envision facilities that would employ new techniques of particle-beam acceleration and storage and photon-beam generation.

In the context of category (d), we are carrying out a variety of studies. The subjects include next-generation TeV-scale linear colliders; facilities that would allow fundamental particle-physics research at lower energies (high-luminosity meson factories, for example); topics in beam-plasma physics; systems and components for high-brightness particle beams; fundamental limits on acceleration and beam luminosity; and techniques for generating and detecting femtosecond x-ray pulses. Theoretical studies in nonlinear dynamics and mathematical physics are a common thread through all these areas.

In addition, we are deeply committed to the education and training of physicists who will play a crucial role in accelerator-related sciences, and we continue our international involvement in accelerator research through collaborative and advisory interaction with other institutions and laboratories around the world. The following pages provide a flavor of our multifaceted activities during 1990 and 1991.

Swapan Chattopadhyay
Group Leader, Exploratory Studies
March 1992

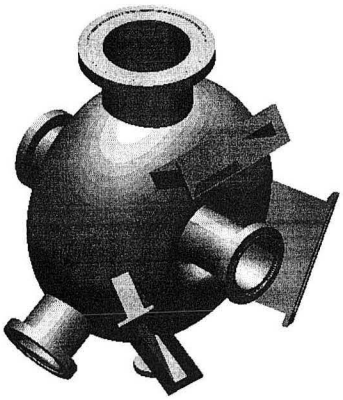

5.

EXPLORATORY STUDIES

THE TWO MAJOR ACCELERATOR-BASED INITIATIVES launched in 1989 with the support of the Exploratory Studies Group continued their progress. PEP-II, a proposed energy-asymmetric B-meson "factory" based on the PEP (Positron-Electron Project) ring at the Stanford Linear Accelerator Center (SLAC), has been the subject of ongoing research, design, and development and has stimulated great interest in the worldwide high-energy physics community. Meanwhile, our ongoing research into free-electron lasers and high-brightness electron and photon sources is coming to fruition in the proposed Chemical Dynamics Research Laboratory initiative, which features a high-performance infrared free-electron laser (IRFEL).

Other topics of special relevance to various research communities are important in our work. We continue to search for and explore techniques for generating ultrashort bursts of x-rays lasting tens to hundreds of femtoseconds. Members of our group have played major roles in the initial commissioning of the Advanced Light Source injection complex (see Chapter 3 of the *AFRD Summary of Activities*), and we are studying ideas for an experimental facility that would use the ALS linac during the considerable

S. Chattopadhyay *(group leader)*
K.-J. Kim *(deputy)*

ALS
J. Bengtsson
S. Chattopadhyay
E. Forest
A. Jackson
R. Keller
C. Kim
D. Massoletti
H. Nishimura
L. Schachinger
F. Selph†

High-Energy Physics (B factory and SSC)
S. Chattopadhyay
Y.H. Chin
E. Forest
M. Furman
A. Garren
S. Krishnagopal
G. Lambertson†
R. Rimmer
F. Voelker*†
M. Zisman

Collider Physics
A. Sessler
D. Hopkins
S. Krishnagopal
J. Leung
G. Rangarajan
D. Whittum

Free-Electron Lasers and Bright Electron and Photon Sources
S. Chattopadhyay
Y.H. Chin
R. Gough
C. Kim
K.-J. Kim
M. Xie

Beam Signal Electronics
G. Lambertson†
D. Goldberg
J. Johnson*
R. Rimmer
F. Voelker*†
J. Wise*

Visitors
W. Barletta (LLNL)
W. Joho (PSI, Switzerland)
J.S. Choi (PLS, South Korea)
J. Tennyson
J. Wurtele (MIT)
B. Yang (MIT)

Students
E. Bolda
J. Eden
R. Govil
K. LaMon
S. Lidia

LLNL Collider Physics Collaborators
S. Yu *(project leader)*
W. Barletta
T. Houck
R. Jong
M. Makowski
A. Paul
R. Ryne
W. Sharp
J. Stewart
G. Westenskow

Administrative Support
J. Kono *(group administrator)*
M. Condon
S. Morales
D. Moretti
Erica Orvis-Atkins
S. Saltzstein
J. Zelver

* Engineering Division
† Retired

spans of time between the ALS injection cycles. Work continues in accelerator theory and nonlinear dynamics. The Collider Physics section has continued its long-range Two-Beam Accelerator research. And the Beam Control Electronics section, in addition to contributing to and supervising the multilaboratory B-factory rf and feedback design efforts, worked on beam-cooling improvements for the Tevatron's antiproton source and is supporting the rf, impedance, and feedback aspects of the ALS.

B-Factory Studies

In recent years the high-energy physics community has become increasingly interested in "B factories," which would produce $B\bar{B}$ pairs for fundamental studies of charge-parity (CP) violation and rare B-meson decays. Several schemes for copious $B\bar{B}$ production in electron-positron collisions have been advanced in the literature. In collaboration with the Stanford Linear Accelerator Center (SLAC), Lawrence Livermore National Laboratory (LLNL), and the California Institute of Technology, we are designing a facility based on one of the most promising schemes: PEP-II, a collider with one high-energy ring and one low-energy ring, built in the PEP tunnel at SLAC and re-using many PEP components. Such a collider would be scientifically and economically attractive.

Conceptual Design

During 1990 and 1991 the collaboration continued refining the design of a B factory in which a 9-GeV electron beam in PEP collides with a 3.1-GeV positron beam circulating in a new storage ring. The new low-energy ring will be the same circumference as PEP and will be mounted above it in the existing tunnel, as shown in Figure 5-1. Using the same circumference permits equal numbers of bunches in the two rings, even if a gap in the bunch train is left in the high-energy ring to combat ion trapping. Moreover, a large low-energy ring provides a long luminosity lifetime (the relative loss in luminosity from beam-beam collisions scales inversely with ring circumference). The chosen energy combination reaches the Upsilon (4S) resonance, at which $B\bar{B}$ pairs are produced in the abundance required for the study of CP violation. The challenge in the design of a B factory is to reach an initial luminosity of 3×10^{33} cm^{-2} s^{-1}, more than an order of magnitude beyond the luminosities achieved to date in electron-positron colliders.

In principle, all of the relevant parameters—the ratio of the cross sections of the two beams, the beam current, the beam-beam tune shift, the beam energy, and the vertical beta function at the interaction point—are adjustable. In practice, however, the beam-beam tune shift cannot be increased beyond a certain value, which has been determined experimentally in many colliders to lie in the range of 0.02–0.06. Similarly, a collision energy at the Upsilon (4S) resonance implies that the product of the beam energies must be 28 GeV^2. Thus, only three parameters—the beam-size ratio, the beam current, and the vertical beta function at the interaction point—are fully at the disposal of the accelerator designer.

The chosen luminosity, 3×10^{33} cm^{-2} s^{-1}, has been shown to be adequate for beginning the study of the key physics issue, CP violation. However, if more-detailed measurements are subsequently desired, additional development work should permit the design to reach even higher luminosities. Given the limitations caused by the beam-beam interaction—which we take for our design to correspond to a maximum tune shift of 0.03—a great increase in luminosity implies that the high-current beam must be separated

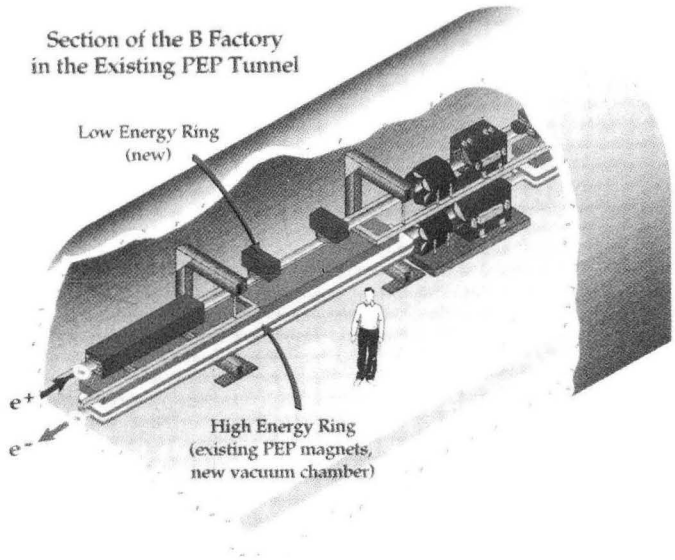

CBB 913-1911

Figure 5-1. The proposed asymmetric B factory, PEP-II, would be built in the Positron-Electron Project tunnel and would use a substantial amount of the existing hardware for the PEP collider. (Artist's impression courtesy SLAC)

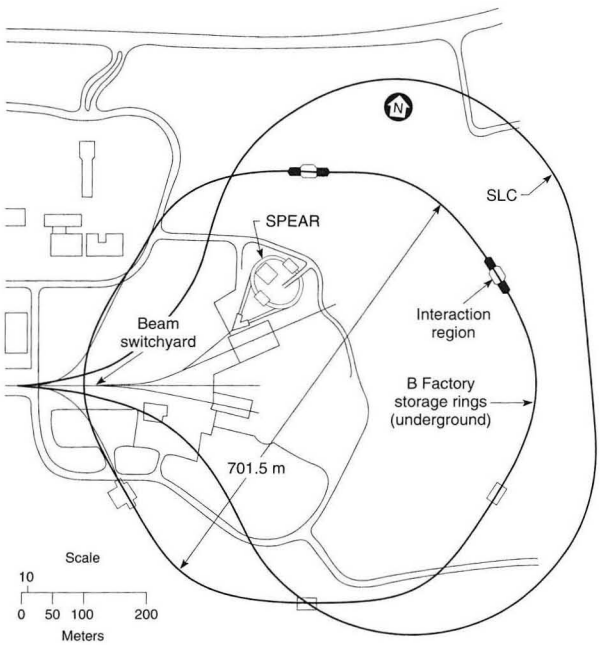

XBL 902-5762

into a large number of individual bunches (1658 in our design). This approach involves a design in which the single-bunch parameters (emittances, bunch lengths, currents, tune shifts, etc.) are well within present practice for colliders. Our choice does not exacerbate problems with coupled-bunch instabilities, yet avoids problems from single-bunch effects.

Since the beginning of the conceptual-design phase of the project, a number of design issues have been clarified, and most of the design choices have been made. Particular topics that have been investigated include:

- Heat load on the vacuum chamber wall from the synchrotron radiation, which can reach 10 kW/m at maximum beam current in the high-energy ring.
- Gas load from the synchrotron-radiation photodesorption in the high-energy ring.
- Damping of the higher-order-mode impedance of the rf system, which drives strong coupled-bunch instabilities.
- Separation of the closely spaced beam bunches near the interaction point while minimizing detector backgrounds.

For PEP to serve as the high-energy ring, several of its systems must be significantly upgraded to deal with the issues listed above. Foremost among these are the rf and vacuum systems. The rf system for the B factory will consist of 20 single-cell cavities, operating at a frequency of 476 MHz in order to phase-lock the storage ring rf system to that of the 2856-MHz injector (the "two-mile linac" also used to inject the Stanford Linear Collider). This choice of frequency minimizes injection phase errors, which contribute significantly to the power demands of the multibunch feedback system. The cavity design itself is aimed at minimizing the higher-order-mode impedance contribution of the rf system.

To handle the high synchrotron radiation power and to minimize photodesorption of gas, copper was chosen as the vacuum-chamber material. A number of experimental studies confirmed that a desorption coefficient of roughly 2×10^{-6} will be achievable for copper after proper pretreatment and conditioning with a beam. A copper chamber has the additional benefit of being self-shielding against the synchrotron radiation produced by the beam.

After a number of detailed studies, we have decided to utilize a conventional "flat-beam" configuration for the rings. This choice was dictated primarily by the desire to reduce the synchrotron radiation produced near the interaction point to a more-manageable level. With optics designed to focus a round beam at the interaction point, approximately 750 kW of synchrotron radiation would be produced in this region; the use of flat-beam optics reduces this by about an order of magnitude. Furthermore, using flat beams makes it possible to lower the vertical beta functions at the interaction point by a factor of 2 compared to the round-beam case, and thus to retain essentially a constant luminosity at a given beam current. (There is some

B Decays and CPT Symmetry

Judging particle interactions by the standards of the familiar, macroscopic world, one would think that if a process and the participating objects were replaced either by their antimatter equivalents or by versions of themselves as seen in a mirror, the rate of the process would remain the same. It seems equally intuitive that reversing a process would yield the original participants, much as though one were running a movie in reverse and watching the actors run backwards in their own footprints.

But on the scale of subatomic particles and the quarks that make them up—a scale where the "weak interaction" becomes the strongest of forces—the first two rules, called "conservation of parity" and "charge conjugation," are not necessarily obeyed. Not even CP symmetry, which combines both rules, necessarily holds true. The remaining variable is time; we are left with CPT symmetry—a scheme in which C, P, and CP symmetry violations can occur, but only if the arrow of time is allowed to take a different course when reversed, going back to a different beginning.

Thus far, CP violation has been observed through asymmetries in the decay modes of the neutral K meson and its antiparticle. The K^0 and $\overline{K}^0$ contain an unusual quark, the "strange" quark, which is not found in the group of quarks that make up ordinary matter. The K decays in a wide variety of fashions (it is axiomatic that every decay mode not explicitly forbidden must eventually occur). In a few of these modes, the K^0 decays a few tenths of a percent differently than the $\overline{K}^0$, a sign of CP violation. But studies of the K system have left a great many questions unanswered about the mechanisms and magnitude of CP violation.

The B meson, which contains a different unusual quark ("bottom" as opposed to "strange"), is predicted by the Standard Model of Particles and Interactions to have asymmetries as great as 30% in some rare decay modes. This makes it a very promising candidate for CP-violation studies. However, the branching fraction—the proportion of $B\overline{B}$ pairs that will not only decay through the unusual modes but also violate CP symmetry in doing so—is only about 10^{-4} to 10^{-5}. Therefore, about 10^7 to 10^8 $B\overline{B}$ pairs will have to be produced in order to get good CP-violation statistics. This requirement, implying the need for a great many e^+e^- collisions, brings us to the luminosity frontier of accelerator physics, whose technical challenges are described elsewhere in this chapter.

The ultimate goal of this research is to enhance the Standard Model—today's partial theory of the building blocks of nature and how they interact—or replace it with a new, more-satisfactory theory. In either case, CP violation will have to be better quantified, and its origins will have to be explained. The present Standard Model does not disallow CP violation but does not explain it either. These studies also have ramifications beyond particle physics.

In 1967, not long after the discovery of CP violation, Andrei Sakharov pointed out that it might explain one of the longstanding riddles of cosmology: why the universe was not born with equal, evenly distributed quantities of matter and antimatter that would annihilate each other whenever they interacted. For some reason, the laws of nature appear to prefer matter over antimatter—a phenomenon that makes possible the physical universe we see every day. Such will be the implications of the research at PEP-II.

suggestion from simulations that round beams may permit a greater beam-beam tune shift. However, it does not seem likely that such a tune-shift increase would permit a reduction in beam current sufficient to obtain a reasonable decrease in the synchrotron-radiation power near the IP.)

For the initial collider configuration, we intend to employ head-on collisions, using the S-bend geometry illustrated schematically in Figure 5-2. An alternative scheme, involving a non-zero collision angle along with tilted bunches ("crab crossing"), offers the potential advantage of reduced background at higher luminosities, but will require significant R&D effort to verify its performance. Although we do not think it prudent to adopt this scheme immediately, the possible benefits have convinced us to retain crab crossing as a possibility for a future upgrade.

At present, most of the problems have been addressed in a satisfactory manner and technical solutions are in hand. We are now involved in the detailed engineering design of the various components. A conceptual design report was submitted to the Department of Energy in February 1991 and was successfully reviewed that March.

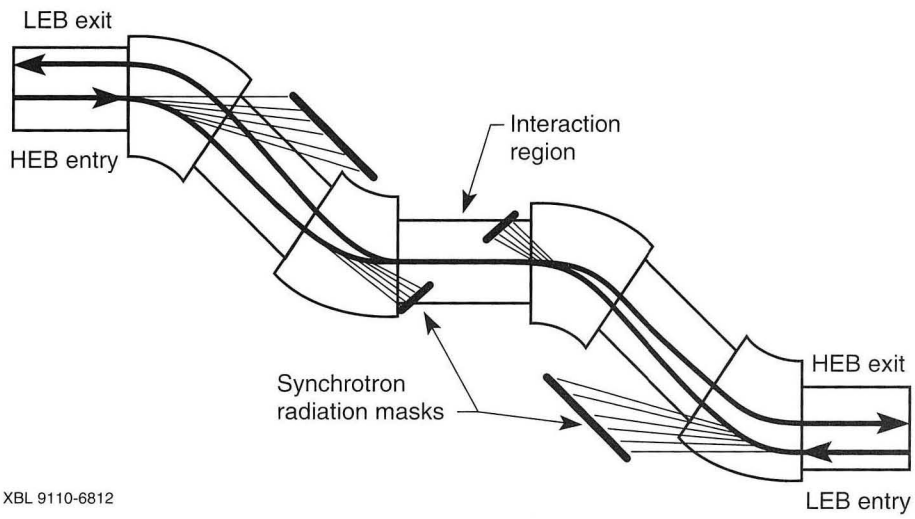

Figure 5-2. An S-bend design for a head-on collision configuration was chosen for the interaction region of the initial PEP-based B factory. This layout does not rule out a possible future upgrade in which flattened beams would cross "crabwise" at a finite angle.

Chemical Dynamics Research Laboratory

The Chemical Dynamics Research Laboratory (CDRL) is a key new facility in the multi-laboratory Combustion Dynamics Initiative (CDI). The CDI is being put forward by the DOE's Division of Chemical Sciences to provide a foundation in chemistry and combustion science and technology for enhancing energy and environmental efficiency, securing future energy supplies, and enhancing environmental quality—all key parts of the National Energy Strategy. The focus of the CDI is on cleaner, more efficient combustion of fossil fuels. They account for more than 90 percent of U.S. energy consumption, a situation that will continue well into the next century. Even an increase in combustion efficiency or pollution reduction of a few percent would have tremendous payback. Such improvements might be achieved by starting with a systematic understanding of the fundamental chemistry of combustion and related industrial processes.

The research proposed for the CDRL (sidebar) is aimed at gaining a rigorous, molecular-level understanding of the chemistry of the combustion process. This understanding will lead to enhanced combustion efficiency and reduced production of pollutants. Success in these areas is of critical importance to the nation's environmental quality and economic competitiveness.

The CDRL is proposed for LBL with significant participation by Sandia National Laboratories (SNL). Because of the complementary research capabilities of the two laboratories, this partnership will enable progress that would be beyond the reach of either laboratory acting alone. SNL researchers will be responsible for the construction and operation of some of the experimental equipment, and will play a key role in the scientific program and the transfer of combustion technology to industry.

CDRL: A Unique Combination of User Facilities

Research in combustion and reaction dynamics is generally dependent upon advanced technologies and techniques. At LBL, a national user facility called the CDRL will bring the key technologies together for the first time. At its heart is the infrared free-electron laser (IRFEL), which has been the subject of a great deal of work by our group. The IRFEL, together with two ALS beamlines, various optical lasers, and state-of-the-art molecular-beam machines, will enable research that will have a great impact on our understanding of chemical dynamics and combustion chemistry.

The IRFEL will be installed in a new building adjacent to the ALS (Figure 5-3) so that photon beams from both facilities can be delivered to the experimental stations. The ALS beamlines have been another area of study and development by our group, in collaboration with the ALS staff and the Center for X-Ray Optics. Advanced optical lasers are being designed by

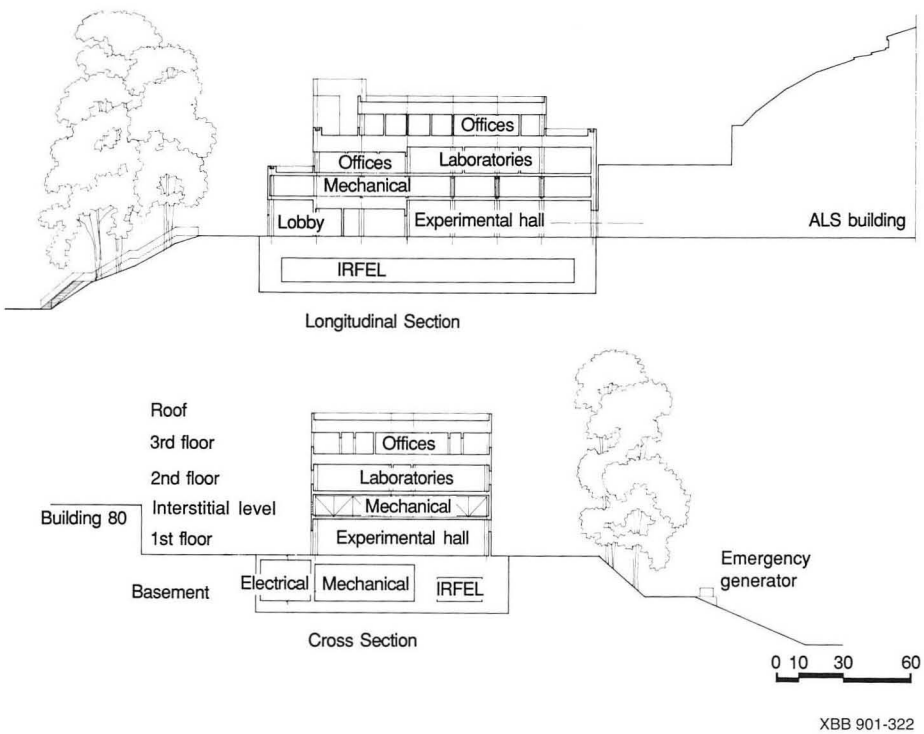

Figure 5-3. The four-story CDRL building will be located adjacent to the ALS so that the IRFEL and conventional-laser beams can be brought together with UV and soft-x-ray beams from the ALS. The CDRL main experimental hall, on the first floor, will be served by one bending-magnet beamline and one insertion-device beamline from the ALS. The upper stories will provide office space for CDRL users; the large IRFEL will be built in a radiation-shielded vault in the basement.

colleagues from both the University of California at Berkeley Chemistry Department and Sandia National Laboratories. These collaborators have been deeply involved in the design of experimental facilities and in the development of the research program.

IRFEL Design Progress

A conceptual design of a room-temperature IRFEL was completed in February 1990. The FEL can operate in synchronization with the ALS and produce intense (up to 100 μJ per micropulse), narrow-band (< 0.1 %) radiation with wavelengths tunable in the 3–50 μm range. The design, shown in Figure 5-4, uses two sections of standing-wave L-band linac to accelerate electrons up to 50 MeV. The sequence of a thermionic gun, two low-frequency bunchers, and an L-band buncher establishes a micropulse width that can be varied in the 10–20 ps range. The system operates in a pulsed mode, with a macropulse duration of 100 μsec, repeating at a rate of 60 Hz. Infrared radiation is produced with a variable-gap undulator and an 8.2-m-long optical cavity with a broadly tunable outcoupling scheme.

Particular attention was paid to stability and tunability, which are crucial for the users' needs. A detailed analysis of the response of the electron beam fluctuation on the FEL characteristics was carried out through analytic calculation and numerical simulation. Also studied were various sources of fluctuations in the gun, bunchers, and accelerating sections, as well as feedback and feedforward schemes to reduce these fluctuations. Our studies show that the FEL spectrum can be stabilized to about 0.1% using this approach.

A standing-wave structure was chosen for the linac because of the need for electron-beam stability. Spectral stability could be further improved to about 0.01% by introducing a grating into the optical cavity, but at the price of reduced tunability. Various schemes to couple out the optical beam over the entire wavelength range were evaluated. Hole coupling with metallic optical components appears to be the most promising of these approaches in terms of power handling and bandwidth capability. With a new computer

Figure 5-4. The room-temperature IRFEL design uses 1300-MHz side-coupled standing-wave linacs. Two sections of standing-wave L-band linac accelerate electrons up to 50 MeV. The sequence of a thermionic gun, two low-frequency bunchers, and an L-band buncher establishes a micropulse width that can be varied in the 10–20 ps range. The system operates in a pulsed mode, with a macropulse duration of 100 μs, repeating at a rate of 60 Hz. Coherent infrared radiation is produced with a variable-gap undulator and an 8.2-m-long optical cavity with a broadly tunable outcoupling scheme.

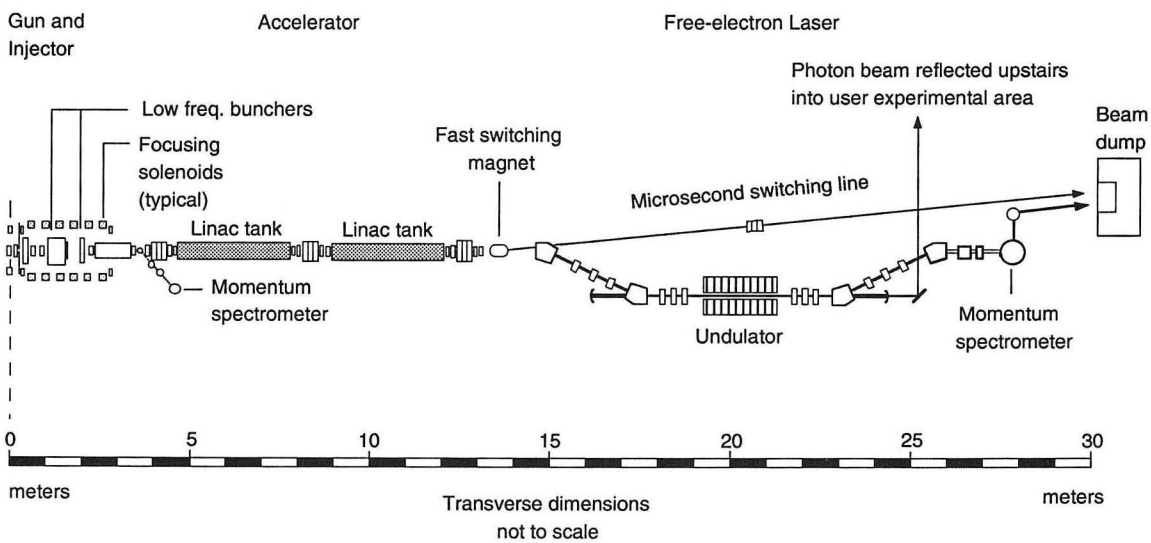

XBL 917-6773a

code, the performance of the hole-coupling resonator was analyzed.

An alternate technical approach has been explored that takes advantage of recent developments in the technology of superconducting rf linacs. An FEL based on superconducting accelerating cavities could be operated in the continuous-wave (cw) mode instead of in a pulsed mode, providing an opportunity to reduce the wavelength fluctuations to 0.01% and to operate with significantly increased average output power.

A preliminary design has been developed using 500-MHz rf cavities operating at 4 K, as shown in Figure 5-5. The gun and low-frequency bunchers are similar to those in the room-temperature design, but the three L-band accelerating structures are replaced with superconducting structures. The accelerating gradient is 5 MV/m, so a single pass will accelerate the beam to ~30 MeV, corresponding to an infrared wavelength of 10 μm. A recirculation loop (*sidebar*) could be used to further accelerate the beam to 50 MeV, needed to reach 3 μm. Such a structure could be operated with a continuous-wave (cw) electron beam rather than a pulsed beam, which

Research Prospects

The CDRL, with its IRFEL and advanced lasers, will complement the ALS, which upon completion will be the world's brightest source of soft x-rays for basic and applied research. Collaborative CDRL researchers from industry, universities, and national laboratories will use the unique features of ALS x-ray beams—high spectral brightness and very short pulse length (nominally tens of picoseconds). Undulators in the storage ring will provide somewhat spatially coherent radiation—sometimes referred to as "laserlike"—that is broadly tunable across the soft-x-ray to ultraviolet regions of the electromagnetic spectrum.

The CDRL experimental systems will be used by collaborative researchers for dynamic, spectroscopic, and structural studies of highly reactive molecules. Many of these are created during the early stages of combustion. These studies will take place in an experimental hall where light from the IRFEL, the ALS, and advanced conventional lasers (Figure 5-6) can be directed into experiment stations to study the dynamics of fast-moving chemical processes in detail. Such fundamental knowledge—which is beyond the reach of existing experimental facilities—is crucial for improving the efficiency of combustion and controlling the formation of pollutants.

Other LBL divisions, the University of California at Berkeley, and Sandia National Laboratory-Livermore are prominent among the organizations whose scientists are developing the CDRL research program. Research results will feed directly into U.S. industries concerned with cleaner combustion, alternative fuel supplies, reduced pollution, and improved industrial processes. Many regions of the nation face significant economic curtailment during the coming decades if air pollution from mobile and stationary sources is not controlled more effectively. The CDRL can provide a foundation of fundamental understanding that will enable long-term success in solving these problems.

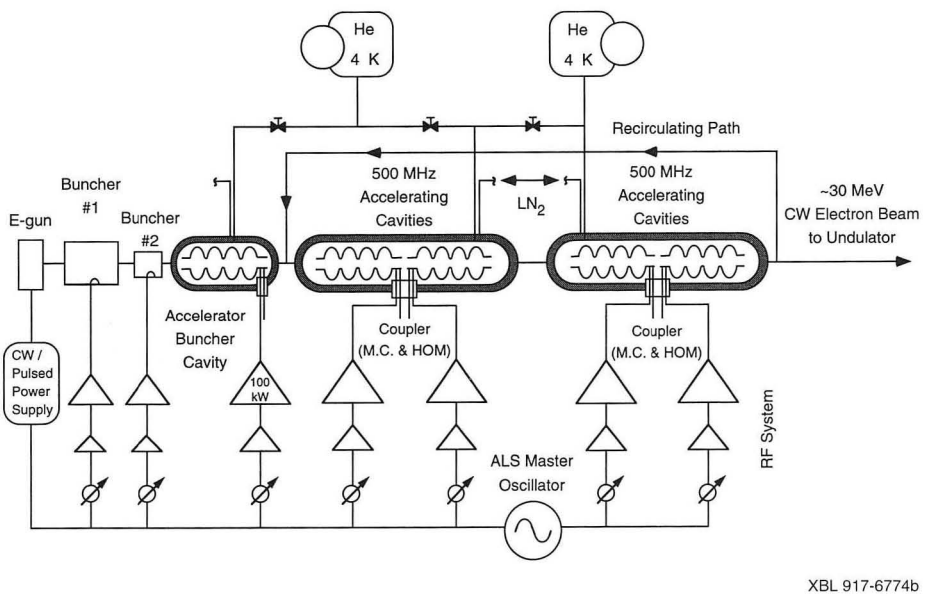

Figure 5-5. This IRFEL, based on 500-MHz niobium-titanium superconducting linacs, is being studied. A superconducting linac would allow continuous rather than pulsed beams and would lend itself to various recirculator options.

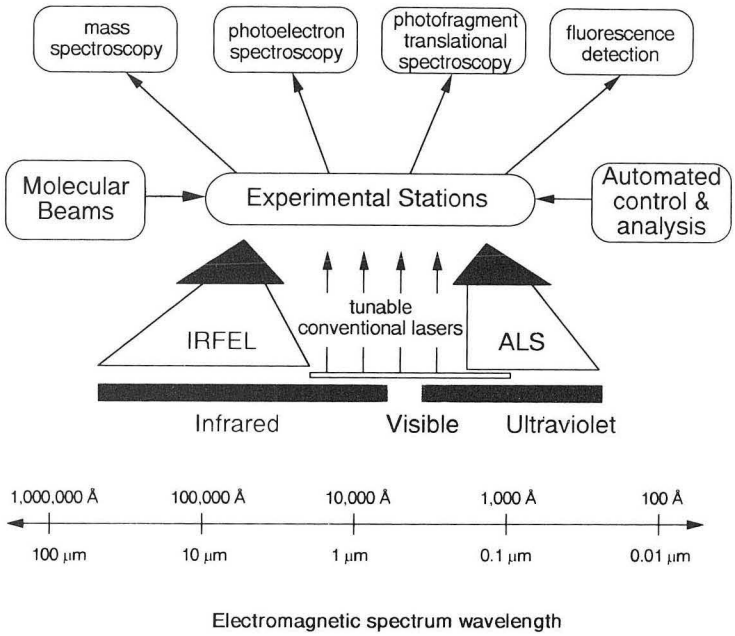

Figure 5-6. A key to the scientific potential of the CDRL is the unprecedented integration of several technologies over a wide spectral range. Tunability, synchronization capabilities, and time resolution on the order of picoseconds are among the other important features of the proposed facilities.

An Advanced IRFEL Option

We have speculated extensively on future possibilities that could be implemented either in a CDRL upgrade or in some other facility. One of them is a recirculating, superconducting accelerator.

In the present design, as in nearly all linacs, the electron beam makes a single pass through the accelerating cavities. But a number of laboratories have been examining superconducting, recirculating linacs. (The concept is, in fact, at the heart of the Continuous Electron Beam Accelerator Facility, which is being built in Newport News, Virginia.) Although complicated and not without technical risk, recirculating linacs offer great promise for achieving high beam energies and intensities in relatively short accelerators.

With an extra, in-phase pass through the accelerating cavities, the beam could reach an energy of 50 MeV, greatly extending the short-wavelength capability of the IRFEL. In another operational mode, the recirculated beam could instead be introduced into the cavities 180° out of phase with the rf. This would decelerate the beam, putting its power back into the rf cavities in a sort of flywheel effect for use on the next pulse. The electron beam, and hence the optical beam, would be quite powerful.

Our work on the recirculation scheme is only beginning to address such important issues as isochronous beam transport and safe dumping of energetic, intense beams. Nor has it examined in detail the physical logistics of building the system (with, possibly, a longer lasing cavity) in the CDRL shielding vault. However, these speculative, long-range studies point the way to the future of the CDRL and help us avoid inadvertently making decisions (such as the placement of thick concrete shielding walls) that would lock out future options.

implies a time-averaged optical power in excess of 600 W. We continue to study the technological and scientific implications of operation at this high power. Table 5-1 compares this option with the room-temperature design. Note especially the tremendous increase in average optical power, achieved without sacrificing beam quality.

Table 5-1. Proposed IRFEL Characteristics

	Room Temp	Superconducting
Accelerator		
Type	SW side-coupled	SCA
RF frequency (MHz)	1300	500
Maximum energy (MeV)	56	~ 50
General properties		
Wavelength λ (μm)	3–50	3–50
Linewidth	transform-limited	transform-limited
Bandwidth stability $\delta\lambda/\lambda$	10^{-3}	10^{-4}
Intensity stability $\delta I/I$	0.1	≤ 0.1
Average power (W)	≤ 20	≤ 600
Micropulse		
Energy (μJ)	100 at 50 MeV	50–100 at 50 MeV
Duration (ps)	10–25	≈ 30
Repetition rate (MHz)	36.6	6.1–12.3
Macropulse		
Energy (J)	0.36	
Duration (ms)	0.1	> 10
Repetition rate (Hz)	60	flexible to cw

ALS Beam Physics Facility

In the ALS, the site of photon-beam generation is an electron storage ring with a predicted useful beam lifetime of several hours. The injection linac will be idle for several-hour stretches between injection cycles. A variety of interesting experiments, including plasma focusing, tests of accelerator structures, and generation of "chirped" photon pulses, could be conducted with that high-quality 50-MeV electron beam. We have proposed an initiative that would use the linac's "dead time" for a highly productive and cost-effective program in beam physics with minimal disruption to ALS operations. Currently, both the facility itself and the possible research program are being examined in more detail in the wake of encouraging comments from LBL's 1991 DOE High Energy Physics Review.

Facility and Operations

Figure 5-7 shows the proposed facility. Most of the focusing magnets for the beamline, which takes a 180° bend into the new cave, appear to be already on hand, left over from decommissioned caves at the SuperHILAC.* An effort is underway to evaluate the supply of salvaged magnets for appropriateness.

We anticipate that most experiments would be entirely transparent to ALS operations, involving no changes in the electron-gun and linac settings. Some special experiments might call for temporarily changing the relative

* A heavy-ion linear accelerator at LBL that formerly supported its own experimental program in nuclear chemistry but is now used only as an injector for the Bevatron. For more information see Chapter 7, "Bevalac Operations," of the *AFRD Summary of Activities*.

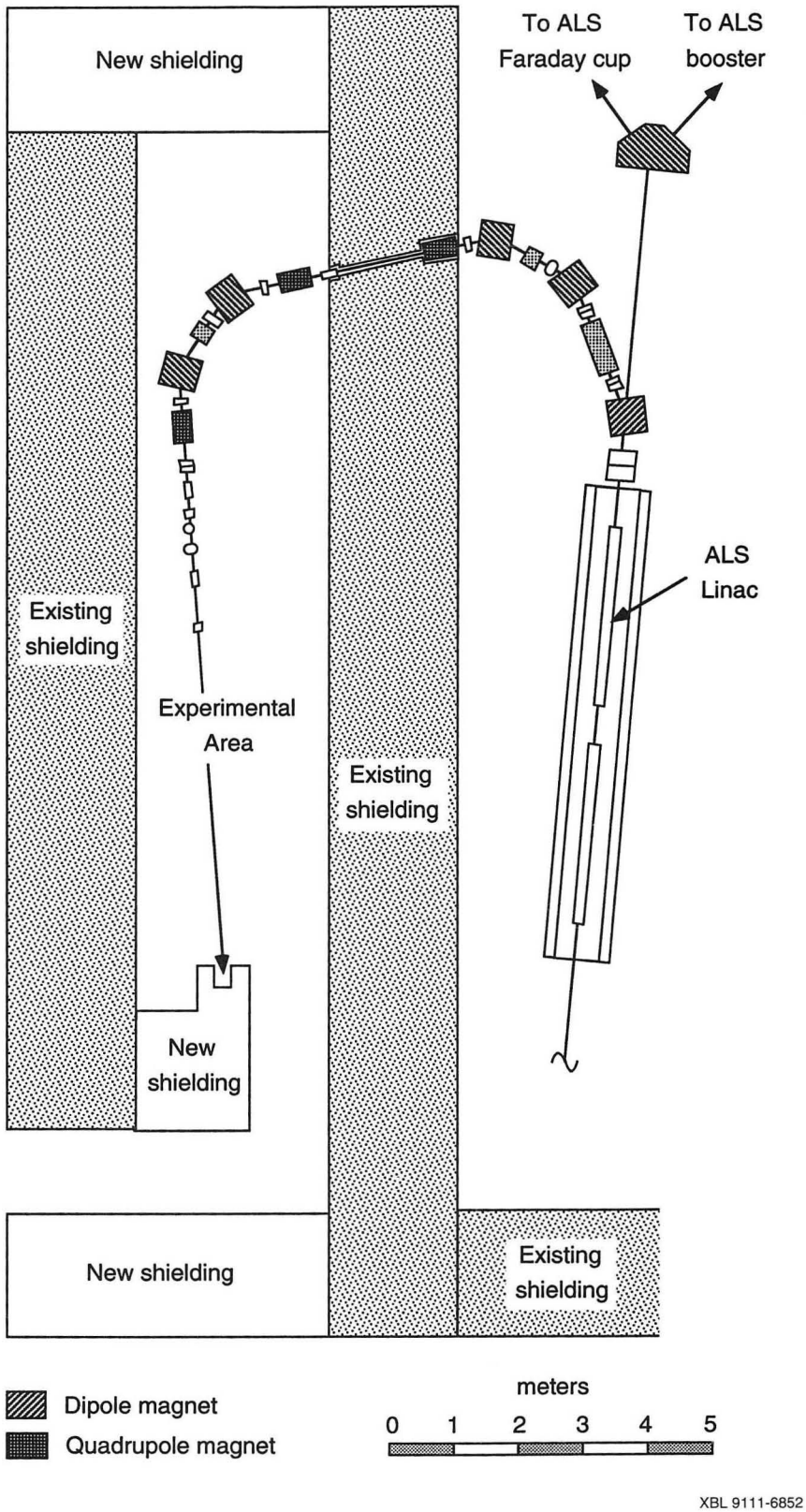

Figure 5-7. Because the ALS is based on a storage ring, the injector linac will be idle much of the time. This affords a highly cost-effective opportunity to develop a facility for beam-physics research.

amplitude and phase settings of the two linac tanks; others might require the gun pulser and the grid voltage to be turned up to their maximum capacity in terms of charge extraction and pulse-train length. The linac would remain under the overall control of the ALS throughout.

Research Program

Many interesting experiments could be performed with this conveniently available, short-pulsed, low-emittance electron beam. These four candidates appear especially attractive.

Beam-Structure Interaction Studies. Several kinds of special-purpose structures interrupt the smooth beampipe of an accelerator, including rf cavities, pickups and monitoring devices, and beam-manipulation devices such as kickers. These structures interact with the electron beam electromagnetically, limiting the maximum current which can be stored. Usually, electromagnetic characterization of such devices can be performed only through indirect strategies such as launching microwaves down the device or running rf along a wire stretched through it. The new facility would make it easy to measure a test object's response to an actual electron beam.

FEL Beam-Conditioning Cavities. The gain of a free-electron laser is limited by the energy spread and emittance, in three dimensions, of an electron beam. In principle, special rf cavities could be built that would couple these parameters, allowing one to respond to changes in the other and preserving the best possible combination. The facility would allow us to examine various candidates for beam-conditioning cavities and determine whether the idea can be realized in practice. (See "Beam Conditioning" in the Collider Physics section of this chapter.)

Chirped Radiation. Today, the shortness of synchrotron photon pulses is limited by, and comparable with, the shortness of electron pulses. An idea has evolved in our group for chirping* conveniently long (10-ps) electron-beam bunches to produce photon pulses that are much shorter. To chirp the electron bunch, that is, to give it a systematic energy tilt in phase space of 5–10%, we would "slide" it along the rf waveform of the linac by differentially phasing the two sections of the linac. Then photons would be produced, either magnetically in an undulator or through Compton scattering against a powerful laser beam. Since the head and tail of the bunch would have different energies, they would radiate at different wavelengths. A spectroscopic grating could then be used to select only one narrow slice from this band of wavelengths. Because the photons would come from a pulse rather than a continuous beam, a narrow slice of wavelengths would also mean a narrow slice of time. Applications include the many potential uses of sub-picosecond x-ray bursts, as well as, possibly, diagnostics for linear electron colliders.

Plasma Focus. When a relativistic electron beam passes through a plasma, electromagnetic interactions focus the beam. To date, most work with the plasma-focus concept has involved thin "lenses." Continuous plasma focusing holds the promise of overcoming the so-called Oide limit—a fundamental limit of focusability arising from statistical emission of high-energy photons in a sharp focusing bend. Our plans for the proposed facility include a proof-of-principle test of an idea from our group's Collider Physics section. The idea is a long, continuous plasma focus in which diaphragms

* A term for a small, rapid change in energy during a pulse, historically based in radio transmission of Morse code.

and differential pumping combine to taper the plasma density. The density would be tapered from about 1×10^{10} to 5×10^{12} cm^{-3} over a length of 0.5 m. We hypothesize that, at 5 MeV, such a device could focus a beam with a 3-mm cross section into a 400-μm spot.

Accelerator Physics for the ALS

Members of the Exploratory Studies Group have been involved in the Advanced Light Source from the outset, focusing primarily on the immediate needs of the project but also investigating many basic physics issues involving high-brightness electron storage rings with numerous insertion devices. Much of this research is highly generic and is relevant, for the most part, to any third-generation source, as well as to storage-ring-based free-electron lasers and to compact damping rings envisioned for high-energy linear colliders.

Beam Lifetime

One of the significant achievement of the ALS-support effort came out of a detailed study of beam lifetime in the ALS ring. This study, which included computer simulations, revealed that one particular loss process—a version of Touschek scattering—will be especially important among the factors that limit beam lifetime. In this process, the interaction of various resonances was seen to reduce the dynamic aperture* of the ring for off-momentum particles when synchrotron oscillations were taken into account. As shown in Figure 5-8, this will make the beam lifetime slightly lower than expected. We expect that small adjustments of the overall tune of the storage ring might partially compensate for this effect; we are now exploring this possibility in greater depth.

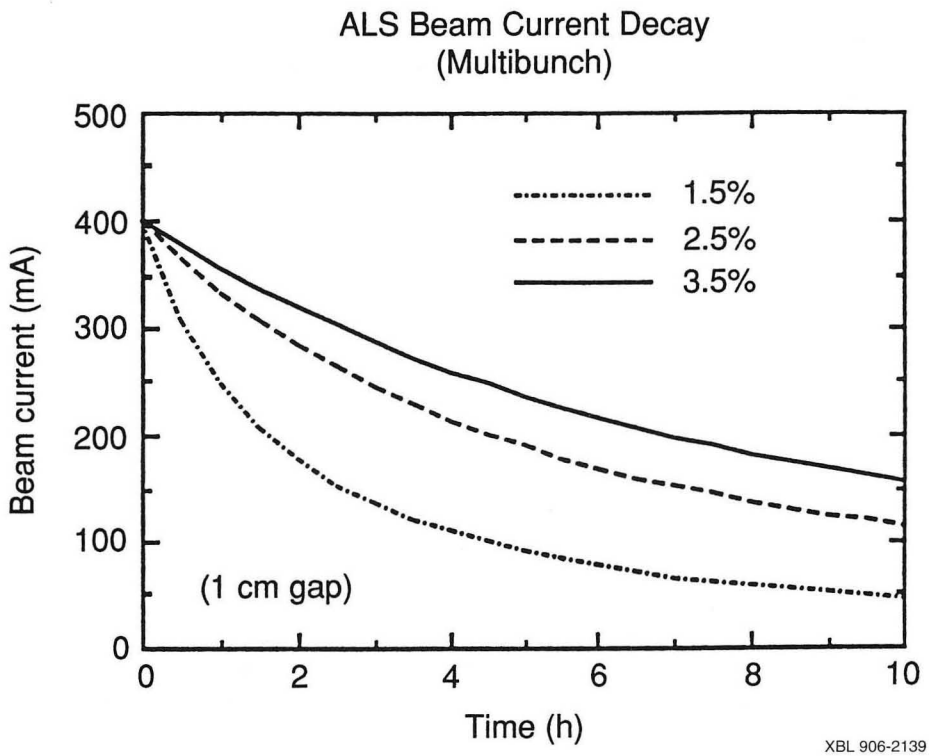

Figure 5-8. A combination of several resonance effects limits the dynamic aperture of the ALS storage ring for off-momentum particles. This reduces the beam lifetime, as shown in this plot of beam current vs. time for various degradations (1.5%, 2.5%, and 3.5%) of the energy aperture of the storage ring. The plot assumes a 1-cm (worst-case) gap at the insertion devices and realistic errors in magnetic fields.

* The dynamic aperture is the area within which the particles exhibit stable betatron and synchrotron oscillations; the beam can be contained magnetically within it. Particles that go beyond the dynamic aperture are lost due to various nonlinear, dynamic processes.

Control System

We modeled the behavior of the ALS to first order, and the information was applied by the ALS project in the development of the control system, which is now being implemented and used for commissioning. Figure 5-9 shows the usage scenario for the latest version of our accelerator analysis and simulation code TRACY2. The code provides an efficient, integrated environment in which physicists can develop model-based control algorithms.

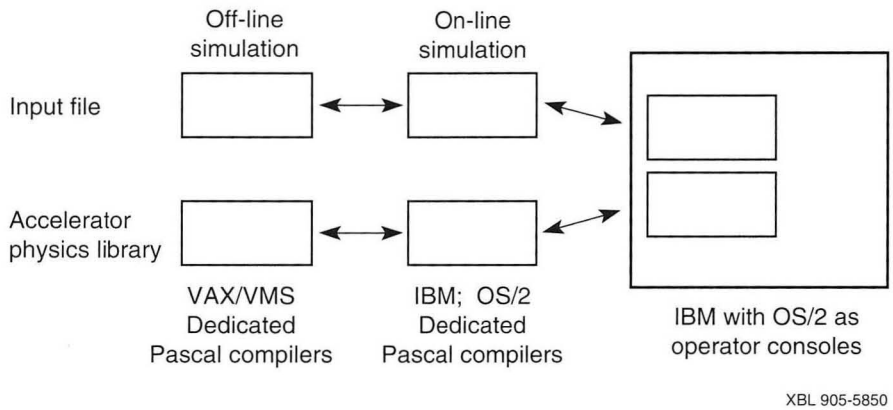

Figure 5-9. The accelerator analysis and simulation code TRACY2 can be used as an integrated environment for developing model-based control algorithms. Off-line activities can be performed under the VMS operating system on a VAX computer or under OS/2 on an IBM desktop computer. Then, given a control system using IBM computers like that of the ALS, testing with actual accelerator hardware can be performed.

Injector Commissioning Experience

Members of our group working on the ALS project have been closely involved in the commissioning of the 50-MeV injection linac and the 1.5-GeV booster synchrotron. Linac commissioning is well under way; the present efforts are directed toward maximizing the intensity and the phase and energy stability of the beam. The beam supplied by the linac has been circulated for many thousands of turns in the booster without acceleration. Soon we will begin commissioning the booster with rf, learning how to ramp up the magnetic fields and the rf power to accelerate the beam instead of merely storing it at the injection energy.

Nonlinear Dynamics and Mathematical Physics

In 1990 and 1991, we continued our theoretical investigation of nonlinear dynamics, exploring the outer limits of perturbation theory as applied to nonlinear dynamical maps. In particular, we have showed how to obtain invariants beyond "islands" by renormalizing the tune in phase space. The method is similar in its general spirit and goals to work by R. Warnock (SLAC), and to some extent, the work of F. Willeke (DESY) and F. Schmidt (CERN). We collaborated with J. Irwin (SLAC) to complete the nonlinear map picture by providing a prescription to analyze any map dominated by a single resonance. The method uses a rather unconventional "co-moving" map technique. The technique, which involves fitted maps on an action-angle grid, has been successfully combined with canonical transformations written with specially created Lie polynomials. Two versions of the symplectic Lie factorization have been implemented for use in symplectic tracking, with applications to the SSC. In addition, these codes provide tools for producing exactly symplectic and invertible canonical transformations.

Code Development

We performed a first-order linear calculation of equilibrium emittances of an electron beam in a storage ring in the GEMINI and FUTAGO nonlinear dynamics codes, which we had developed previously. The method relies heavily on the modern differential-algebraic approach and is fully three-dimensional plus one-half.* These tracking codes can be used separately or together, as shown in Figure 5-10.

With applications to compact storage rings and fringe-field-dominated transport lines in mind, we developed a new beam dynamics code, COSY INFINITY, based on an updated and enhanced differential-algebra package. Unlike previous codes, COSY INFINITY can compute maps of any order and account for arbitrary electromagnetic fields; in particular, fringing-field effects can be determined and the true Hamiltonian can be used.

Most of the existing tracking codes have been written for modeling of large accelerators that have separated-function bend magnets. These codes use particle-dynamics approximations that render them inappropriate for tracking in compact storage rings such as the SXLS at Brookhaven National Laboratory. These compact rings are becoming increasingly important, largely because of the widespread scientific and industrial interest in synchrotron radiation. To better accommodate compact storage rings and fringe-field-dominated transport lines, we have developed new tools for studying the dynamics of these systems. This effort has resulted in a new tracking code called KRACKPOT.

Essentially a "kick" code based on the symplectic-integrator concept of Forest and Ruth rather than on maps, KRACKPOT includes a tracker linked to the differential-algebra package. KRACKPOT can generate arbitrary-order Taylor series or Lie polynomial maps from which information such as tunes, chromaticity, and geometric tune shifts with betatron amplitude can be extracted. One of KRACKPOT's primary advantages over existing codes is the way it properly addresses isomagnetic combined-function bend magnets that have nonlinearities of arbitrary order. The code is being upgraded to include the effects of nonisomagnetic fringe fields.

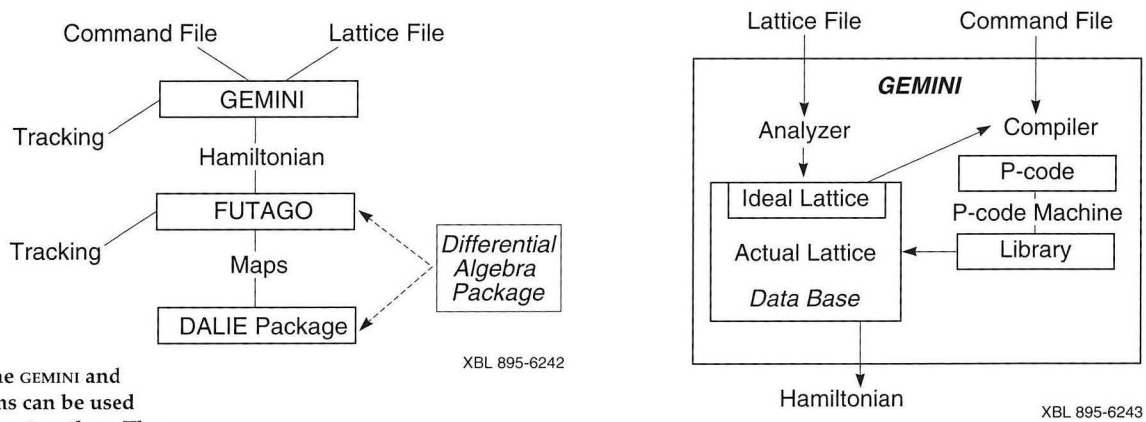

Figure 5-10. The GEMINI and FUTAGO programs can be used independently or together. The diagram at left shows their relationship; the diagram at right illustrates the interworkings of the various components of GEMINI.

* In this context, it is common to speak in terms of the x, y, and z spatial dimensions, plus momentum in each of those directions.

Collider Physics

Of the many ideas that have been proposed for the electron-positron colliders of the next century, the two-beam accelerator, or TBA, appears to be one of the more promising. Conceived at LBL, it is now being investigated, in several configurations, for research programs at many of the world's accelerator laboratories.

The TBA leaps a hurdle in the development of linear accelerators: the difficulty of efficiently producing extremely high-power microwave energy. Figure 5-11 illustrates the concept. The first of the two beams is a "drive" beam, generated by an induction linac, that has high current but relatively low energy (perhaps 3 kA, 10 MeV in a full-scale TBA). This beam is passed through either an undulator-based free-electron laser (FEL) or a relativistic klystron (RK), generating microwave power on the order of 1 GW per meter of length. The power is applied to an adjacent high-gradient acceleration structure, which accelerates a second electron beam to high energy.

Today, the TBA technology is in the early stages of development. Designs are being developed and evaluated by LBL researchers while in collaboration with colleagues from LLNL and SLAC, the basic components of a TBA are being developed and tested. We have continued work on the relativistic klystron (RK) as a power source for the TBA and on high-gradient linac structures.

High-Gradient Accelerator Structure

The latest of several high-gradient acceleration structures is the 10-cm-long, 34-cavity unit that was fabricated to LBL specifications by the Haimson Research Corporation. We are preparing to test it at the Massachusetts Institute of Technology, using as the power source an FEL that has already produced 50 MW. These tests will probe the breakdown threshold of the high-gradient acceleration structure at 33.31 GHz and at power levels of 20–50 MW. Acceleration gradients of 200–300 MeV/m are expected.

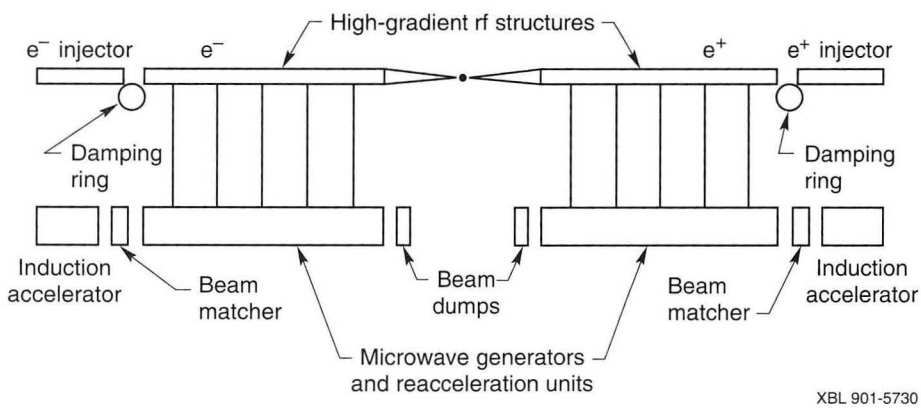

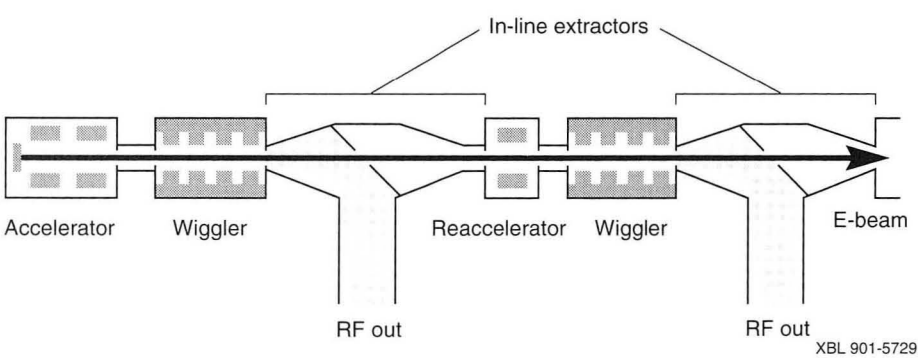

Figure 5-11. As shown in the TBA sketch *above*, a high-current, low-energy drive beam is used for generating rf power that is applied to a high-gradient acceleration structure, where a low-current load beam is accelerated to high energy. The diagram at *left* shows the progress of the drive beam through the rf generating devices (FEL wigglers in this example) and the reacceleration units that replenish the drive beam in between.

Transversely Modulated RK

All of the TBA/RK work performed thus far has used longitudinal bunching of the drive beam. This is adequate for low energies, but at moderate energies (greater than 3 MeV or so) it becomes less effective. To extend our work to higher energies, we experimented with a transverse chopper cavity or "choppertron," also built according to our designs by Haimson Research. We demonstrated in 1991 that the choppertron works—the peak power was hundreds of megawatts—but the pulses were short. We determined that the problem is a beam break-up mode generated in the output structure. The solution apparently lies in lengthening the beam pulse and thus reducing the peak current; we plan to accomplish this with a new rf extraction structure, which has been fabricated and will be tested in 1992.

Standing-Wave FEL

Although in recent years we have focused primarily upon the RK as a source of rf power, the FEL, explored in our original TBA research, remains a proven candidate with great potential. We are developing a new idea, called the "standing-wave FEL," in which the radiation is trapped in a standing-wave rf cavity and beat-coupled to a nearby high-gradient acceleration structure.

Horizons for the TBA

The work done on the TBA since we first conceived of it 10 years ago has validated the basic concept and the use of either an RK or an FEL as the source of rf power. However, there remains a vast amount of research and development before the concept can be put to use in high-energy physics. Here are some of the planned near-term investigations.

- Re-acceleration of the "spent" drive beam (useful for economic reasons) will be examined in a planned experiment at LLNL; preliminary work was done in 1990.
- There is much theoretical and experimental work to be done in extraction of microwaves from the power source. A demonstration of repeated extraction is being studied at LLNL. A Department of Energy Small Business Incentive Research contract is enabling DULY Associates to participate in the theoretical study.
- Sensitivity studies to determine the importance of various parameters will be important. A great deal of theoretical work has been done; coming years will see more studies on real apparatus.
- Economic issues will be significant in the eventual decision on whether to build a full-scale TBA and also in the technological choices within such a project. LLNL, with DOE support, is working on these issues.

Additionally, a collaboration with the Japanese high-energy physics laboratory KEK is under way, using an FEL from which up to 30 MW of rf power has been extracted at 8.6 GHz.

Beam Conditioning

The gain of a free-electron laser or other resonant electron-beam device is limited by the energy spread and emittance of a three-dimensional beam. The electron-beam emittance must be less than the wavelength of the radiation from the device, reduced by 2π. In principle, special cavities could be built that would use the TM_{210} mode to couple the energy spread and the emittance, allowing one to respond to changes in the other and preserving the best possible combination. We have analyzed this idea with a simple numerical model for beam transport, assuming ideal rf cavities. We have also analyzed an FEL to evaluate its performance with reduced axial-velocity

spread; these studies lead us to expect distinct improvements from beam conditioning. Experiments to test the feasibility of a beam-conditioning cavity are being planned for the ALS Beam Physics Facility (described in a previous section of this chapter) or the Accelerator Test Facility at Brookhaven National Laboratory. Such a facility would allow us to examine various candidates for beam-conditioning cavities and determine whether the idea can be realized in practice.

Beam Control Electronics

As greater demands are made on the performance of accelerators—such as increased luminosity, as in the proposed B factory PEP-II, or lower emittance, as in the ALS—it becomes ever more important to understand potentially disruptive rf phenomena within the beam chamber and to perform various rf "gymnastics" to monitor and control the beam. This is the work of the Beam Control Electronics group within Exploratory Studies. We have recently contributed to the B factory by leading the design of rf and feedback systems, and have also continued our history of contribution to the Tevatron by designing a beam-cooling upgrade for its antiproton source.

B-Factory Contributions

The major rf-design challenge posed by PEP-II is control of coupled-bunch motions. In each of the three directions (horizontal, vertical, and longitudinal) these motions have 1658 modes that may be driven strongly by the higher-order resonant modes of the rf cavities. Each higher-order cavity mode can drive a hundred or so of these motions at a growth rate thousands of times stronger than would be tolerable. The first step toward stabilization is to reduce the shunt impedances of the higher-order modes by as much as a factor of 500. Control of the remaining instabilities will then be within the reach of a practical feedback system. To reduce the shunt impedance of the higher-order modes, we attach waveguides to the cavity to couple these modes to an external resistor.

Figure 5-12 shows a possible design for such a cavity, designed and analyzed with the aid of the MAFIA code and Kroll-Yu processing of the output. Tests conducted with a simple pillbox cavity were encouraging. A low-power test cavity is now being designed so that we can make measurements. The experiments will examine which modes are damped and whether there is interference with the fundamental mode. Waveguide-load designs for removing and dissipating the higher-order-mode power will be studied as well.

Coupled-bunch modes that fall within the width of the fundamental resonance give rise to an additional driving impedance. This problem, endemic to large-circumference rings, must be addressed with active rf feedback around the cavity and its driver, a problem that we are now studying in collaboration with SLAC and LLNL. It appears that the problem of suppressing coupled-bunch modes, although difficult, can indeed be solved.

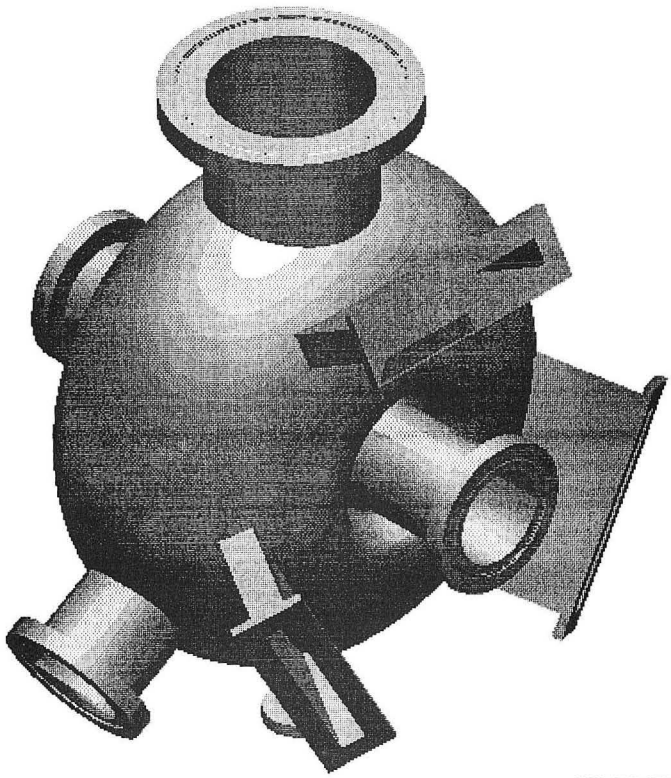

XBL 917-6775

Figure 5-12. This design for the B-factory rf cavities is being built in low-power prototype form.

Fermilab Antiproton Cooling System

The latest achievement in our ongoing collaboration with Fermilab is the design of a biplanar electrode system for cooling the beam of the antiproton source. (LBL was involved in the initial design of pickup and kicker electrodes for the source and has been continually engaged in analyzing the performance of the cooling system and seeking ways of improving it.) Earlier, we demonstrated that, for power-limited cooling systems, it is more efficient and cost-effective to double the number of cooling electrodes than to double the operating frequency.

Building upon that finding, we developed biplanar electrodes that could effectively double the number of electrodes without using any more space. This scheme, with the existing 2–4 GHz electronics, should yield better results than would a system with uniplanar electrodes and completely reworked 4–8 GHz electronics. Calculations indicate that the resulting performance would exceed the needs of any anticipated upgrade to the Tevatron complex, including the proposed new main injector.

In the past year, we confirmed the validity of our beam-cooling calculations by comparison with newly available cooling data from Fermilab. We also refined the prototype design and modified it so that its action would follow the contour of the beam envelope. Currently we are beginning to make detailed design drawings and cost estimates. (Performance measurements on a prototype were successful enough to indicate that we were ready to design a production model.) We will soon build an eight-element prototype module and measure its performance. Full production awaits a go-ahead decision by Fermilab.

Publications and Presentations

J. Bengtsson and Kwang-Je Kim, "Achromatic and isochronous electron beam transport for free electron lasers," abstract submitted to the 13th International Free-Electron Laser Conference; Lawrence Berkeley Laboratory report LBL-30674a (1991).

J. Bengtsson, E. Forest, H. Nishimura, and L. Schachingter, "Modeling in control of the Advanced Light Source," 1991 IEEE Particle Accelerator Conference (San Francisco, CA, 1991); abstract published as Lawrence Berkeley Laboratory report LBL-30732 (1991).

M. Berz, "COSY INFINITY reference manual," Lawrence Berkeley Laboratory report LBL-28881 (1991).

M. Berz, "Isochronous beamlines for free electron lasers," Nucl. Instrum. Meth. A (in press); also published as Lawrence Berkeley Laboratory report LBL-28880 (1990).

J. Candy, "Stochastic ion heating by lower hybrid turbulence," Lawrence Berkeley Laboratory report LBL-29019 (1991).

Swapan Chattopadhyay, "Design overview of infrared free electron laser for Chemical Dynamics Research Laboratory," 1991 IEEE Particle Accelerator Conference (San Francisco, CA, 1991); Lawrence Berkeley Laboratory report LBL-30002 (1991).

S. Chattopadhyay, "On storage rings for short wavelength FELs," in *Proceedings* of the OE Laser Conference on Free Electron Lasers and Applications (Los Angeles, CA, 1990), Proc. SPIE **1227**; also published as Lawrence Berkeley Laboratory report LBL-28483 (1990).

S. Chattopadhyay and M. Zisman, *Feasibility Study for an Asymmetric B Factory Based on PEP*, Lawrence Berkeley Laboratory publication PUB-5244 (1989).

P. Chen, G. Diambrini-Palazzi, K.-J. Kim, and C. Pellegrini, "Remarks on the production of gravitational waves by EM radiation and particle beams," in *Proceedings* of the 7th IEFA Workshop on Beam Dynamics (Los Angeles, CA, 1991).

P. Chen, K. Oide, A.M. Sessler, and S.S. Yu, "A plasma-based adiabatic focuser," Phys. Rev. Lett. **64**, 1231 (1990).

Y. H. Chin, "Ion motion in an undulator," Spring Meeting of the American Physical Society (Washington, DC, 1990); abstract published as Lawrence Berkeley Laboratory report LBL-28368a (1990).

Yong-Ho Chin, "Coherent radiation in an undulator," in *Proceedings* of the 4th Advanced ICFA Beam Dynamics Workshop on Collective Effects in Short Bunches (KEK, Tsukuba, Japan, 1990); also published as Lawrence Berkeley Laboratory report LBL-29981 (1990).

Yong-Ho Chin, "Double rf system for bunch shortening," Lawrence Berkeley Laboratory report LBL-29622 (1990).

Yong-Ho Chin, "Effects of non-zero dispersion at crab cavities on the beam dynamics," International Workshop on Accelerators for Asymmetric B-factories (KEK, Tsukuba, Japan, 1990); Lawrence Berkeley Laboratory report LBL-29581 (1990).

Yong-Ho Chin, "Parasitic crossing at an asymmetric B-factory, APIARY," 1991 IEEE Particle Accelerator Conference (San Francisco, CA, 1991); abstract published as Lawrence Berkeley Laboratory report LBL-29978a (1991); Lawrence Berkeley Laboratory report LBL-30701 (1991).

Y. Chin, "Symmetrization of the beam-beam interaction in an asymmetric collider," Workshop on Beam Dynamics Issues of High Luminosity Asymmetric Collider Rings (Berkeley, CA, 1990); Lawrence Berkeley Laboratory report LBL-29434 (1990).

Yong-Ho Chin, Kwang-Je Kim, and Ming Xie, "Three-dimensional free electron laser dispersion relation including betatron oscillations," abstract submitted to the 13th International Free-Electron Laser Conference; Lawrence Berkeley Laboratory report LBL-30673a (1991).

M.H.R. Donald and A.A. Garren, "Apiary B factory lattice design," 1991 IEEE Particle Accelerator Conference (San Francisco, CA, 1991); Lawrence Berkeley Laboratory report LBL-30665 (1991).

A.J. Dragt and G. Rangarajan, "Kick factorization of symplectic maps," in *Conference Record* of the IEEE Particle Accelerator Conference (San Francisco, CA, 1991), in press.

A.J. Dragt, F. Neri, and G. Rangarajan, "General moment invariants for linear Hamiltonian systems," Phys. Rev. A, in press.

E. Forest, "A Hamiltonian-free description of single particle dynamics for hopelessly complex periodic systems," submitted to Math. Physics; Lawrence Berkeley Laboratory report LBL-28471 (1990).

E. Forest, "A sixth-order Lie group integrator," Lawrence Berkeley Laboratory report LBL-28684 (1990).

Etienne Forest, "Fourth-order symplectic integration," submitted to Physica D; Lawrence Berkeley Laboratory report LBL-27662 (1990).

E. Forest and J. Irwin, "Single resonance theory with maps," Workshop on Non-Linear Problems in Future Particle Accelerators (Capri, Italy, 1990); Lawrence Berkeley Laboratory report LBL-28931 (1990).

E. Forest, J. Bengtsson, and M.F. Reusch, "Application of the Yoshida-Ruth techniques to implicit integration, multi-maps explicit integration and to Taylor series extraction," submitted to Phys. Lett. A; Lawrence Berkeley Laboratory report LBL-30616 (1991).

E. Forest, R. Keller, H. Nishimura, and M.S. Zisman, "Study of a 'relaxed' ALS storage ring lattice," Lawrence Berkeley Laboratory report LBL-28166 (1989).

Miguel Furman, "RAMPRF: a program for synchronous acceleration," 1991 IEEE Particle Accelerator Conference (San Francisco, CA, 1991); abstract published as Lawrence Berkeley Laboratory report LBL-29979a (1991); Lawrence Berkeley Laboratory report LBL-30812 (1991).

Miguel Furman, "The "hour-glass" reduction factor for asymmetric colliders," 1991 IEEE Particle Accelerator Conference (San Francisco, CA, 1991); abstract published as Lawrence Berkeley Laboratory report LBL-29977a (1991).

A. Garren and M. Sullivan, "APIARY B-factory separation scheme," 1991 IEEE Particle Accelerator Conference (San Francisco, CA, 1991); Lawrence Berkeley Laboratory report LBL-30730 (1991).

G. Gratta, K.-J. Kim, A. Melissimos, and T. Tauchi, "Report of the working group on gravitational wave detection," in *Proceedings* of the 7th IEFA Workshop on Beam Dynamics (Los Angeles, CA, 1991).

A. Hutton and M. Zisman, "PEP-II: an asymmetric B factory based on PEP," 1991 IEEE Particle Accelerator Conference (San Francisco, CA, 1991); Lawrence Berkeley Laboratory report LBL-30857 (1991).

A. Jackson, "The Advanced Light Source at the Lawrence Berkeley Laboratory," 11th International Conference on the Application of Accelerators in Research & Industry (Denton, TX, 1990); abstract published as Lawrence Berkeley Laboratory report LBL-29280a (1990).

Alan Jackson, "The Advanced Light Source: status report," 1991 IEEE Particle Accelerator Conference (San Francisco, CA, 1991); abstract published as Lawrence Berkeley Laboratory report LBL-29947a (1991).

C. Joshi, C.E. Clayton, K. Marsh, D.B. Hopkins, and A. Sessler, "Demonstration of frequency upshifting of microwave radiation by rapid plasma creation," IEEE Trans. Plasma Sci. **18**, 5 (1990), p. 814.

R. Keller, "Magnetic data analysis for the ALS multipole magnets," 1991 IEEE Particle Accelerator Conference (San Francisco, CA, 1991); abstract published as Lawrence Berkeley Laboratory report LBL-29944a (1991).

R. Keller, E. Forest, H. Nishimura, and M.S. Zisman, "Study of a 'relaxed' ALS storage ring lattice," European Particle Accelerator Conference (Nice, France, 1990); Lawrence Berkeley Laboratory report LBL-28233 (1990).

C. Kim, "Commissioning experiences of the ALS booster synchrotron," 1991 IEEE Particle Accelerator Conference (San Francisco, CA, 1991); abstract published as Lawrence Berkeley Laboratory report LBL-29946a (1991).

C. Kim, "Electron beam jitter study for the IRFEL/CDRL," 1991 IEEE Particle Accelerator Conference (San Francisco, CA, 1991); abstract published as Lawrence Berkeley Laboratory report LBL-29927a (1991).

C. Kim, "Electron Injector Studies at LBL," Bendor Workshop on Short Pulse High Current Cathodes (Bendor, France, 1990); Lawrence Berkeley Laboratory report LBL-29227 (1990).

C. Kim and J. Bengtsson, "Electron beam emittance measurements using a pepper-pot apparatus," 1991 IEEE Particle Accelerator Conference (San Francisco, CA, 1991); abstract published as Lawrence Berkeley Laboratory report LBL-29945a (1991).

K.J. Kim, "Polarization of radiation from insertion device sources," SPIE International Symposium on Optical and Optoelectronic Applied Science and Engineering (San Diego, CA, 1990); abstract published as Lawrence Berkeley Laboratory report LBL-28282a (1990).

K.-J. Kim, "Spectral bandwidth in free electron laser oscillators," Phys. Rev. Lett. **66** (1991), p. 2746; Lawrence Berkeley Laboratory report LBL-30192 (1991).

K-J. Kim, "Stability requirement and accelerator design of the IRFEL for CDF," European Particle Accelerator Conference (Nice, France, 1990); abstract published as Lawrence Berkeley Laboratory report LBL-28205a (1990).

K.-J. Kim and A. Sessler, "Free-electron lasers: present status and future prospects," Science **250** (5 October 1990) p. 88.

Kwang-Je Kim, "A survey of synchrotron radiation devices producing circular or variable polarization," Conference on Advanced X-Ray / EUV Sources: Design, Performance and Application (San Diego, CA, 1990), published in *Proc. SPIE*; also published as Lawrence Berkeley Laboratory report LBL-29490 (1990).

Kwang-Je Kim, "Note on rf photo-cathode gun," in *Proceedings* of 1 Å Free-Electron Laser Workshop (Sag Harbor, NY, 1990); also published as Lawrence Berkeley Laboratory report LBL-29538 (1990).

Kwang-Je Kim, "The evolution and limits of spectral bandwidth in free electron lasers," 12th International Free Electron Laser Conference (Paris, France, 1990), Nucl. Instrum. Meth. A (in press); also published as Lawrence Berkeley Laboratory report LBL-29724 (1990).

K.-J. Kim, "Three dimensional Madey's theorem and the generalized brightness function," Lawrence Berkeley Laboratory report LBL-30628a (1991).

K.-J. Kim and A.M. Sessler, "Analysis of photon storage cavities for a free-electron laser," in *Proceedings* of the 13th International Free-Electron Laser Conference (Santa Fe, NM, 1991), in press; Lawrence Berkeley Laboratory report LBL-31195 (1991).

K.-J. Kim, M. Berz, S. Chattopadhyay, J. Edighoffer, R. Gough, C. Kim, A.H. Kung, M. Xie, and W. Stein, "Design overview of a highly stable infrared free electron laser at LBL," 12th International Free Electron Laser Conference (Paris, France, 1990), Nucl. Instrum. Meth. A (in press); also published as Lawrence Berkeley Laboratory report LBL-29957 (1990).

Kwang-Je Kim and Ming Xie, "Stability and performance of CDRL-FEL," 12th International Free Electron Laser Conference (Paris, France, 1990), Nucl. Instrum. Meth. A (in press); also published as Lawrence Berkeley Laboratory report LBL-29853 (1990).

S. Krishnagopal and R. Siemann, "Coherent beam-beam interactions in electron-positron colliders," submitted to Phys. Rev. Lett. (1991).

S. Krishnagopal and R. Siemann, "Field calculation algorithm for general beam distributions," Lawrence Berkeley Laboratory report LBL-31094 (1991).

S. Krishnagopal and R. Siemann, "Some aspects of the two beam performance of DCI," submitted to Nucl. Instrum. Meth. A (1991); Lawrence Berkeley Laboratory report LBL-31094 (1991).

S. Krishnagopal and R. Siemann, "The coherent beam-beam interaction," in *Conference Record* of the IEEE Particle Accelerator Conference (San Francisco, CA, 1991), in press; Lawrence Berkeley Laboratory report LBL-30704 (1991).

S. Krishnagopal, M. Xie, K.-J. Kim, and A. Sessler, "Three-dimensional simulation of a hole-coupled FEL oscillator," in *Proceedings* of the 13th International Free-Electron Laser Conference (Santa Fe, NM, 1991), in press; Lawrence Berkeley Laboratory report LBL-31196 (1991).

G. Rangarajan, A.J. Dragt, and F. Neri, "Invariant metrics for Hamiltonian systems," in *Conference Record* of the IEEE Particle

Accelerator Conference (San Francisco, CA, 1991), in press; Lawrence Berkeley Laboratory report LBL-30705 (1991).

G. Rangarajan, A.J. Dragt, and F. Neri, "Symplectic completion of symplectic jets," University of California Conference on Nonlinear Science (Berkeley, CA, 1991).

G. Rangarajan, A. Sessler, and W.M. Sharp, "Discrete-cavity model of a standing-wave free-electron laser," in *Proceedings* of the 13th International Free-Electron Laser Conference (Santa Fe, NM, 1991), in press; Lawrence Berkeley Laboratory report LBL-31197 (1991).

G. Rangarajan and F. Neri, "A canonical representation of sp(2n,R)," submitted to J. Math. Phys. (1991).

F. Selph and D. Massoletti, "Operating experience with ALS linac," 1991 IEEE Particle Accelerator Conference (San Francisco, CA, 1991); abstract published as Lawrence Berkeley Laboratory report LBL-29943a (1991).

A.M. Sessler, "Introductory remarks at Yelena Bonner Lecture," Sakharov Symposium (Berkeley, CA, 1990), in *Proceedings* of 1st International A.D. Sakharov Conference on Physics (Moscow, USSR, 1991), in press.

A.M. Sessler, editor, *Proceedings* of Workshop on Beam Dynamics Issues of High-Luminosity Asymmetric Collider Rings (Berkeley, CA , 1990), American Institute of Physics, New York (1990).

A.M. Sessler, "New techniques for particle accelerators," 2nd European Accelerator Conference (Nice, France, 1990); Recent Projects and Developments in Acceleration Machines (Varenna, Italy, June 1990); abstract published as Lawrence Berkeley Laboratory report LBL-29114a (1990).

A.M. Sessler, "Some nonlinear problems in the manipulation of beams," US-Japan Workshop on Nonlinear Dynamics and Acceleration Mechanisms (Tsukuba, Japan, 1990), in *Nonlinear Dynamics and Particle Acceleration*, American Institute of Physics Conference Proceedings **230**, 165 (1991); Lawrence Berkeley Laboratory report LBL-29716 (1990).

A.M. Sessler, "The physics of beams: past, present, future," Opinion, *Physics Today* **43**, 69 (June 1990).

D.I. Sessler, J. McGuire, and A.M. Sessler, "Perioperative thermal insulation," Anesthesiology **74** (1991), p. 875.

A.M. Sessler, D.H. Whittum, and L-H. Yu, "Radio-frequency beam conditioner for fast-wave free-electron generators of coherent radiation," submitted to Phys. Rev. Lett. (1991).

A.M. Sessler, D.H. Whittum, J.S. Wurtele, W.M. Sharp, and M.A. Makowski, "Standing-wave free-electron laser two-beam accelerator," Nucl. Instrum. Meth. A **306** (1991), p. 592; Lawrence Berkeley Laboratory report LBL-30418 (1991).

W.M. Sharp et al., "Simulation of a standing-wave free-electron laser," in *Proceedings* of the 1990 Linear Accelerator Conference (Albuquerque, NM, 1990); Los Alamos National Laboratory report LA-12004-C Conference, 656 (1991); Lawrence Livermore National Laboratory report UCRL-JC-103826 (1991).

W.M. Sharp, G. Rangarajan, A.M. Sessler, and J. Wurtele, "Multi-mode simulation of a standing-wave free-electron laser," in *Proceedings* of the 13th International Free-Electron Laser Conference (Santa Fe, NM, 1991), in press.

W.M. Sharp, G. Rangarajan, A.M. Sessler, and J.S. Wurtele, "Phase stability of a standing-wave free-electron laser," in *Proceedings* of the International. Soc. Opt. Eng. (SPIE) (1991); Lawrence Livermore National Laboratory report UCRL-JC-105569 (1991).

G.A. Westenskow et al., "Relativistic klystrons for high-gradient accelerators," in *Proceedings* of the 1990 Linear Accelerator Conference (Albuquerque, NM, 1990); Los Alamos National Laboratory report LA-12004-C Conference, 656 (1991); Lawrence Livermore National Laboratory report UCRL-JC-103826 (1991).

D.H. Whittum, "Electromagnetic instability of the ion-focused regime," Phys. Fluids B (in press); Lawrence Berkeley Laboratory report LBL-31049 (1991).

D.H. Whittum, "Nonlinear, relativistic return current sheath for an ion-focused beam," Phys. Fluids B, in press; Lawrence Berkeley Laboratory report LBL-31365 (1991).

D. Whittum, A.M. Sessler and J.M. Dawson, "The ion-channel laser," Phys. Rev. Lett. **64**, 2511 (1990).

D. H. Whittum, A.M. Sessler, and V.K. Neil, "Transverse resistive wall instability in the Two-Beam Accelerator," Phys. Rev. A **43**, 1 (1991) p. 294 .

D.H. Whittum et al., "Electron-hose instability in the ion-focussed regime," Phys. Rev. Lett. **67** (1991), p. 998; Lawrence Berkeley Laboratory report LBL-29521 (1990).

Ming Xie and Kwang-Je Kim, "Hole coupling resonator for free electron lasers," 12th International Free Electron Laser Conference (Paris, France, 1990), Nucl. Instrum. Meth. A (in press); also published as Lawrence Berkeley Laboratory report LBL-29956 (1990).

Ming Xie and Kwang-Je Kim, "Performance of hole-coupled resonator in presence of FEL gain," abstract submitted to the 13th International Free-Electron Laser Conference; Lawrence Berkeley Laboratory report LBL-30672a (1991).

M. Xie and K.-J. Kim, "Spectral quality and stability of infrared free electron lasers driven by rf linacs," Spring Meeting of the American Physical Society (Washington, DC, 1990); abstract published as Lawrence Berkeley Laboratory report LBL-28464a (1990).

Ming Xie, David Deacon, and John Madey, "Resonator modes in high gain free electron lasers," 11th International Free Electron Laser Conference (Naples, Florida, 1989); Lawrence Berkeley Laboratory report LBL-27983 (1989).

L.-H. Yu, A. Sessler, and D.H. Whittum, "Free-electron laser generation of VUV and x-ray radiation using a conditioned beam and ion-channel focusing," in *Proceedings* of the 13th International Free-Electron Laser Conference (Santa Fe, NM, 1991), in press; Lawrence Berkeley Laboratory report LBL-31198 (1991).

M.S. Zisman, "An asymmetric B-factory based on PEP," European Particle Accelerator Conference (Nice, France, 1990); abstract published as Lawrence Berkeley Laboratory report LBL-28168a (1990).

M. Zisman, "Influence of collective effects on the performance of high-luminosity colliders," Workshop on Beam Dynamics Issues of High-Luminosity Asymmetric Collider Rings (Berkeley, CA, 1990); Lawrence Berkeley Laboratory report LBL-28820 (1990).

M. Zisman, "Physics and technology challenges of $B\bar{B}$ factories," 1991 IEEE Particle Accelerator Conference (San Francisco, CA, 1991); Lawrence Berkeley Laboratory report LBL-30706 (1991).

M.S. Zisman and A. Hutton, "An asymmetric B-factory based on PEP," Spring Meeting of the American Physical Society (Washington, DC, 1990); abstract published as Lawrence Berkeley Laboratory report LBL-28326a (1990).

M. Zisman, S. Chattopadhyay, A.A. Garren, G. Lambertson, E. Bloom, W.J. Corbett, M. Cornacchia, J.M. Dorfan, W.A. Barletta, D. Mohl, C. Pellegrini, D. Rice, and M. Sands, "Electron positron factories," in *Proceedings* of the 1990 Snowmass Conference (Snowmass, CO, 1990), in press; Lawrence Berkeley Laboratory report LBL-30858 (1991).