LBL-31653
UC-414

Lawrence Berkeley Laboratory
UNIVERSITY OF CALIFORNIA

ENVIRONMENT, HEALTH AND SAFETY DIVISION

To be presented at the Health Physics Society Annual Meeting, Columbus, OH, June 21–25, 1992, and to be published in the Proceedings

Application of the Moyer Method to Transverse Shielding of Linear Bremsstrahlung Sources

W.P. Swanson, R.K. Sun, and R.H. Thomas

December 1991

U. C. Lawrence Berkeley Laboratory
Library, Berkeley

FOR REFERENCE

Not to be taken from this room

LBL-31653
Copy 1
Bldg. 50 Library.

Prepared for the U.S. Department of Energy under Contract Number DE-AC03-76SF00098

DISCLAIMER

This document was prepared as an account of work sponsored by the United States Government. While this document is believed to contain correct information, neither the United States Government nor any agency thereof, nor the Regents of the University of California, nor any of their employees, makes any warranty, express or implied, or assumes any legal responsibility for the accuracy, completeness, or usefulness of any information, apparatus, product, or process disclosed, or represents that its use would not infringe privately owned rights. Reference herein to any specific commercial product, process, or service by its trade name, trademark, manufacturer, or otherwise, does not necessarily constitute or imply its endorsement, recommendation, or favoring by the United States Government or any agency thereof, or the Regents of the University of California. The views and opinions of authors expressed herein do not necessarily state or reflect those of the United States Government or any agency thereof or the Regents of the University of California.

LBL-31653

APPLICATION OF THE MOYER METHOD TO TRANSVERSE SHIELDING OF LINEAR BREMSSTRAHLUNG SOURCES

W.P. SWANSON, R.K. SUN and R.H. THOMAS*

ENVIRONMENT, HEALTH AND SAFETY DIVISION
Lawrence Berkeley Laboratory
University of California
Berkeley, CA 94720

DECEMBER 1991

This work was supported by the Director, Office of Energy Research, Office of Basic Energy Sciences, Materials Sciences Division, of the U.S. Department of Energy, Contract No. DE-AC03-76SF00098.

* Now at Lawrence Livermore National Laboratory and School of Public Health, University of California, Berkeley.

LBL-31653

Application of the Moyer Method to Transverse Shielding of Linear Bremsstrahlung Sources*

W. P. Swanson, R. K. Sun and R. H. Thomas†

Lawrence Berkeley Laboratory,

University of California,

Berkeley, CA 94720

ABSTRACT

The Moyer method is applied to the design of transverse shielding for an electron linear accelerator, assuming uniform beam power loss along the accelerator structure. Parameters for this application are given and sample calculations are shown. For a beam power loss uniformly distributed with distance along a straight line of 0.5 W m^{-1}, it is predicted that 1.2 m of concrete are needed to reduce the dose equivalent rate to 1.39 $\times 10^{-8}$ Sv s^{-1}, (5 mrem $hour^{-1}$), at a transverse distance of 3.5 m from the source.

February 24, 1992

---

* This note was found in the papers of W. P. Swanson after his death in December 1988. It has been reproduced here with minor editorial changes by R. K. Sun and R. H. Thomas. The original note was written in February 1987.

† Now at the Lawrence Livermore National Laboratory & School of Public Health, University of California, Berkeley.

Application of the Moyer Method to Transverse Shielding of Linear Bremsstrahlung Sources*

W. P. Swanson, R. K. Sun and R. H. Thomas†

Lawrence Berkeley Laboratory,

University of California,

Berkeley, CA 94720

The Moyer Method for Transverse Shielding

The "classical" Moyer method, developed for the shielding of proton accelerators, is expressed in the formula:

$$H(\theta) = H_0 r^{-2} \exp[-\beta\theta] \exp[-\frac{d}{\lambda} csc\,\theta] \tag{1}$$

for a point loss of protons [Ste82, Tho88] where the geometrical variables, r, d and θ, are defined in Fig. 1, and λ is the effective attenuation length in the shield material. The parameters H_0 (the value of the dose equivalent at $\theta = 0°$, at unit distance from the source) and β (an angular distribution parameter), again for proton sources, have been critically evaluated by Liu, et al. [Liu82, Liu84]. The generalization of this model from point- to line sources has been discussed by McCaslin et al. [McC85, McC87].

Application to Linear Bremsstrahlung Sources

The specific problem that suggested extension of the Moyer model, hitherto applied to neutron shielding, to *bremsstrahlung* line sources was that of a proposed electron linear accelerator. In a

---

* This note was found in the papers of W. P. Swanson after his death in December 1988. It has been reproduced here with minor editorial changes by R. K. Sun and R. H. Thomas. The original note was written in February 1987.

† Now at the Lawrence Livermore National Laboratory & School of Public Health, University of California, Berkeley.

preliminary study of the transverse shielding requirements, it became clear that the distributed losses along the linac would dominate the shielding requirements, except in close proximity to the target. As there are data on the strength and angular distribution of the bremsstrahlung source term, it seemed worthwhile to attempt a Moyer-type solution to the shielding of such a linear bremsstrahlung source.

If possible, it would be desirable to know the exact location and amount of particular beam losses along the linac. Such information is not usually available. Lacking such knowledge, it seemed reasonable to make a study of the dose distribution outside of shielding for the assumption of *uniform power* loss along the linac. Such a simple assumption about beam loss is convenient because the bremsstrahlung source term near 90° is proportional to the beam power dissipation in the target [Swa79]. The shape of the bremsstrahlung angular distribution around a target bombarded by electrons is given in Fig. 2. [The forward spike, indicated in the figure, is of no consequence for the transverse shielding calculations described here]. The shape of this angular distribution is independent of electron energy, over a wide range of electron energies. [Din77, Swa79, Fas84, Swa85].

The assumption of uniform energy loss implies that a greater number of electrons lost per unit length near the upstream (low-energy) end of the accelerator than at the downstream (high-energy) end. This assumption reasonably corresponds to experience. In fact the decrease in current lost would vary approximately inversely as the distance travelled by the beam. Results of such a model could be taken as indicative of the *average* transverse shielding requirement, always with the proviso that one must be prepared to add local shielding (e.g. lead collimators) at localized regions of higher than average beam loss "hot spots" that are observed during operation.

Choice of Parameters

The parameters H_0, β and λ of equation 1 appropriate to electron accelerators will differ from those used for high-energy proton accelerators. Table 1 summarizes the values of these parameters both for electrons and for protons.

In the case studied here the values of the parameters used in the *bremsstrahlung analog* of equation (1) apply to the secondary radiation field produced by electron accelerators below 600 MeV — to be contrasted with the high–energy neutrons produced by the high–energy proton accelerators.

The value of H_0 for protons is 1.60×10^{-13} Sv m^2 GeV^{-1} as derived by Stevenson et al [Ste82; also see Tho84]. The other parameter values for protons are also taken from this source as well. Values for λ and the TVLs are for concrete or earth.

For electrons, the angular distribution parameter, β, is derived from the observed slope of the bremsstrahlung dose distribution near 90° [see Fas84, p. 52 and Din77] for electrons interacting with targets of medium mass number, (e.g. copper, iron, etc). It should be emphasized that this parameter is for radiation at large angles to the electron beam, i.e., $45° \leq \theta \leq 180°$. The dose term rises very sharply at smaller angles and has a very narrow peak in the forward direction, at 0°; the behaviour at small angles is not accounted for in the parameterization given here, but this is of no importance for the calculation of transverse shielding. The coefficient, H_0, is chosen to give consistency with dose equivalents observed through shields at 90° from an electron target [Swa79, pp. 319, Fas84]. The value of λ for electrons is taken from the literature; [see Swa79, p. 174, 186]

Calculations and Results

Given the development of the Moyer-model for proton accelerators and the appropriate values of the parameters for an electron accelerator where the secondary radiation field is dominated by bremsstrahlung the calculation of the shielding is extremely simple. The particular configuration used as an example in this note is based on a 50-MeV accelerator delivering an average current of 1 μA, or an average power of 50 W. If we assume that 10% of this power is lost uniformly along a 10 m linac section, we have a power loss per unit length of 0.5 W m^{-1}.

Fig.2 illustrates the bremsstrahlung dose at 1 m from an unshielded target, at an $E_0 = 1000$ MeV, as a function of angle to the angle to the beam direction, θ_B.

Fig. 3 shows the contribution dose equivalent rate [in Sv s^{-1}] on the shield surface as the location of a 0.5 m line segment of source (0.5 w beam power loss) moves from $z = -\infty$ to $z = +\infty$. It may be seen that those line segments that substantially contribute to the dose equivalent on the shield surface from an infinite line source lie within a few meters upstream or downstream of the location at which the dose is calculated. The full widths of half maximum (FWHM) for the curves are seen to vary from about 3 m for a shield which is 2.5 TVL thick to about 4.2 m for a shield which is 1.0 TVL thick.[1]

The dose equivalent rate at the shield surface resulting from an infinite line source may be obtained by integrating the dose equivalent rate curves shown in Fig. 3 with respect to distance along the beam direction.

The values of the parameters used in the sample calculation given here are:

R = perpendicular distance to outside of the shield = 3.5 m;

$l = d/\lambda = 0, 1, 2, 3 \ldots$;

λ = the attenuation length in the shield material = 490 kg m^{-2} in concrete.

Figure 4 shows the dose equivalent rate in Sv s^{-1}, (mrem $hour^{-1}$), at a fixed transverse distance of R = 3.5 m from the beam axis as a function of concrete thickness. The curve is the dose equivalent rate near the center of an "infinitely long" linear source. The dose equivalent rate near the end of the linac (neglecting contributions from discrete targets) would be reduced about a factor of two. However, at the high-energy (downstream) end it would be necessary to consider the effect of *full beam power* incident on targets, dumps or collimators to assess the shielding requirements. Methods for accomplishing this are to be found in the literature [Swa79]..

---

[1] The original text of this paragraph by W. P. Swanson reads:
"Figure 3 shows values of the integrand as a function of distance, Z, in both directions along the source. For the choices of shielding thickness and geometry used, it is seen that the most important contribution to the dose equivalent at a point at R = 3.5 m emanates from a segment of the source that is about 4 m in length (FWHM), for 1 TVL of transverse shield, but decreases to about 3 m for thicker shields. This segment overlaps the point $Z = 0$ and the contribution peaks at about $0.5 \leq Z \leq 1.0$ m, or slightly downstream of the observation point. This supports the observation that, through reasonable amounts of transverse shielding, the effective source tends to be near 90° and of a length comparable to the distance, R. This is mainly the effect of the slant shielding for more distant contributions of the linear source."

Conclusions

Figure 4 indicates that about 1.2 m of concrete are needed to reduce the bremsstrahlung dose equivalent rate to 1.39×10^{-8} Sv s^{-1}, (5 mrem $hour^{-1}$), for the assumptions given above. This method has not yet been subjected to experimental verification, but probably is adequate to calculate the *average* transverse shield. The user should be prepared to add local shielding at points of elevated beam loss.

ACKNOWLEDGEMENT

The authors are indebted to their colleagues R.J. Kleopping, T.M. de Castro and R.E. Albert of the EH&S Division at Lawrence Berkeley Laboratory, and D.S. Myers of the Hazard Control Department at Lawrence Livermore Laboratory, for their helpful comments. It is a great pleasure to thank D.C McGraw for his support.

This work was supported by the U.S. Department of Energy under Contract No. DE-AC03-76SF00098.

REFERENCES

Din77 H. Dinter and K. Tesch, "Dose and shielding parameters of electron-photon stray radiation from a high energy electron beam", Nucl. Instrum. Methods 143, 349 (1977).

Fas84 A. Fasso, K. Goebel, M. Hoefert, G. Rau, H. Schoenbacher, G. R. Stevenson, W. P. Swanson and J. W. N. Tuyn, "Radiation Problems in the Design of the Large Electron Positron Collider (LEP)", European Organization for Nuclear Research, TIS Commission, Report No. CERN84-02 (Geneva).

Liu82 Liu Kuei-Lin, G. R. Stevenson, R. H. Thomas and S. V. Thomas, "The Variation of the Moyer Model Parameter H_0 with Primary Proton Energy", Lawrence Berkeley Laboratory, Report No. LBL-13150 (August, 1982).

Liu84 Liu Kuei-Lin, G. R. Stevenson, R. H. Thomas and S. V. Thomas, "Variance and Regression Analyses of Moyer Model Parameter Data and their Variation with Primary Proton Energy", Health Physics 46, 674 (1984).

McC85 J. B. McCaslin, W. P. Swanson and R. H. Thomas, "Moyer Model Approximations for Point and Extended Beam Losses", Lawrence Berkeley Laboratory, Report No. LBL-14699 (April 1985).

McC87 J. B. McCaslin, W. P. Swanson and R. H. Thomas, "Moyer Model Approximations for Point and Extended Beam Losses", Nucl.Instrum.Methods in Physics Research A256, 418 (1987).

Pat73 H. W. Patterson and R. H. Thomas, "Accelerator Health Physics", Academic Press, New York (1973).

Ste82 G. R. Stevenson, K. L. Liu and R. H. Thomas, "Determination of Transverse Shielding For Proton Accelerators using the Moyer Method", Health Physics 43, 13 (1982).

Swa79 W. P. Swanson,'' Radiological Safety Aspects of the Operation of Electron Linear Accelerators'', Tech. Report Series No. 188, IAEA, Vienna, (1979).

Swa85 W. P. Swanson, P. M. DeLuca, Jr., R. A. Otte and S. W. Schilthelm, ''Aladdin Upgrade Design Study: Shielding'', Synchrotron Radiation Center, University of Wisconsin, Stoughton, WI (1985).

Tho84 R. H. Thomas and S. V. Thomas, ''Variance and Regression Analysis of Moyer Model Parameter Data -- a Sequel'', Health Physics 46, 954 (1984).

Tho88 R. H. Thomas and G. R. Stevenson, ''Radiological Safety Aspects of the Operation of Proton Accelerators'', Technical Report 283, IAEA, Vienna, (1988).

FIGURE CAPTIONS

Fig. 1 Diagram showing the accelerator geometry assumed in Moyer Model calculations and defining the symbols used.

Fig. 2 Bremsstrahlung dose at 1 m from an unshielded target, per J of incident electron energy, as a function of angle to the beam direction, θ.

Fig. 3 Contribution to the dose equivalent rate at R = 3.5 m (per 0.5 m of source) as a function of distance, Z, along the linear source, for various shield thicknesses. Power loss assumed to be dP/dL = 0.5 W/m.

Fig. 4 Dose equivalent rate at distance, R = 3.5 m, from a linear bremsstrahlung source as a function of concrete shield thickness ($\rho = 2.35 \times 10^3$ kg m^{-3}).

Table 1. Comparison of parameters for proton and electron accelerators.

Parameter	Units	Accelerated Particle Type	
		Protons	Electrons
H_0	$Sv\ m^2\ J^{-1}$	1.0×10^{-3}	2.22×10^{-4}
β	$radian^{-1}$	2.3	1.32
λ	$kg\ m^{-2}$	1170	490
Derived quantities			
Tenth-Value Layer (TVL)	$kg\ m^{-2}$	2690	1130
$H_0 \times exp(-\beta\pi/2)$	$Sv\ m^2\ J^{-1}$	6.9×10^{-4}	2.8×10^{-5}

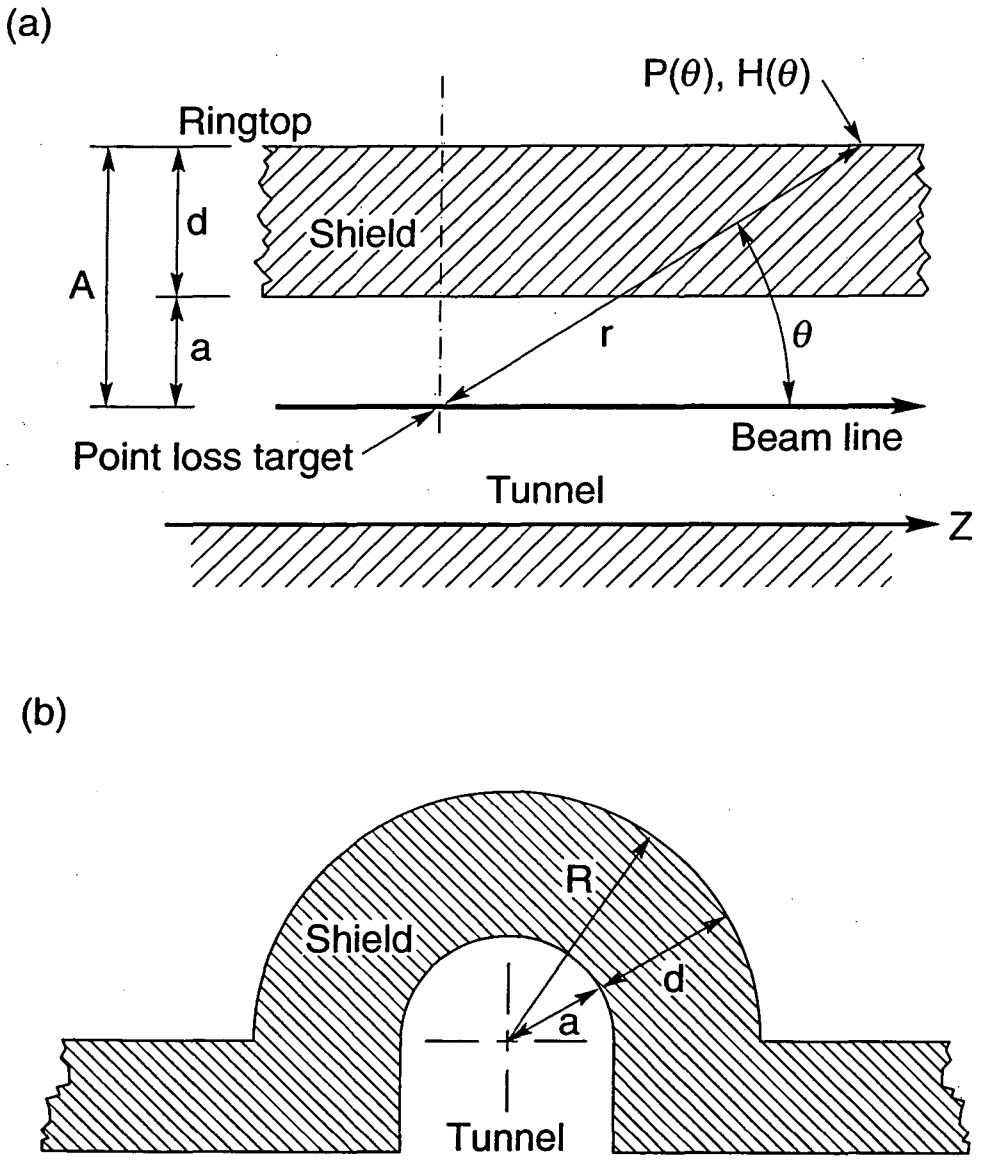

Fig. 1 Diagram showing then accelerator geometry assumed in Moyer Model calculations and defining the symbols used.

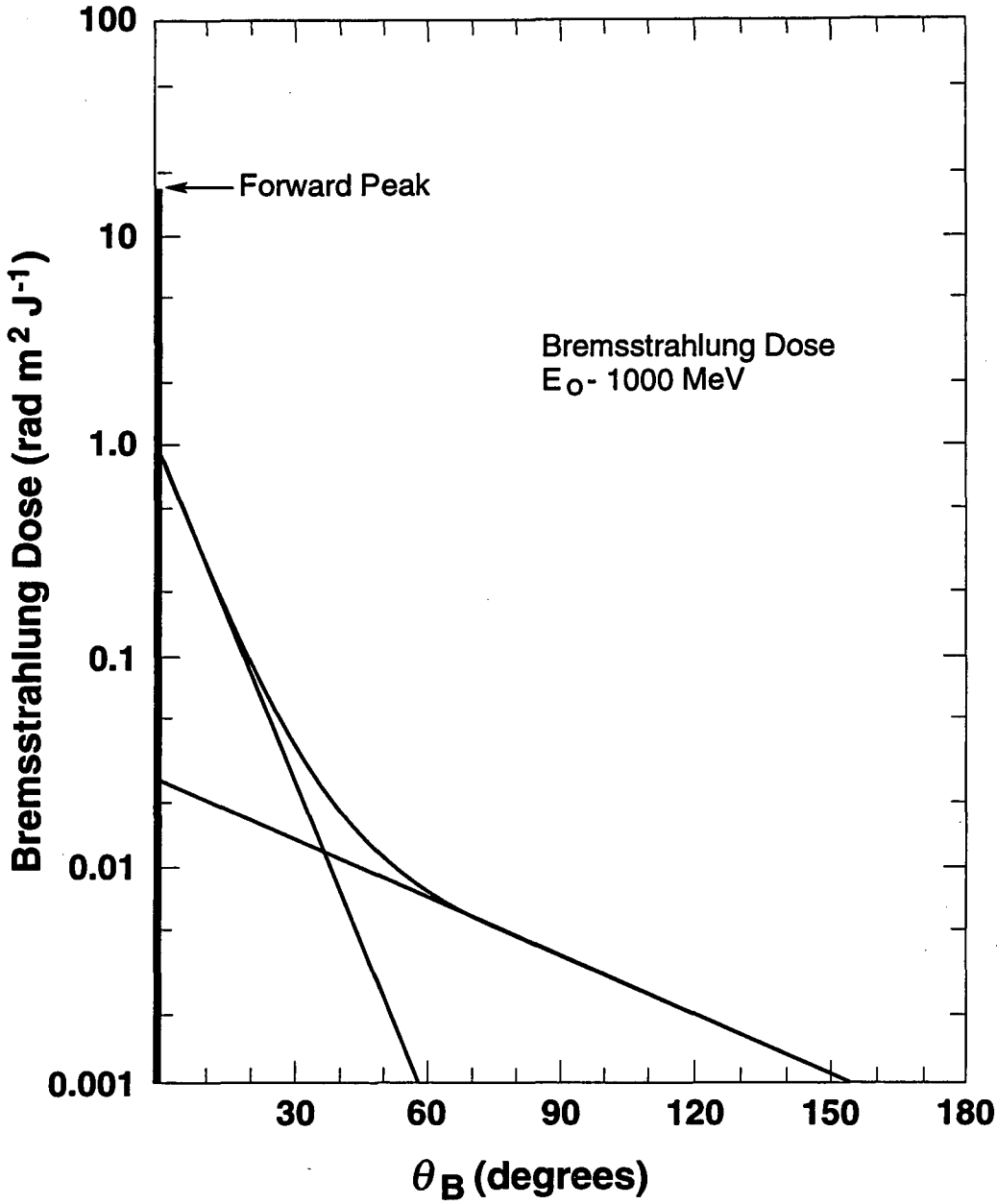

Fig. 2 Bremsstrahlung dose at 1 m from an unshielded target, per J of incident electron energy, as a function of angle to the beam direction, θ.

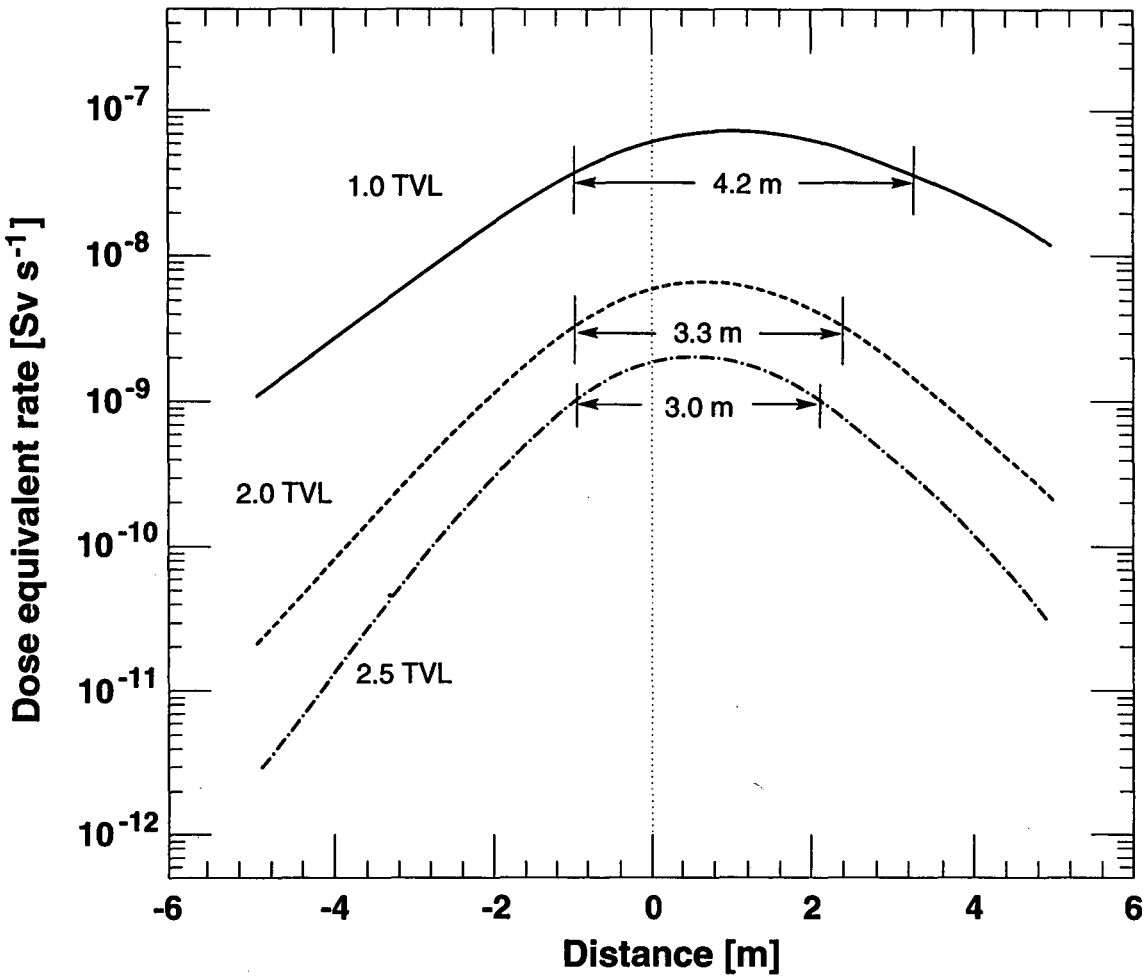

Fig. 3 Contribution to the dose equivalent rate at R = 3.5 m(per 0.5 m of source) as a function of distance, Z, along the linear source, for various shield thicknesses. Power loss assumed to be dP/dL = 0.5 W m^{-1}.

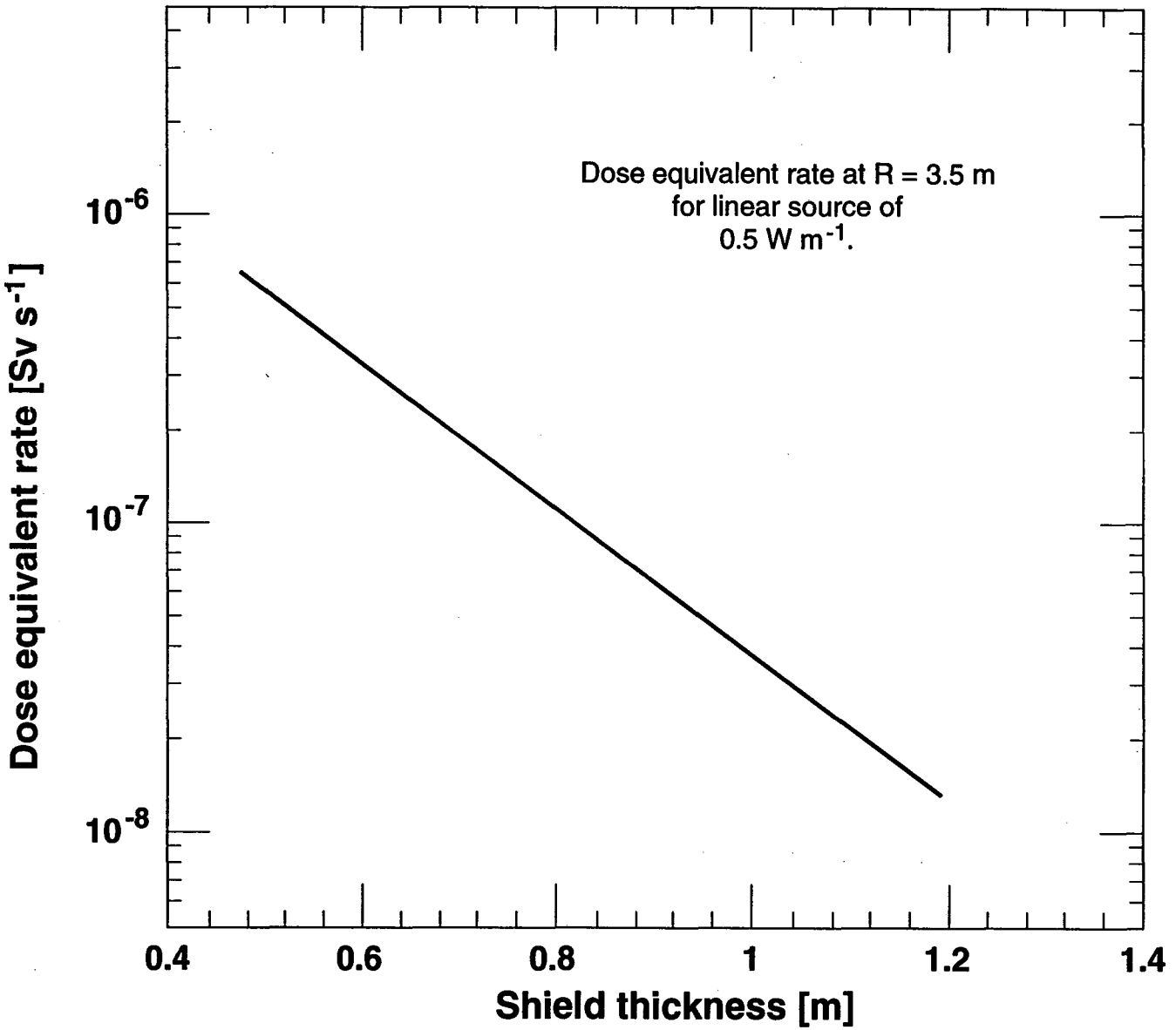

Fig. 4 Dose equivalent rate at distance, R = 3.5 m, from line source as a function of concrete thickness ($\rho = 2.35 \times 10^{3}$ kg cm $^{-3}$).

LAWRENCE BERKELEY LABORATORY
UNIVERSITY OF CALIFORNIA
TECHNICAL INFORMATION DEPARTMENT
BERKELEY, CALIFORNIA 94720