Presented at the Second Symposium on
Semiconductor Detectors for Nuclear
Radiation, Munich, Germany,
September 6-10, 1971

LBL-320
Preprint c.2

DOCUMENTS SECTION

# SOME ASPECTS OF X-RAY FLUORESCENCE SPECTROMETERS FOR TRACE ELEMENT ANALYSIS

D. A. Landis, F. S. Goulding and B. V. Jarrett

September 1971

AEC Contract No. W-7405-eng-48

TWO-WEEK LOAN COPY

*This is a Library Circulating Copy which may be borrowed for two weeks. For a personal retention copy, call Tech. Info. Division, Ext. 5545*

LBL-320
c.2

## DISCLAIMER

This document was prepared as an account of work sponsored by the United States Government. While this document is believed to contain correct information, neither the United States Government nor any agency thereof, nor the Regents of the University of California, nor any of their employees, makes any warranty, express or implied, or assumes any legal responsibility for the accuracy, completeness, or usefulness of any information, apparatus, product, or process disclosed, or represents that its use would not infringe privately owned rights. Reference herein to any specific commercial product, process, or service by its trade name, trademark, manufacturer, or otherwise, does not necessarily constitute or imply its endorsement, recommendation, or favoring by the United States Government or any agency thereof, or the Regents of the University of California. The views and opinions of authors expressed herein do not necessarily state or reflect those of the United States Government or any agency thereof or the Regents of the University of California.

# SOME ASPECTS OF X-RAY FLUORESCENCE SPECTROMETERS FOR TRACE ELEMENT ANALYSIS

D. A. Landis, F. S. Goulding and B. V. Jarrett

Lawrence Berkeley Laboratory
University of California
Berkeley, California 94720

September 1971

ABSTRACT

The application of pulsed-light feedback to low-energy X-ray spectrometers is discussed with respect to the energy resolution and counting rate performance. The use of a guard-ring detector and appropriate circuits to reduce background counts and thereby enhance sensitivity of X-ray fluorescence analysis is also discussed.

## I. THE X-RAY FLUORESCENCE PROCESS

The simple design of a semiconductor X-ray fluorescence spectrometer is shown in Fig. 1; the physical mechanisms involved in the fluorescence process are also illustrated. A wide range of methods of exciting characteristic X-rays is available. We discuss here only X-ray excitation of the sample, as our objective is to illustrate a relatively simple instrument; other, more complex, methods of excitation can be employed and may be favoured for some purposes.

The general form of the spectrum observed by a X-ray fluorescence spectrometer is shown in Fig. 2. The dominant feature of the spectrum is the large scatter peaks that may constitute 99% of the total counts observed. At the very-low-energy end of the spectrum we see the effect of scattered photons from the sample which happen to Compton-scatter from electrons in the detector and escape, leaving only the knock-on electron energy in the detector. The central region of the spectrum contains the interesting information on fluorescent X-rays emitted by the sample--unfortunately superimposed on a background that, in an ideal case, is due to photoelectrons from the detector escaping from its surface. Since the photons producing these electrons are primarily those scattered from the sample, and only part of the photon energy is converted into ionization in the detector, a continuum of pulse heights below the scatter peaks is generated by this process. As we will see later, other processes in the detector degrade events that should appear in the scatter peaks, resulting in increased background in the region of interest, thereby limiting our ability to see minute trace of impurities.



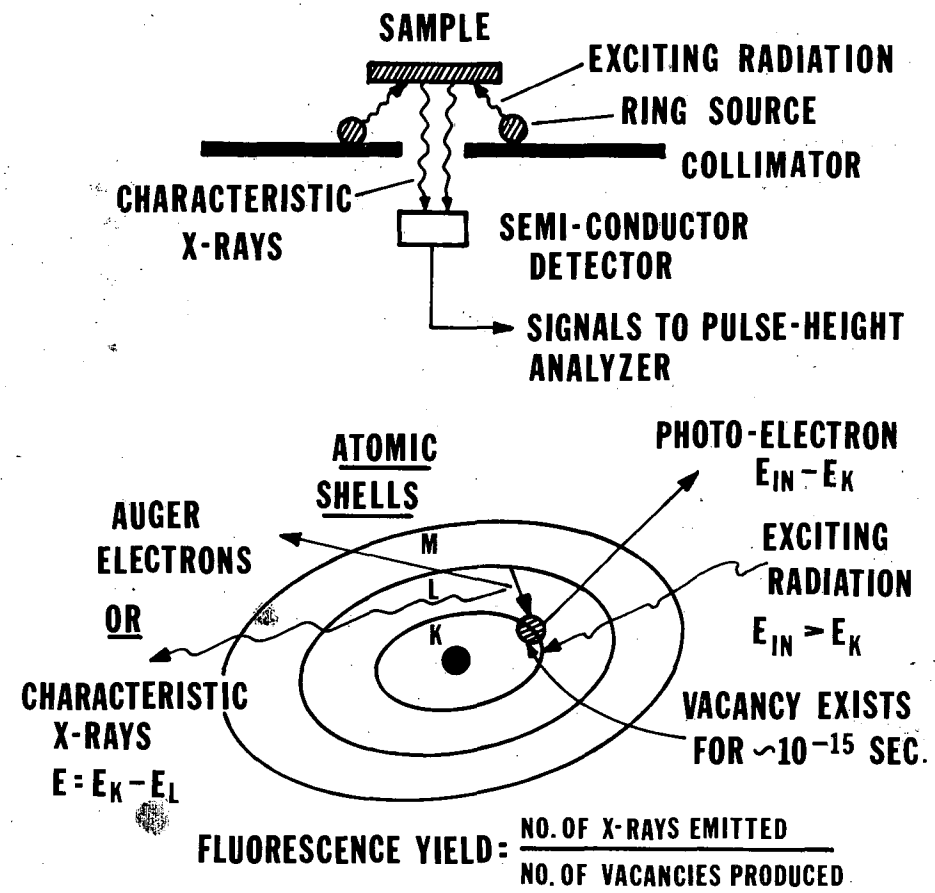


Fig. 1

Basic X-ray fluorescence spectrometer and the atomic processes.

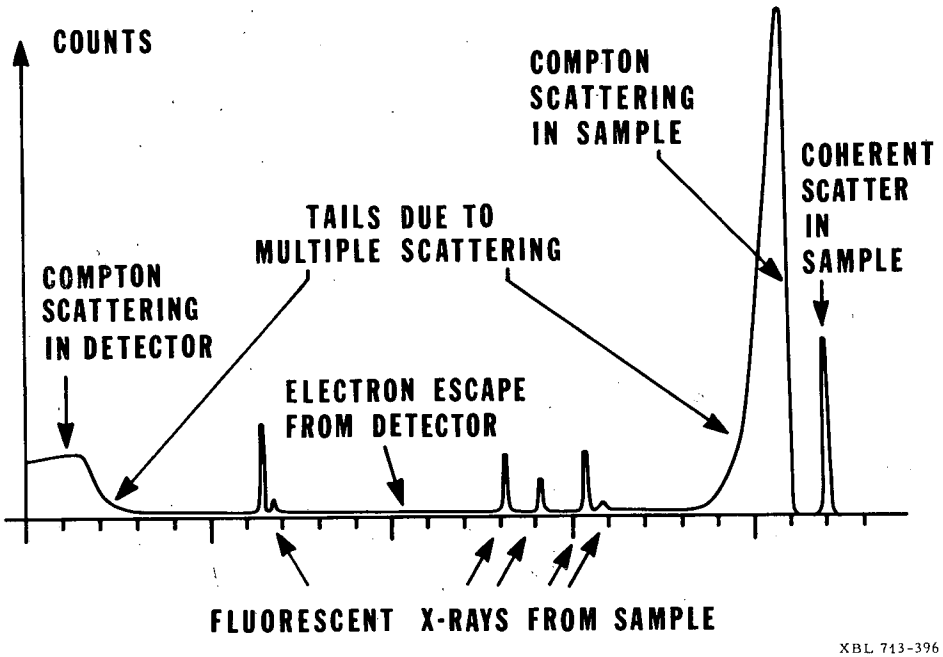


Fig. 2

Idealized spectrum observed by an X-ray fluorescence spectrometer.



This paper describes a system that has very good energy resolution and rate performance as well as reduced detector background to increase the sensitivity of detecting trace elements.

## II. ELECTRONICS

The first major step toward improving energy resolution below 2 keV full-width at half maximum (FWHM) resolution, the level common in 1964, came with the development of low-noise field-effect transistors by a number of transistor manufacturers. Earlier field-effect transistors exhibited considerable surface noise, and their performance was not superior to the vacuum tubes commonly used in earlier preamplifiers. Following the development of a new generation of FET's (notably the 2N3823, then the 2N4416), low-temperature operation of these devices to reduce noise was introduced by a number of groups. Work at the Lawrence Berkeley Laboratory in mid-1965 (1) achieved an energy resolution of 700 eV (FWHM), and stimulated the first suggestion (2) that a semiconductor detector spectrometer could provide a useful X-ray fluorescence analyzer. This resolution permits separation of elements above zinc in the periodic table.

A long slow period of development followed this initial jump in performance. Small improvements resulted from use of the 2N4416 to replace the 2N3823, from rigorous selection of these transistors, and from optimization of the operating temperature of the field-effect transistor. Changes in manufacturing techniques led to some improvement, but also some setbacks. By early 1969, a few outstanding spectrometers were capable of achieving energy resolutions as low as 250 eV (FWHM) at low energies, making separation of elements above calcium practicable.

A series of advances made at LBL over the past two years and illustrated in Fig. 3 have reduced the energy resolution of X-ray spectrometers to 100 eV or less, making possible the separation of all elements above carbon in the periodic table. The resistor, traditionally used to provide low-frequency feedback to a low-noise preamplifier as shown in Fig. 3A, was replaced by light coupling, from a light-emitting diode (LED) to the photosensitive drain-gate FET junction (Fig. 3B). (3) This step eliminated the feedback resistor, a noisy and unreliable component; it also entailed remounting the small FET silicon chip in a new package, thereby eliminating noise produced by the FET header. The elimination of these noise sources permits use of longer pulse-shaping times in the main amplifier thereby achieving energy resolution below 100 eV at low counting rates. In this simple light feedback system, nonlinearity of the LED current-light relationship degraded performance at higher counting rates. This led to the pulsed-light feedback scheme shown in Fig. 3C. (4) Here the LED is pulsed when necessary to maintain the preamplifier output in its normal range. When pulsing occurs, a reject

waveform is fed to the main amplifier, and all signals are rejected until the system resumes normal operation. Apart from the use of the FET as a photodiode, this scheme is quite similar to that first used by Kandiah (5).

Drawings of the remounted FET, light diode and zener diode, used to heat the FET, as well as their relative location in the cryostat, are shown in Fig. 4 and 5. Care is taken to keep critical leads short and rigid to reduce microphonics. Also the capacity and lossy dielectric material around the gate lead is kept to a minimum, in order to achieve the best possible resolution at the long shaping times.

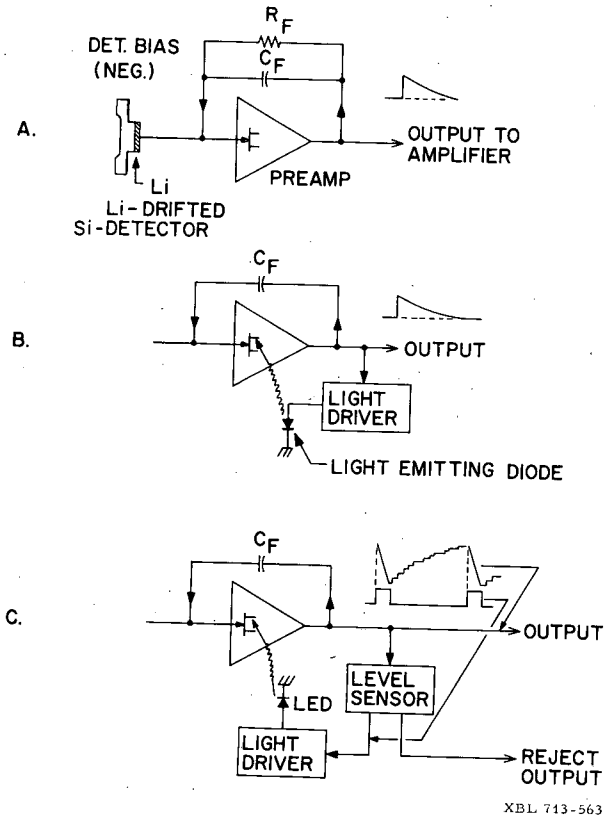


Fig. 3

Development of pulsed-light feeback preamplifier from a resistor feedback configuration.



Fig. 4

View of FET assembly, showing location of FET heater and light diode.

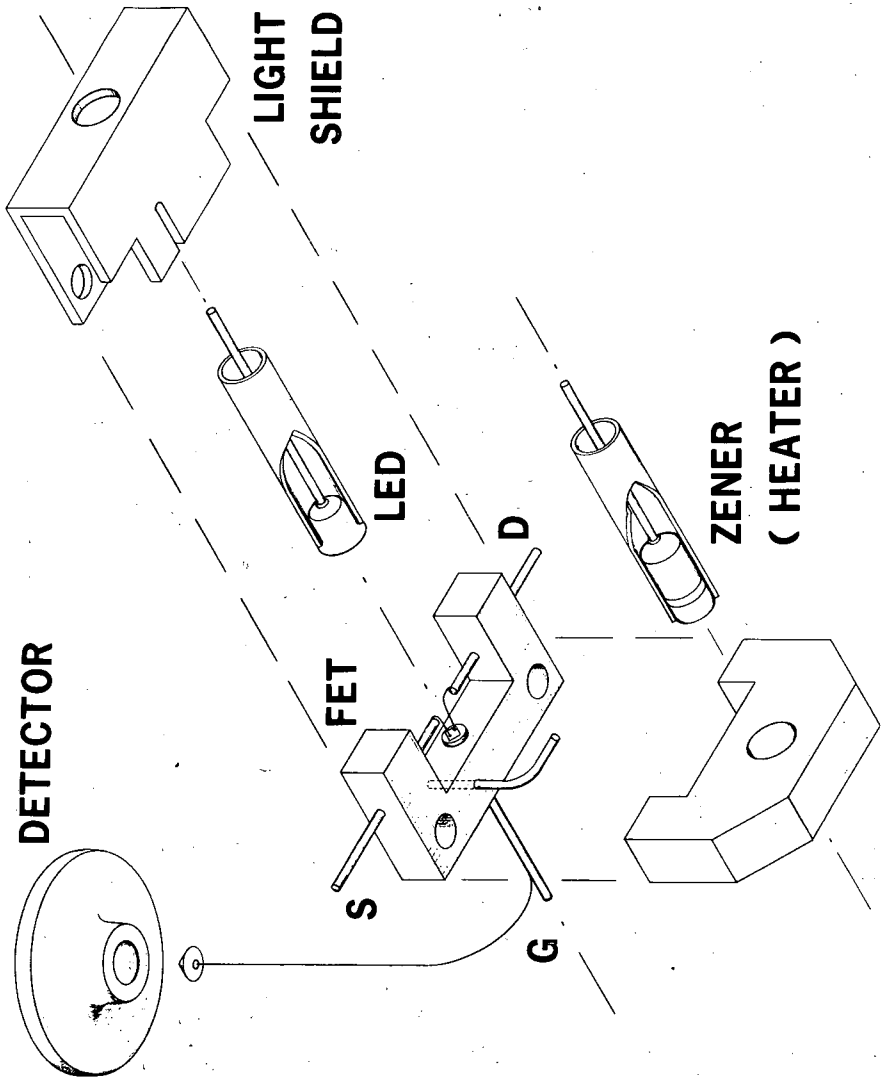


XBL 716-1078

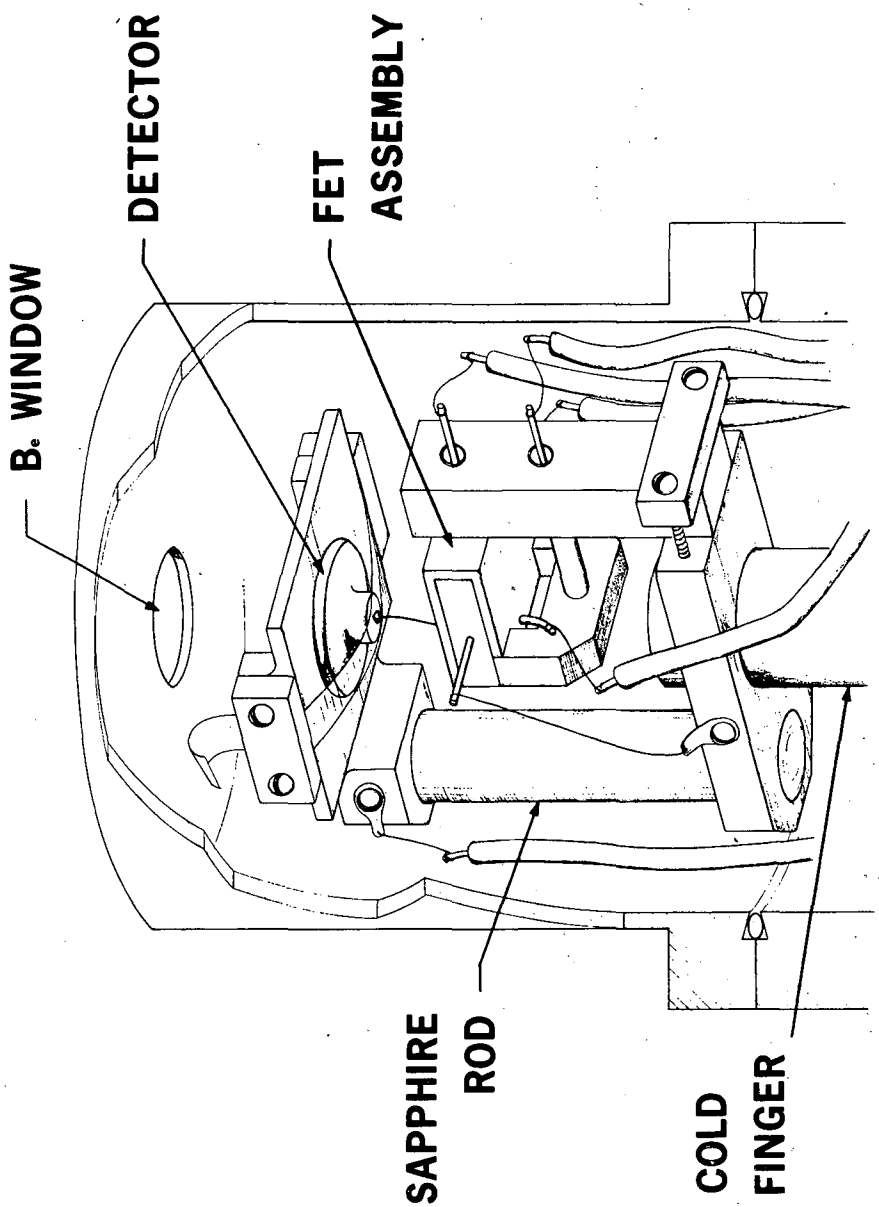


XBL 716-1077

Fig. 5

Drawing of cryostat showing FET assembly and detector.



The simplified diagram of the amplifier system used in the pulsed-light feedback unit, shown in Fig. 6, gives some idea of the complex processing performed on signals before they are allowed to proceed to a pulse-height analyzer. Signals from the preamplifier are differentiated, shaped, and amplified in a linear amplifier, then fed to a circuit that accurately fixes the baseline of the signals at zero. The action of this restorer is inhibited during the reset action in the preamplifier. A fast channel also processes the signals, looking for cases where pile-up occurs in the slow channel--in which case the events are rejected. If no pile-up occurs, the signal in the slow channel is examined; and if its level exceeds a selected bias level, the signal peak is stretched. Shortly after the signal peak, the stretched output is sampled by a linear gate, and a 2 μs-wide output signal, proportional in amplitude to the difference between the signal and the selected bias, is produced. It is an impressive demonstration of the power of modern integrated circuits that these functions--amplification, shaping, pile-up rejection, dc restoration, gating, signal stretching and biased amplification--are performed in a single small module (NIM-2 width).

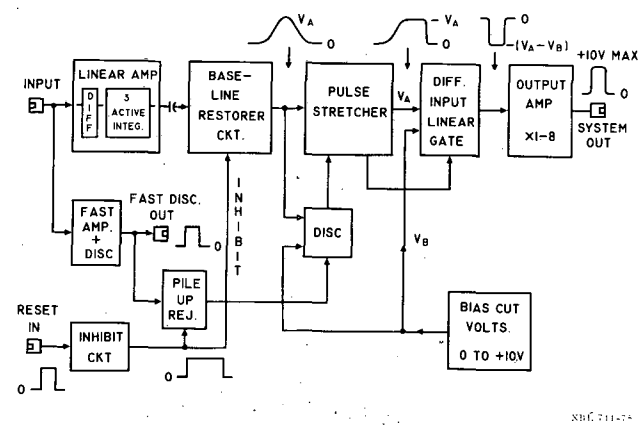


Fig. 6

Block diagram of the amplifier unit used with a pulsed-light feedback system.

The performance is equally impressive, as seen in Fig. 7 where the behaviour of an X-ray spectrometer analyzing the manganese X-rays produced by an $^{55}Fe$ source is shown. The total input counting-rate was 260,000 counts/sec; double, triple, and even quadruple pile-ups, within the 0.2 μs resolving time of the pile-up rejection circuitry, are clearly resolved.

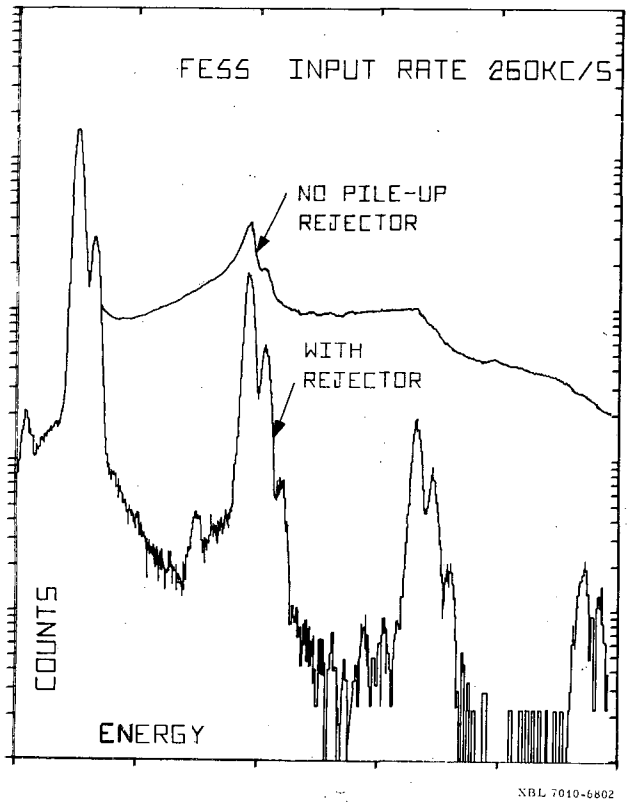


Fig. 7

High-rate performance of the pulsed-light feedback system.



Figure 8 shows the variation of energy resolution with counting rate measured on manganese X-rays produced by an $^{55}Fe$ source. Gaussian pulse shaping was used with various peaking times as indicated on the curves. Figure 8 also shows the output pulse-rate variation; the difference between it and the input counting rate represents those pulses rejected by the pile-up rejector

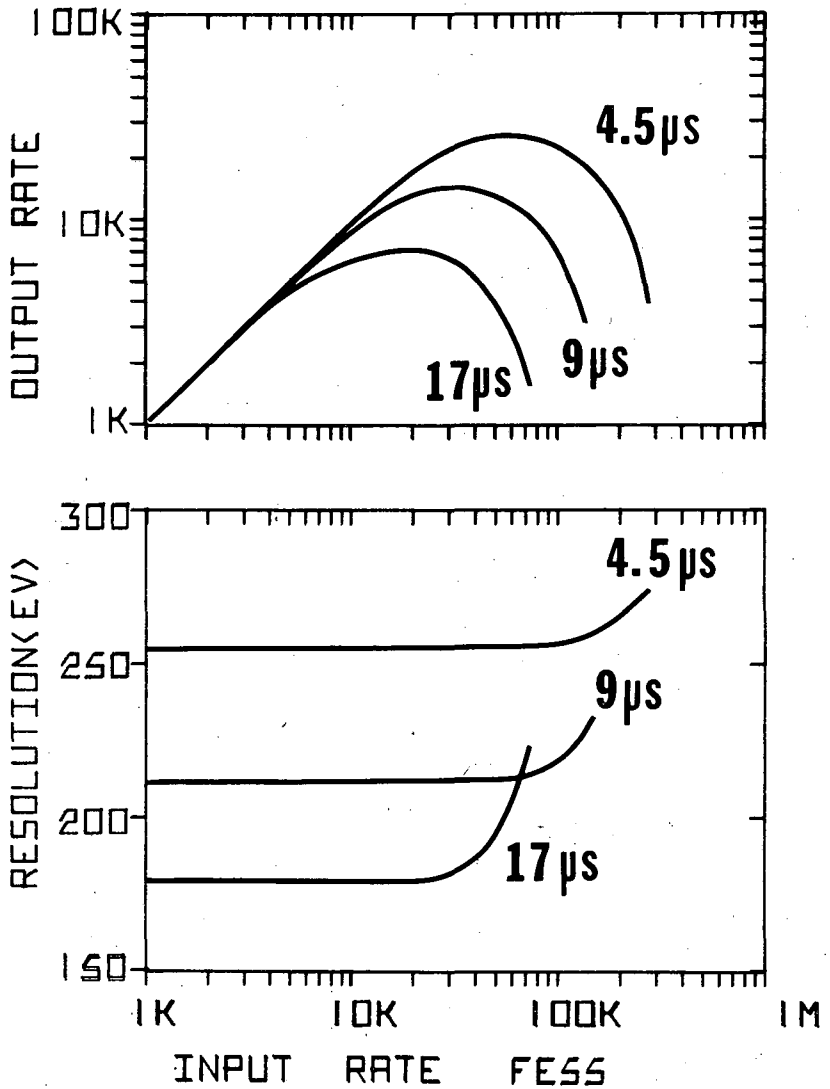


Fig. 8

Showing the effect of counting rate on resolution on Mn X-rays for different Gaussian peaking times. The output counting rate is also shown.

The most efficient input rate for the peaking time used can be determined from these curves. The dead time can be corrected by gating a live-time clock using the dead time generated by the circuit shown in Fig. 9. The number of pulses rejected is more than one might initially expect from the value of the inspection time. This is because both pulses are rejected if the second pulse comes before the peak of the first pulse, and only the second pulse is rejected if it comes after the peak of the first pulse. Consequently, we use a dead time in the clock channel approximately 1.5 times the signal inspection time thereby giving double weight to losses in the first half of the inspection period.

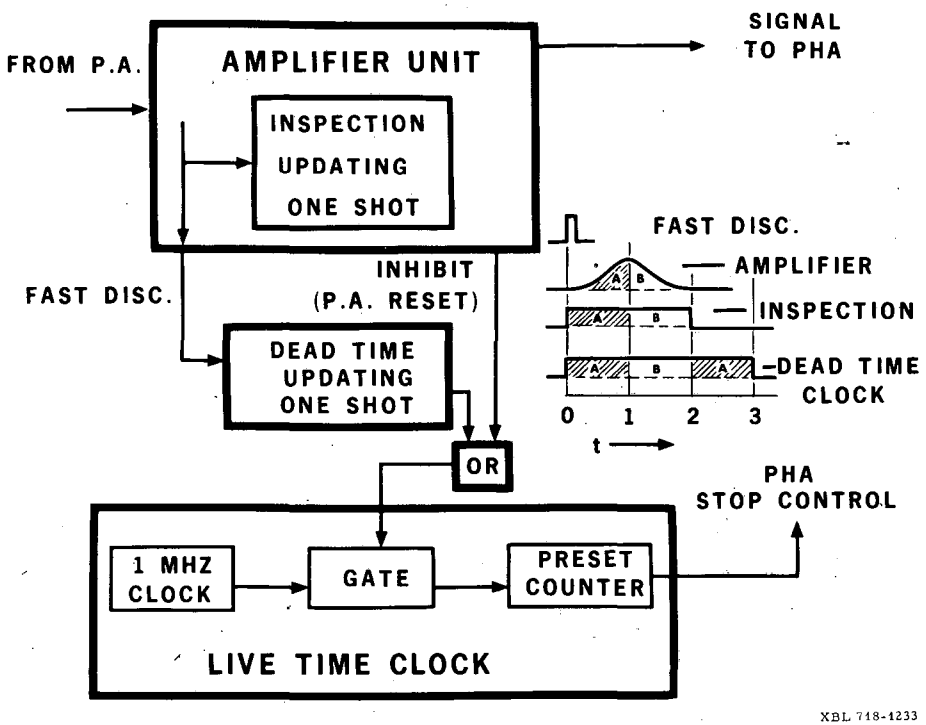


Fig. 9

Method of correcting for dead-time



## III. DETECTORS

Figure 10 shows the X-ray spectrum produced by a conventional spectrometer using molybdenum X-ray excitation of a blood serum sample. The exciting radiation was derived from a molybdenum fluorescer excited by an $^{125}I$ ring source. In a system of this type, no low-energy radiation is produced by the exciting source, and the semiconductor detector should observe only fluorescent X-rays from the sample together with the exciting radiation backscattered by the sample. In practice, well over 90% of the counts should occur in the backscatter peak at the high-energy end of the spectrum, but, if degraded in any way, they constitute a general background hiding the peaks characteristic of trace elements in the specimen. In the case shown in Fig. 10, about 20% of the backscatter events are degraded to produce background.

We shall show that these degraded background pulses are the result of imperfect charge collection in detectors, and that they can be virtually eliminated by new detector techniques.

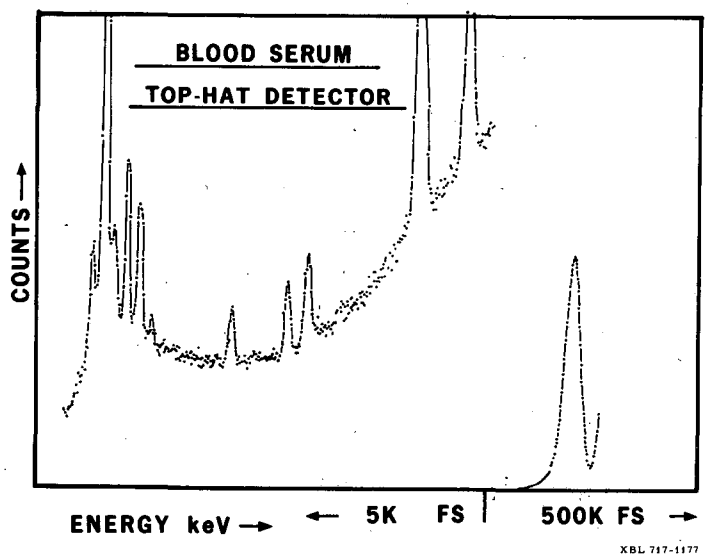


Fig. 10

Fluorescence X-ray spectrum of a blood serum specimen using a conventional silicon detector spectrometer.

A. Standard Detectors

Figure 11 shows three silicon detector configurations used in X-ray spectrometers. The first type, originally used by Miller (7) is referred to as the "top-hat" geometry, and is characterized by low-leakage current and excellent high-voltage behaviour. Both characteristics are desirable in high-resolution spectrometers, so this configuration is commonly used in these applications. The second type, the "grooved" detector, was used originally by E. Woo, and now employed in "Kevex" X-ray systems, possesses the same advantages as the "top-hat" geometry. The third geometry, generally referred to as "planar", exhibits higher leakage current and capacity than the other two types, and is therefore rarely used in X-ray spectrometers. However, its background properties probably deserve investigation. Llacer (8) analyzed the behaviour of these geometries with regard to their ability to sustain high-voltage operation, and to produce low-leakage current. His results, and those obtained in our Laboratory, indicate that an n-type surface channel normally exists on the surface of silicon detectors. This channel normally exists on the surface of silicon detectors. This channel acts as an extension of the n-type lithium-diffused region, and since it represents a poor junction to the bulk material, it contributes most of the leakage current, and sets the voltage limitation on detector operation. The fact that such channels can be "pinched-off" by internal electric fields normal to the surface explains the difference in behaviour between the structures of Fig. 11a and 11b and that of Fig. 11c.

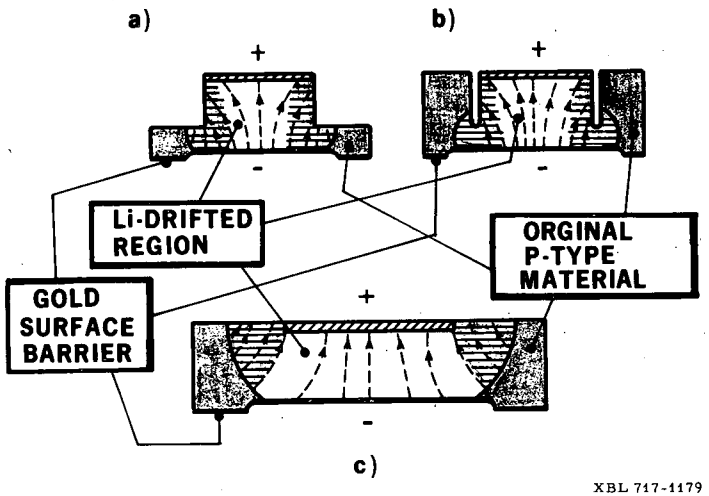


Fig. 11

Types of detector configuration used in X-ray spectrometers:
a) Top-hat detector
b) Grooved detector
c) Planar detector



These arguments fail to take into account the collection of charge produced by radiation in the bulk of the detector. The presence of n-type surface layers distorts the internal electric field pattern in the detector in such a way that collection of charge produced by X-rays interacting in some parts (shown by horizontal-line-shading in Fig. 11 is via the surface layers. This causes a loss of charge, so that signals that should appear in the backscatter peaks appear in the general background in spectra. The tests presented in this paper show that this is the predominant source of background in existing spectrometers.

At first sight it may appear that collimation of X-rays to prevent their interaction in the poor field regions might reduce background, and, indeed, tests show that some improvement can be achieved by this method. It is also obvious that improvement results from increasing the detector area while collimating to a small central region, but the large consequent increase in detector capacity seriously degrades the system resolution--an intolerable price to pay. The degree of collimation that can be used is determined by the requirement for good sample-detector geometry; as shown in the typical geometry shown in Fig. 12, this implies a wide divergence of X-rays hitting the detector. Despite the possible auxiliary collimator shown in this figure, mounted on the detector face--an expedient rarely adopted as it is difficult to change this collimator to suit the energy range of interest--X-rays like that travelling from A to B still interact in regions of poor charge collection. On the other hand, the X-ray from C to D interacts in a region of good charge collection, and produces the correct signal.

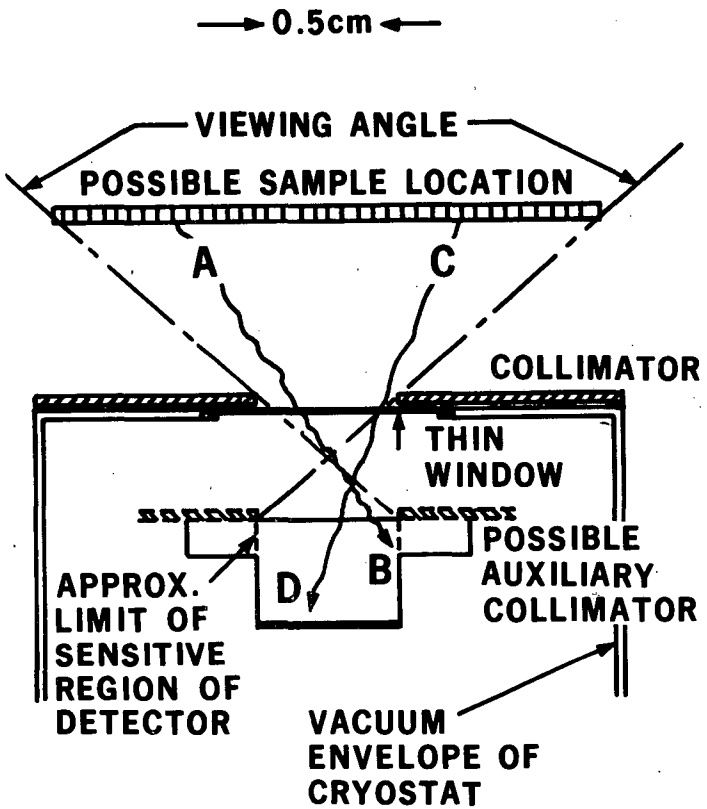


XBL 717-1175

Fig. 12

Preferred collimation geometry for an X-ray spectrometer.



B. Guard-Ring Detectors

Guard-rings have been employed for many years to overcome fringing field effects in standard capacitors, and have also found application (9) in semiconductor detectors as a device to reduce edge leakage. It therefore seems an obvious step to use a guard-ring to define the boundary of the sensitive volume of a detector by internal electric field lines rather than by a physical surface with its unknown charge-trapping characteristics. This can also be considered as an electronic collimation technique. Figure 13 shows the simple implementation of the idea; note that the output signal is derived only from the central region, while the guard ring and the central region are maintained at the same dc potential (ground).

Even this configuration suffers from a signal degradation problem at the edge of the central region. The initial X-ray interaction in this peripheral region produces a dense cloud of charge 5 microns in diameter; holes and electrons are separated by the electric field, drifting toward their appropriate electrode. The internal repulsive fields existing within the hole and electron clouds are very large compared with the drift field in the detector--therefore, the cloud dimensions rapidly increase until the internal repulsive field approaches the same value as the drift field. This means that the cloud dimensions reach about 100 microns during the charge collection process. Consequently, a peripheral region of 100 microns thickness exists around the sensitive region from which only part of the charge due to an event is collected in the central region--this means that many of the backscattered events appear in general background. Our measurements show that the background present with a simple guard-ring detector is from 2 to 10 times smaller than that with a top-hat detector, the exact factor depending on the energy of the backscatter peak.

A further reduction in background is achieved by sensing coincident signals between the guard-ring and central regions, and rejecting the central region signal when such a coincidence is registered. This "guard-ring reject" system effectively eliminates the partial collection from the peripheral region of the sensitive volume of the detector. With such an arrangement, we approach the background level expected due to electron escape from the detector surface. In our actual detector, shown in Fig. 13b, a double guard-ring is used, the outer ring serving to reduce edge leakage in the inner ring, and thereby improving its noise properties so that the inner ring signal discriminator can be set low to detect very small signals.

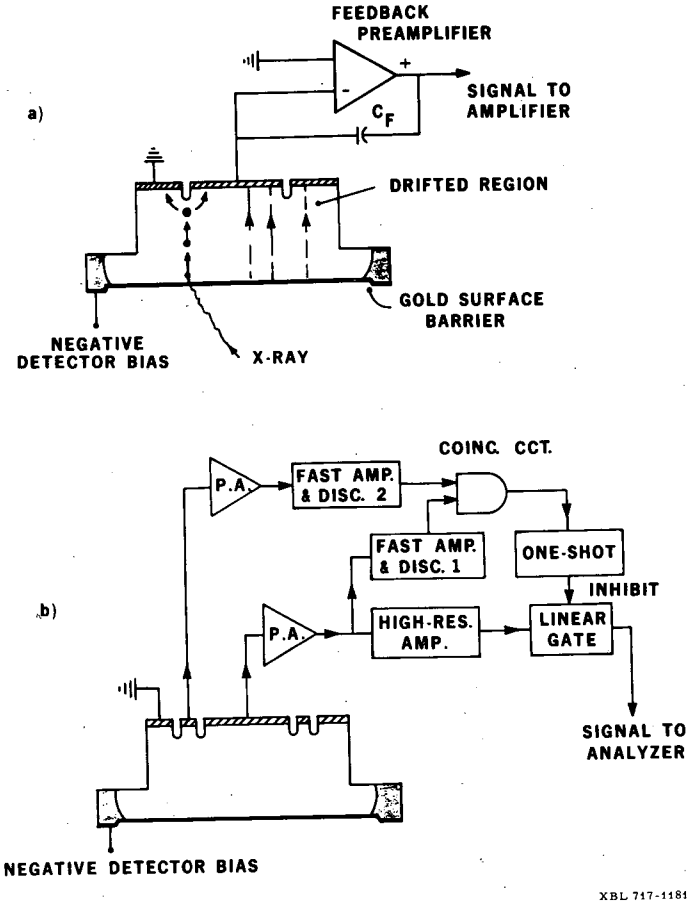


Fig. 13

Guard-ring detectors.

a) Simple guard-ring approach showing the mechanism for degraded pulses.

b) Double guard-ring detector with pulse-reject circuitry to remove degraded pulses.



The improvement in background resulting from use of the guard-ring reject method is shown in Fig. 14. Using exactly the same geometry, cadmium X-rays scattered from lucite were used to irradiate a standard top-hat detector (a), and the guard-ring reject detector system (b). For the same number of counts in the backscatter peak, the total number of counts recorded in the background is 40 times smaller for the guard-ring reject system than for the top-hat detector. Larger improvement factors are obtained when the detectors are irradiated by radiation of higher energy than cadmium X-rays.

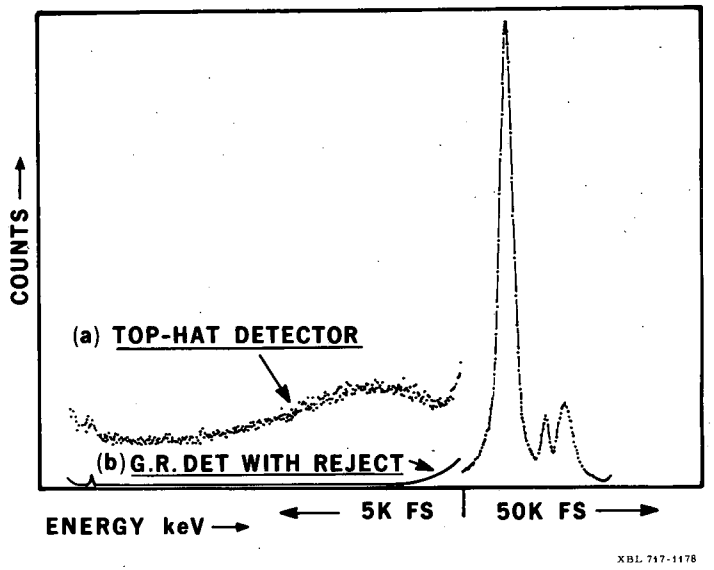


Fig. 14

Background produced in detector systems by Cd X-rays.

a) Top-hat detector.
b) Guard-ring detector with reject circuitry.

Figure 15 illustrates the improvement achieved by using this technique on a typical sample. The same blood serum used for Fig. 10 was examined, and the same total number of counts was accumulated in the molybdenum X-ray backscatter peak. The reduction in background seen in this spectrum, averaged over the full energy range, is about a factor of 15. Much larger factors, ranging up to about 60, have been observed for higher-energy excitation. Comparison of the two spectra in Fig. 10 shows the improvement, due to the guard-ring reject system, in our ability to see small traces of elements, such as nickel, present in the specimen at a level near 0.1 ppm. Better statistics realized by a longer count, or with more intense excitation, would further reduce the detection limit.

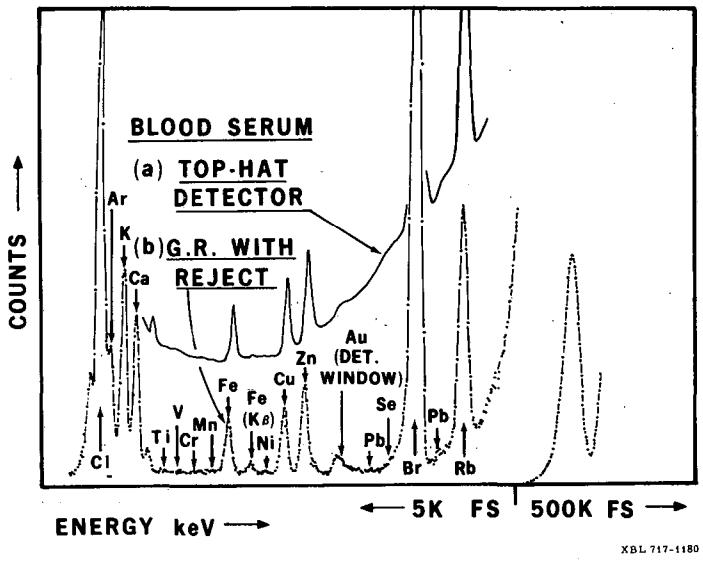


Fig. 15

Fluorescence X-ray spectrum obtained on a blood serum specimen using a spectrometer equipped with guard-ring detector and reject circuitry (b). For comparison, the spectrum obtained on the same sample with the same geometry, and the same total counts in the scatter peak, but with a simple top-hat detector, is also shown (a). This is a smooth curve drawn through the points of Fig. 10.



Apart from the generally flat background due to the detector, another type of background can exist in X-ray spectrometers, and must be recognized or eliminated if correct interpretations of spectral features are to be made. This background is due to fluorescence of elements in the collimators or detector used in the spectrometer, which are excited by the scattered photons from the sample. Figure 16 illustrates the nature of the background in a typical system irradiated with zirconium X-rays. Several of the peaks observed (iron, copper and zinc) can be attributed to impurities in the molybdenum collimators used in the experiment. However, the two peaks in the vicinity of the gold L X-ray lines are of special importance due to their proximity to the normal location of mercury L X-ray lines. Since mercury is of particular importance in trace-element analysis, the situation shown in Fig. 16 is particularly unfortunate.

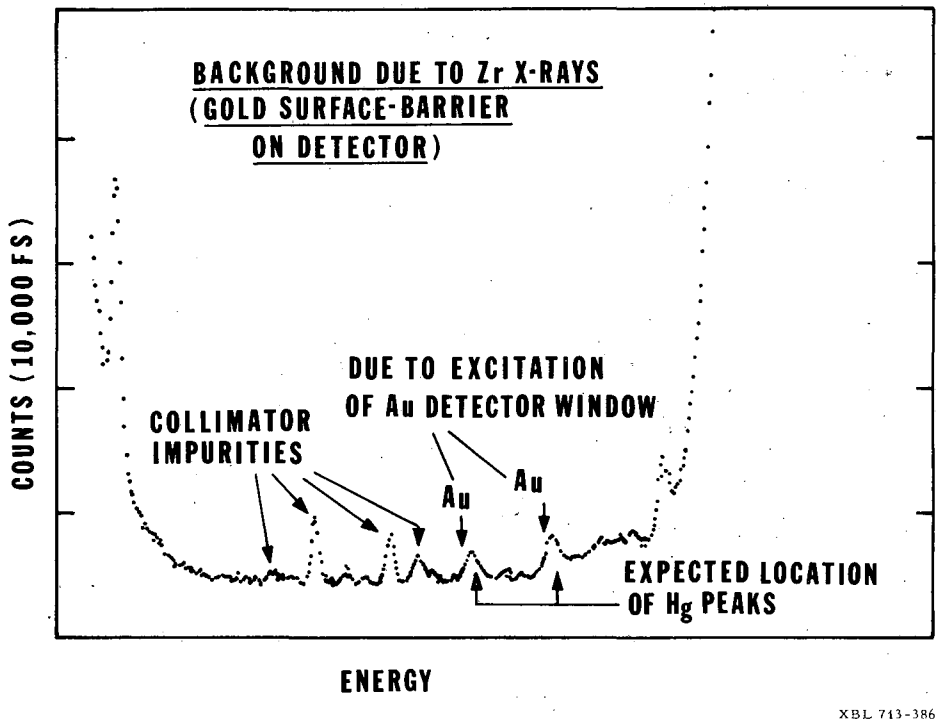


Fig. 16

Spectrum produced by direct irradiation of the detector by Zr X-rays. The effects of the thin gold surface-barrier layer on the detector are clearly shown.

The source of this problem is now known to be the very thin (~200Å) gold surface barrier present on the entry side of the detector. Fluorescence of the gold produces characteristic gold X-rays, but photoelectrons and Auger electrons, coincident in time with the X-rays, are also produced. Since the gold is in direct contact with the sensitive volume of the detector, some of the energy of these electrons may be deposited in the sensitive region of the detector, adding to the X-ray signal. Close examination of Fig. 16 shows that the resulting peaks are shifted to the right of the correct location for gold X-rays, and the peaks broader than would normally be expected and skewed on the high-energy side. This phenomena may lead to false identification of mercury in samples. If mercury is to be measured, materials other than gold must be used to form the surface barrier on the entry side of the detector. It is difficult to achieve non-injecting barriers with other metals, but we have demonstrated that suitable processing can be devised to form Ni, Al and palladium-silicide barriers with suitable characteristics. The remaining results presented in this paper were obtained with detectors having either nickel or aluminum surface barriers at the X-ray entry side. Our more recent work suggests that the palladium-silicide barrier is probably the most satisfactory.

## IV. EXAMPLES OF APPLICATIONS

Semiconductor X-ray spectrometers are distinguished by their ability to simultaneously survey a whole spectrum of trace elements present in samples at levels substantially lower than 1 ppm. More sensitive methods can be devised for particular elements: for example, atomic absorption can be used for such elements as mercury. Neutron activation can exhibit greater sensitivity than X-ray fluorescence for some elements; but its sensitivity is poor for many elements, and the activation process is slow and costly. The activation of sodium in biological samples necessitates a long "cooling off" period (often a month) before a sample can be analyzed. Other methods, including atomic absorption, require extensive sample preparation, while X-ray fluorescence requires very little, though removal of water by freeze-drying is useful in many cases. For these reasons, it seems that X-ray fluorescence analysis may find a wide range of applications.

Medical applications of this technique could turn out to be the most important. Studies (10) have shown that trace elements in blood may correlate with disease states, indicating a possible diagnostic technique. Other readily available samples include urine, hair, faeces, fingernails, etc.; the statistical correlations between trace elements in these various samples and disease have hardly been studied at all--mostly due to the lack of a suitable fast, convenient, and accurate method of measurement. Semiconductor-detector X-ray fluorescence spectrometers may well stimulate new interest in this field of study.



More specific types of problem also arise in medicine. The examination of organs for trace elements may be an important tool in studying the accumulation of elements in organs and its relationship to diseases, including cancer. One example is the analysis of blood samples for lead, as an indicator of lead poisoning in infants. The X-ray fluorescence method is sensitive enough for this purpose as illustrated in Fig. 17, where lead is clearly determined in a freeze-dried sample (about 3 ml) of blood obtained from a child showing slight clinical symptoms of lead poisoning. Detection of lead at levels indicative of lead poisoning is clearly a simple matter.

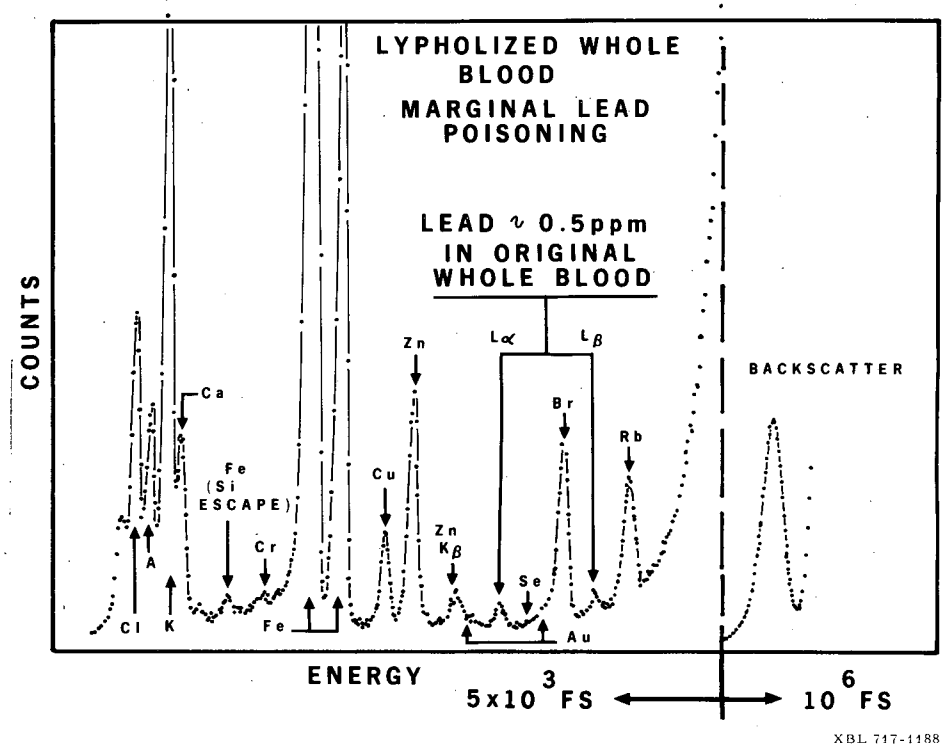


Fig. 17

Freeze-dried whole blood--original blood volume = 3 ml.

Elemental analysis of particulate deposits on air pollution filters presents a simple problem for this technique. With short sample-collection times, the mass of the particulate deposit becomes a substantial fraction of the air-filter material. Consequently, when the filter is subjected to analysis, background due to back-scatter in the filter material is quite small. An example of air-filter analysis is shown in Fig. 18. The quantity of lead measured in this sample (from Detroit) corresponds to almost 2 μg/metre$^3$ of air, a typical number for air in an industrial area.

A transmission-anode type X-ray tube (11) was used to expose the sample for only ten minutes to produce this result--opening up the possibility of on-line analysis of pollution with the capability of seeing fluctuations in particulate pollutants on a time-scale much shorter than an hour.

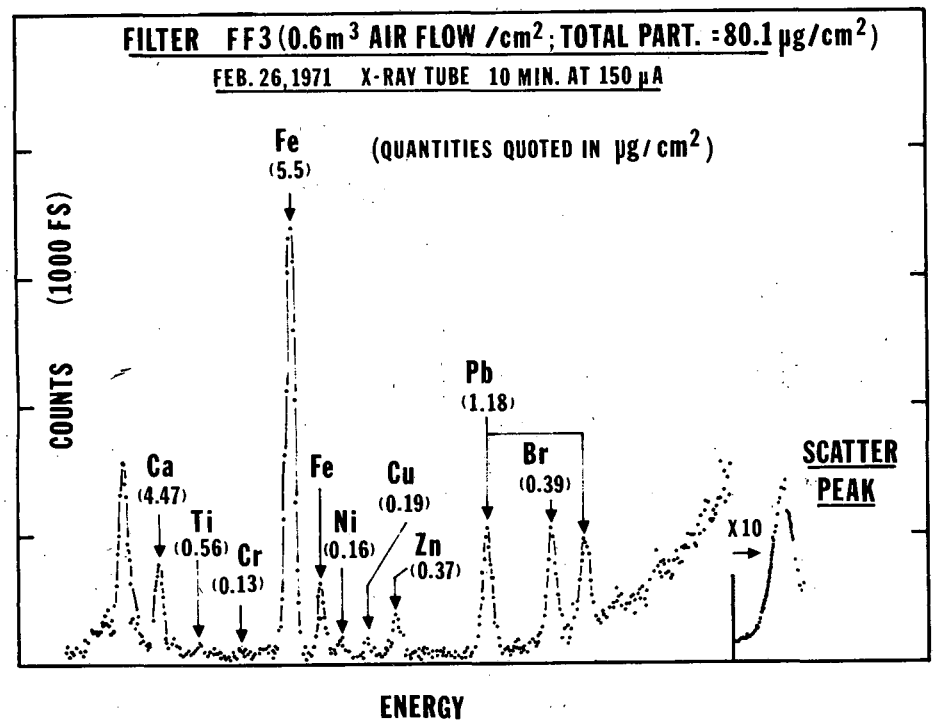


Fig. 18

Air-filter spectrum.



## IV. CONCLUSIONS

The reduction of detector background and improvements in both resolution and counting-rate capabilities of the associated electronics, have resulted in an instrument providing an entirely new capability in elemental analysis. High-speed analysis of biological and other samples, for a broad range of elements present at levels less than 0.1 ppm can be carried out using X-ray fluorescence.

## V. ACKNOWLEDGMENTS

The results given in this paper have depended heavily on the assistance of W. Searles and J. Jaklevic in all phases of the work, on the detector developments of J. Walton and H. Sommer, and on the electronic circuit work of C. J. Huguley, S. Wright and A. Jue. D. Malone and J. Anderson have designed and constructed mechanical parts used in the systems. Discussions with R. Pehl, W. Hansen, H. Maccabee and others, have contributed many ideas to the project.

## REFERENCES

1. E. Elad, Nucl. Instr. and Methods 37, 327 (1965).

2. H. R. Bowman, E. K. Hyde, S. G. Thompson and R. C. Jared, Science 151, 562 (1966).

3. F. S. Goulding, J. Walton, D. Malone, Nucl. Instr. and Methods 71, 273 (1969).

4. D. A. Landis, F. S. Goulding, R. H. Pehl and J. T. Walton, IEEE Trans. on Nucl. Sci., NS-18, No. 1, 115-124 (1971).

5. K. Kandiah, A. Stirling, "Semiconductor Nuclear-Particle Detectors and Circuits", National Academy of Sciences Publication 15943, 495 (1969).

6. Veljko Radeka, State of the Art of Low Noise Amplifiers for Semiconductor Radiation Detectors", Brookhaven National Lab, International Symposium on Nuclear Electronics (Versailles, September 1968) 46-1 to 46-28.

7. G. L. Miller, private communication referenced in Llacer's paper (Ref. 2) p. 99.

8. J. Llacer, "Geometric Control of Surface Leakage Current and Noise in Lithium Drifted Silicon Radiation Detectors", IEEE Trans. Nucl. Sci., NS-13, No. 1, p.93 (1966).

9. W. Hansen and F. S. Goulding, "Leakage, Noise and Guard Rings and Resolution in Detectors", Proceedings of Asheville Conference NAS-NRC Report No. 32, 202 (1961).

10. J. W. Gofman,"Chemical Elements in the Blood in Health", in Advances in Biological and Medical Physics, Vol. 8 (1962) p. 1, Ed. C. A. Tobias, J. W. Lawrence (Academic) also UCRL-10211 p. 62; Semiannual Report, Biology and Medicine Donner Laboratory.

11. J. M. Jaklevic, R. D. Giauque, D. F. Malone and W. L. Searles, "Small X-ray Tubes for Energy Dispersive Analysis Using Semiconductor Spectrometers", Lawrence Berkeley Laboratory Report LBL-10. Presented at the 20th Annual Denver X-ray Conference, August 11-13, 1971.

LEGAL NOTICE

*This report was prepared as an account of work sponsored by the United States Government. Neither the United States nor the United States Atomic Energy Commission, nor any of their employees, nor any of their contractors, subcontractors, or their employees, makes any warranty, express or implied, or assumes any legal liability or responsibility for the accuracy, completeness or usefulness of any information, apparatus, product or process disclosed, or represents that its use would not infringe privately owned rights.*

*TECHNICAL INFORMATION DIVISION*
*LAWRENCE BERKELEY LABORATORY*
*UNIVERSITY OF CALIFORNIA*
*BERKELEY, CALIFORNIA 94720*