0 0 0 0 4 2 0 2 5 4 2

Submitted to Review of Scientific Instruments

LBL-3230
Preprint c.1

DESIGN OF A SIMPLE AND INEXPENSIVE ANALOG GATE

H. Rosen, P. Robrish, G. Jan de Vries

January 1975

Prepared for the U. S. Atomic Energy Commission
under Contract W-7405-ENG-48

For Reference

Not to be taken from this room

LAWRENCE BERKELEY LABORATORY
UNIVERSITY OF CALIFORNIA
BERKELEY

LBL-3230
c.1

DISCLAIMER

This document was prepared as an account of work sponsored by the United States Government. While this document is believed to contain correct information, neither the United States Government nor any agency thereof, nor the Regents of the University of California, nor any of their employees, makes any warranty, express or implied, or assumes any legal responsibility for the accuracy, completeness, or usefulness of any information, apparatus, product, or process disclosed, or represents that its use would not infringe privately owned rights. Reference herein to any specific commercial product, process, or service by its trade name, trademark, manufacturer, or otherwise, does not necessarily constitute or imply its endorsement, recommendation, or favoring by the United States Government or any agency thereof, or the Regents of the University of California. The views and opinions of authors expressed herein do not necessarily state or reflect those of the United States Government or any agency thereof or the Regents of the University of California.

0 0 0 0 4 2 0 2 5 4 3

LBL-3230

DESIGN OF A SIMPLE AND INEXPENSIVE ANALOG GATE*

H. Rosen and P. Robrish

Lawrence Berkeley Laboratory
Energy & Environment Division
University of California
Berkeley, CA 94720

and

G. Jan de Vries

Space Sciences Laboratory
Lawrence Berkeley Laboratory

January 1975

---

*Research supported by National Science Foundation, RANN Division and U.S. Atomic Energy Commission.

0 0 0 0 4 2 0 2 5 4 4

ABSTRACT

We have designed and built a simple and inexpensive analog gate which, when used in combination with an electrometer and a high gain photomultiplier, has a sensitivity of better than 1 photoelectron/sec and a linearity of better than 10% over a dynamic range of 1000.

Pulsed lasers are often used as light sources for Raman scattering, fluorescence, luminescence and absorption studies. Since the duty cycle of these sources is usually very poor, one would like to design detection electronics which are sensitive for only a small time interval around the laser pulse, in order to improve signal to noise. For example, if one uses a nitrogen-laser-pumped dye laser, its output might typically consist of 5 ns pulses at a repetition rate of 10 Hz. The risetimes of typical photomultipliers are a few nanoseconds; therefore, except at very low light levels ($\lesssim$ 1 photoelectron/pulse), one cannot use photon counting techniques since the photoelectron pulses will, in general, pile up. It is, therefore, necessary to integrate the charge from the photomultiplier. In the absence of a gating scheme, even a low noise, high gain tube, such as an RCA 8575, contributes a background noise equivalent to about 10^4 photoelectrons/sec. It is apparent that even a rather slow gate will improve things significantly. For example, a 10 μsec gate operating at 10 Hz will reduce the background level to 1 photoelectron/sec.

We have designed and built a simple and inexpensive analog gate which is used in combination with an electrometer operating as a ratemeter. The output of the ratemeter is displayed on a chart recorder. This detection scheme has a sensitivity of better than 1 photoelectron/sec and a linearity of better than 10% over a

dynamic range of 10^3. Also, since the electronics are charge sensitive, they are rather insensitive to the large burst of r.f. noise generated from the pulsed laser source. A schematic of the gate is shown in Fig. 1. The input signal is taken directly from the unterminated anode of a photomultiplier and the gate output is fed into an electrometer. The heart of the gate is a low leakage Siliconix 2N4117A FET which has a gate reverse current of $\leq$ 1 picoamp. When the gate is in its quiescent state, the 2N4117A is non-conductive, while the 2N5461 FET conducts any charge appearing on the input line to ground. When a gating pulse occurs (0 to +5 TTL), the 74121 one shot produces a 15 μsec pulse. This pulse, after going through appropriate shaping circuitry, turns off the 2N5461 FET and turns on the 2N4117A FET so that charge can pass to the electrometer. Unfortunately, the gating pulse is also capacitively coupled to the input line, allowing some spurious charge to reach the electrometer. We have been able to cancel this spurious signal effectively by connecting a 300 pf capacitor to the input line and applying an adjustable voltage pulse to it. The zener diodes connected to the input line serve to protect the 2N4117A FET from large input signals.

In Fig. 2 we present a typical resonance Raman spectrum of NO_2 taken using our gate and an E-H Research Laboratories Model 215 electrometer. The electrometer time constant was 1 sec. The laser used to obtain this spectrum was a nitrogen-laser-pumped dye laser with .2 mW of average power. The scattered light passed thru a Jarrell Ash Double Monochromator and was detected by an RCA 8575

photomultipler operated at 2500 V. The most intense line in the spectrum corresponds to a signal of about 100 photoelectrons/sec and the background noise level is about ± 2 photoelectrons/sec. The signal to noise in this spectrum is excellent but it can be improved further by using larger time constants.

In conclusion, we have designed and built an analog gate, from parts costing approximately twenty dollars, which has excellent sensitivity, good dynamic range, and which operates reliably in a high-r.f.-noise environment. It can be used for any experiment with pulsed light sources in which one wants to measure a small pulsed signal in the presence of a large D.C. photoelectron background.

ACKNOWLEDGEMENT

We would like to thank Owen Chamberlain for his encouragement and helpful discussions throughout the course of this work.

FIGURE CAPTIONS

1) Schematic of Analog Gate

2) Resonance Raman spectrum of NO_2 taken with our analog gate in combination with an E-H Research Laboratory Model 215 electrometer and an RCA 8575 photomultiplier operated at 2500 V. The time constant of the electrometer was 1 sec and the dye laser average power was .2 mW.

0000420254 7

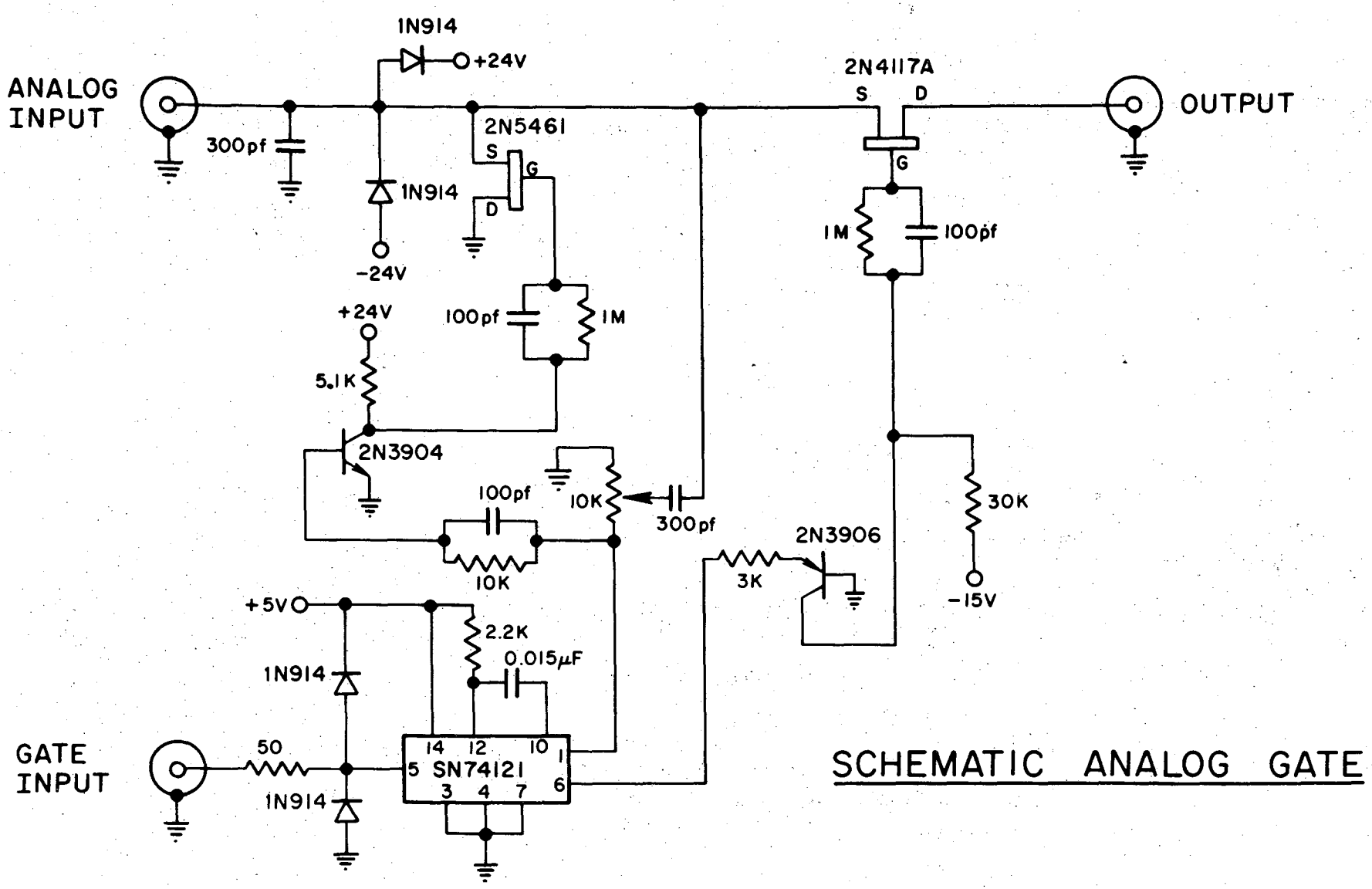

FIGURE 1

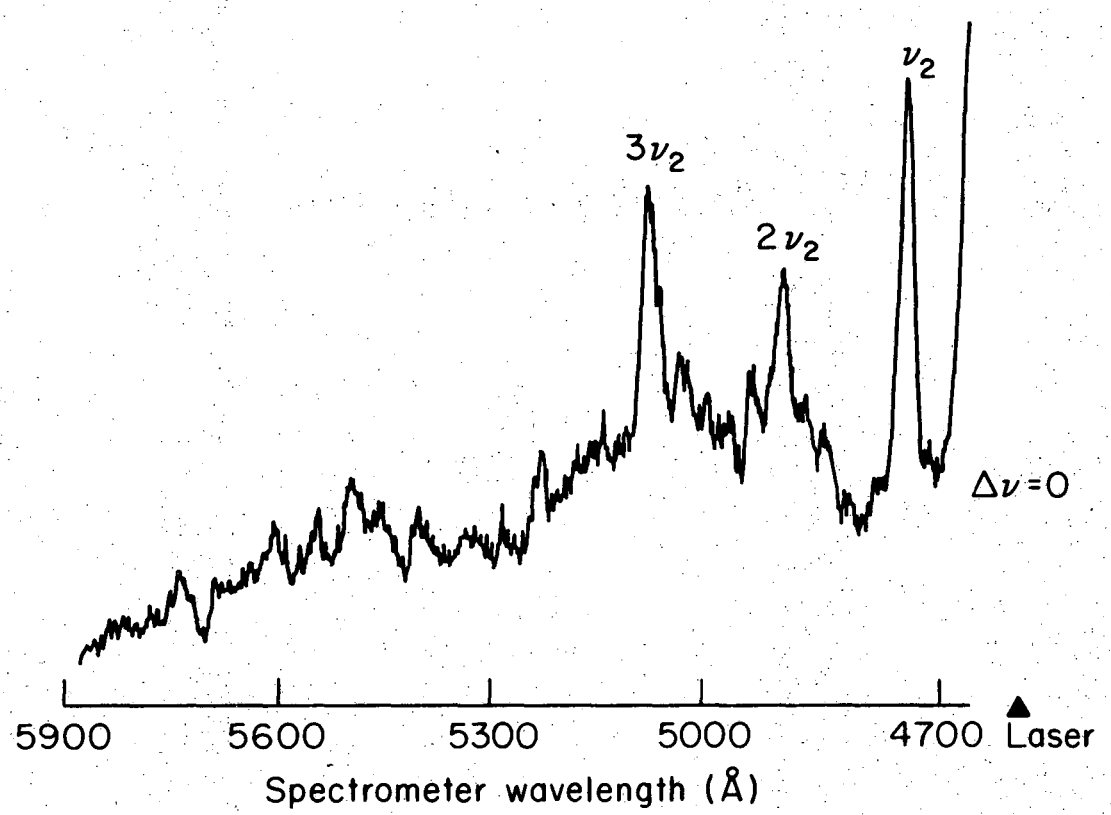

XBL 751-2088

FIGURE 2

0 0 0 0 4 2 0 2 5 4 8

LEGAL NOTICE

This report was prepared as an account of work sponsored by the United States Government. Neither the United States nor the United States Atomic Energy Commission, nor any of their employees, nor any of their contractors, subcontractors, or their employees, makes any warranty, express or implied, or assumes any legal liability or responsibility for the accuracy, completeness or usefulness of any information, apparatus, product or process disclosed, or represents that its use would not infringe privately owned rights.

TECHNICAL INFORMATION DIVISION
LAWRENCE BERKELEY LABORATORY
UNIVERSITY OF CALIFORNIA
BERKELEY, CALIFORNIA 94720