LBL-33407
UC-000

Center for Advanced Materials

CAM

Presented at the 2nd International Symposium on Functionally Gradient Materials (FGM), San Francisco, CA, November 1–4, 1992, and to be published in the Proceedings

A Transient FGM Interlayer Based Approach to Joining Ceramics

A.M. Glaeser, M.L. Shalz, B.J. Dalgleish, and A.P. Tomsia

January 1993

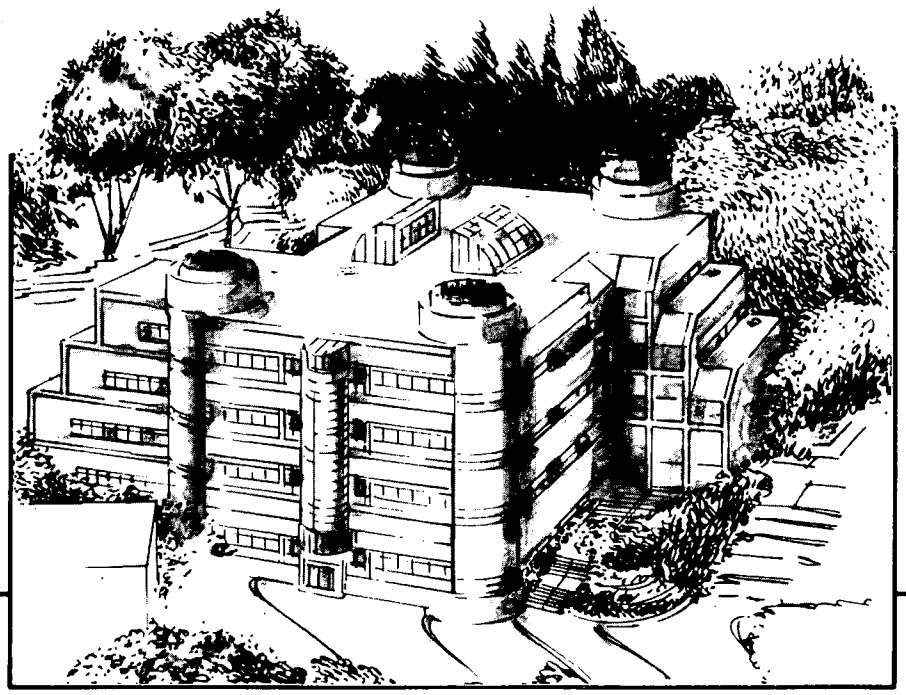

Materials and Chemical Sciences Division

Lawrence Berkeley Laboratory • University of California

ONE CYCLOTRON ROAD, BERKELEY, CA 94720 • (415) 486-4755

Prepared for the U.S. Department of Energy under Contract DE-AC03-76SF00098

LOAN COPY
Circulates
for 4 weeks
Bldg. 50 Library.
LBL-33407
Copy 2

DISCLAIMER

This document was prepared as an account of work sponsored by the United States Government. While this document is believed to contain correct information, neither the United States Government nor any agency thereof, nor the Regents of the University of California, nor any of their employees, makes any warranty, express or implied, or assumes any legal responsibility for the accuracy, completeness, or usefulness of any information, apparatus, product, or process disclosed, or represents that its use would not infringe privately owned rights. Reference herein to any specific commercial product, process, or service by its trade name, trademark, manufacturer, or otherwise, does not necessarily constitute or imply its endorsement, recommendation, or favoring by the United States Government or any agency thereof, or the Regents of the University of California. The views and opinions of authors expressed herein do not necessarily state or reflect those of the United States Government or any agency thereof or the Regents of the University of California.

LBL-33407
UC-000

A Transient FGM Interlayer Based Approach to Joining Ceramics

A.M. Glaeser, M.L. Shalz, B.J. Dalgleish, and A.P. Tomsia

Department of Materials Science and Mineral Engineering
University of California

and

Center for Advanced Materials
Materials Sciences Division
Lawrence Berkeley Laboratory
University of California
Berkeley, California 94720

January 1993

This work was supported by the Lawrence Berkeley Laboratory Director's Exploratory Research and Development Fund of the U.S. Department of Energy under Contract No. DE-AC03-76SF00098.

A TRANSIENT FGM INTERLAYER BASED APPROACH TO JOINING CERAMICS

A. M. Glaeser, M. L. Shalz, B. J. Dalgleish and A. P. Tomsia
Center for Advanced Materials, Lawrence Berkeley Laboratory
and Department of Materials Science and Mineral Engineering
University of California, Berkeley, California 94720

ABSTRACT

In most cases, functionally gradient materials have been designed to produce a desirable property gradient in a material or in a joint region. In this paper, the concept of a transient gradient structure is introduced. The function of the intentional property discontinuities in these multilayer interlayers is to facilitate processing of assemblies and materials combinations that would be difficult to process using conventional bonding approaches. Specifically, the methods make use of a thin or partial layer of a low melting point transient liquid phase to facilitate bonding via brazing, yet produce refractory joints. Several mechanisms for consuming the transient liquid former are outlined, and examples of interlayer designs that exploit these mechanisms are presented. Specific results from experiments joining alumina to alumina via Cu/Pt/Cu, Cu/Ni/Cu, Cu/Nb/Cu and Sn/Nb/Sn interlayers are presented.

INTRODUCTION

With continued fundamental research, impressive improvements in the properties and performance of structural metals, ceramics, intermetallics, and composites have been achieved. These advanced ceramics, ceramic-metal composites, and intermetallics are destined to become the building blocks for complex monomaterial or multimaterial structures exhibiting improved or novel properties and function. The fabrication of large complex structures consisting entirely of ceramics will most likely require the joining of smaller components. If different regions of a larger structure see vastly differing service conditions, a wide range of materials with varying properties may be appropriate or necessary for use in different regions of the assembly. Joining dissimilar materials will be an essential aspect of fabricating such assemblies.

One approach to providing materials for increasingly demanding applications involves more complex structures in which combinations of materials are used to produce an intentional "functional" gradient in material properties [1-3]. These structures, and the property gradients may take several forms. Some structures have, or approach having, property gradients that are "continuous" at a size scale that is of the order of a few particle or grain sizes. Other structures, such as those based upon laminated structures, have sharper but small discontinuities in structure and properties. Coatings can produce a sharp and large discontinuity in some properties. A correspondingly diverse set of processing approaches has been used to fabricate these structures. These include CVD-based methods [*e.g.*, 4], PVD methods [*e.g.*, 5], sintering and infiltration methods [*e.g.*, 6], centrifugal casting [7], galvanoforming [7], lamination techniques [8, 9], SHS-based methods [10], and plasma spraying [11]. In general, the gradients in FGMs are primarily motivated by property considerations, and the processing methods are selected to allow the development of a gradient, or to preserve a gradient established during an earlier stage of processing. Only the SHS and gas-pressure combustion sintering methods [12] exploit a finer-scale built in chemical gradient and chemical driving force to facilitate the processing of a material that would be more difficult or time-consuming to process by more conventional methods.

Some of the FGM structures that are of interest involve coatings, multilayers and laminates; the formation of strong interfaces between dissimilar materials is required. In some cases, the structures of interest could be formed by simply joining dissimilar, fully densified, homogeneous materials *if* a convenient method of producing such joints were available. Our attention has been focused on exploring nonconventional methods of joining that exploit gradient structures to achieve a property advantage, most often a high temperature use capability, but *also* facilitate the processing. Materials and assemblies, regardless of how attractive their properties may be, will be underutilized or overlooked if the processing is too demanding or costly. The methods that are being explored use microdesigned multilayer interlayers that seek to combine the best features of conventional liquid-state and solid-state joining methods. When the methods are applied to joining ceramics to themselves via refractory metal interlayers, ceramic-metal joints with reduced thermal expansion mismatch and capable of use at elevated temperature can be produced at substantially lower temperatures than those required for conventional joining approaches [13-15]. Eventually, some of these joining techniques may find use in the fabrication of materials with more nearly continuous gradients in properties, and initial experiments have shown some promise in this respect [16].

BACKGROUND

Many researchers believe that solid-state diffusion bonding and liquid-based reactive metal brazing are the approaches that are most likely to produce strong joints for demanding high-stress, high-temperature applications. Advocates

of diffusion bonding point to the flexibility of the approach, the potential for maintaining dimensional tolerances, and the ability to produce refractory joints as key advantages. Advocates of brazing cite the greater flexibility in joint configuration, less stringent surface preparation requirements, freedom from the need to apply a load that may distort components, and suitability of the method for mass production as among the relative advantages of a brazing approach. Both methods have the potential to produce strong joints.

As the projected use temperatures and stress levels imposed on materials systems and devices have increased, so too has the difficulty of fabricating reliable joints. A representative illustration of these difficulties is provided in selected references focussing on joining of Si_3N_4 ceramics to themselves via metallic interlayers, or to Ni-based superalloys for use in advanced heat engine applications.

Joining of Si_3N_4 ceramics to themselves for use at elevated temperatures has focused in large part on solid-state diffusion bonding using refractory metal interlayers [17, 18]. The work of Koizumi and coworkers, as well as of other researchers has shown the need for a sufficiently high temperature to achieve a strong bond, and the ultimately deleterious consequences of interfacial reaction product formation when excessively high bonding temperatures are used. A processing temperature window emerges within which plastic flow and creep of the interlayer is sufficient to achieve good ceramic-metal contact, but reaction is not excessive. More generally, studies in numerous systems indicate that an increase in bonding temperature is beneficial, and minimum processing temperatures of 0.5 T_m (the melting temperature in Kelvin) are suggested as a general guideline [19, 20] for diffusion bonding. Often, "optimum" properties are obtained when joining temperatures are 0.8-0.9 T_m [21]. Thus, refractory metal interlayers require high processing temperatures, or high bonding pressures. If the bonding pressure is increased to reduce the bonding temperature, distortion of components can occur.

Additional difficulties and processing constraints emerged in brazing studies [*e.g.*, 22, 23] seeking to develop brazing alloys for joining Si_3N_4 to Ni-based superalloys. To produce an interlayer that will retain excellent mechanical properties at high temperatures, refractory metal interlayers would seem desirable. However, conventional brazing requires the complete melting of the interlayer, and as a result, the brazing temperature must exceed the intended use temperature. As the intended use temperature increases, processing becomes more difficult, and the potential for excessive reaction increases. When joining a ceramic to precipitation hardened alloys, such high processing temperatures would overage the metallic component. Since the desired use temperatures approach the temperature limits of the metal components, one is forced to try to identify an interlayer composition that retains excellent mechanical properties to a very high fraction of a sufficiently low liquidus temperature, and has a narrow melting temperature range.

The severe difficulties that arise when diffusion bonding and brazing are applied to forming joints which will see high ultimate use temperatures is at least in part a consequence of the use of chemically homogeneous interlayers. In an attempt to reduce these difficulties and relax processing constraints, efforts at

Berkeley have focussed on the development and adaptation of nonconventional joining methods to ceramic-ceramic and ceramic-metal joining. These methods rely on inhomogeneous interlayers to allow processing at low temperatures and provide the potential for subsequent high temperature use.

The methods explored build in part upon earlier work involving the use of a transient liquid phase (TLP) for bonding Ni- and Co-based superalloys [24]. In TLP bonding, a melting point depressant, typically boron, is added uniformly to a brazing foil, *e.g.*, Ni. The interlayer melts completely during brazing, however, rapid diffusion of B into the adjoining alloy causes solidification of the interlayer at the bonding temperature. Diffusion of alloying elements from the adjoining superalloy into the bond region reduces the chemical and property discontinuity. The method exploits the ease and other advantages of brazing, and permits the development of refractory joints at joining temperatures (1065-1200°C) that are low relative to T_m for Ni (1453°C). The reduced bonding temperatures avoid overaging of the metal components during joining.

Several researchers have attempted to adapt TLP joining to the bonding of nonoxide ceramics. Loehman and co-workers [25, 26], Baik and Raj [27], and Rowcliffe *et al.* [28, 29] have explored joining of Si_3N_4 using oxynitride glasses with compositions that match those of the intergranular glassy phase. Iseki *et al.* [30, 31] bonded SiC ceramics using Ge interlayers. The SiC used contained excess Si which acted as a host for the less refractory Ge, resulting in the formation of a more refractory Si-Ge alloy in the interlayer region.

The weakness of normal TLP methods is the need for a favorable interaction between the interlayer and the substrate. In the case of Ni-based superalloys, B diffuses into the adjoining material. In the case of Si_3N_4 ceramics, the glassy interlayer redistributes itself and "penetrates" the adjoining material. For SiC, excess Si must be present to absorb the Ge. Thus, interlayers are system specific. More recent work by Iino in Japan [32] and at Berkeley [13-16, 33] has focused on localizing the chemical redistribution and reaction within the interlayer, thereby allowing to a greater extent the development of multipurpose interlayer designs.

Iino joined Si_3N_4 ceramics using multilayer Ti/Ni/Ti interlayers that form a thin or partial layer of a wetting liquid phase at relatively low bonding temperature (1050°C). Relatively high strength bonds were achieved through this use of a multilayer interlayer containing a thin active metal foil (Ti) on a thicker refractory metal foil (Ni). Chemical analysis of the bond region showed substantial redistribution of the Ti, and the formation of a more chemically homogeneous interlayer. This approach was dubbed partial transient liquid phase (PTLP) bonding by Iino. A similar interlayer concept was proposed in the mid-1960's by Bernstein and Bartholomew [34] but applied to much lower temperature joining processes in integrated circuit fabrication.

Parallel and independent efforts at Berkeley have also focused on utilizing microdesigned multilayer interlayers. The interlayers develop a partial layer of a transient liquid phase that facilitates ceramic-ceramic and ceramic-metal joining.

A thin film of a low melting point metal or alloy is deposited onto a much thicker foil of a more refractory metal or alloy (Figure 1). The two metals or alloys are selected such that the more refractory metal incorporates the less refractory component (or consumes it by reaction), and produces a suitably refractory alloy (or reaction product). Ideally, such a method melds the best features of solid-state and liquid-based joining methods. These microdesigned gradient interlayer structures provide internalized, substrate independent, transient liquids that form at low temperatures to facilitate joining with refractory metal-based interlayers. As a result, interlayer and assembly properties and performance capabilities that are difficult or impractical to achieve using conventional joining methods become more accessible. In principle, the low melting temperature phase can also be used to infiltrate a porous ceramic-metal preform, potentially one incorporating a property gradient, thereby providing an alternative to more conventional processing routes for the formation of a broader range of FGM materials [16].

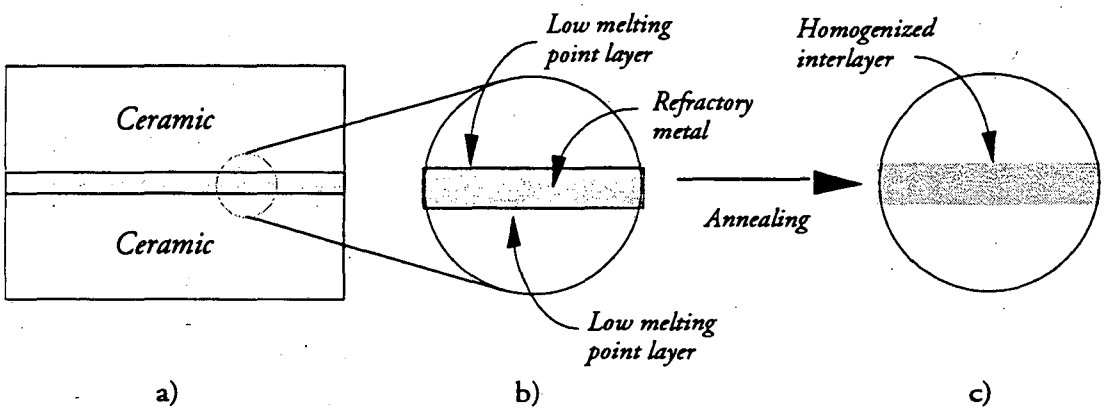

Figure 1 Schematic illustration of a) ceramic/interlayer/ceramic assembly, b) detail of microdesigned interlayer prior to heating, and c) uniform interlayer after bonding and heat treatment.

In the ensuing sections, a brief description of the experimental procedures is provided, three interlayer design strategies that exploit distinct mechanisms for eliminating the transient liquid former are introduced, and results of experiments exploiting three different mechanisms are summarized. The interested reader is referred to references 13-15 for more detailed presentation of the results.

EXPERIMENTAL PROCEDURES

Figure 2 indicates the materials that have been used in joining studies, and illustrates the geometry of the assembly. Al_2O_3 was selected as the ceramic for initial joining studies because of the substantial prior joining research devoted to this oxide, and because of its availability. The majority of the research has focused on joining a 99.5% pure, ≥98% dense Al_2O_3 (Coors, Golden CO). The Al_2O_3

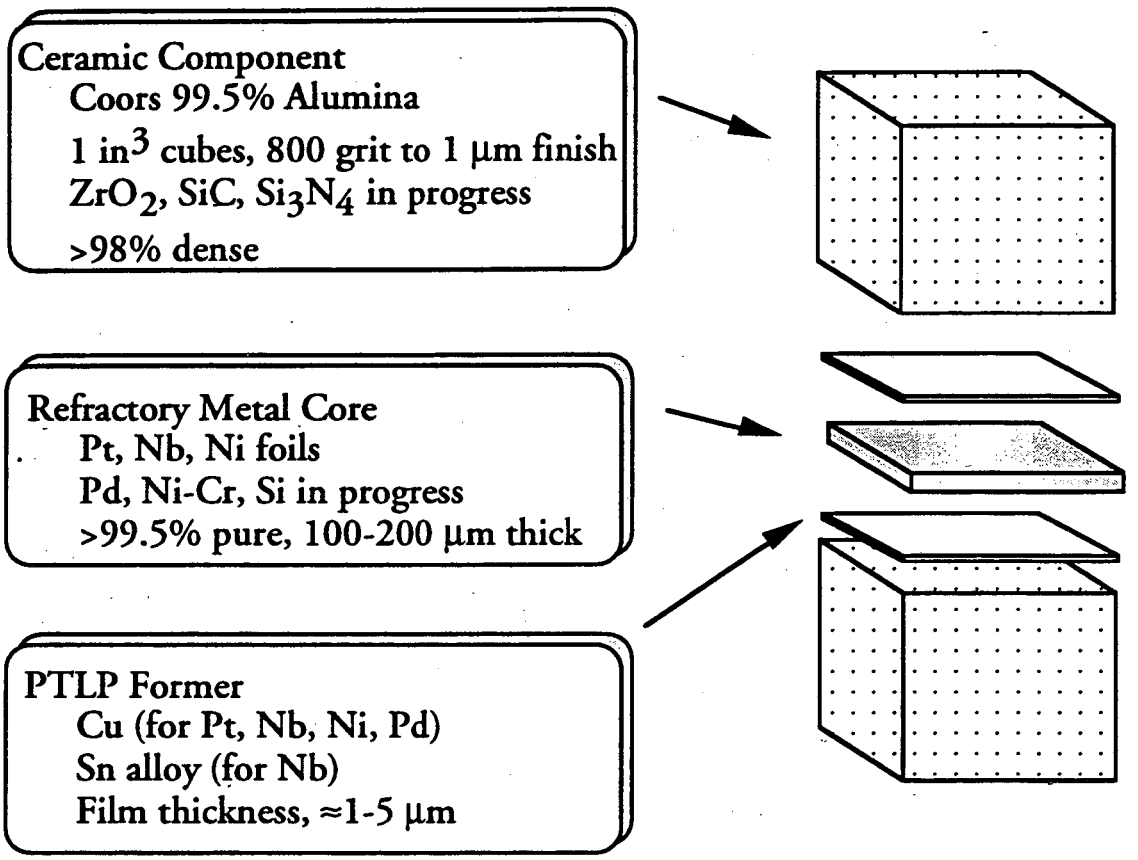

Figure 2 Schematic illustration of sample assembly and of materials studied.

is in the form of 19.5 × 19.5 × 22.5 mm^3 blocks that were machine-polished to a 1 μm finish, cleaned with solvents and then air-annealed to remove organic surface contaminants.

Pt, Ni, and Nb were selected as refractory metals. Pt and Nb match the thermal expansion of Al_2O_3 closely. Ni was selected in part because of its low cost relative to Pt, but also as a starting point for studies involving Ni-Cr and Ni-based superalloys that have good oxidation and corrosion resistance [35]. The Pt, Ni, and Nb foil interlayers (Goodfellow, Malvern PA) were typically cut from 127 μm thick sheets of ≥99.95% pure foils, and cleaned and degreased in solvents.

Cu has been the most common choice for the TLP former because of its relatively low T_m, and its ease of deposition. In addition, considerable prior research on Cu-Al_2O_3 diffusion bonding [36-41] and brazing [42-46] has been performed; fracture of Cu/Al_2O_3 interfaces [37-39, 41-46] has also been investigated. Cu is capable of forming strong bonds with Al_2O_3. In our work, thin Cu films (≈3 μm) were deposited by evaporation of a Cu source under vacuum. For Sn-based transient liquids, thinner (≈1 μm thick) films were deposited, and Ti was added to the TLP layer to improve wetting and adhesion.

The block/foil/block assembly illustrated in Figure 2 was loaded into a graphite die, and bonding was performed in a vacuum hot press. Assemblies were heated in vacuum, typically held at the bonding temperature for several hours (6 h at 1150°C for Cu/Pt/Cu, Cu/Ni/Cu and Cu/Nb/Cu interlayers, and 4 h at 1000°C, 850°C, and 600°C for Sn/Nb/Sn interlayers) then cooled slowly to room temperature. Typically, the vacuum during bonding was $1–2.5 \times 10^{-3}$ Pa. Instrumental limitations made it necessary to maintain a relatively high minimum bonding pressure of ≈5.1 MPa on the assembly during the bonding cycle; later work suggests that significantly lower loads would suffice to induce contact.

Bonded block assemblies were first cut into plates, and then into beams of approximately square cross section (≈3.4 × 3.4 mm) with the metal interlayer at the beam center. Beams were tested at room temperature using four-point bending, with an inner span of 8 mm, and a displacement rate of 0.05 mm/min. Prior to testing, the tensile faces of the beams were polished, and in general, the beams from a given bond were divided into two groups. One group of beams was tested in the as-processed state, while the other group was annealed at elevated temperature prior to room temperature testing. For Cu/Pt/Cu and Cu/Ni/Cu, samples were annealed for 10 h at 1000°C in either air or gettered argon. For Cu/Nb/Cu, samples were annealed for 10 h at 1000°C in gettered argon. For Sn/Nb/Sn, samples were annealed for 8 h at 1500°C in gettered argon. Prior work had determined that four-point bend strengths of (unbonded) alumina beams prepared from the same source material and tested under the same conditions are of the order of 290 MPa, and thus, this defines an upper limit for the joint strength.

Cross sections and fracture surface microstructures were examined using SEM, and the chemistry of the interlayer region and fracture surfaces was evaluated using energy dispersive spectroscopy (EDS). Microprobe scans were also conducted on selected samples, and generally confirmed the EDS results.

RESULTS AND DISCUSSION:

Complete Solid Solution-Interlayer Systems: Cu/Pt/Cu, Cu/Ni/Cu

The simplest interlayer design uses components that form complete solid solutions. At the bonding temperature, the liquid phase disappears due to diffusion of the low melting point component into the more refractory metal. In the absence of reactions with the ceramic, the equilibrium state for the interlayer is a solid solution with an overall composition reflecting the interlayer design. The interlayer evolution follows the path illustrated schematically in Figure 1. The systems Cu-Pt and Cu-Ni were evaluated as examples of systems which exhibit complete mutual solid solution at elevated temperature. The significant difference between T_m of Cu (1085°C) and T_m of Pt (1769°C) and Ni (1453°C) allows a substantial decrease in the processing temperature relative to those required for diffusion bonding or brazing with pure Pt and pure Ni interlayers. Moreover, the wetting characteristics of pure Pt [21] and pure Ni [47, 48] on Al_2O_3 are not conducive to the formation of strong joints by brazing.

The fracture strength distributions for the Cu/Pt/Cu- and Cu/Ni/Cu-bonded assemblies are presented in Figures 3a and 3b, respectively. For both systems, the strengths of as-processed beams approach the four-point bend strengths of (unbonded) alumina beams prepared from the same source material and tested under the same conditions (290 MPa). Instances of ceramic failure were observed. The highest strengths are comparable to those obtained for assemblies diffusion bonded at substantially higher temperature, and demonstrate the *potential* for achieving high joint strengths using TLP-based joining methods. Work addressing the suspected causes of the scatter in strength is planned, and we are confident that the spread in strength values can be decreased, and average strength values increased.

EDS characterization of as-bonded Cu/Pt/Cu interlayer bonded assemblies shows that substantial homogenization has occurred [13], with a *maximum* Cu concentration of the order of ≈6-9 at % near the interlayer/alumina interface, decreasing to ≈1 at % at the midplane of the interlayer (a depth of ≈65 μm). Since the interlayer is Pt-rich, and substantially homogenized, the thermal properties of the interlayer are expected to approach those of pure Pt interlayers. Measurements of strength versus temperature for Al_2O_3/Pt/Al_2O_3 diffusion bonded assemblies by Borbidge and coworkers indicate that ≈75% of the room temperature strength can be retained to temperatures up to 1200°C [21, 49].

The potential for microstructural and microchemical changes during high temperature exposure is an interesting aspect of this bonding method, and the most dramatic effects were observed for the Cu/Pt/Cu bonded assemblies. Significant differences were observed in the room temperature strengths of samples annealed for 10 h at 1000°C in air and gettered argon (see Figure 3a). Air annealing appeared to have a beneficial effect on strength. Microstructural and microchemical characterization of the fracture surfaces suggest that in the case of air-annealing of Cu/Pt interlayer bonded Al_2O_3, a binary Al-Cu oxide (either $CuAlO_2$ or $CuAl_2O_4$) forms at the interface. The higher strengths of air-annealed samples would be consistent with the view that an increase in the oxygen content, possibly coupled with the formation of a thin reaction layer, promotes the formation of a "stronger" ceramic/metal bond [32]. In contrast, after annealing in argon, all four beams failed along the interface during routine handling prior to testing. Stresses imposed during handling must be below ≈60 MPa since beams with flexure strengths this low have survived similar handling steps. Thus, a substantial weakening due to annealing in argon is indicated. The loss of strength appears to be the result of solid-state "dewetting" of the ceramic by the metal interlayer. Similar morphologies have been observed to develop in copper thin films on sapphire substrates during annealing under nonoxidizing conditions [50].

On-going research is exploring other interlayer chemistries (*e.g.*, Cu/Pd/Cu, Au/Pd/Au, Au/Ni/Au, Ni/Pd/Ni) for joining alumina, and the extension of the method to other oxides such as ZrO_2. It is possible that microdesigned Ge/Si/Ge interlayers may allow the joining method for reaction bonded SiC developed by Iseki *et al.* to be extended to joining of SiC ceramics without excess Si. Experiments assessing this possibility are in progress.

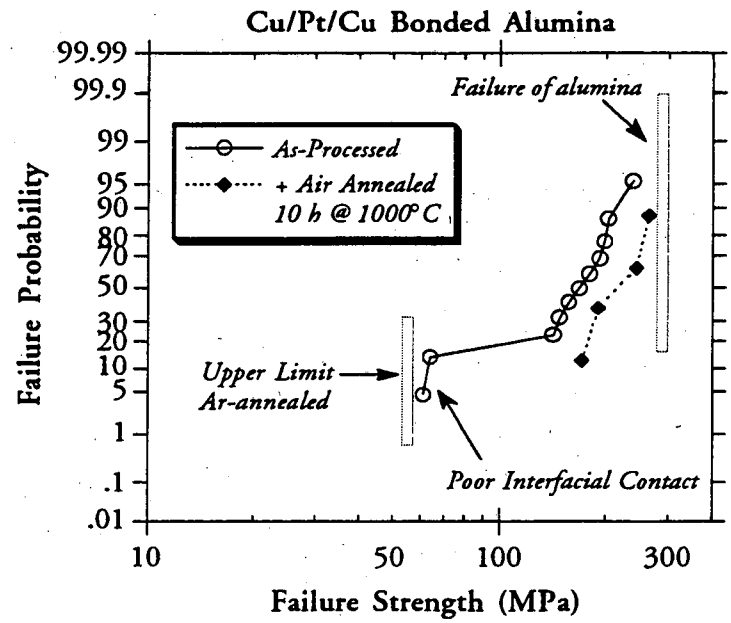

a)

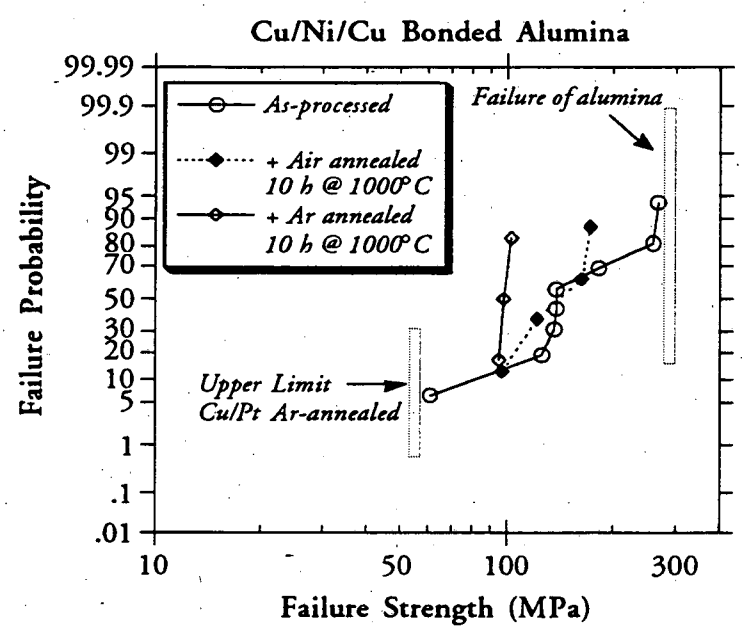

b)

Figure 3 Failure probability versus strength plots for a) Cu/Pt/Cu and b) Cu/Ni/Cu bonded assemblies.

TLP-Ceramic Reaction Systems: Cu/Nb/Cu

In some cases it is possible to select a TLP former and processing conditions that will promote a reaction between the TLP and the *substrate* that forms a more refractory binary oxide. Studies using Cu/Nb/Cu interlayers for bonding Al_2O_3 appear to fall into this category [14]. The extensive literature [*e.g.*, 51-68] on Nb/Al_2O_3 diffusion bonding and Nb/Al_2O_3 interfaces made this an attractive system for study. Measurements of strength versus temperature have been conducted, and it has been suggested that Nb-bonded Al_2O_3 assemblies could be useful to temperatures as high as 1500°C in nonoxidizing atmospheres [51].

Cu and Nb form no intermediate phases [69]. At the joining temperature (1150°C), the liquid in equilibrium with Cu-saturated Nb contains 1-2 at % of Nb [69]. Recent experiments indicate that Nb has a beneficial effect on the wetting behavior of Cu on Al_2O_3 [70]. The maximum solubility of Cu in Nb is low (≈1.2 at % at 1080°C) [69]. One expects that the rate of diffusion of Cu into Nb will also be low. This is expected to result in the formation of a relatively Cu-rich liquid film sandwiched between the Al_2O_3 substrate and the Nb foil. The form of the phase diagram suggests that the activities of both Nb and Cu in the TLP will be relatively high. The high activities will increase the likelihood of reaction. In addition, the liquid phase provides a rapid transport path for curvature or pressure-induced diffusion of Nb.

The fracture strength distribution for the Cu/Nb/Cu bonded assemblies is illustrated in Figure 4. In comparison to Cu/Pt/Cu and Cu/Ni/Cu interlayer bonded assemblies, the average strength is higher, and the spread in strength is reduced. The beneficial effect of Nb on the wetting of Cu on Al_2O_3 (an ≈20-30° decrease in contact angle relative to pure Cu) may be an important factor. The possibility that precoating of substrates with a reactive metal may improve the degree of contact between the transient liquid and the substrate, and thereby promote a more favorable strength distribution is being investigated.

Analysis of fracture surfaces suggests that Cu is consumed by the formation of a Cu-Al-O phase at the interface. The precipitate appears to bond strongly to both the alumina and the Nb, and bridges the interface. In addition, regions of direct contact and strong direct bonding between Al_2O_3 and Nb are formed. In contrast to Cu/Pt/Cu, annealing in argon appears to have no deleterious effect on strength.

Future work is focusing on modifying the chemistry of the interlayer to produce a more refractory reaction product. The Cu-Al-O phases are only marginally more refractory than Cu, and this will most likely limit the temperature capabilities of these bonds. One undesirable aspect of this specific joining approach is that the interlayers are substrate-specific.

TLP-Refractory Metal Reaction Systems: Sn/Nb/Nb

One of many additional mechanisms for forming a joint at low temperature involves choosing a TLP-refractory metal pair such that the TLP former is consumed by the formation of a thin layer or discrete precipitates of a

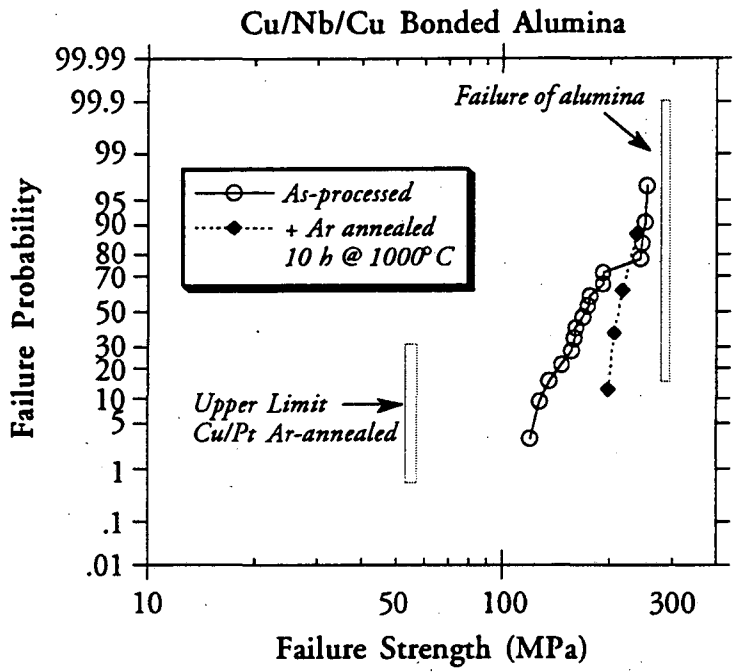

Figure 4 Strength distribution for Cu/Nb/Cu bonded assemblies

refractory intermetallic phase. Depending upon the solubility of the low melting point component in the refractory metal core, and the relative thickness of the TLP and refractory metal layers, this reaction may be the first step in the evolution of the interlayer, or it may be a terminal condition.

The earliest efforts at Berkeley to exploit transient liquids focused on the use of Sn-based and Al transient liquids in conjunction with Nb as a refractory metal core. For the Sn-based joining experiments, the best results were obtained using a joining temperature of 1000°C. As-processed beams exhibited flexure strengths of the order of 100 MPa, with failure occurring along the interface. Following an 8 h anneal at 1500°C somewhat lower room temperature strengths, ≈70 MPa, were observed. Although these strength values are lower than those obtained in other studies, the degree of contact at the interface was also lower, and improvements in surface preparation could improve these values significantly.

Although studies based on this approach have been limited, there are a large number of systems that based upon their phase diagram may be useful for producing refractory joints. The Ni-Al system is an attractive possibility. For systems such as the Ni-Al system, in which multiple intermetallic phases can form, the details of the phase formation sequence are important. Both the Nb-Sn and Nb-Al phase diagrams show three intermetallic phases. However, Sn/Nb/Sn based interlayers produced successful joints, whereas initial results indicate that the Al/Nb/Al system is not conducive to the formation of strong joints.

SUMMARY AND CONCLUSIONS

The use of multilayer interlayers with intentional discontinuities in chemistry and properties is introduced. These discontinuities are designed to facilitate the joining of similar and dissimilar materials, and to disappear or otherwise evolve during joining processes. The microdesigned interlayers allow low-temperature fabrication of refractory joints.

Experiments focussing on joining alumina to itself via refractory metal based interlayers have shown the potential to reduce joining temperatures relative to those required for more conventional joining methods. For some of the systems investigated, the processing temperature reductions are of the order of several hundred degrees. Similar processing temperature reductions may facilitate joining of more reactive ceramics such as Si_3N_4, and joining operations involving temperature-sensitive metallic components. The ability to reduce joining temperatures may also be useful in fabricating materials that incorporate chemical and property gradients. For example, new strategies for forming laminated structures by joining may emerge.

There remain a great number of alternatives and extensions to the TLP consumption mechanisms that have been outlined in this paper. Thus, there are numerous additional opportunities to use chemical driving forces and chemical reactions to great advantage during joining, and microengineer interlayer microstructures and microchemistries. With further research, the use of transient liquids and an array of consumption mechanisms to produce structures that incorporate functional gradients may expand and become more widespread. Facilitating the processing of FGMs may allow more extensive use of these novel materials.

ACKNOWLEDGMENTS

This work was supported by the Director's Exploratory Research and Development Fund of LBL under Contract No. DE-AC03-76SF00098. Special thanks are due to the Alcoa Foundation for providing the financial resources that allowed the first demonstration of this concept. Additional unrestricted grants from and equipment donations by ARCO, IBM, and DuPont contributed to the development of facilities used in this research. Helpful discussions and correspondences with R. M. Cannon, Y. Iino, M. Koizumi, M. Nicholas, J. A. Pask, and R. Ritchie are acknowledged.

REFERENCES

1. PROCEEDINGS OF THE FIRST INTERNATIONAL SYMPOSIUM ON FUNCTIONALLY GRADIENT MATERIALS, edited by M. Yamanouchi, M. Koizumi, T. Kirai and I. Shiota, Functionally Gradient Materials Forum, The Society of Non-Traditional Technology, Tokyo, Japan (1990).
2. W. Bunk, "Advanced Aerospace Materials," pp. 1-2 in Ref. 1.
3. M. Koizumi, "Challenging to the Inhomogeneous Materials Production - Status and Aspects," pp. 3-4 in Ref. 1.
4. M. Sasaki and T. Hirai, "Fabrication and Thermal Barrier Characteristics of CVD SiC/C Functionally Gradient Materials," pp. 83-88 in Ref. 1.
5. K. Fritscher and W. Bunk, "Density-Graded TBCs Processed by EB-PVD," pp. 91-96 in Ref. 1.
6. M. Takahashi, Y. Itoh and H. Kashiwaya, "Fabrication and Evaluation of W/Cu Gradient Material by Sintering and Infiltration Technique," pp. 129-134 in Ref. 1.
7. B. Ilschner, "Gradient Materials by Powder Metallurgy and by Galvanoforming," pp. 101-106 in Ref. 1.
8. M. Takemuma, A. Yoshitake, H. Hayakawa, T. Hyakubu and M. Tamura, "Mechanical and Thermal Properties of FGM Fabricated by Thin Film Lamination Method," pp 97-100 in Ref. 1.
9. Y. Miyamoto, T. Takakura, K. Tanihata, I. Tanaka, O. Yamada, M. Saito and H. Takahashi, "Processing Study for TiB_2-Ni FGM by Gas-Pressure Combustion Sintering," pp. 169-173 in Ref. 1.
10. N. Yanagisawa, N. Sata and N. Sanada, "Fabrication of TiB_2-Cu Functionally Gradient Material by SHS Process," pp. 179-184 in Ref. 1.
11. D. Steffens, M. Dvorak and M. Wewei, "Plasma Sprayed Functionally Gradient Materials - Processing and Applications," pp. 139-143 in Ref. 1.
12. Y. Miyamoto, H. Nakanishi, I. Tanaka, T. Okamoto and O. Yamada, "Gas-Pressure Combustion Sintering of TiC-Ni FGM," pp. 257-262 in Ref. 1.
13. M. L. Shalz, B. J. Dalgleish, A. P. Tomsia and A. M. Glaeser, "Ceramic Joining; I. Partial Transient Liquid Phase Bonding of Alumina *via* Cu/Pt Interlayers," *in press, Journal of Materials Science.*
14. M. L. Shalz, B. J. Dalgleish, A. P. Tomsia and A. M. Glaeser, "Ceramic Joining; II. Bonding of Alumina via Microdesigned Cu-Nb Interlayers," *submitted to Journal of Materials Science.*
15. M. L. Shalz, B. J. Dalgleish, A. P. Tomsia and A. M. Glaeser, "New Approaches to Joining Ceramics For High-Temperature Applications," *to appear in Structural Ceramics Joining II, edited by A. J. Moorhead, American Ceramics Society;* LBL Report #33406.
16. B. J. Dalgleish and A. M. Glaeser, unpublished research, 1992.

17. M. Koizumi, M. Takagi, K. Suganuma, Y. Miyamoto and T. Okamoto, "Solid-State Bonding of Silicon Nitride to Metals Using HIP," in HIGH TECH CERAMICS, P. Vincenzini, Ed., Elsevier Science Publishers B.V., Amsterdam (1987); pp. 1033-42.

18. K. Suganuma, T. Okamoto, Y. Miyamoto, M. Shimada, and M. Koizumi, "Joining Si_3N_4 to 405 Steel with Soft Metal Interlayers," *Mater. Sci. and Tech.*, 2, 1156-1161, (1986).

19. B. Derby, "Diffusion bonding," pp. 94-112 in JOINING OF CERAMICS, M. Nicholas, Ed., Chapman and Hall, London (1990)

20. K. Suganuma, Y. Miyamoto and M. Koizumi, "Joining of Ceramics and Metals," *Ann. Rev. Mater. Sci.*, 18, 47-73, (1988).

21. R. V. Allen and W. E. Borbidge, "Solid-state metal-ceramic bonding of platinum to alumina," *J. Mater. Sci.*, 18, [9], 2835-43 (1983).

22. S. Kang, "Analytical and Experimental Evaluation of Joining Silicon Nitride to Metal and Silicon Carbide to Metal for Advanced Heat Engine Applications," pp. 237-52 in CERAMIC TECHNOLOGY FOR ADVANCED HEAT ENGINES PROJECT, SEMIANNUAL PROGRESS REPORT FOR OCTOBER 1990 THROUGH MARCH 1991, ORNL/TM-11859, July, 1991.

23. M. L. Santella, "Joining of Ceramics for Heat Engine Applications," pp. 232-36 in CERAMIC TECHNOLOGY FOR ADVANCED HEAT ENGINES PROJECT, SEMIANNUAL PROGRESS REPORT FOR OCTOBER 1990 THROUGH MARCH 1991, ORNL/TM-11859, July, 1991.

24. D. S. Duvall, W. A. Owczarski and D. F. Paulonis, "TLP Bonding: a New Method for Joining Heat Resistant Alloys," *Welding Journal*, 53, [4], 203-14 (1974).

25. R. E. Loehman, "Transient Liquid Phase Bonding of Silicon Nitride Ceramics," in SURFACES AND INTERFACES IN CERAMIC AND CERAMIC-METAL SYSTEMS, J. A. Pask and A. G. Evans, Eds, Plenum Press, New York, New York, (1981); pp. 701-11.

26. M. L. Mecartney, R. Sinclair and R. E. Loehman, "Silicon Nitride Joining," *J. Am. Ceram. Soc.*, 68, [9], 472-78, (1985).

27. S. Baik and R. Raj, "Liquid-Phase Bonding of Silicon Nitride Ceramics," *J. Am. Ceram. Soc.*, 70, [5], C105-107, (1987).

28. R. D. Brittain, S. M. Johnson, R. H. Lamoreaux, and D. J. Rowcliffe, "High-Temperature Chemical Phenomena Affecting Silicon Nitride Joints," *J. Am. Ceram. Soc.*, 67, [8], 522-26, (1984).

29. S. M. Johnson and D. J. Rowcliffe, "Mechanical Properties of Joined Silicon Nitride," *J. Am. Ceram. Soc.*, 68, [9], 468-72, (1985).

30. T. Iseki, K. Yamashita and H. Suzuki, "Joining of Self-Bonded Silicon Carbide by Germanium Metal," *J. Am. Ceram. Soc.*, 64, [1], C-13–C-14 (1981).

31. T. Iseki, K. Yamashita and H. Suzuki, "Joining of Self-Bonded Silicon Carbide by Ge Metal," *Proc. Brit. Ceram. Soc.*, **31**, 1-8 (1981).
32. Y. Iino, "Partial transient liquid-phase metals layer technique of ceramic-metal bonding," *J. Mater. Sci. Lett.*, **10**, [2], 104-106 (1991).
33. A. M. Glaeser, unpublished research (1989).
34. L. Bernstein and H. Bartholomew, "Applications of Solid-Liquid Interdiffusion (SLID) Bonding in Integrated-Circuit Fabrication," *Trans. AIME*, **236**, [3], 405-12 (1966).
35. B. J. Dalgleish, M. L. Shalz, A. P. Tomsia and A. M. Glaeser, "Ceramic Joining; III. Partial Transient Liquid Phase Bonding of Alumina *via* Cu/Ni and Cu/80Ni20Cr Interlayers," *in preparation.*
36. C. A. M. Mulder and J. T. Klomp, "On the internal structure of Cu- and Pt-Sapphire Interfaces," *J. de Physique*, **46**, C4-111–C4-133 (1985).
37. J. Klomp, "Solid-State Bonding of Metals to Ceramics," in SCIENCE OF CERAMICS, Vol. 5, edited by C. Brosset and E. Knopp, The Swedish Institute for Silicate Research, (1970); pp. 501-22.
38. Von W. Dawihl and E. Klingler, "Mechanische und Thermische Eigenschaften von Schweissverbindungen des Al_2O_3 mit Metallen," *Ber. Deutch. Keram. Gesell.*, **46**, [1], 12-18 (1969).
39. G. Heidt and G. Heimke, "Kinetik und Mechanismus der Haftfestigkeit bei lotfreien Metall-Keramik-Verbindungen," *Ber. Deutch. Keram. Gesell.*, **50**, [9], 303-07 (1973).
40. G. Heidt and G. Heimke, "A study of the nature of solderless metal-ceramic bonds by reflectivity measurements," *J. Mater. Sci.*,**10**, [5], 887-85 (1975).
41. R. M. Crispin and M. G. Nicholas, "Alumina-Copper Diffusion Bonding," *Ceram. Eng. Sci. Proc.*, **10**, [11-12], 1575-81 (1989).
42. C. Beraud, M. Courbiere, C. Esnouf, D. Juve and D. Treheux, "Study of Copper-Alumina Bonding," *J. Mater. Sci.*, **24**, [12], 4545-54 (1989).
43. M. Nicholas, R. R. D. Forgan and D. M. Poole, "The Adhesion of Metal/Alumina Interfaces," *J. Mater. Sci.*, **3**, [1], 9-14 (1968).
44. M. Wittmer, C. R. Boer, P. Gudmundson and J. Carlsson, "Mechanical Properties of Liquid-Phase Bonded Copper-Ceramic Substrates," *J. Am. Ceram. Soc.*, **65**, [3], 149-53 (1982).
45. Y. Yoshino, "Role of Oxygen in Bonding Copper to Alumina," *J. Am. Ceram. Soc.*, **72**, [8], 1322-27 (1989).
46. S. T. Kim and C. H. Kim, "Interfacial Reaction Product and Its Effect on the Strength of Copper to Alumina Eutectic Bonding," *J. Mater. Sci.*, **27**, [8], 2061-66 (1992).
47. J. E. Ritter and M. S. Burton, "Adherence and Wettability of Nickel, Nickel-Titanium Alloys, and Nickel-Chromium Alloys to Sapphire," *Trans. A.I.M.E.*, **239**, [1], 21-26 (1967).

48. R. M. Crispin and M. Nicholas, "The wetting and bonding behavior of some nickel alloy-alumina systems," *J. Mater. Sci.*, 11, [1], 17-21 (1976).

49. F. P. Bailey and W. E. Borbidge, "Solid-State Metal-Ceramic Reaction Bonding," in SURFACES AND INTERFACES IN CERAMIC AND CERAMIC-METAL SYSTEMS, (Materials Research, 14), J. A. Pask and A. G. Evans, Eds., Plenum Press, New York, (1981); pp. 525-33.

50. C. M. Kennefick and R. Raj, "Copper on Sapphire: Stability of Thin Films at 0.7 T_m," *Acta Metall.*, 37, [11], 2947-52 (1989).

51. G. Elssner and G. Petzow, "Verträglischkeit zwischen Materialkomponenten in Metall-Keramik-Verbundwerkstoffen," *Z. Metallkde.*, 64, [4], 280-86, (1973).

52. G. Elssner, S. Riedel, and R. Pabst, "Fractography and Fracture Paths in Ceramic-Metal Composites," *Praktische Metallographie*, 12, 234-43 (1975).

53. M. Turwitt, G. Elssner and G. Petzow, "Manufacturing and Mechanical Properties of Interfaces Between Sapphire and Niobium," *J. de Physique*, 46, C4-123–C4-127 (1985).

54. A. G. Evans, M. Rühle and M. Turwitt, "On the Mechanics of Failure in Ceramic/Metal Bonded Systems," *J. de Physique*, 46, C4-613–C4-626 (1985).

55. H. F. Fischmeister, W. Mader, B. Gibbesch and G. Elssner, "Preparation, Properties and Structure of Metal/Oxide Interfaces," pp. 529-40 in INTERFACIAL STRUCTURES, PROPERTIES AND DESIGN, edited by M. H. Yoo, W. A. T. Clark, and C. L. Braint (*Mater. Res. Soc. Proc.*, 122, Pittsburgh, PA 1988).

56. S. Morozumi, M. Kikuchi, and T. Nishino, "Bonding Mechanisms Between Alumina and Niobium," *J. Mater. Sci.*, 16, [8], 2137-44, (1981).

57. M. Florjancic, W. Mader, M. Rühle, and M. Turwitt, "HREM and Diffraction Studies of an Al_2O_3/Nb Interface," *J. de Physique*, 46, C4-129–C4-133 (1985).

58. M. Rühle, K. Burger and W. Mader, "Structure and chemistry of grain boundaries in ceramics and of Metal/Ceramic Interfaces," *J. Micros. Spectrosc. Electron.*, 11, 163-177 (1986).

59. K. Burger, W. Mader, and M. Rühle, "Structure, Chemistry, and Diffusion Bonding of Metal/Ceramic Interfaces," *Ultramicroscopy*, 22, [1], 1-14 (1987).

60. M. Rühle, M. Backhaus-Ricoult, K. Burger and W. Mader, "Diffusion Bonding of Metal/Ceramic Interfaces - A Model Study at the Nb/Al_2O_3 Interfaces," pp. 295-305 in CERAMIC MICROSTRUCTURES 86," J. A. Pask and A. G. Evans, Eds., Plenum Press, New York, (1987).

61. Y. Ishida, H. Ichinose, J. Wang and T. Suga, "HREM of Carbon/Metal and Ceramic/Metal Interfaces in Composite Materials," pp. 728-9 in PROC. 46TH ANNUAL MEETING OF EMSA, G. W. Bailey, Ed., San Francisco Press, San Francisco, CA (1988).

62. B. Gibbesch, G. Elssner, W. Mader and H. Fischmeister, "Ultrahigh Vacuum Diffusion Bonding of Metals to Ceramics," *Ceram. Eng. Sci. Proc.*, **10**, [11-12], 1503-14 (1989).

63. F. S. Ohuchi, "Surface science studies of Nb-(0001) Al_2O_3 interfacial reactions," *J. Mater. Sci. Letters*, **8**, [12], 1427-29 (1989).

64. K. Burger and M. Rühle, "Material Transport Mechanisms During the Diffusion Bonding of Niobium to Al_2O_3," *Ceram. Eng. Sci. Proc.*, **10**, [11-12], 1549-66 (1989).

65. M. Kuwabara, J. C. H. Spence and M. Rühle, "On the atomic structure of the Nb/Al_2O_3 interface and the growth of Al_2O_3 particles," *J. Mater. Res.*, **4**, [4], 972-77 (1989).

66. K. Burger and M. Rühle, "Material transport mechanisms during diffusion bonding of Nb to Al_2O_3," *Ultramicroscopy*, **29**, [1-4], 88-97 (1989).

67. W. Mader and M. Rühle, "Electron microscopy studies of defects at diffusion-bonded Nb/Al_2O_3 interfaces," *Acta Metall.*, **37**, [3], 853-66 (1989).

68. J. Mayer, C. P. Flynn and M. Rühle, "High resolution electron microscopy studies of Nb/Al_2O_3 interfaces," *Ultramicroscopy*, **33**, [1], 51-61 (1990).

69. T.B. Massalski, ed., BINARY ALLOY PHASE DIAGRAMS, Vol. 1-3, ASM International, Metals Park, OH (1990).

70. K. Nakashima, A. P. Tomsia and A. M. Glaeser, unpublished research (1992).

LAWRENCE BERKELEY LABORATORY
CENTER FOR ADVANCED MATERIALS
1 CYCLOTRON ROAD
BERKELEY, CALIFORNIA 94720